NEW YORK STATE OF OPPORTUNITY. Parks, Recreation and Historic Preservation

Governor's Office of Storm Recovery

Living with the BAY

BID PACKAGE 3: PROPOSED ENVIRONMENTAL EDUCATION AND RESILIENCY CENTER

REGIONAL MAP

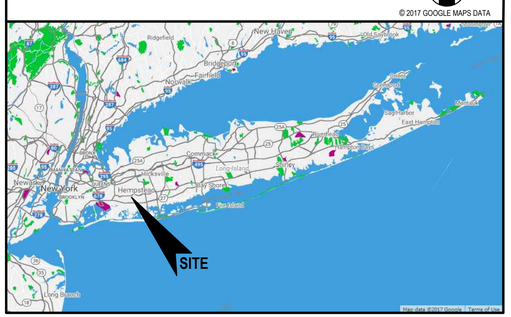

HEMPSTEAD LAKE STATE PARK

NEW YORK STATE
OFFICE OF PARKS, RECREATION, AND HISTORIC PRESERVATION
LONG ISLAND REGIONAL OFFICE

SITE DEVELOPMENT 90% SUBMISSION
SEPTEMBER 2017

LOCATION MAP
SCALE 1" = 3,000'±

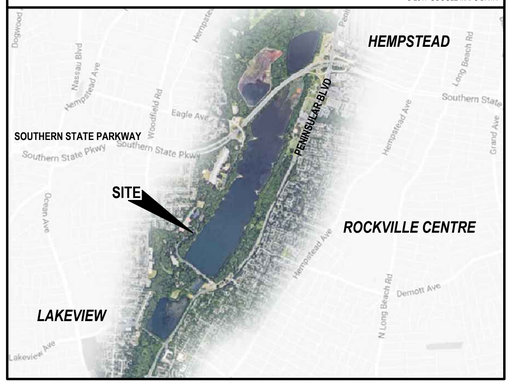

DRAWING LIST

INFORMATIONAL DRAWINGS	
DWG NO.	DRAWING TITLE
G-0.0	COVER SHEET
G-1.0	ABBREVIATIONS. SYMBOLS AND PARTITION TYPES
G-2.0	NEW YORK STATE CODE ANALYSIS
CIVIL DRAWINGS	
DWG NO.	DRAWING TITLE
DSP-1.0	SITE PLAN
DSP-1.1	GRADING & DRAINAGE PLAN
DSP-1.2	PLANTING PLAN
DSP-1.3	CROSS SECTIONS
DSP-1.4	WATER AND SANITARY PLANS
DSP-1.5	ELECTRICAL PLAN
SD-1.0	SITE DETAILS
SD-2.0	SITE DETAILS
SD-3.0	SITE DETAILS
SD-4.0	SITE DETAILS

DRAWING LIST

ARCHITECTURAL DRAWINGS	
DWG NO.	DRAWING TITLE
A-1.0	BASEMENT FLOOR PLAN
A-1.1	FIRST FLOOR PLAN
A-2.0	ROOF PLAN AND NOTES
A-3.0	BASEMENT REFLECTED CEILING PLAN
A-3.1	FIRST FLOOR REFLECTED CEILING PLAN
A-4.0	BUILDING ELEVATIONS
A-4.1	BUILDING ELEVATIONS
A-5.0	BUILDING SECTIONS
A-5.1	BUILDING SECTIONS
A-5.2	BUILDING SECTIONS AND DETAILS
A-6.0	DETAILS
A-6.1	DETAILS
A-7.0	ENLARGED STAIR PLANS, SECTION AND DETAILS
A-7.1	EXTERIOR STAIR PLAN, SECTION AND TYP. NOTES
A-8.0	ENLARGED BATHROOM PLAN, AND DETAILS
A-8.1	BATHROOM ELEVATIONS
A-9.0	ENLARGED CABINETRY PLANS, ELEVATIONS, SECTIONS DETAILS AND SCHEDULE
A-10.0	DOOR SCHEDULE AND DETAILS
A-11.0	WINDOW ELEVATIONS AND NOTES
A-11.1	WINDOW DETAILS
A-12.0	FINISH SCHEDULE AND DETAILS

DRAWING LIST

STRUCTURAL DRAWINGS	
DWG NO.	DRAWING TITLE
S-1.0	FOUNDATION PLAN AND DESIGN LOADS
S-2.0	BASEMENT SLAB PLAN
S-3.0	FIRST FLOOR FRAMING PLAN
S-4.0	ROOF FRAMING PLAN
S-5.0	COLUMN SCHEDULE AND DETAILS
S-6.0	DETAILS
S-7.0	DETAILS
S-8.0	DETAILS
MECHANICAL DRAWINGS	
DWG NO.	DRAWING TITLE
M-0.1	MECHANICAL LEGEND AND SCHEDULES
M-1.0	MECHANICAL BASEMENT PLAN
M-1.1	MECHANICAL FIRST FLOOR PLAN
M-3.0	MECHANICAL DETAILS
M-3.1	MECHANICAL DETAILS
PLUMBING DRAWINGS	
DWG NO.	DRAWING TITLE
P-0.1	LEGEND AND SCHEDULES
P-1.0	DOMESTIC PLUMBING BASEMENT PLAN
P-1.1	DOMESTIC PLUMBING FIRST FLOOR PLAN
P-2.0	SANITARY BASEMENT PLAN
P-2.1	SANITARY PLUMBING FIRST FLOOR PLAN
P-3.0	PLUMBING DETAILS
P-3.1	DOMESTIC PLUMBING RISER
P-3.2	SANITARY PLUMBING RISER

DRAWING LIST

ELECTRICAL DRAWINGS	
DWG NO.	DRAWING TITLE
E-0.0	ELECTRICAL PLAN, LEGEND & DETAILS
E-1.0	ELECTRICAL SINGLE LINE DIAGRAM AND DETAILS
E-2.0	ELECTRICAL BASEMENT LIGHTING PLAN & SCHEDULE
E-2.1	ELECTRICAL FIRST FLOOR LIGHTING PLAN
E-3.0	ELECTRICAL BASEMENT POWER/SIGNAL PLAN
E-3.1	ELECTRICAL FIRST FLOOR POWER/ SIGNAL PLAN
E-3.2	ELECTRICAL ROOF POWER PLAN
E-4.0	ELECTRICAL BASEMENT SIGNAL PLAN
E-4.1	ELECTRICAL FIRST FLOOR SIGNAL PLAN
E-5.0	ELECTRICAL GENERATOR AND FIRE ALARM DETAILS

H2M Architects + Engineers
538 Broad Hollow Road
4th Floor East
Melville, NY 11747
P: (516) 938-0600
F: (631) 694-4122

LKB Consulting Engineers
1 Aerial Way
Syosset, NY 11791
P: (516) 938-0600

Cashin Associates, P.C.
Engineering - Planning - Construction Management
1200 E Veterans Memorial Hwy # 200
Hauppauge, NY 11788
P: (631) 348-7600

CONTRACT NO.:

APPROVED BY: _____ _____
WAYNE HORSELY — DATE
REGIONAL DIRECTOR

APPROVED BY: _____ _____
SCOTT G. FISH, P.E. — DATE
DIRECTOR OF ENGINEERING

ABBREVIATIONS

A	Air
AB	Anchor Bolt
A/C	Air Conditioning
ACI	American Concrete Institute
ACST	Acoustic
ACT	Acoustical Ceiling Tile
ACU	Air Conditioning Unit
AD	Access Door
ADAPT	Adaptation
ADH	Adhesive
ADJ	Adjustable
ADMIN	Administration
ADO	Automatic Door Operator
A/E	Architect/Engineer
AFF	Above Finish Floor
ALT	Alternate
ALUM	Aluminum
ANCH	Anchor
ANSI	American National Standards Institute
APA	Access Panel
APPROX	Approximately
ASPH	Asphalt
ASPPLK	Asphalt Plank
ASSIST	Assistant
ASTM	American Society for Testing & Materials
AT	Acoustical Tile
AWS	American Welding Society
BAL	Balance
BB	Bulletin Board
BC	Brick Course
BD	Board
BLDG	Building
BLK	Block
BLKG	Blocking
BM	Beam
B.O.	Bottom Of
BOL	Bottom Of Lintel
BOT	Bottom
BR	Bumper Rail
BRKT	Bracket
BU	Built-Up
CAB	Cabinet
CB	Catch Basin
CEM	Cement
CER	Ceramic
CFI	Conductive Flooring
CG	Corner Guard
CHBD	Chalkboard
CIP	Cast-in-Place
CJ	Control Joint
CLG	Ceiling
CLGL	Clear Glass
CLO	Closet
CMU	Concrete Masonry Unit
CO	Clean Out
COL	Column
COMM	Communication
CONC	Concrete
CONST	Construction
CONT	Continuous
CONTR	Contractor
CORR	Corridor
CPT	Carpet
CR	Card Reader
CRS	Corrosion-Resistant Steel
CRSI	Concrete Reinforcing Steel Institute
C/S	Countersunk
CT	Ceramic Tile
CTG	Coating
CTR	Center
CU	Copper
CW	Cold Water
D	Clothes Dryer
DBL	Double
DET	Detail
DF	Drinking Fountain
DIA	Diameter
DIAG	Diagonal
DIM	Dimension
DISP	Dispenser
DN	Down
DO	Ditto
DR	Dressing
DS	Downspout
DWG	Drawing
DWR	Drawer
E	Electrical
EA	Each
EJ	Expansion Joint
EL	Elevation
ELEC	Electric/Electrical
ELEV	Elevator
ENG	Engineer
EP	Electrical Panel
EPY	Epoxy Coating
EQ	Equal
EQUIP	Equipment
E.S.	Each Side
EWC	Electric Water Cooler
EXAM	Examination
EXIST	Existing
EXST	Exhaust
EXP	Exposed
EXPN	Expansion
EXT	Exterior
F	Female
FAI	Fresh Air Intake
F.C.	Fire Code
F.B.O.	Furnished by Others
FC	Filing Cabinet
FCU	Fan Coil Unit
FD	Floor Drain
FE	Fire Extinguisher
FF	Finish Floor
FHC	Fire Hose Cabinet
FHMS	Flat Head Machined Screw
FIN	Finish
FLAM	Flammable
FLR	Floor
FLS	Flash
FDN	Foundation
FP	Fire Partition
FR	Fire Retardent
FSP	Fire Standpipe
FTG	Footing
FXGL	Fixed Glass
FUR'G	Furring
G	Gas
GA	Gauge
GALV	Galvanized
GB	Grab Bar
GEN	General
GL	Glass, Glazed
GR	Grade
GRT	Grout
GWB	Gypsum Wall Board
GYP	Gypsum
GYP. BD.	Gypsum Board
HC	Handicapped
HDBD	Hardboard
HDWD	Hardwood
HDWE	Hardware
HM	Hollow Metal
HOR	Horizontal
HR	Handrail
HT	Height
HTG	Heating
HW	Hot Water
ID	Inside Diameter
INSUL	Insulation/Insulating
INT	Interior
JNT	Joint
JST	Joist
KP	Kick Plate
LAM	Laminate
LAV	Lavatory
LDR	Leader
LKR	Locker
LLH	Long Leg Horizontal
LLV	Long Leg Vertical
LOC	Location
LP	Low Point
LMSTN	Limestone
LT	Light
M	Mechanical
MANUF	Manufacturer
MATL	Material
MAX	Maximum
MB	Modified Bitumen
MECH	Mechanical
M.E.P.	Mechanical, Electrical, Plumbing
MFD	Manufactured
MFR	Manufacturer
MGR	Manager
MID	Middle
MIN	Minimum
MISC	Miscellaneous
MLDG	Molding
MNT	Mounted
MO	Masonry Opening
MOIST	Moisture
MPE	Mechanical Plumbing Electrical
MR	Moisture Resistant
MT	Metal Threshold
MTL	Metal
MTP	Metal Toilet Partition
MULT	Multiple
NBS	National Bureau of Standard
NIC	Not in Contract
NL	Neoprene Latex
NO	Number
NRCA	National Roofing Contractors Assoc.
NTS	Not to Scale
WTG	Waiting
WVF	Welded Vinyl Flooring
WWF	Welded Wire Fabric
OC	On Center
OD	Outside Diameter
OH	Overhead Door
OPGN	Opening
OPP	Opposite
OW	Observation Window
OWSJ	Open Web Steel Joist
P	Plumbing
PAR	Parallel
PC	Poured Concrete
PERP	Perpendicular
PL	Plate or Plaster
PLAS	Plastic
P.LAM	Plastic Laminate
PLBG	Plumbing
PLYWD	Plywood
PNL	Panel
PNTD	Painted
PORT	Portable
PROJ	Projection
PS	Product Standard
PSF	Pounds per Square Foot
PSI	Pounds per Square Inch
PT	Paint
PTD	Painted
PTN	Partition
PVC	Polyvinyl Chloride
PW	Pass Window
QA	Quality Assurance
QT	Quarry Tile
R	Radius or Riser
(R)	Relocated Item
RBR	Rubber Base
R&C	Reception & Control
RCP	Reflected Ceiling Plan
RD	Roof Drain
RDL	Roof Drain Leader
REC	Reception
REINF	Reinforced
REF	Refrigeration
REG	Reglet
REHAB	Rehabilitation
REPLEN	Replenishing
REPRO	Reproduction
REQM	Requirement
RESIL	Resilient
RM	Room
RO	Rough Opening
RP	Retractable Partition
RST	Resistant
RT	Rubber Tile
SC	Special Coating
SCHED	Schedule
SECT	Section
SECY	Secretary
SGFU	Structural Glazed Facing Units
SH SIM	Shelving, Shelf
SJC	Similar
SJF	Seismic Joint Ceiling
SJW	Seismic Joint Floor
SPEC	Seismic Joint Wall
SQ	Specifications
S&R	Square
SS	Shelf & Rod
S.S.	Service Sink
STA	Stainless Steel
STL	Station
STOR	Steel
STR	Storage
STRUC	Structure
SUB	Structural
SUPER	Subcontractor
SUSP	Supervisor
SVF	Suspend
SW	Sheet Vinyl Flooring
SYM	Sidewalk
TOI	Symmetrical
TB	Toilet
TECH	Tack Board
TEL	Technician
TEM	Telephone
TEMP	Tempered
TEMPY	Temperature
TERR	Temporary
THK	Terrazzo
T.O.D.	Thick
T.O.M.	Top of Deck
T.O.S.	Top of Masonry
TOX	Top of Steel
TR	Toxic
TRTD	Tread
TRTMT	Treated
TVCTV	Treatment
TVWTV	Screen or Monitor
	Ceiling Mounted Screen
TYP	or Monitor, Wall Mounted
UBC	Typical
UNAS	Uniform Building Code
UNO	Unassigned
UNPT	Unless Noted Otherwise
UPS	Unpainted
UR	Uninterrupted Power Supply
UTIL	Urinal
V	Utility
VB	Vacuum
VCT	Vapor Barrier
VERT	Vinyl Composition Tile
VEST	Vertical
VH	Vestibule
VIN	Vinyl Homogeneous
VTR	Vinyl
VWC	Vent Thru Roof
W	Vinyl Wall Covering
W/	Clothes Washer
WC	With
W/C	Water Closet
WD	Wheelchair
WH	Width or Wood
WI	Water Heater
W/O	Wrought Iron
WP	Without
WR	Waterproofing
WSCT	Waste Receptacle
WT	Wainscot
	Wall Tile

SYMBOLS LEGEND

Symbol	Description
102	Room Designation
101	Door Number
5 / A2.2	Building Section Cut
5 / A2.2	Wall Section Cut
5 / A2.2	Detail Key
5 / A2.2	Elevation Key
	Acoustic Tile Ceramic Tile
	Rigid Insulation
	Batt Insulation
	Brick
	Concrete Cement, Gypsum
	Concrete Block
	Earth
	Wood Blocking
H	Column Grid
	Elevation Line
H TITLE SCALE	Drawing Title
5 / A2.2	Detail Reference
SHEET No. A D B C	Interior Elevation Reference
5	Revision
	Fire Extinguisher

PARTITION TYPES

SYMBOL	CONSTRUCTION DESCRIPTION	SYMBOL	CONSTRUCTION DESCRIPTION

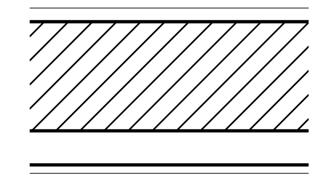

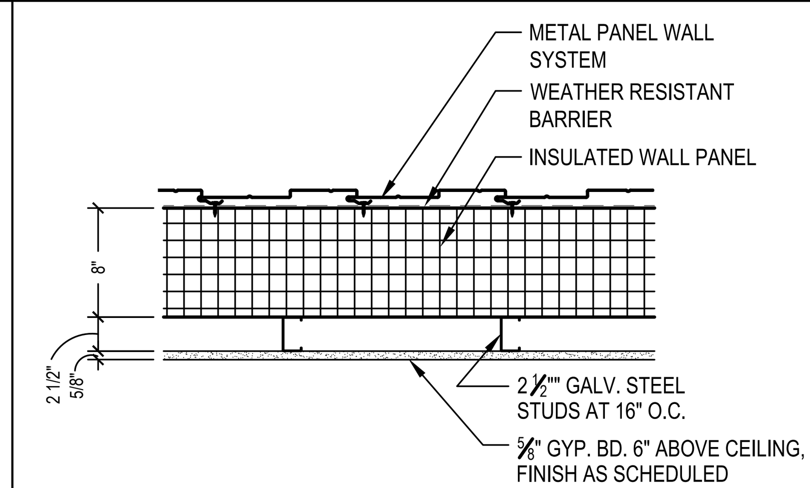

1 EXTERIOR INSULATED WALL PANEL WITH METAL WALL PANEL SYSTEM

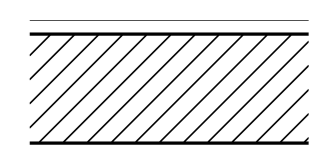

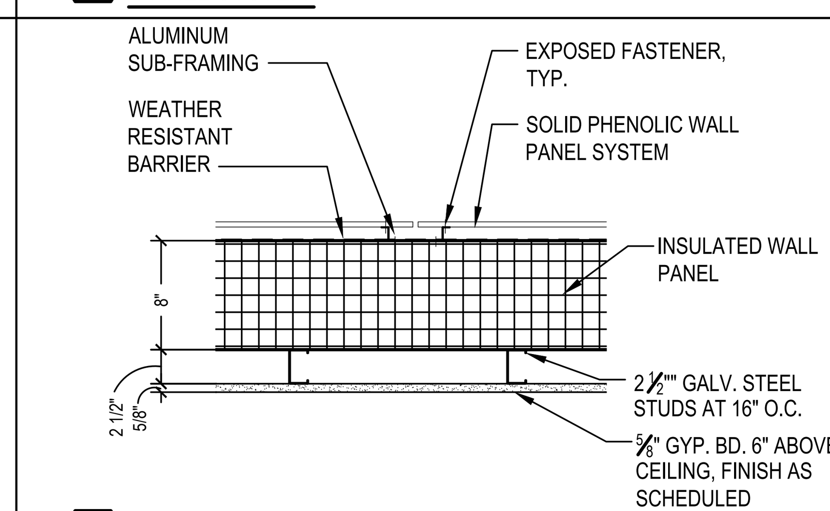

2 EXTERIOR INSULATED WALL PANEL WITH SOLID PHENOLIC WALL PANEL SYSTEM

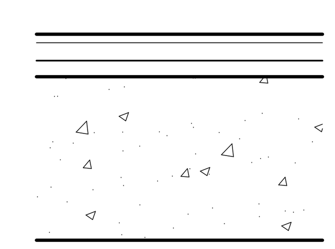

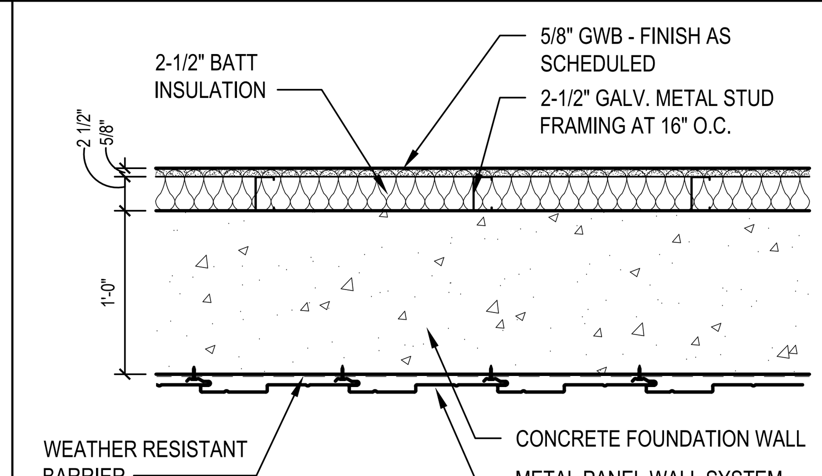

3 FOUNDATION WALL WITH METAL PANEL WALL SYSTEM

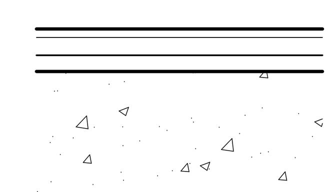

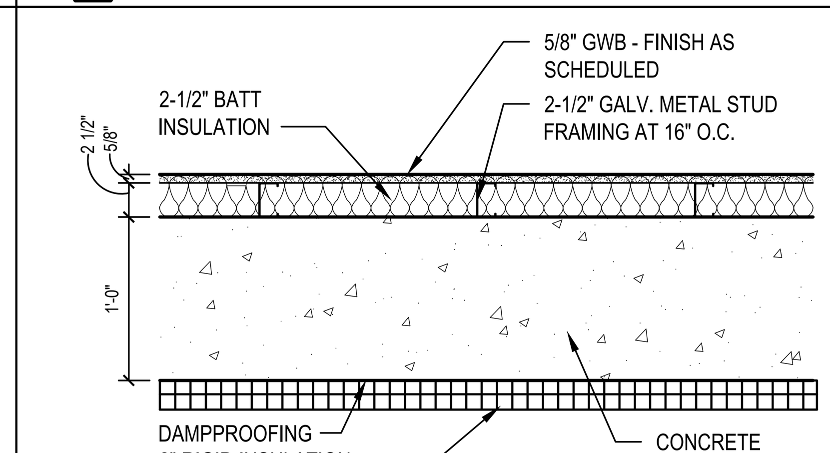

4 FOUNDATION WALL WITH INTERIOR FURRING

5 NOT USED

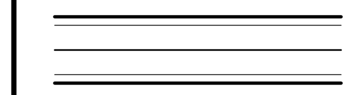

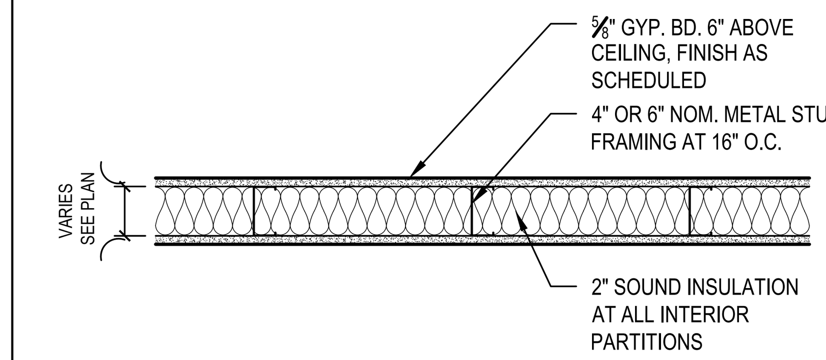

6 INTERIOR METAL STUD WALL

NOTE:
1. FOR WALLS RECEIVING TILE, CEMENT BOARD TO BE USED IN PLACE OF GYPSUM BOARD
2. PROVIDE TYPE 'X' GWB AT FIRE RATED PARTITIONS.

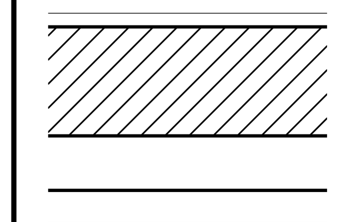

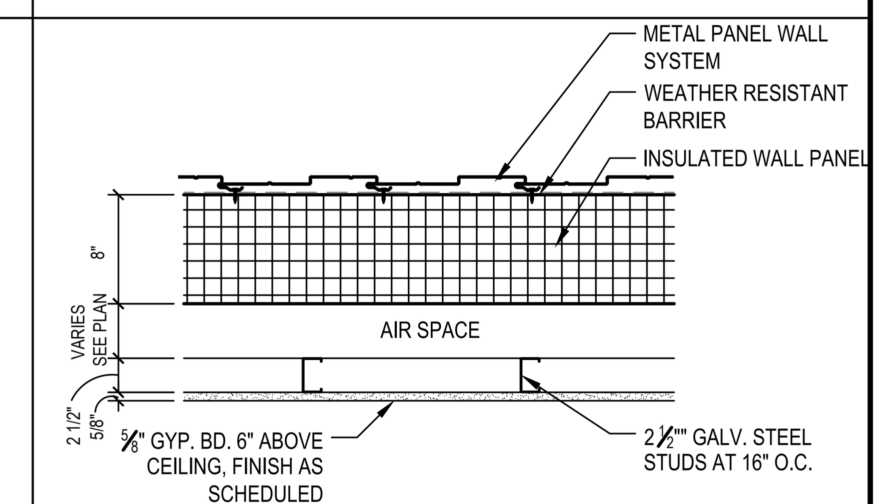

7 EXTERIOR INSULATED WALL PANEL WITH METAL WALL PANEL SYSTEM

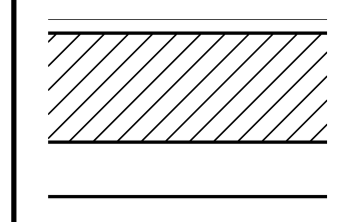

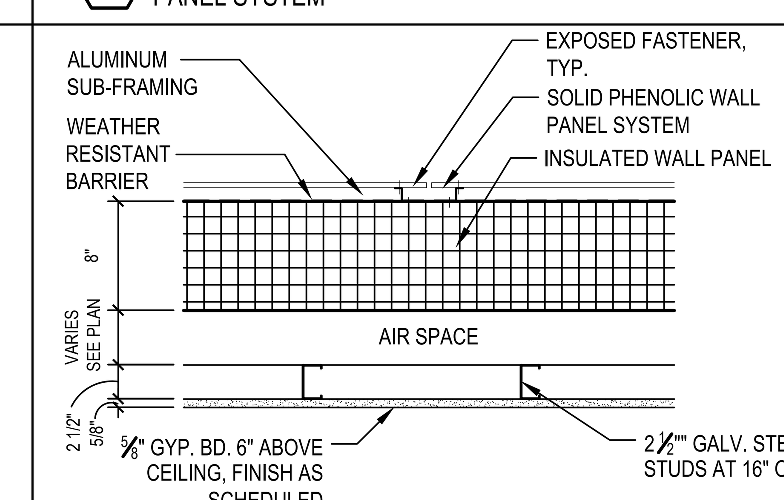

8 EXTERIOR INSULATED WALL PANEL WITH SOLID PHENOLIC WALL PANEL SYSTEM

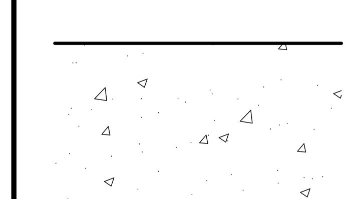

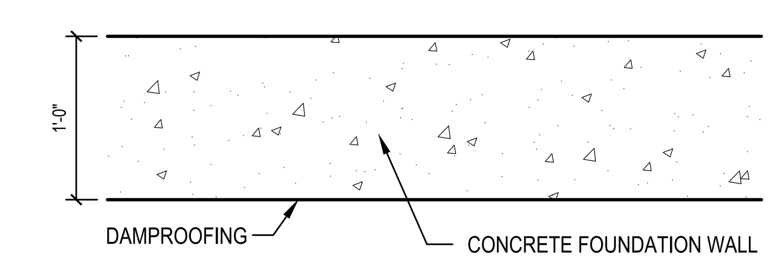

9 FOUNDATION WALL

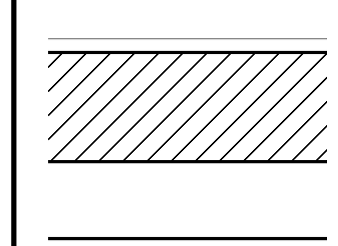

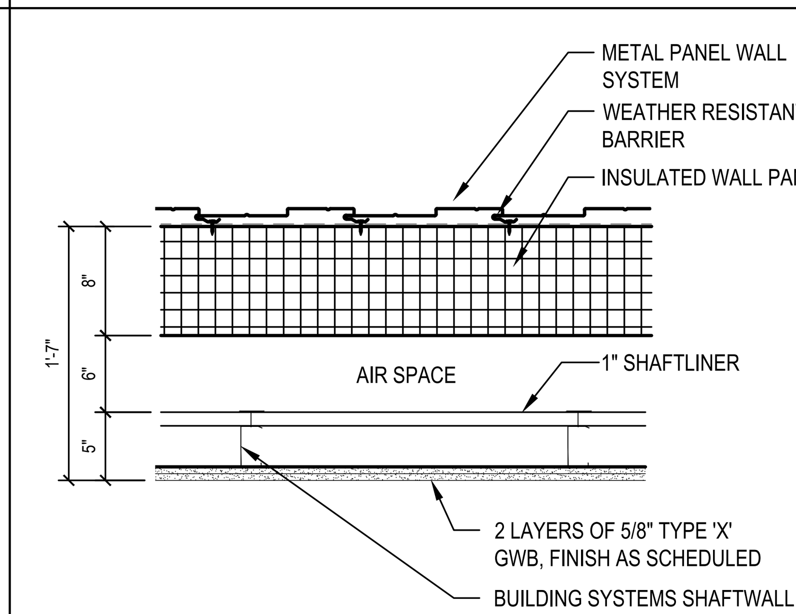

10 EXTERIOR FIRE RATED WALL - UL DESIGN NO. U415

PROGRAM CONSULTANT: Living with the BAY

CLIENTS: NEW YORK STATE OF OPPORTUNITY. Parks, Recreation and Historic Preservation

Governor's Office of Storm Recovery

PROJECT MANAGER: Stantec

LEAD LANDSCAPE ARCHITECTS + ARCHITECTS:
H2M architects + engineers
538 Broad Hollow Road
4th Floor East
Melville, NY 11747
P:(631)756-8000
F:(631)694-4122

CERTIFIED ARBORISTS + LANDSCAPE ARCHITECTS:
GIBNEY DESIGN LA PC LANDSCAPE ARCHITECTURE PC
RICHARD W GIBNEY RLA ISA

STRUCTURAL ENGINEERS:
LKB CONSULTING ENGINEERS

CIVIL ENGINEERS + LANDSCAPE ARCHITECTS:
Cashin Associates, P.C.
ENGINEERING · PLANNING · CONSTRUCTION MANAGEMENT
Est. 1958

LANDSCAPE ARCHITECTS:
MATRIXNEWORLD
Engineering Progress
Matrix New World Engineering, Land Surveying and Landscape Architecture, P.C.
442 State Route 35, Second Floor
Eatontown, New Jersey 07724
WBE / DBE / SBE
Tel: 732-588-2999
Fax: 973-240-1818
www.matrixneworld.com
NEW JERSEY CERTIFICATE OF AUTHORIZATION No. 24GA27962300

SEAL

"ALTERATION OF THIS DOCUMENT EXCEPT BY A LICENSED PROFESSIONAL IS ILLEGAL"

THESE DOCUMENTS CONTAIN POTENTIALLY SENSITIVE INFORMATION AND SHALL BE USED FOR THEIR INTENDED PURPOSE. ONCE THE INTENDED PURPOSE HAS CEASED, THE DOCUMENTS SHALL BE DESTROYED IN A SECURE MANNER.

IT IS A VIOLATION OF STATE EDUCATION LAW FOR ANY PERSON, UNLESS UNDER THE DIRECTION OF A LICENSED ARCHITECT TO ALTER THIS DOCUMENT IN ANYWAY. ALTERATIONS MUST HAVE THE SEAL AFFIXED ALONG WITH A DESCRIPTION OF THE ALTERATIONS, DATE AND ARCHITECT'S SIGNATURE. COPYRIGHT © 2012

PHASE
90% SUBMISSION

Revisions

Number	*Description*	*Date:*
1		
2		
3		
4		
5		

Project Title

HEMPSTEAD LAKE STATE PARK

CONTRACT
NYSP
WORK ORDER: LI-022
CONTRACT: D004472
COA: 1290350/30377/33001/ PRK 4559

PROJECT #: NYSP-1503
DATE: JULY 2017
DESIGNED BY: ACP
DRAWN BY: TJS
CHECKED BY:
REVIEWED BY:

SHEET TITLE
ABBREVIATIONS, SYMBOLS AND PARTITION TYPES

SHEET #
G1.0

C:\Users\aconcepcion\appdata\local\temp\AcPublish_8268\G1.0.dwg Last Modified: Jul 25, 2017 - 11:56am Plotted on: Jul 25, 2017 - 12:00pm By aconcepcion

CODE ANALYSIS NOTES

2015 INTERNATIONAL BUILDING CODE

CHAPTER 3 - USE AND OCCUPANCY CLASSIFICATION
- ASSEMBLY GROUP A-3
- BUSINESS GROUP B
- STORAGE GROUP S-2 (LOW-HAZARD STORAGE)

CHAPTER 5 - GENERAL BUILDING HEIGHTS AND AREAS
- TABLE 504.3
  - SEE 'ALLOWABLE HEIGHT AND BUILDING AREA' TABLE ON THIS SHEET FOR INFORMATION
- TABLE 504.4
  - SEE 'ALLOWABLE HEIGHT AND BUILDING AREA' TABLE ON THIS SHEET FOR INFORMATION
- TABLE 506.2
  - SEE 'ALLOWABLE HEIGHT AND BUILDING AREA' TABLE ON THIS SHEET FOR INFORMATION - MOST RESTRICTIVE OCCUPANCY GOVERNS (A-3).
- 508.3.2 - NONSEPARATED OCCUPANCIES
  - NO SEPARATION REQUIRED BETWEEN OCCUPANCIES - MOST RESTRICTIVE OCCUPANCY GOVERNS (A-3)

CHAPTER 6 - TYPES OF CONSTRUCTION
- TABLE 601
  - SEE 'FIRE-RESISTANCE RATING REQUIREMENTS FOR BUILDING ELEMENTS' TABLE ON THIS SHEET FOR INFORMATION
- TABLE 602
  - 0 HOUR FIRE-RESISTANCE RATING REQUIRED FOR EXTERIOR WALLS GREATER THAN 30 FEET FIRE SEPARATION DISTANCE (PROPERTY LINE).

CHAPTER 7 - FIRE-RESISTANCE-RATED CONSTRUCTION
- SECTION 705.2
  - PROJECTIONS FROM EXTERIOR WALLS SHALL BE OF ANY APPROVED MATERIAL

CHAPTER 8 - INTERIOR FINISHES
- TABLE 803.11 - INTERIOR WALL AND CEILING FINISH REQUIREMENTS BY OCCUPANCY (A-3 = MOST RESTRICTIVE)
  - INTERIOR EXIT STAIRWAYS, RAMPS & PASSAGEWAYS SHALL HAVE NOT LESS THAN A CLASS 'B' RATING CORRIDORS AND EXIT ACCESS STAIRWAYS & RAMPS SHALL HAVE NOT LESS THAN A CLASS 'A' RATING - ALL OTHER SPACES SHALL HAVE NOT LESS THAN A CLASS 'C' RATING

CHAPTER 9 - FIRE PROTECTION SYSTEMS
- 903.2.1.3 - GROUP A-3
  - SPRINKLER SYSTEM NOT REQUIRED FOR A-3 OCCUPANCY WITH FIRE AREA LESS THAN 12,000 SQUARE FEET AND OCCUPANCY LOAD LESS THAN 300 PEOPLE AND FIRE AREA LOCATED ON A FLOOR AT LEVEL OF EXIT DISCHARGE.
- NO AUTOMATIC SPRINKLER SYSTEM REQUIREMENTS FOR OCCUPANCIES B AND S-2 INCLUDED IN SECTION 903. 903.2.11.3 REQUIRES AUTOMATIC SPRINKLER SYSTEM IN BUILDINGS THAT HAVE ONE OR MORE STORIES WITH AN OCCUPANT LOAD OF 30 OR MORE LOCATED 55 FEET OR MORE ABOVE THE LOWEST LEVEL OF FIRE DEPARTMENT ACCESS.
- 906.1 - PORTABLE FIRE EXTINGUISHERS REQUIRED
- TABLE 906.3(1) - MAXIMUM DISTANCE TO FIRE EXTINGUISHERS SHALL BE 75'-0"

CHAPTER 10 - MEANS OF EGRESS
- 1003.2 - MINIMUM CEILING HEIGHT = 7'-6"
- SECTION 1004 - OCCUPANT LOAD
  - TOTAL BUILDING OCCUPANT LOAD = 99 PERSONS
- 1005.3.1
  - THE CAPACITY, IN INCHES, OF MEANS OF EGRESS STAIRWAYS SHALL BE CALCULATED BY MULTIPLYING THE OCCUPANT LOAD SERVED BY SUCH STAIRWAY BY A MEANS OF EGRESS CAPACITY FACTOR OF 0.3 INCH PER OCCUPANT.
- 1005.3.2
  - THE CAPACITY, IN INCHES, OF MEANS OF EGRESS COMPONENTS OTHER THAN STAIRWAYS SHALL BE CALCULATED BY MULTIPLYING THE OCCUPANT LOAD SERVED BY SUCH COMPONENT BY A MEANS OF EGRESS CAPACITY FACTOR OF 0.2 INCH PER OCCUPANT.
- TABLE 1006.2.1
  - SPACES WITH ONE EXIT SHALL HAVE A MAXIMUM OCCUPANT LOAD OF 49 AND A MAXIMUM COMMON PATH OF EGRESS TRAVEL DISTANCE OF 75'
- TABLE 1006.3.1
  - MINIMUM NUMBER OF EXITS OR ACCESS TO EXITS PER STORY FOR AN OCCUPANT LOAD OF 1-500 PERSONS = 2 EXITS
- 1007.1.1
  - WHERE TWO EXITS ARE REQUIRED, THEY SHALL BE PLACED A DISTANCE APART EQUAL TO NOT LESS THAN ONE-HALF THE LENGTH OF THE MAXIMUM OVERALL DIMENSION OF THE BUILDING OR AREA TO BE SERVED MEASURED IN A STRAIGHT LINE BETWEEN THEM.
- 1009.3 STAIRWAYS
  - STAIRWAY BETWEEN STORIES SHALL HAVE A CLEAR WIDTH OF 48" BETWEEN HANDRAILS AND SHALL INCORPORATE AREA OF REFUGE (30" X 48")
- SECTION 1009.6 - AREAS OF REFUGE
  - 1009.6.1 - MAXIMUM TRAVEL DISTANCE FROM ANY ACCESSIBLE SPACE TO AN AREA OF REFUGE SHALL NOT EXCEED EXIT ACCESS TRAVEL DISTANCE = 200'-0"
  - 1009.6.2 - AREA OF REFUGE SHALL HAVE DIRECT ACCESS TO STAIRWAY
  - 1009.6.3 - AREA OF REFUGE SHALL BE SIZED TO ACCOMMODATE ONE WHEELCHAIR SPACE OF 30" x 48" FOR EACH 200 OCCUPANTS (ONE AREA OF REFUGE PROVIDED WITHIN EGRESS STAIR AT EACH FLOOR LEVEL - 2 TOTAL)
  - 1009.6.4 - AREA OF REFUGE SHALL BE SEPARATED FROM THE REMAINDER OF THE STORY BY SMOKE BARRIER OR HORIZONTAL EXIT.
  - 1009.6.5 - AREA OF REFUGE SHALL BE PROVIDED WITH A TWO-WAY COMMUNICATION SYSTEM COMPLYING WITH SECTION 1009.8.
- SECTION 1010.1.1
  - MINIMUM DOOR SIZE IS 32" X 80"
- SECTION 1010.1.6
  - LANDINGS SHALL HAVE WIDTH NOT LESS THAN THE STAIRWAY OR DOOR.
- SECTION 1011.3
  - MINIMUM HEADROOM IN A STAIRWAY SHALL BE 80"
- SECTION 1011.5
  - STAIR RISER HEIGHT SHALL BE 4 INCHES MINIMUM AND 7 INCHES MAX., STAIR TREAD DEPTH SHALL BE 11 INCHES MIN.
- SECTION 1013
  - APPROVED EXIT SIGNS SHALL BE PROVIDED AS OUTLINED IN SECTION 1013
- SECTION 1014.2
  - STAIRWAYS SHALL HAVE HANDRAILS ON EACH SIDE, BETWEEN 34 INCHES AND 38 INCHES ABOVE STAIR NOSING
- SECTION 1014.6
  - HANDRAIL EXTENSIONS ARE REQUIRED AS FOLLOWS: 12" BEYOND THE TOP RISER AND ONE TREAD DEPTH BEYOND THE BOTTOM RISER
- SECTION 1015.2
  - GUARDS SHALL BE LOCATED ALONG WALKING SURFACES THAT ARE LOCATED MORE THAN 30" MEASURED VERTICALLY FROM FINISHED FLOOR OR GRADE
- SECTION 1015.3
  - GUARDS SHALL NOT BE LESS THAN 42" HIGH MEASURED VERTICALLY
- SECTION 1015.6
  - GUARDS SHALL BE PROVIDED AT MECHANICAL EQUIPMENT LOCATED WITHIN 10 FEET OF A ROOF EDGE
- TABLE 1017.2
  - MAXIMUM EXIT ACCESS TRAVEL DISTANCE FOR A GROUP 'A' OCCUPANCY WITHOUT A SPRINKLER SYSTEM SHALL BE 200 FEET
- TABLE 1020.1
  - CORRIDOR FIRE RESISTANCE RATING = 1 HOUR FOR OCCUPANT LOAD SERVED BY CORRIDOR GREATER THAN 30 OCCUPANTS
- SECTION 1023.1
  - INTERIOR EXIT STAIRWAYS SHALL BE ENCLOSED AND LEAD DIRECTLY TO EXTERIOR OF THE BUILDING
- SECTION 1023.2
  - INTERIOR EXIT STAIRWAYS SHALL BE CONSTRUCTED AS A FIRE BARRIER (SECTION 707) AND/OR HORIZONTAL ASSEMBLY (SECTION 711). 1 HOUR FIRE RATING REQUIRED WHEN CONNECTING LESS THAN FOUR STORIES.
- SECTION 1023.7
  - UNRATED EXTERIOR WALLS OF THE INTERIOR STAIRWAY SHALL BE PROTECTED AS PER SECTION 1023.7.
- SECTION 1024.1
  - EXIT PASSAGEWAY MINIMUM WIDTH = 44"

GENERAL NOTES

1. ALL INTERIOR FINISHES ARE DESIGNED TO MEET OR EXCEED IBC BUILDING CODE REQUIREMENTS.
2. ALL GLAZING SHALL COMPLY WITH SECTION 2406 OF THE NYS BUILDING CODE. ALL GLAZING IN DOORS, FIXED SIDE PANELS ADJOINING DOORS, INTERIOR PARTITIONS WHERE GLAZING EXTENDS TO WITHIN 1'-6" OF FINISHED FLOOR AND GLASS PANELS GREATER THAT (9) SQ. FT. TO BE FULLY TEMPERED SAFETY GLASS.
3. ALL FIRE RATED WALLS SHALL MAINTAIN CONTINUOUS FIRE RATING FROM BOTTOM OF WALL TO UNDERSIDE OF FLOOR OR ROOF DECK ABOVE.
4. PROVIDE 'TRUSS IDENTIFICATION SIGNS' IN ACCORDANCE WITH NEW YORK STATE RULES AND REGULATIONS PART 1264 - IDENTIFICATION OF BUILDING UTILIZING TRUSS TYPE CONSTRUCTION. FURNISH AND INSTALL SIGNS AT ALL EXTERIOR DOORS NOT MORE THEN 12 INCHES HORIZONTALLY FROM LATCH SIDE OF DOOR JAMB AND NOT LESS THAN 42 INCHES NOR MORE THAN 60 INCHES ABOVE THE WALKING SURFACE.

LEGEND

Symbol	Description
(hatched wall)	1 HOUR MIN. FIRE RATED WALL, ¾ HOUR MIN. FIRE RATED OPENING PROTECTIVES (SEE GENERAL NOTE 3)
(dotted area)	INDICATES AREAS OF CEILING STRUCTURE AND DECKING TO RECEIVE (3) LAYERS OF GYP. BD. CONSTRUCTION AS REQUIRED TO PROVIDE 1 HOUR MIN. FIRE RATING
OCCUPANCY → STORAGE / 1 PERSON ← # OF PERSONS AREA (sf.) → 223 sf / 300 sf / PERSON ← SQUARE FOOT/PERSON	
101 (square)	EXIT DOOR
101 (circle)	EXIT ACCESS DOOR

ALLOWABLE HEIGHT AND BUILDING AREAS

	ALLOWED	PROPOSED
BUILDING OCCUPANCY	-	A-3, B, S-2
CONSTRUCTION CLASSIFICATION	-	TYPE IIIB
HEIGHT (STORIES) - TABLE 504.4	3 STORIES	1 STORY PLUS BASEMENT
HEIGHT (FEET) - TABLE 504.3	55'-0"	34'-0"
FIRE AREA - TABLE 506.2	9,500 SF	8,174 SF

FIRE-RESISTANCE RATING REQUIREMENTS FOR BUILDING ELEMENTS [1]

(IBC CODE TABLE 601)

CONSTRUCTION CLASSIFICATION: TYPE IIIB

BUILDING ELEMENT	HOURS
STRUCTURAL FRAME	0
EXTERIOR BEARING WALLS	2
EXTERIOR NON-BEARING WALLS	0
INTERIOR BEARING WALLS	0
NON-BEARING WALLS	0
FLOOR CONSTRUCTION	0
ROOF CONSTRUCTION	0

1. VALUES LISTED REPRESENT MINIMUM GENERAL VALUES, AS REQUIRED BY THE NYS BUILDING CODE. REFER TO PLANS AND SPECIFICATIONS FOR ADDITIONAL FIRE RATING INFORMATION.
2. SEE DRAWING G1.0 FOR CONSTRUCTION/PARTITION TYPE INFORMATION.

CAPACITY OF EXIT ACCESS DOORS

(IBC CODE SECTION 1005.3.2)

DOOR #	MINIMUM WIDTH REQUIRED	ACTUAL WIDTH	# OF PERSONS ALLOWED	MAX. # OF PERSONS PROPOSED
B04	32"	36"	180	7
B05	32"	36"	180	1
B06	32"	36"	180	1
B07	32"	36"	180	1
102	32"	36"	180	16
103	32"	36"	180	16
106	32"	36"	180	8
108	32"	36"	180	42
109	32"	36"	180	2
110	32"	36"	180	1
111	32"	36"	180	2
112	32"	36"	180	2
116	32"	36"	180	2
117	32"	72"	360	44
124	32"	36"	180	7

MINIMUM NUMBER OF EXITS PER OCCUPIED SPACE

(IBC CODE SECTION 1006)

FLOOR	ROOM #	ROOM NAME	# OF OCCUPANTS	REQ'D. # OF EXITS	# OF EXITS PROVIDED
BASEMENT	B01	STORAGE ROOM	11	1 EXIT	3 EXITS
	B02	STORAGE	1	1 EXIT	1 EXIT
	B03	ELECTRICAL ROOM	1	1 EXIT	1 EXIT
	B04	MECHANICAL ROOM	1	1 EXIT	1 EXIT
FIRST FLOOR	107	MULTIPURPOSE ROOM	25	1 EXIT	2 EXITS
	108	KITCHENETTE / WET LAB	8	1 EXIT	1 EXIT
	110	STORAGE	1	1 EXIT	1 EXIT
	111	MONITOR AND CONTROL ROOM	2	1 EXIT	1 EXIT
	112	CONFERENCE ROOM	2	1 EXIT	1 EXIT
	116	MULTIPURPOSE ROOM	16	1 EXIT	1 EXIT
	117	OVERLOOK DECK	32	1 EXIT	2 EXIT

CAPACITY OF EXIT DOORS

(IBC CODE SECTION 1005.3.2)

DOOR #	MINIMUM WIDTH REQUIRED	ACTUAL WIDTH	# OF PERSONS ALLOWED	MAX. # OF PERSONS PROPOSED
B01	32"	36"	180	8
B03	32"	36"	180	8
101	32"	72"	360	44
104	32"	36"	180	59

CAPACITY OF STAIRS

(IBC CODE SECTIONS 1005.3.1 AND 1009.3)

STAIR	MINIMUM WIDTH REQUIRED	MINIMUM WIDTH PROVIDED	MAX. # OF PERSONS ALLOWED	MAX. # OF PERSONS PROPOSED
STAIR 'A'	48"	48"	160	59

MINIMUM NUMBER OF EXITS PER OCCUPANT LOAD

(IBC CODE TABLE 1019.1)

FLOOR AREA	OCCUPANT LOAD	MINIMUM REQ'D. # OF EXITS	# OF EXITS PROVIDED
BASEMENT	14 PERSONS	2 EXITS	3 EXITS
FIRST FLOOR	97 PERSONS	2 EXITS	2 EXITS

MECHANICAL ROOM	1 PERSONS	
150 SF	300 SF / PERSON	
ELECTRICAL ROOM	1 PERSONS	
150 SF	300 SF / PERSON	
STORAGE ROOM	1 PERSONS	
175 SF	300 SF / PERSON	
STORAGE ROOM	11 PERSONS	
3260 SF	300 SF / PERSON	

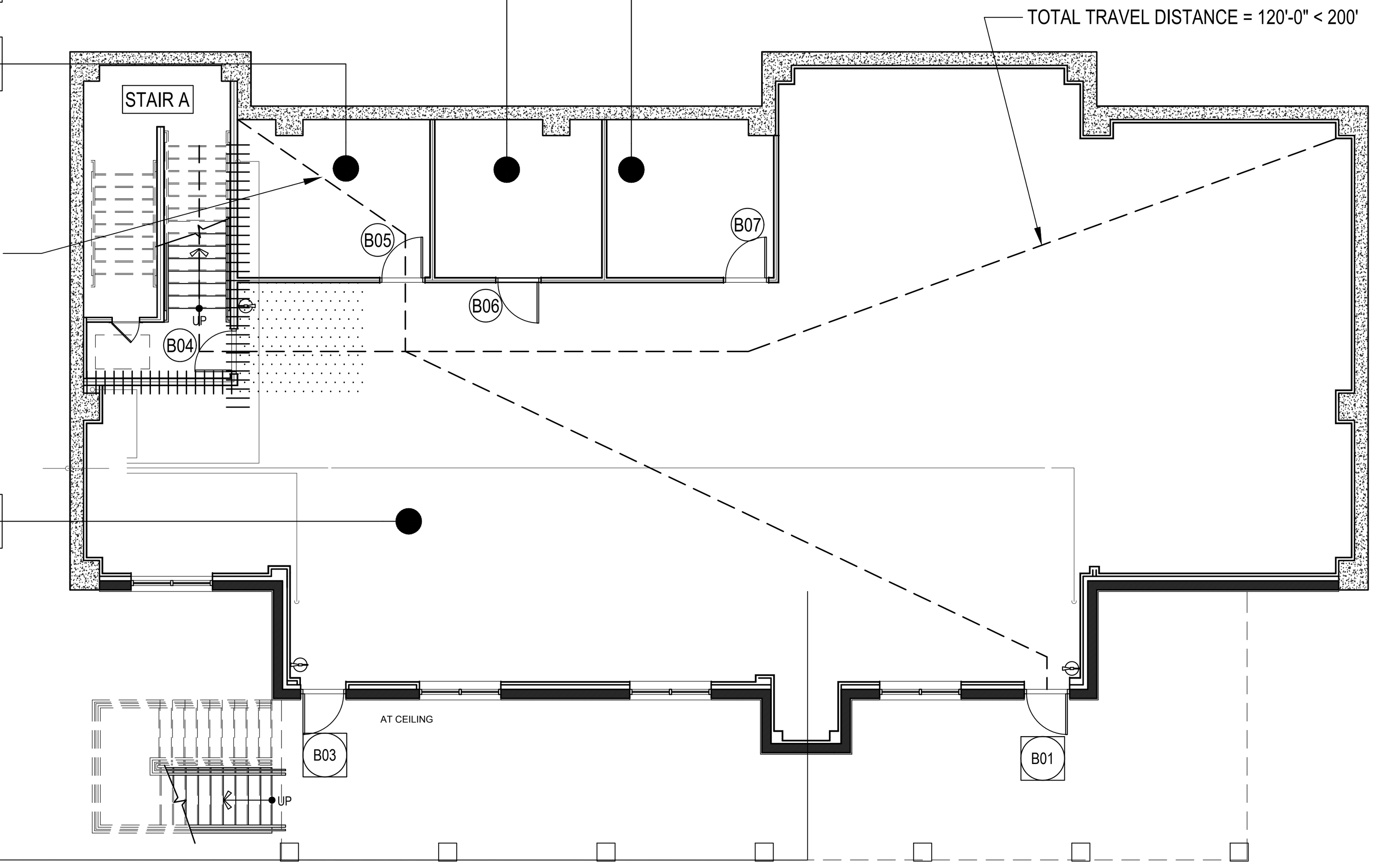

BASEMENT
GROSS AREA: 4,075 SF
TOTAL OCCUPANT LOAD: 14 PERSONS

Basement Floor Plan

SCALE: 3/32"= 1'-0"

CONFERENCE ROOM	2 PERSONS
140 SF	100 SF / PERSON
MONITOR & CONT.	2 PERSONS
180 SF	100 SF / PERSON
STORAGE	1 PERSONS
190 SF	300 SF / PERSON
WET LAB	8 PERSONS
220 SF	30 SF / PERSON
MULTIPURPOSE RM	52 PERSONS
1545 SF	30 SF / PERSON
OVERLOOK DECK	32 PERSONS
958 SF	30 SF / PERSON

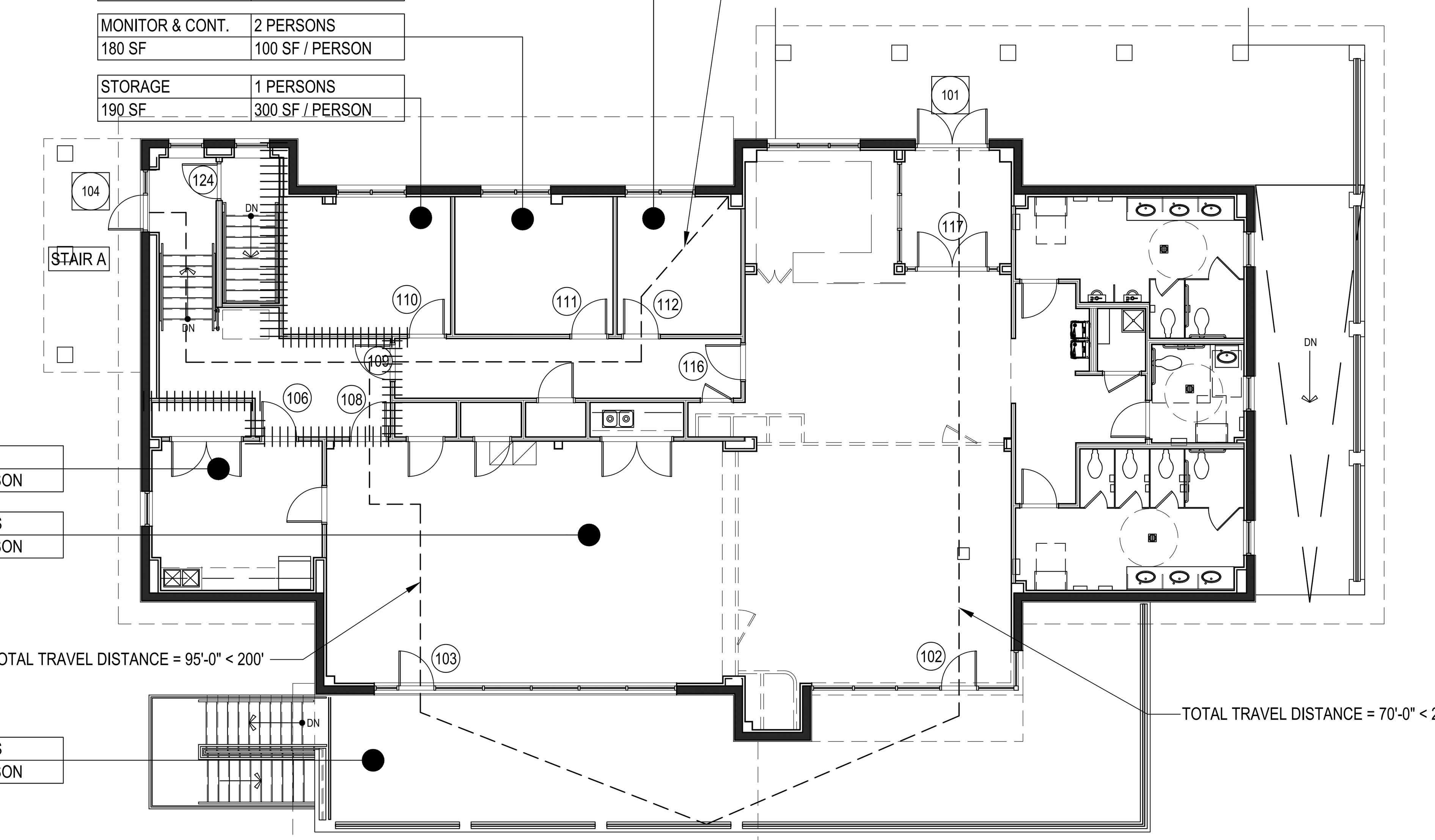

FIRST FLOOR
GROSS AREA: 4,075 SF
TOTAL OCCUPANT LOAD: 97 PERSONS

First Floor Plan

SCALE: 3/32"= 1'-0"

PROGRAM CONSULTANT: Living with the BAY

CLIENTS: NEW YORK STATE OF OPPORTUNITY. Parks, Recreation and Historic Preservation

Governor's Office of Storm Recovery

PROJECT MANAGER: Stantec

LEAD LANDSCAPE ARCHITECTS + ARCHITECTS:

H2M architects + engineers
538 Broad Hollow Road
4th Floor East
Melville, NY 11747
P:(631)756-8000
F:(631)694-4122

CERTIFIED ARBORISTS + LANDSCAPE ARCHITECTS: GIBNEY DESIGN LA PC LANDSCAPE ARCHITECTURE PC — RICHARD W GIBNEY RLA ISA

STRUCTURAL ENGINEERS: LKB CONSULTING ENGINEERS

CIVIL ENGINEERS + LANDSCAPE ARCHITECTS: Cashin Associates, P.C. ENGINEERING · PLANNING · CONSTRUCTION MANAGEMENT

LANDSCAPE ARCHITECTS:

MATRIXNEWORLD Engineering Progress
Matrix New World Engineering, Land Surveying and Landscape Architecture, P.C.
442 State Route 35, Second Floor
Eatontown, New Jersey 07724
WBE / DBE / SBE
Tel: 732-588-2999
Fax: 973-240-1818
www.matrixneworld.com
NEW JERSEY CERTIFICATE OF AUTHORIZATION No. 24GA27962300

SEAL

"ALTERATION OF THIS DOCUMENT EXCEPT BY A LICENSED PROFESSIONAL IS ILLEGAL"

THESE DOCUMENTS CONTAIN POTENTIALLY SENSITIVE INFORMATION AND SHALL BE USED FOR THEIR INTENDED PURPOSE. ONCE THE INTENDED PURPOSE HAS CEASED, THE DOCUMENTS SHALL BE DESTROYED IN A SECURE MANNER.

IT IS A VIOLATION OF STATE EDUCATION LAW FOR ANY PERSON, UNLESS UNDER THE DIRECTION OF A LICENSED ARCHITECT TO ALTER THIS DOCUMENT IN ANYWAY. ALTERATIONS MUST HAVE THE SEAL AFFIXED ALONG WITH A DESCRIPTION OF THE ALTERATIONS, DATE AND ARCHITECT'S SIGNATURE. COPYRIGHT © 2012

PHASE
90% SUBMISSION

Revisions

Number	Description	Date:
1		
2		
3		
4		
5		

Project Title

HEMPSTEAD LAKE STATE PARK

CONTRACT
NYSP
WORK ORDER: LI-022
CONTRACT: D004472
COA: 1290350/30377/33001/ PRK 4559

PROJECT #:	NYSP-1503
DATE:	JULY 2017
DESIGNED BY:	ACP
DRAWN BY:	TJS/ACP
CHECKED BY:	REVIEWED BY:

SHEET TITLE
NEW YORK STATE CODE ANALYSIS

SHEET # **G2.0**

M:\cadd\NYSP\1503\Con-docs\general\G2.0.dwg Last Modified: Jul 28, 2017 - 12:43pm Plotted on: Jul 28, 2017 - 12:53pm By aconcepcion

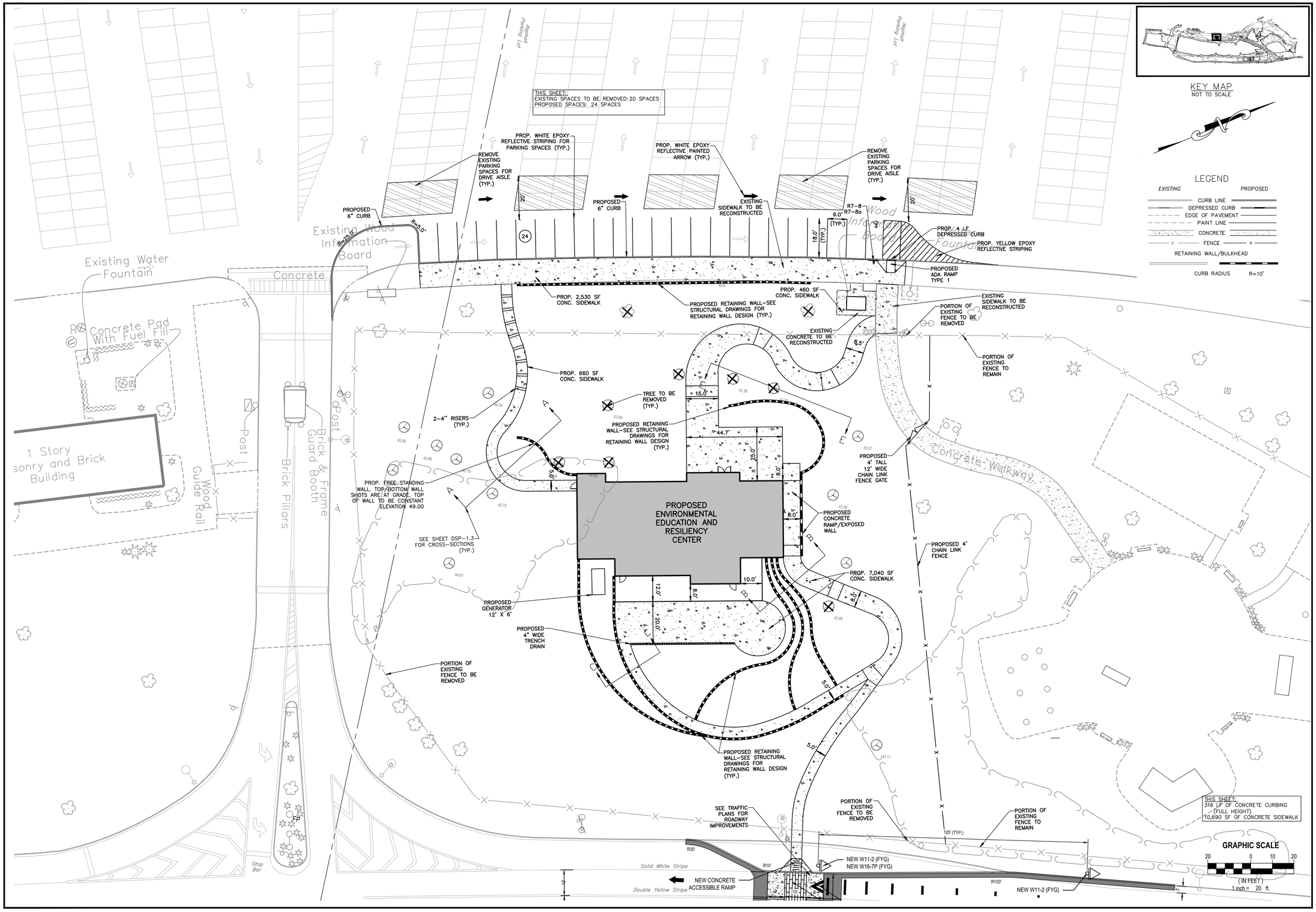

KEY MAP
NOT TO SCALE

LEGEND

EXISTING	PROPOSED
CURB LINE	
DEPRESSED CURB	
EDGE OF PAVEMENT	
PAINT LINE	
CONCRETE	
FENCE	
RETAINING WALL/BULKHEAD	
CURB RADIUS	R=10'

NY RISING

NEW YORK STATE — Parks, Recreation and Historic Preservation

CONSULTANTS:

Stantec

H2M architects + engineers
538 Broad Hollow Road
4th Floor East
Melville, NY 11747
P:(631)756-8000
F:(631)694-4122

DISNEY DESIGN GROUP, P.C. — ARCHITECTURE

LKB CONSULTING ENGINEERS

Cashin Associates, P.C.
ENGINEERING • PLANNING • CONSTRUCTION MANAGEMENT

MATRIXNEWORLD
Engineering Programs
Matrix New World Engineering, Land Surveying
Matrix Environmental Design, LLC
443 State Route 35, Second Floor
Eatontown, New Jersey 07724
(973) 590 - 5400
Tel: 732-588-2999
Fax: 973-240-1918
www.matrixnewco.com
STATE OF NEW YORK CERTIFICATE OF AUTHORIZATION No. 17-00061

SEAL

"ALTERATION OF THIS DOCUMENT EXCEPT BY A LICENSED PROFESSIONAL IS ILLEGAL"

THESE DOCUMENTS CONTAIN POTENTIALLY SENSITIVE INFORMATION AND SHALL BE USED FOR THEIR INTENDED PURPOSE. ONCE THE INTENDED PURPOSE HAS CEASED, THE DOCUMENTS SHALL BE DESTROYED IN A SECURE MANNER.

IT IS A VIOLATION OF STATE EDUCATION LAW FOR ANY PERSON, UNLESS UNDER THE DIRECTION OF A LICENSED ARCHITECT TO ALTER THIS DOCUMENT IN ANYWAY. ALTERATIONS MUST HAVE THE SEAL AFFIXED ALONG WITH A DESCRIPTION OF THE ALTERATIONS, DATE AND ARCHITECT'S SIGNATURE. COPYRIGHT © 2012

PHASE
90% SUBMISSION

Revisions

Number	Description	Date:
1		
2		
3		
4		
5		

Project Title

HEMPSTEAD LAKE STATE PARK

CONTRACT
NYSP
WORK ORDER: LI-022
CONTRACT: D004472
COA: 1290350/30377/33001/ PRK 4559

PROJECT #: NYSP-1702
DATE: MAY 2017
DESIGNED BY:
DRAWN BY:
CHECKED BY: REVIEWED BY:

SHEET TITLE
ENVIRONMENTAL EDUCATION AND RESILIENCY CENTER SITE PLAN

SHEET #
DSP-1.0

M:\Matrix LDS\jobs\HZM\LD17-154 - Hempstead Lake State Park\Dwg\Plot Sheets\Detailed Site Plans\Matrix-Detailed Site Plans.dwg Last Modified: Jul 25, 2017 - 4:14pm Plotted on: Jul 25, 2017 - 4:15pm By: cfahey

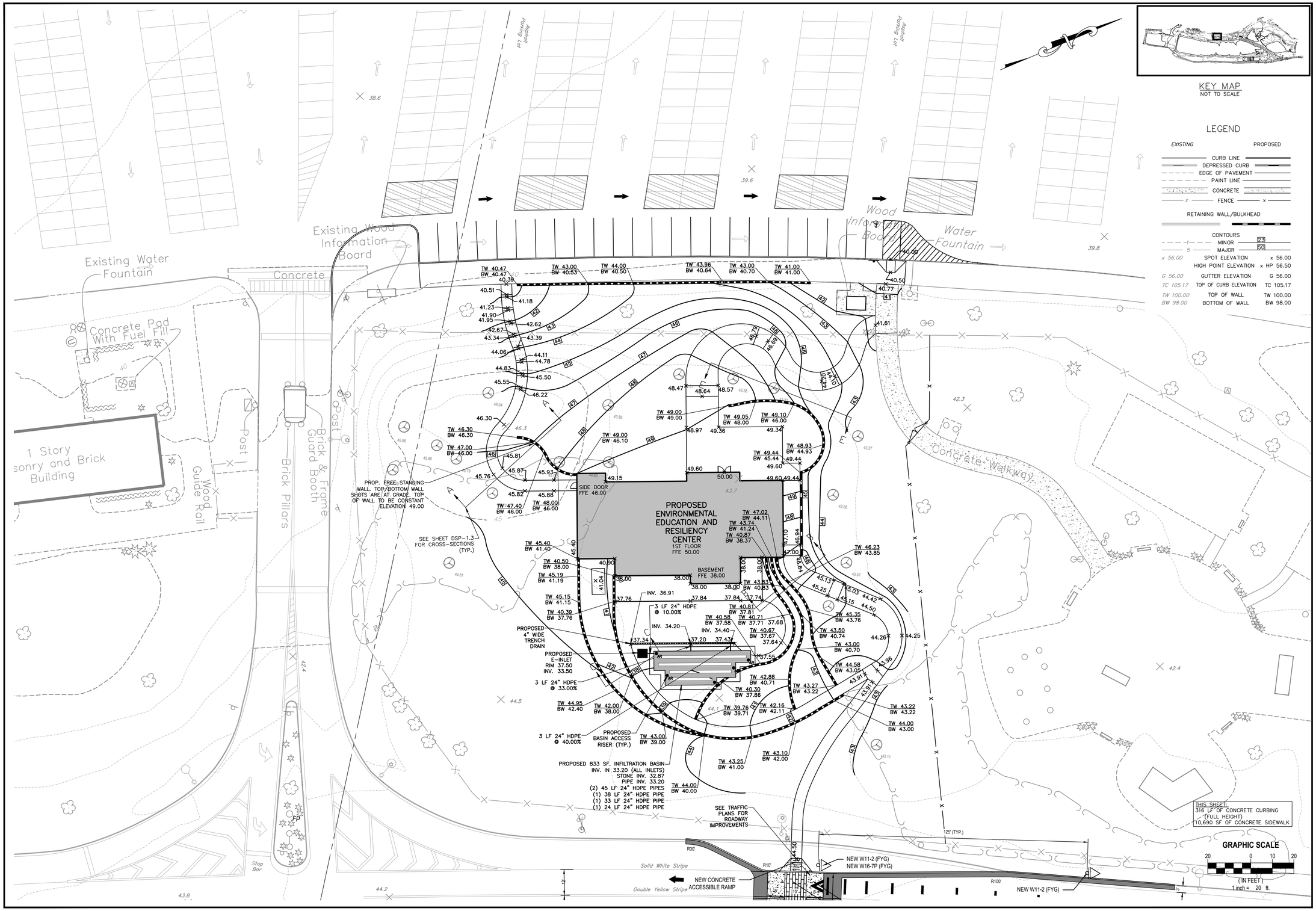

NY RISING

NEW YORK STATE — Parks, Recreation and Historic Preservation

CONSULTANTS:

Stantec

H2M architects + engineers
538 Broad Hollow Road
4th Floor East
Melville, NY 11747
P:(631)756-8000
F:(631)694-4122

DISNEY DEVOE CAMPO ARCHITECTURE

LKB CONSULTING ENGINEERS

Cashin Associates, P.C.
ENGINEERING - PLANNING - CONSTRUCTION MANAGEMENT

MATRIXNEWORLD Engineering Program
Matrix New World Engineering, Land Surveying
Joseph Lloyd Manor, Suite 102
443 State Route 35, Second Floor
Eatontown, New Jersey 07724
(732) 580 - 9400
Tel: 732-588-2999
Fax: 973-240-1918
www.matrixnewworld.com
STATE OF NEW YORK - CERTIFICATE OF AUTHORIZATION No. 17-00061

SEAL

"ALTERATION OF THIS DOCUMENT EXCEPT BY A LICENSED PROFESSIONAL IS ILLEGAL"

THESE DOCUMENTS CONTAIN POTENTIALLY SENSITIVE INFORMATION AND SHALL BE USED FOR THEIR INTENDED PURPOSE. ONCE THE INTENDED PURPOSE HAS CEASED, THE DOCUMENTS SHALL BE DESTROYED IN A SECURE MANNER.

IT IS A VIOLATION OF STATE EDUCATION LAW FOR ANY PERSON, UNLESS UNDER THE DIRECTION OF A LICENSED ARCHITECT TO ALTER THIS DOCUMENT IN ANYWAY. ALTERATIONS MUST HAVE THE SEAL AFFIXED ALONG WITH A DESCRIPTION OF THE ALTERATIONS, DATE AND ARCHITECT'S SIGNATURE. COPYRIGHT © 2012

PHASE
90% SUBMISSION

Revisions

Number	Description	Date:
1		
2		
3		
4		
5		

Project Title

HEMPSTEAD LAKE STATE PARK

CONTRACT
NYSP
WORK ORDER: LI-022
CONTRACT: D004472
COA: 1290350/30377/33001/ PRK 4559

PROJECT #: NYSP-1702
DATE: MAY 2017
DESIGNED BY:
DRAWN BY:
CHECKED BY:
REVIEWED BY:

SHEET TITLE
ENVIRONMENTAL EDUCATION AND RESILIENCY CENTER GRADING AND DRAINAGE

SHEET #
DSP-1.1

M:\Matrix LDS\jobs\KDM\LD17-154 - Hempstead Lake State Park\Dwg\Plot Sheets\Detailed Site Plans\Matrix-Detailed Site Plans.dwg Last Modified: Jul 25, 2017 - 4:14pm Plotted on: Jul 25, 2017 - 4:16pm By: cfaney

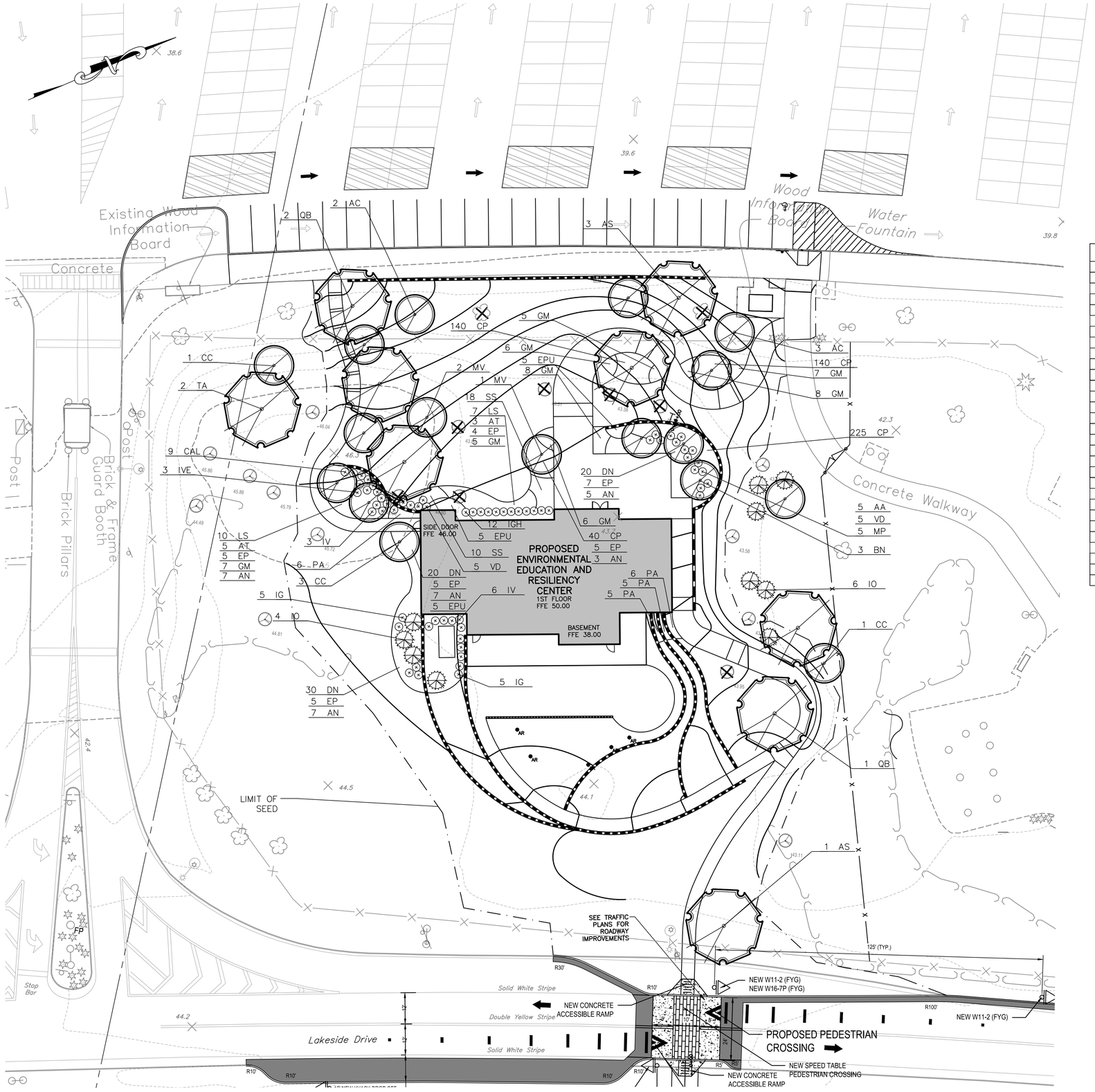

LEGEND

EXISTING		PROPOSED
	BOUNDARY LINE	
	LOT LINE	
	CURB LINE	
	DEPRESSED CURB	
	EDGE OF PAVEMENT	
	PAINT LINE	
	CONCRETE	
x	FENCE	x
	GUIDE RAIL	
	POST SIGN	
	RETAINING WALL/BULKHEAD	
	DECIDUOUS TREE	
	EVERGREEN TREE	
	ORNAMENTAL TREE	
	SHRUBS	

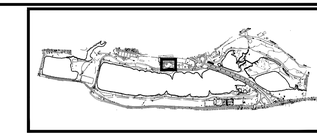

LANDSCAPING NOTES:

1. REFER TO DETAIL SHEET SD-10.0 FOR PLANTING DETAILS AND NOTES.

PROPOSED PLANT SCHEDULE

KEY	QTY	LATIN NAME	COMMON NAME	SIZE	NOTES
TREES					
AC	5	AMELANCHIER CANADENSIS	SHADBLOW SERVICEBERRY	6-7' HT B&B	MULTISTEM
AS	4	ACER SACCHARUM	SUGAR MAPLE	2-1/2-3" CAL.	FULL CROWN
BN	3	BETULA NIGRA	RIVER BIRCH	6-7' HT B&B	MULTISTEM
CC	5	CERICIS CANADENSIS	EASTERN RED BUD	2-1/2-3" CAL.	FULL CROWN
IO	10	ILEX OPACA	AMERICAN HOLLY	4-5' HT B&B	FULL CROWN
MV	3	MAGNOLIA VIRGINIANA	SWEET BAY MAGNOLIA	4-5' HT B&B	MULTISTEM
TA	2	TILIA AMERICANA	AMERICAN LINDEN	2-1/2-3" CAL.	FULL CROWN
QB	3	QUERCUS BICOLOR	SWAMP WHITE OAK	2-1/2-3" CAL.	FULL CROWN
SHRUBS					
AA	5	ARONIA ARBUTIFOLIA	CHOKEBERRY	24-36" HT/SPRD	AS SHOWN
CAL	9	CLETHRA ALNIFOLIA	SUMMER SWEET	24-36" HT/SPRD	AS SHOWN
IG	10	ILEX GLABRA	INKBERRY HOLLY	24-36" HT/SPRD	AS SHOWN
IGH	12	ILEX GLABRA "SHAMROCK"	SHAMROCK INKBERRY HOLLY	18-24" HT/SPRD	AS SHOWN
IV	9	ITEA VIRGINICA	VIRGINIA SWEETSPIRE	24-36" HT/SPRD	AS SHOWN
IVE	3	ILEX VERTICILLATTA	WINTER BERRY HOLLY	36-42" HT/SPRD	AS SHOWN
MP	5	MYRICA PENNSYVANICUM	BAYBERRY	24-36" HT/SPRD	AS SHOWN
VD	10	VIBURNUM DENTATUM	ARROWWOOD VIBURNUM	36-42" HT/SPRD	AS SHOWN
PERENNIALS/GRASSES/BULBS/VINES					
AN	29	ASTER NOVI-BELGII	NEW YORK ASTER	1 GAL.	24" O.C.
AT	8	ASCLEPIAS TUBEROSA	BUTTERFLY WEED	1 GAL.	24" O.C.
CP	545	CAREX PENNSYLVANICA	PENNSYLVANIA SEDGE	QUART	12" O.C.
DN	70	DESCHAMPSIA CESPITOSA	TUFTED HAIR GRASS	1 GAL.	24" O.C.
EP	31	ECHINACEA PURPUREA	PURPLE CONEFLOWER	1 GAL.	24" O.C.
EPU	15	EUTROCHIUM PURPUREUM	JOE PYE WEED	1 GAL.	24" O.C.
GM	44	GERANIUM MACULATAM	WILD GERANIUM	1 GAL.	24" O.C.
LS	17	LIASTRIS SPICATA	BLAZING STAR	1 GAL.	24" O.C.
PA	22	POLYSTICHUM ACROSTICHOIDES	CHRISTMAS FERN	1 GAL.	24" O.C.
SS	28	SCHIZACHYIUM SCOPARIUM "THE BLUES"	THE BLUES LITTLE BLUESTEM	1 GAL.	24" O.C.

GRAPHIC SCALE

20 0 10 20

(IN FEET)
1 inch = 20 ft.

NY RISING

NEW YORK STATE — Parks, Recreation and Historic Preservation

CONSULTANTS:

Stantec

H2M architects + engineers
538 Broad Hollow Road
4th Floor East
Melville, NY 11747
P:(631)756-8000
F:(631)694-4122

SIDNEY DESIGN GARTC ARCHITECTURE

LKB CONSULTING ENGINEERS

Cashin Associates, P.C.
ENGINEERING - PLANNING - ENVIRONMENTAL - CONSTRUCTION MANAGEMENT

MATRIXNEWORLD
Engineering Progress
Matrix New World Engineering, Land Surveying and Landscape Architecture, P.C.
1 Aldrin Road, Suite 100, Plainsboro
Edison/Iselin, New Jersey 07724
Tel: 732-588-2999
Fax: 973-240-1818
www.matrixneworld.com
HSE / DBE / SBE
STATE OF NEW YORK CERTIFICATE OF AUTHORIZATION No. 11-5808H

SEAL

"ALTERATION OF THIS DOCUMENT EXCEPT BY A LICENSED PROFESSIONAL IS ILLEGAL"

THESE DOCUMENTS CONTAIN POTENTIALLY SENSITIVE INFORMATION AND SHALL BE USED FOR THEIR INTENDED PURPOSE. ONCE THE INTENDED PURPOSE HAS CEASED, THE DOCUMENTS SHALL BE DESTROYED IN A SECURE MANNER.

IT IS A VIOLATION OF STATE EDUCATION LAW FOR ANY PERSON, UNLESS UNDER THE DIRECTION OF A LICENSED ARCHITECT TO ALTER THIS DOCUMENT IN ANYWAY. ALTERATIONS MUST HAVE THE SEAL AFFIXED ALONG WITH A DESCRIPTION OF THE ALTERATIONS, DATE AND ARCHITECT'S SIGNATURE. COPYRIGHT © 2012

PHASE
90% SUBMISSION

Revisions

Number	Description	Date:
1		
2		
3		
4		
5		

Project Title

HEMPSTEAD LAKE STATE PARK

CONTRACT
NYSP
WORK ORDER: LI-022
CONTRACT: D004472
COA: 1290350/30377/33001/ PRK 4559

PROJECT #: NYSP-1702
DATE: MAY 2017
DESIGNED BY:
DRAWN BY:
CHECKED BY:
REVIEWED BY:

SHEET TITLE
ENVIRONMENTAL EDUCATION AND RESILIENCY CENTER PLANTING PLAN

SHEET #
DSP-1.2

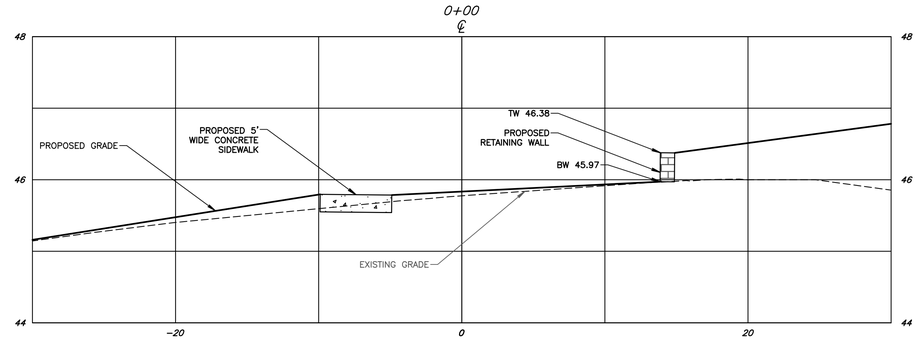

CROSS-SECTION A-A

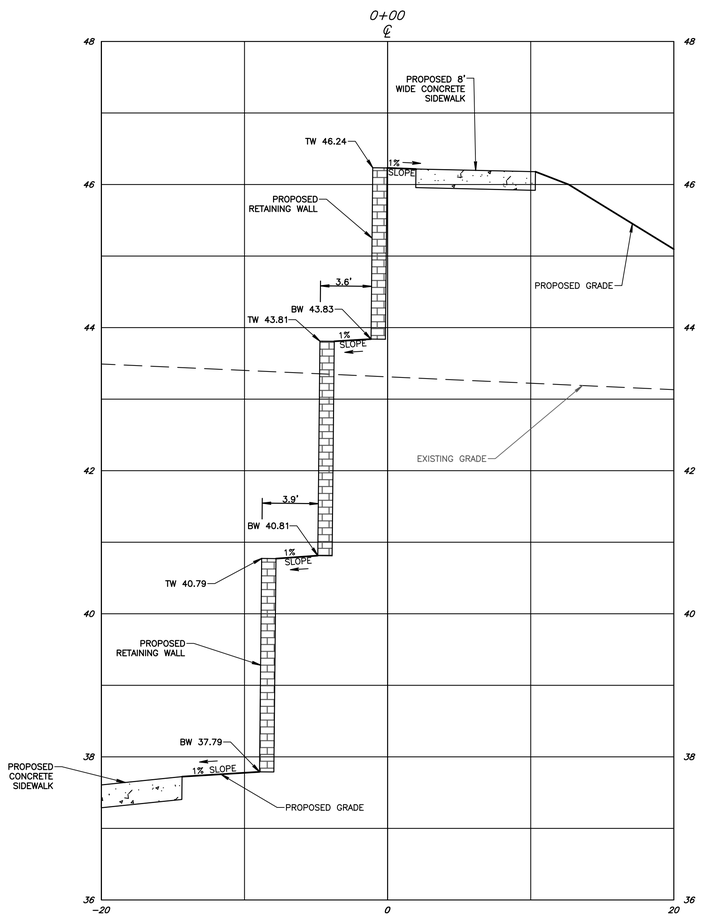

CROSS-SECTION B-B

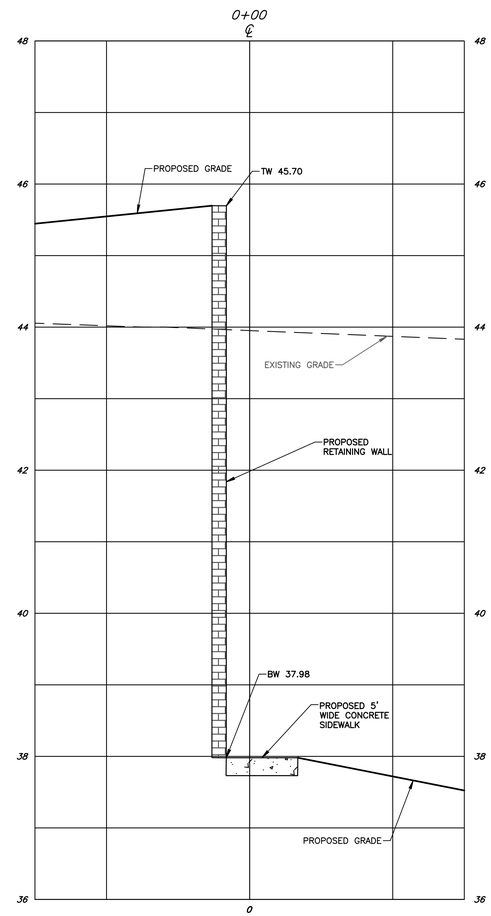

CROSS-SECTION C-C

5 4 3 2 1 0 5 10 15

HORIZONTAL GRAPHIC SCALE
1 inch=5 feet

1 0.5 0 1 2 3

VERTICAL GRAPHIC SCALE
1 inch=1 foot

NY RISING

NEW YORK STATE — Parks, Recreation and Historic Preservation

CONSULTANTS:

Stantec

H2M architects + engineers
538 Broad Hollow Road
4th Floor East
Melville, NY 11747
P:(631)756-8000
F:(631)694-4122

DISNEY DESIGN LAB PC

LKB CONSULTING ENGINEERS

Cashin Associates, P.C.
ENGINEERING - PLANNING - CONSTRUCTION MANAGEMENT

MATRIXNEWORLD
Engineering Program
Matrix New World Engineering, Land Surveying
Joint Venture with Parsons Brinckerhoff
443 State Route 35, Second Floor — Tel: 732-688-2999
Eatontown, New Jersey 07724 — Fax: 973-240-1918
(800) 580 - 585 — www.matrixneworld.com
STATE OF NEW YORK CERTIFICATE OF AUTHORIZATION No. 17-00061

SEAL

"ALTERATION OF THIS DOCUMENT EXCEPT BY A LICENSED PROFESSIONAL IS ILLEGAL"

THESE DOCUMENTS CONTAIN POTENTIALLY SENSITIVE INFORMATION AND SHALL BE USED FOR THEIR INTENDED PURPOSE. ONCE THE INTENDED PURPOSE HAS CEASED, THE DOCUMENTS SHALL BE DESTROYED IN A SECURE MANNER.

IT IS A VIOLATION OF STATE EDUCATION LAW FOR ANY PERSON, UNLESS UNDER THE DIRECTION OF A LICENSED ARCHITECT TO ALTER THIS DOCUMENT IN ANYWAY. ALTERATIONS MUST HAVE THE SEAL AFFIXED ALONG WITH A DESCRIPTION OF THE ALTERATIONS, DATE AND ARCHITECT'S SIGNATURE. COPYRIGHT © 2012

PHASE
90% SUBMISSION

Revisions

Number	Description	Date:
1		
2		
3		
4		
5		

Project Title

HEMPSTEAD LAKE STATE PARK

CONTRACT
NYSP
WORK ORDER: LI-022
CONTRACT: D004472
COA: 1290350/30377/33001/ PRK 4559

PROJECT #: NYSP-1702
DATE: MAY 2017
DESIGNED BY:
DRAWN BY:
CHECKED BY: REVIEWED BY:

SHEET TITLE
ENVIRONMENTAL EDUCATION AND RESILIENCY CENTER CROSS-SECTIONS

SHEET #
DSP-1.3

M:\Matrix LDS\jobs\HZM\LD17-154 - Hempstead Lake State Park\Dwg\Plot Sheets\Detailed Site Plans\Matrix-Detailed Site Plans.dwg Last Modified: Jul 25, 2017 - 4:14pm Plotted on: Jul 25, 2017 - 4:18pm By: clarney

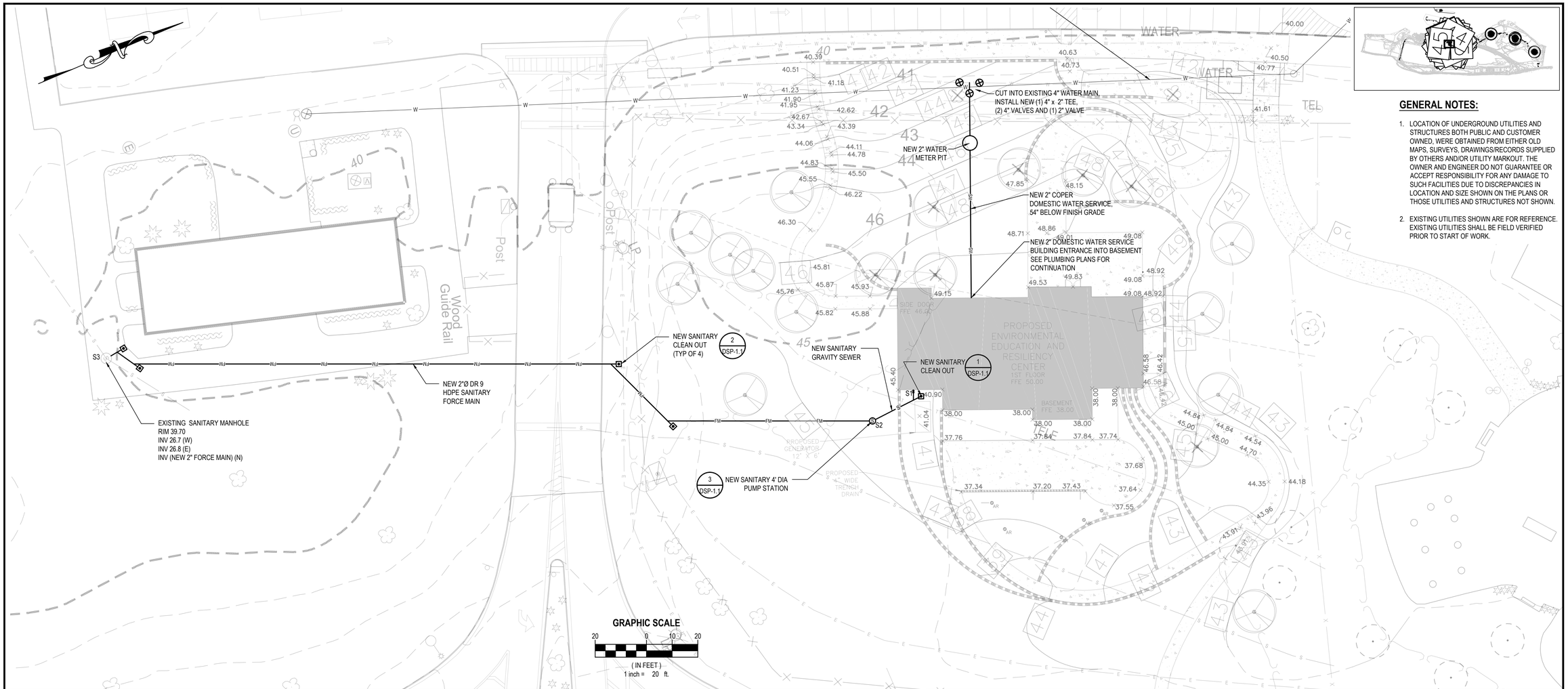

GENERAL NOTES:

1. LOCATION OF UNDERGROUND UTILITIES AND STRUCTURES BOTH PUBLIC AND CUSTOMER OWNED, WERE OBTAINED FROM EITHER OLD MAPS, SURVEYS, DRAWINGS/RECORDS SUPPLIED BY OTHERS AND/OR UTILITY MARKOUT. THE OWNER AND ENGINEER DO NOT GUARANTEE OR ACCEPT RESPONSIBILITY FOR ANY DAMAGE TO SUCH FACILITIES DUE TO DISCREPANCIES IN LOCATION AND SIZE SHOWN ON THE PLANS OR THOSE UTILITIES AND STRUCTURES NOT SHOWN.
2. EXISTING UTILITIES SHOWN ARE FOR REFERENCE. EXISTING UTILITIES SHALL BE FIELD VERIFIED PRIOR TO START OF WORK.

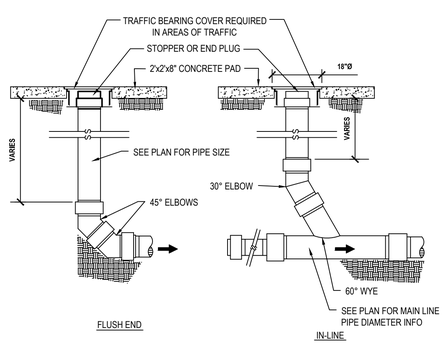

1 Sanitary Cleanout (Gravity)
NTS (333923.00 SUFF1) (MOD)

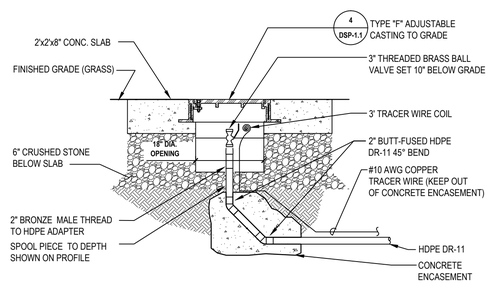

2 2-Inch Ø Terminal Flushing Cleanout Schematic for Low Pressure Sewer
SCALE: NTS

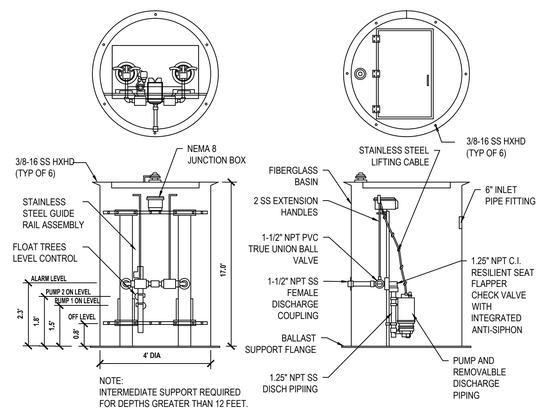

3 Sanitary Pump Station
NTS

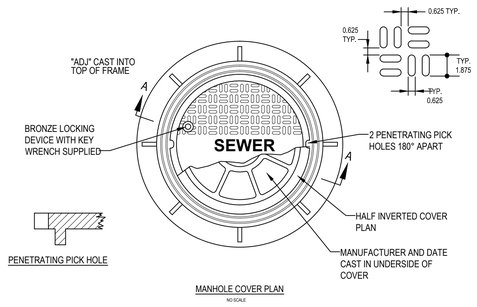

NOTES:

1. MATERIAL GRAY CAST IRON PER ASTM A-48 (LATEST REVISION CLASS 30 CAMBELL FOUNDRY CO. HARRISON, N.J. 07029 (OR EQUAL) PATTERN NO. 17341010
2. CASTING SHALL BE PAINTED IN ACCORDANCE WITH SPECIFICATIONS

4 Type "F" Adjustable Manhole Casting
NTS

PROGRAM CONSULTANT:

Living with the BAY

CLIENTS:

NEW YORK STATE OF OPPORTUNITY. Parks, Recreation and Historic Preservation

Governor's Office of Storm Recovery

PROJECT MANAGER:

Stantec

LEAD LANDSCAPE ARCHITECTS + ARCHITECTS:

H2M architects + engineers
538 Broad Hollow Road
4th Floor East
Melville, NY 11747
P:(631)756-8000
F:(631)694-4122

CERTIFIED ARBORISTS + LANDSCAPE ARCHITECTS:

GIBNEY DESIGN LA & PC LANDSCAPE ARCHITECTURE PL

STRUCTURAL ENGINEERS:

LKB CONSULTING ENGINEERS

CIVIL ENGINEERS + LANDSCAPE ARCHITECTS:

Cashin Associates, P.C.
ENGINEERING - PLANNING - CONSTRUCTION MANAGEMENT

LANDSCAPE ARCHITECTS:

MATRIXNEWORLD Engineering Program
Matrix New World Engineering, Land Surveying
Cashin Associates, P.C.
442 State Route 35, Second Floor
Eatontown, New Jersey 07724
Tel: 732-588-2999
Fax: 973-240-1818
WBE / DBE / SBE
www.matrixnewworld.com
NEW JERSEY CERTIFICATE OF AUTHORIZATION No. 24GA27982000

SEAL

"ALTERATION OF THIS DOCUMENT EXCEPT BY A LICENSED PROFESSIONAL IS ILLEGAL"

THESE DOCUMENTS CONTAIN POTENTIALLY SENSITIVE INFORMATION AND SHALL BE USED FOR THEIR INTENDED PURPOSE. ONCE THE INTENDED PURPOSE HAS CEASED, THE DOCUMENTS SHALL BE DESTROYED IN A SECURE MANNER.

IT IS A VIOLATION OF STATE EDUCATION LAW FOR ANY PERSON, UNLESS UNDER THE DIRECTION OF A LICENSED ARCHITECT TO ALTER THIS DOCUMENT IN ANYWAY. ALTERATIONS MUST HAVE THE SEAL AFFIXED ALONG WITH A DESCRIPTION OF THE ALTERATIONS, DATE AND ARCHITECT'S SIGNATURE. COPYRIGHT © 2012

PHASE
90% SUBMISSION

Revisions

Number	Description	Date:
1		
2		
3		
4		
5		

Project Title

HEMPSTEAD LAKE STATE PARK

90% SUBMISSION

CONTRACT
NYSP
WORK ORDER: LI-022
CONTRACT: D004472
COA: 1290350/30377/33001/ PRK 4559

PROJECT # NYSP-1702
DATE: JULY 2017
DESIGNED BY:
DRAWN BY:
CHECKED BY: REVIEWED BY:

SHEET TITLE
ENVIRONMENTAL EDUCATION & RESILIENCY CENTER WATER & SANITARY PLAN

SHEET #
DSP-1.4

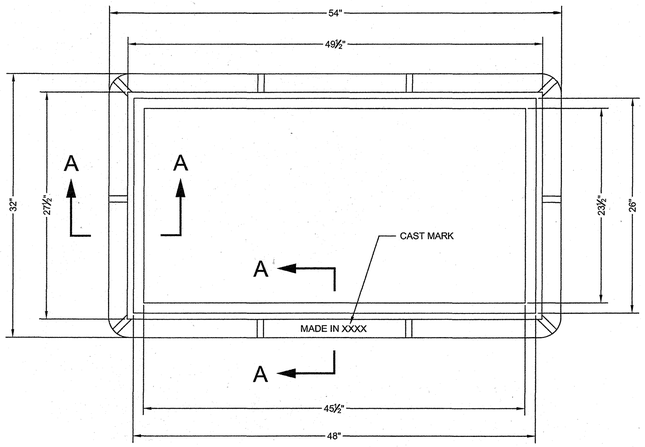

PLAN

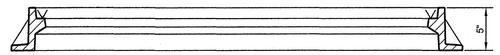

SECTION

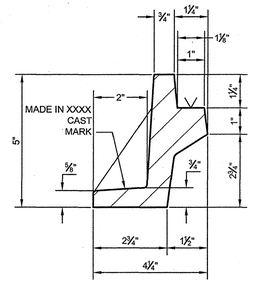

SECTION A-A

NOTES:

(1) MATERIAL: GRAY CAST IRON ASTM A-48 CLASS 35B. MINIMUM WEIGHT OF FRAME IS 275 LBS.

(2) DESIGN LOADING: HS20-44 HIGHWAY LOADING.

(3) ALL FRAMES SHALL HAVE THE MANUFACTURER'S IDENTIFICATION, CAST DATE OR HEAT NUMBER AND COUNTRY OF ORIGIN INTEGRALLY CAST ON INDIVIDUAL PIECES AT THE TIME OF MANUFACTURE IN ACCORDANCE WITH THE DEP SPECIFICATION.

INLET FRAME DETAIL

NOT TO SCALE

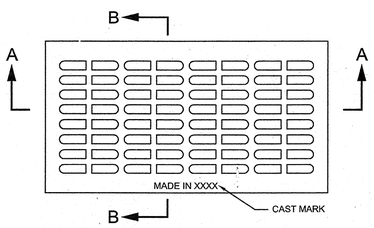

PLAN OF GRATING

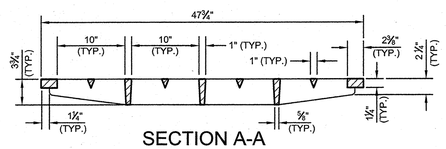

SECTION A-A

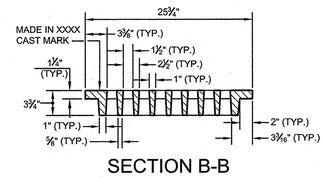

SECTION B-B

INLET GRATE DETAIL

NOT TO SCALE

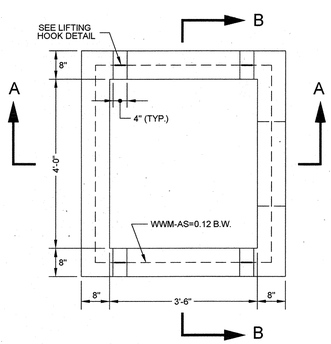

PLAN

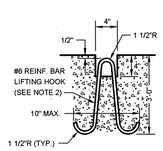

LIFTING HOOK DETAIL
(N.T.S.)

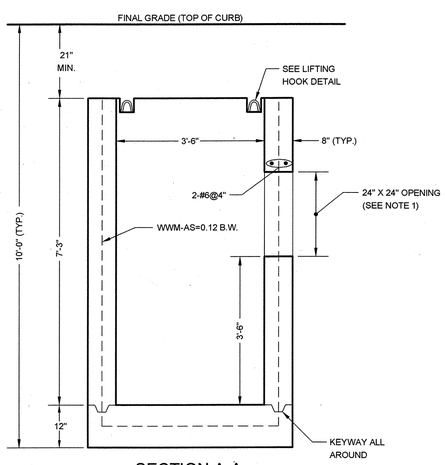

SECTION A-A

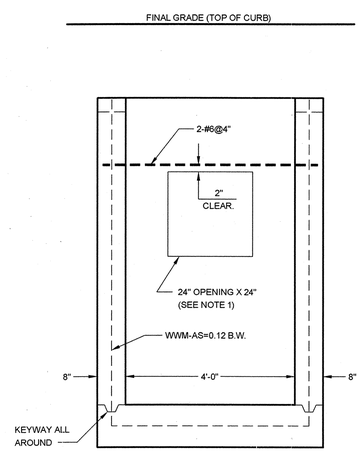

SECTION B-B

NOTES:

(1) LOCATION OF OPENING SHALL BE DETERMINED PRIOR TO MANUFACTURE OF BASIN BY LOCATION AND ANGLE OF BASIN CONNECTION REQUIRED DUE TO FIELD CONDITIONS AND OPENING SHALL BE PLACED IN THE PROPER WALL AT THE TIME OF MANUFACTURE.

(2) LIFTING HOOKS SHALL BE LOCATED IN THE SECTION AS PER MANUFACTURERS RECOMMENDATIONS AND GROUTED PRIOR TO BACKFILLING. (FOUR (4) LIFTING HOOKS SHALL BE PROVIDED FOR EACH SECTION AND SHALL BE PLACED SYMMETRICALLY AND IN SUCH A MANNER AS TO PROVIDE FOR THE EVEN LIFTING OF THE SECTION.)

(3) CONCRETE IS TO BE CLASS 40 AND 5% AIR ENTRAINED. REBARS-GRADE 60. WWM-FS=65,000 PSI.

CATCH BASIN STRUCTURE DETAIL

NOT TO SCALE

NOTE:
CLASS I MATERIAL – 3/4" MODIFIED CRUSHED STONE
CLASS II MATERIAL – COARSE SAND AND GRAVEL

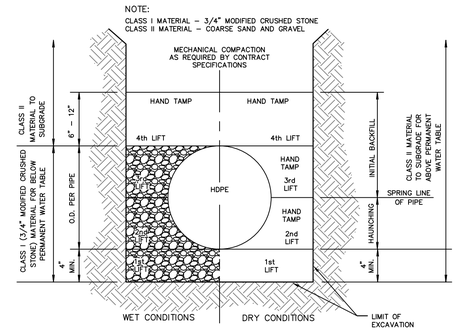

HDPE BEDDING DETAIL

NOT TO SCALE

D	a	b
8"	20"	20"
10"	19"	19"
12"	18"	18"
15"	16 1/2"	16 1/2"
18"	15"	15"
24"	12"	12"
30"	12"	6"

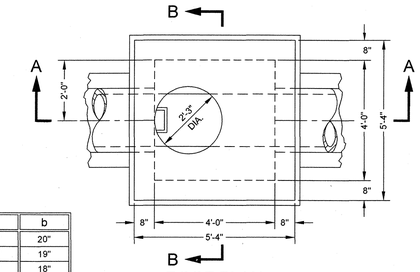

ROOF PLAN

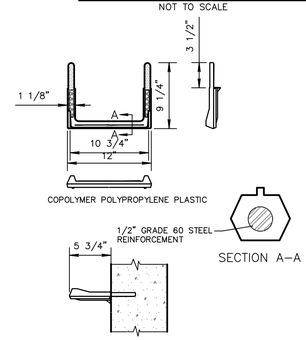

SECTION A–A

POLYPROPYLENE MANHOLE STEPS

NOT TO SCALE

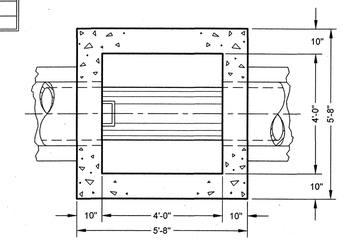

SECTION C-C

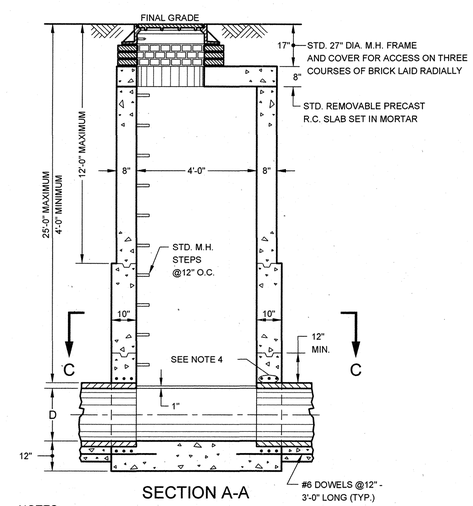

SECTION A-A

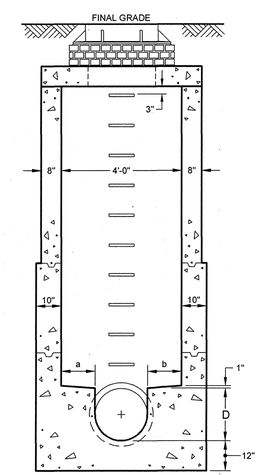

SECTION B-B

NOTES:

(1) WHEN LEGAL GRADE IS BELOW FINAL GRADE SEE SEWER STANDARD NO. 38.

(2) KEYED CONSTRUCTION JOINTS ARE REQUIRED BETWEEN ANY SUCCESSIVE POURS.

(3) CONCRETE IS TO BE CLASS 40. REBARS-GRADE 60.

(4) FOR ALL PIPE SEWERS EIGHTEEN (18) INCHES IN DIAMETER AND GREATER, ADD 3-#6@3" ABOVE AND BELOW THE PIPE.

MANHOLE STRUCTURE DETAIL

NOT TO SCALE

NY RISING

NEW YORK STATE — Parks, Recreation and Historic Preservation

CONSULTANTS:

Stantec

H2M architects + engineers
538 Broad Hollow Road
4th Floor East
Melville, NY 11747
P:(631)756-8000
F:(631)694-4122

SIDNEY DESIGN GA & PC ARCHITECTS

LKB CONSULTING ENGINEERS

Cashin Associates, P.C.
ENGINEERING - PLANNING - ENVIRONMENTAL - CONSTRUCTION MANAGEMENT

MATRIXNEWORLD
Engineering Progress
Matrix New World Engineering, Land Surveying and Landscape Architecture, P.C.
100 Metro Park South, 3rd Floor
Edison, New Jersey 07724
NSE / GSE / SSE
Tel: 732-588-2999
Fax: 973-240-1818
www.matrixnewworld.com
STATE OF NEW YORK CERTIFICATE OF AUTHORIZATION No. 17-5826861

SEAL

"ALTERATION OF THIS DOCUMENT EXCEPT BY A LICENSED PROFESSIONAL IS ILLEGAL"

THESE DOCUMENTS CONTAIN POTENTIALLY SENSITIVE INFORMATION AND SHALL BE USED FOR THEIR INTENDED PURPOSE. ONCE THE INTENDED PURPOSE HAS CEASED, THE DOCUMENTS SHALL BE DESTROYED IN A SECURE MANNER.

IT IS A VIOLATION OF STATE EDUCATION LAW FOR ANY PERSON, UNLESS UNDER THE DIRECTION OF A LICENSED ARCHITECT TO ALTER THIS DOCUMENT IN ANYWAY. ALTERATIONS MUST HAVE THE SEAL AFFIXED ALONG WITH A DESCRIPTION OF THE ALTERATIONS, DATE AND ARCHITECT'S SIGNATURE. COPYRIGHT © 2012

PHASE
90% SUBMISSION

Revisions

Number	Description	Date:
1		
2		
3		
4		
5		

Project Title

HEMPSTEAD LAKE STATE PARK

CONTRACT
NYSP
WORK ORDER: LI-022
CONTRACT: D004472
COA: 1290350/30377/33001/ PRK 4559

PROJECT # NYSP-1702
DATE: MAY 2017
DESIGNED BY:
DRAWN BY:
CHECKED BY: REVIEWED BY:

SHEET TITLE
ENVIRONMENTAL EDUCATION AND RESILIENCY CENTER SITE DETAILS

SHEET **SD-1.0**

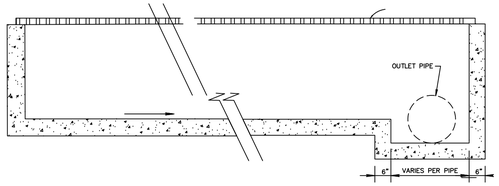

DETAIL TRENCH DRAIN DROP

NOT TO SCALE

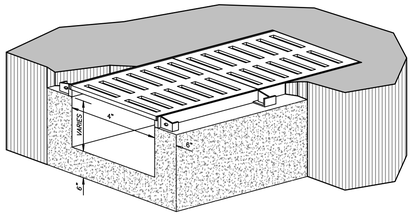

NOTES:
1. CAMPBELL FOUNDRY COMPANY GRATE NO. 4528. USE COVER NO. 4503 WHERE NEEDED.
2. 48" STANDARD FRAME LENGTH,
4. CONCRETE FOR CHANNEL CONSTRUCTION TO BE AIR ENTRAINED CLASS 'B' PORTLAND CEMENT HAVING A 28-DAY STRENGTH OF 4,000 P.S.I.
5. TRANSVERSE EXPANSION JOINTS SHALL BE CONSTRUCTED 20' ON CENTERS USING 1/2" THICK PREFORMED BITUMINOUS JOINT FILLER. TRANSVERSE GROOVES (CONSTRUCTION JOINTS) SHALL BE STRUCK MIDWAY BETWEEN EXPANSION JOINTS.

TRENCH DRAIN

NOT TO SCALE

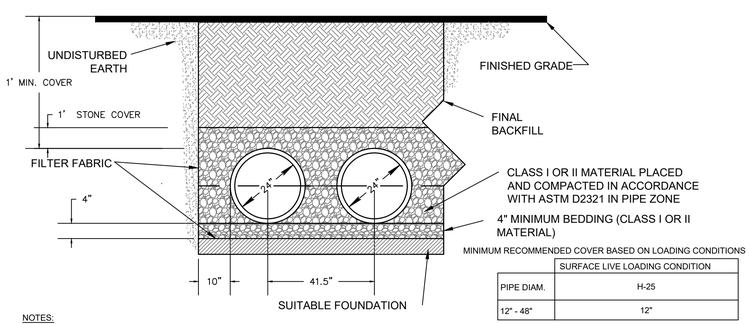

MINIMUM RECOMMENDED COVER BASED ON LOADING CONDITIONS

	SURFACE LIVE LOADING CONDITION
PIPE DIAM.	H-25
12" - 48"	12"

NOTES:

1. ALL REFERENCES TO CLASS I OR CLASS II MATERIAL ARE PER ASTM D2321 "STANDARD PRACTICE FOR UNDERGROUND INSTALLATION OF THERMOPLASTIC PIPE FOR SEWERS AND OTHER GRAVITY FLOW APPLICATIONS", LATEST EDITION.

2. ALL RETENTION AND DETENTION SYSTEMS SHALL BE INSTALLED IN ACCORDANCE WITH ASTM D2321, LATEST EDITION AND THE MANUFACTURER'S PUBLISHED INSTALLATION GUIDELINES.

3. MEASURES SHOULD BE TAKEN TO PREVENT THE MIGRATION OF NATIVE FINES INTO THE BACKFILL MATERIAL, WHEN REQUIRED. SEE ASTM D2321.

4. FILTER FABRIC: A GEOTEXTILE FABRIC MAY BE USED AS SPECIFIED BY THE ENGINEER TO PREVENT THE MIGRATION OF FINES FROM THE NATIVE SOIL INTO THE SELECT BACKFILL MATERIAL.

5. FOUNDATION: WHERE THE TRENCH BOTTOM IS UNSTABLE, THE CONTRACTOR SHALL EXCAVATE TO A DEPTH REQUIRED BY THE ENGINEER AND REPLACE WITH SUITABLE MATERIAL AS SPECIFIED BY THE ENGINEER. AS AN ALTERNATIVE AND AT THE DISCRETION OF THE DESIGN ENGINEER, THE TRENCH BOTTOM MAY BE STABILIZED USING A GEOTEXTILE MATERIAL.

6. BEDDING: SUITABLE MATERIAL SHALL BE CLASS I OR II. THE CONTRACTOR SHALL PROVIDE DOCUMENTATION FOR MATERIAL SPECIFICATION TO ENGINEER. UNLESS OTHERWISE NOTED BY THE ENGINEER, UNLESS OTHERWISE NOTED BY THE ENGINEER, MINIMUM BEDDING THICKNESS SHALL BE 4" FOR 4"-24"; 6" FOR 30"-60".

7. INITIAL BACKFILL: SUITABLE MATERIAL SHALL BE CLASS I OR II IN THE PIPE ZONE EXTENDING NOT LESS THAN 6" ABOVE CROWN OF PIPE. THE CONTRACTOR SHALL PROVIDE DOCUMENTATION FOR MATERIAL SPECIFICATION TO ENGINEER. MATERIAL SHALL BE INSTALLED AS REQUIRED IN ASTM D2321, LATEST EDITION.

8. MINIMUM COVER: MINIMUM COVER OVER ALL RETENTION/DETENTION SYSTEMS IN NON-TRAFFIC APPLICATIONS (GRASS OR LANDSCAPE AREAS) IS 12" FROM TOP OF PIPE TO GROUND SURFACE. ADDITIONAL COVER MAY BE REQUIRED TO PREVENT FLOATATION. FOR TRAFFIC APPLICATION, MINIMUM COVER IS 12" UP TO 36" DIAMETER PIPE AND 24" OF COVER FOR 42"-60" DIAMETER PIPE, MEASURED FROM TOP OF PIPE TO BOTTOM OF FLEXIBLE PAVEMENT OR TO TOP OF RIGID PAVEMENT..

UNDERGROUND INFILTRATION BASIN HDPE PARALLEL PIPE INSTALLATION

NOT TO SCALE

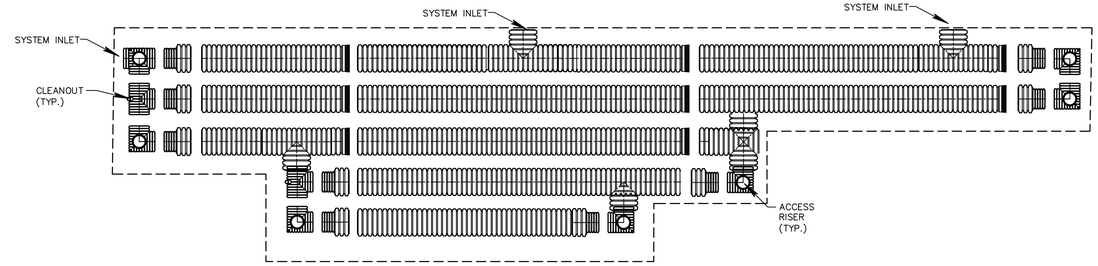

GENERAL NOTES:
1. DIAGRAM FOR ILLUSTRATIVE PURPOSES ONLY. FINAL DESIGN TO BE PROVIDED AND MANUFACTURED BY ADS OR APPROVED EQUAL.
2. NOT ALL PIPES AND COMPONENTS SHOWN.

PROPOSED INFILTRATION PIPE SYSTEM SCHEMATIC

NOT TO SCALE

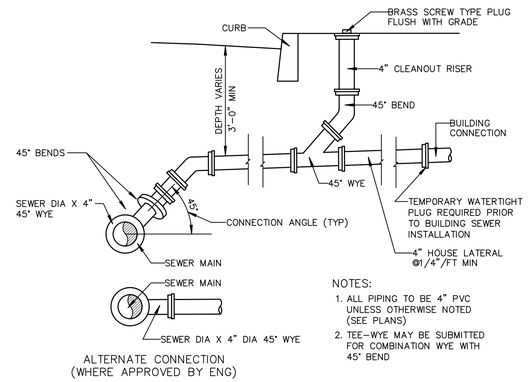

NOTES:
1. ALL PIPING TO BE 4" PVC UNLESS OTHERWISE NOTED (SEE PLANS)
2. TEE-WYE MAY BE SUBMITTED FOR COMBINATION WYE WITH 45° BEND

STANDARD SANITARY HOUSE LATERAL

NOT TO SCALE

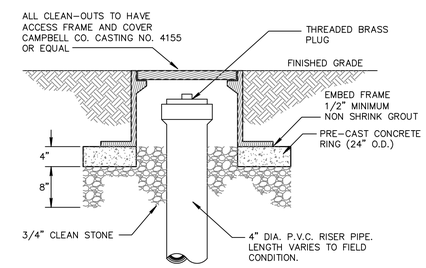

SANITARY SEWER CLEAN-OUT FRAME AND COVER

NOT TO SCALE

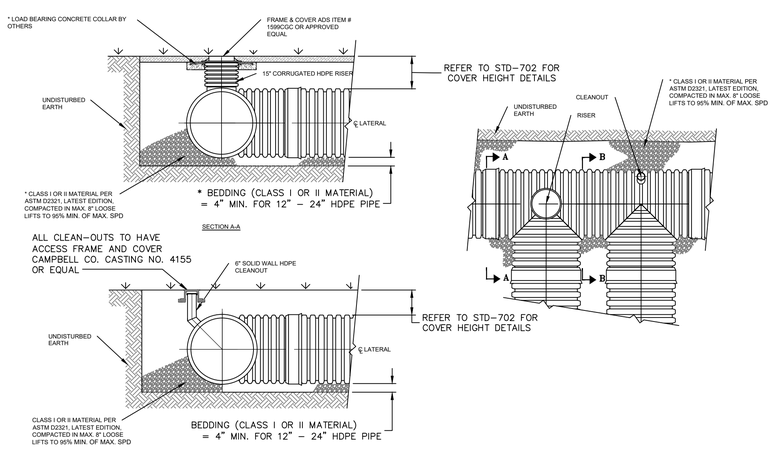

* CLASS I BACKFILL REQUIRED AROUND 60" DIAMETER FITTINGS

* LOAD BEARING CONCRETE COLLAR SHALL BE CONSTRUCTED IN TRAFFIC AREAS SUCH THAT THE LIVE LOAD IS TRANSMITTED TO THE SURROUNDING SOIL AND NOT DIRECTLY TO THE RISER.

GENERAL NOTES:
1. DIAGRAM FOR ILLUSTRATIVE PURPOSES ONLY. FINAL DESIGN TO BE PROVIDED AND MANUFACTURED BY ADS OR APPROVED EQUAL.
2. NOT ALL PIPES AND COMPONENTS SHOWN.

PROPOSED INFILTRATION PIPE SYSTEM ACCESS RISER AND CLEAN OUT SCHEMATIC

NOT TO SCALE

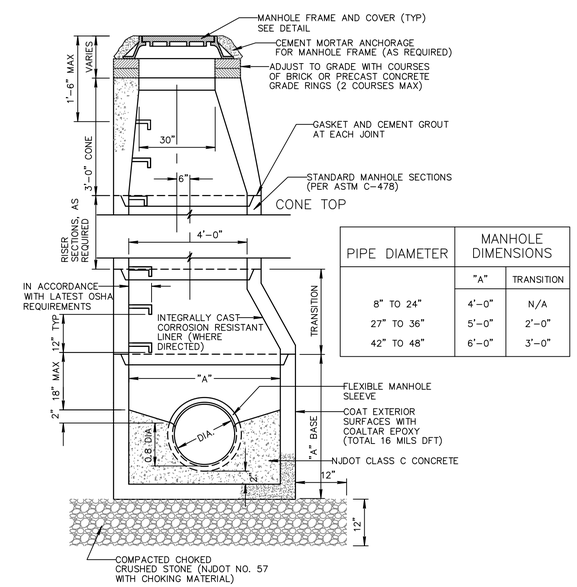

PIPE DIAMETER	MANHOLE DIMENSIONS	
	"A"	TRANSITION
8" TO 24"	4'-0"	N/A
27" TO 36"	5'-0"	2'-0"
42" TO 48"	6'-0"	3'-0"

SANITARY PRECAST CONCRETE MANHOLE

NOT TO SCALE

NY RISING

NEW YORK STATE Parks, Recreation and Historic Preservation

CONSULTANTS:

Stantec

H2M architects + engineers
538 Broad Hollow Road
4th Floor East
Melville, NY 11747
P:(631)756-8000
F:(631)694-4122

SIDNEY DESIGN LA & PC

LKB CONSULTING ENGINEERS

Cashin Associates, P.C.

MATRIXNEWORLD Engineering Progress

SEAL

"ALTERATION OF THIS DOCUMENT EXCEPT BY A LICENSED PROFESSIONAL IS ILLEGAL"

THESE DOCUMENTS CONTAIN POTENTIALLY SENSITIVE INFORMATION AND SHALL BE USED FOR THEIR INTENDED PURPOSE. ONCE THE INTENDED PURPOSE HAS CEASED, THE DOCUMENTS SHALL BE DESTROYED IN A SECURE MANNER.

IT IS A VIOLATION OF STATE EDUCATION LAW FOR ANY PERSON, UNLESS UNDER THE DIRECTION OF A LICENSED ARCHITECT TO ALTER THIS DOCUMENT IN ANYWAY. ALTERATIONS MUST HAVE THE SEAL AFFIXED ALONG WITH A DESCRIPTION OF THE ALTERATIONS, DATE AND ARCHITECT'S SIGNATURE. COPYRIGHT © 2012

PHASE
90% SUBMISSION

Revisions

Number	Description	Date:
1		
2		
3		
4		
5		

Project Title

HEMPSTEAD LAKE STATE PARK

CONTRACT
NYSP
WORK ORDER: LI-022
CONTRACT: D004472
COA: 1290350/30377/33001/ PRK 4559

PROJECT # NYSP-1702
DATE: MAY 2017
DESIGNED BY:
DRAWN BY:
CHECKED BY: REVIEWED BY:

SHEET TITLE
ENVIRONMENTAL EDUCATION AND RESILIENCY CENTER SITE DETAILS

SHEET **SD-2.0**

NOTES:

1. ALL SIGNS SHALL BE MINIMUM 18 GUAGE STEEL WITH BAKED ON ENAMEL FINISH. PROVIDE WITH PRE-PUNCHED MOUNTING HOLES.
2. POSTS: 2" STEEL U-CHANNEL BREAKAWAY POST.
3. SIGNS AND POSTS SHALL BE IN ACCORDANCE WITH LOCAL ORDINANCE AND MEET THE REQUIREMENTS OF THE MANUAL ON UNIFORM TRAFFIC CONTROL DEVICES, LATEST EDITION.

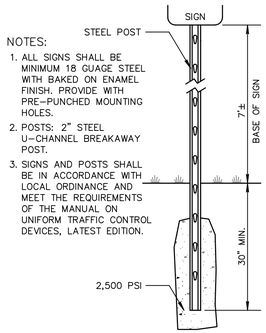

SIGN POST

NOT TO SCALE

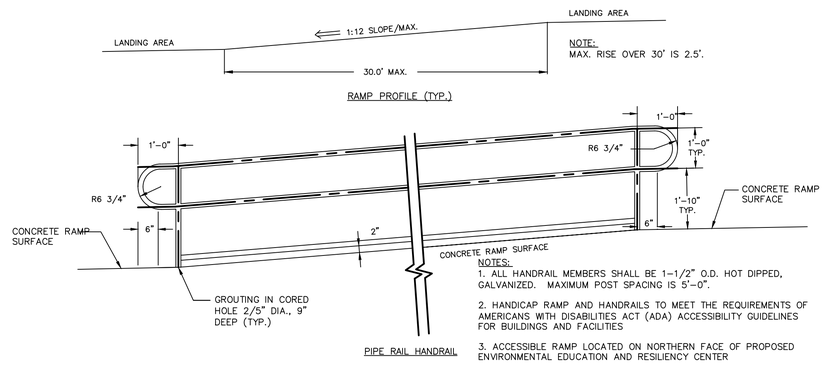

NOTES:

1. ALL HANDRAIL MEMBERS SHALL BE 1-1/2" O.D. HOT DIPPED, GALVANIZED. MAXIMUM POST SPACING IS 5'-0".
2. HANDICAP RAMP AND HANDRAILS TO MEET THE REQUIREMENTS OF AMERICANS WITH DISABILITIES ACT (ADA) ACCESSIBILITY GUIDELINES FOR BUILDINGS AND FACILITIES
3. ACCESSIBLE RAMP LOCATED ON NORTHERN FACE OF PROPOSED ENVIRONMENTAL EDUCATION AND RESILIENCY CENTER

ACCESSIBLE RAMP WITH HANDRAIL

NOT TO SCALE

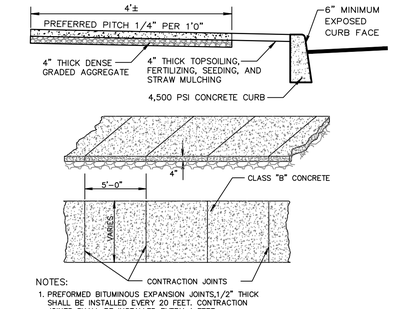

NOTES:

1. PREFORMED BITUMINOUS EXPANSION JOINTS,1/2" THICK SHALL BE INSTALLED EVERY 20 FEET. CONTRACTION JOINTS SHALL BE INSTALLED EVERY 4 FEET.
2. CONCRETE SHALL BE CLASS "B" PORTLAND CEMENT HAVING A 28 DAY STRENGTH OF 4500 PSI.
3. HANDICAP RAMPS SHALL HAVE A LIGHT BROOM FINISH WITH THE STRIATIONS PERPENDICULAR TO TRAFFIC.
4. PROVIDE 4" THICK 3/4" QUARRY PROCESSED STONE OR 3/4" RECYCLED CONCRETE AGGREGATE CONFORMING TO NYDOT SPECIFICATIONS.
5. CONTRACTOR TO COORDINATE JOINTING WITH ARCHITECT.

CONCRETE SIDEWALK

NOT TO SCALE

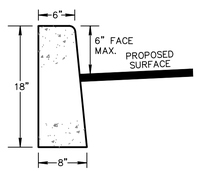

NOTES:

1. CONCRETE FOR CURB CONSTRUCTION TO BE A.E. CLASS B PORTLAND CEMENT CONCRETE HAVING A 28-DAY STRENGTH OF 4,000 P.S.I.
2. 1/2" THICK PREFORMED BITUMINOUS JOINT FILLER SHALL BE USED TO CONSTRUCT EXPANSION JOINTS AT 20' O.C.
3. CONSTRUCTION JOINTS SHALL BE CONSTRUCTED AT 20' O.C. AND OFFSET 10' O.C. FROM EXPANSION JOINTS

CONCRETE CURB

NOT TO SCALE

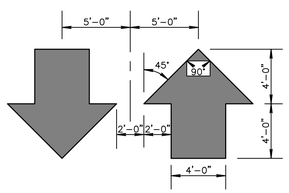

PAVEMENT MARKINGS

NOT TO SCALE

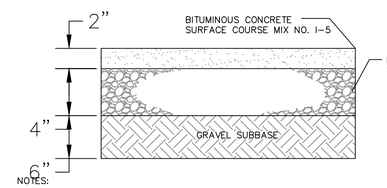

NOTES:

1. SUBBASE SHALL BE FIRM AND APPROVED BY THE ENGINEER OR HIS/HER REPRESENTATIVE PRIOR TO PAVING.
2. ALL CONSTRUCTION METHODS AND MATERIALS SHALL CONFORM TO NY DOT 1989 STANDARDS, SPECIFICATIONS AND INSPECTIONS.
3. THE CONTRACTOR SHALL PREPARE, THE EXISTING SURFACE INCLUDING, BUT NOT LIMITED TO, REMOVAL OF DEBRIS AND VEGETATION, PROVIDING POWER AND HAND BROOMING AND ADJUSTING MANHOLES AND WATER BOXES, ALL TO THE SATISFACTION OF THE ENGINEER.
4. THE CONTRACTOR SHALL PAVE INTERSECTIONS TO THE POINT OF TANGENCY OF THE RADIUS RETURN OR AS DIRECTED BY THE ENGINEER.

ASPHALT PAVEMENT DETAIL

NOT TO SCALE

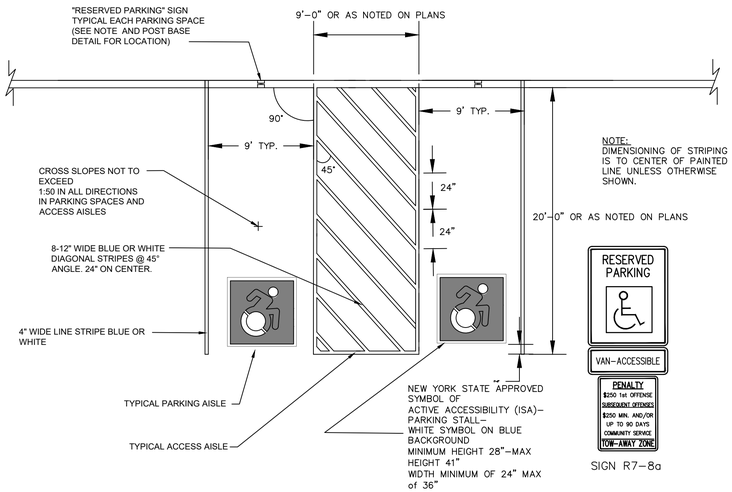

SIGN R7-8a

SIGN R7-8

HANDICAP PARKING STALLS

NOT TO SCALE

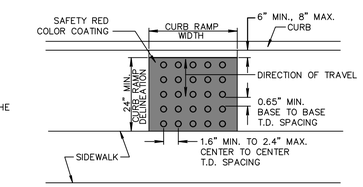

PLAN VIEW

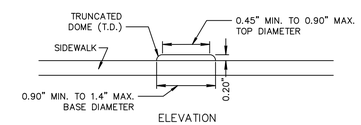

ELEVATION

NOTES:

1. DETECTABLE WARNING SURFACE SHALL BE SAFETY RED COLOR ON CONCRETE OR 70% COLOR CONTRAST FOR OTHER SURFACES SUCH AS BRICK.
2. CONTRACTOR SHALL PROVIDE A DETECTABLE WARNING SURFACE SUBMITTAL TO PROJECT ENGINEER FOR APPROVAL PRIOR TO. CONSTRUCTION.

DETECTABLE WARNING SURFACE

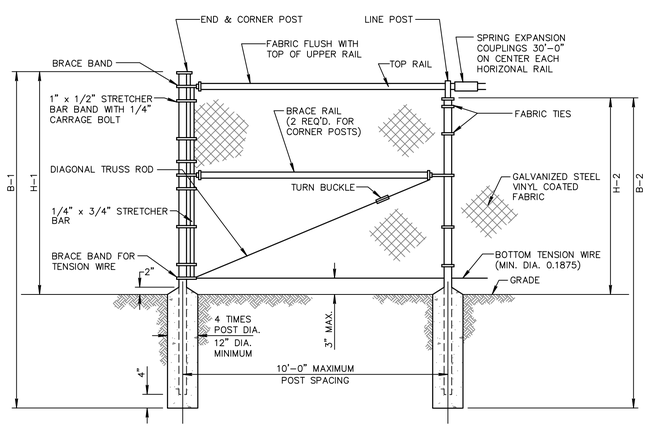

FENCE SECTION ELEVATION

FENCE HEIGHT	END & CORNER POSTS		LINE POSTS	
NOMINAL HEIGHT	B-1 BAR LENGTH	H-1 HEIGHT ABOVE GRADE	B-2 BAR LENGTH	H-2 HEIGHT ABOVE GRADE
5'-0" [1524MM]	8'-0" [2438MM]	5'-0 5/8" [1540MM]	7'-8" [2337MM]	4'-8 7/8" [1445MM]
6'-0" [1829MM]	9'-0" [2743MM]	6'-0 5/8" [1845MM]	8'-8" [2642MM]	5'-8 7/8" [1749MM]
7'-0" [2134MM]	10'-0" [3048MM]	7'-0 5/8" [2150MM]	9'-8" [2946MM]	6'-8 7/8" [2054MM]
8'-0" [2438MM]	11'-0" [3353MM]	8'-0 5/8" [2454MM]	10'-8" [3251MM]	7'-8 7/8" [2359MM]
9'-0" [2743MM]	12'-0" [3658MM]	9'-0 5/8" [2759MM]	11'-8" [3556MM]	8'-8 7/8" [2664MM]
10'-0" [3048MM]	13'-0" [3962MM]	10'-0 5/8" [3064MM]	12'-8" [3861MM]	9'-8 7/8" [2969MM]
11'-0" [3353MM]	14'-0" [4267MM]	11'-0 5/8" [3369MM]	13'-8" [4166MM]	10'-8 7/8" [3273MM]
12'-0" [3658MM]	15'-0" [4572MM]	12'-0 5/8" [3674MM]	14'-8" [4470MM]	11'-8 7/8" [3578MM]

CHAIN LINK FENCE 5 TO 12 FEET HIGH

NOT TO SCALE

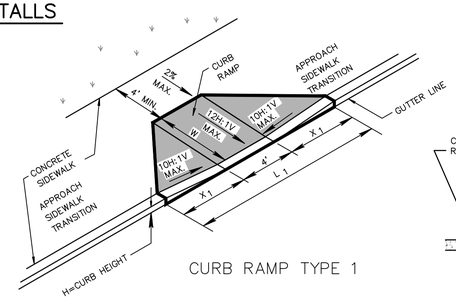

CURB RAMP TYPE 1

CURB RAMP TYPE 1			
H INCHES	X 1 FEET	L 1 FEET	W FEET
4	3.3	10.6	4
6	5.0	14.0	6
8	6.7	17.4	8

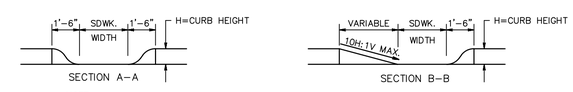

NOTE:

CURB RAMP OPENING TO BE FLUSH WITH ROADWAY PAVEMENT (CURB RAMP TYPES 5 & 6).

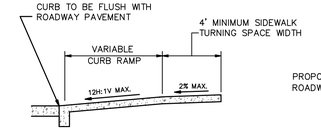

SECTION THROUGH CURB RAMP 1

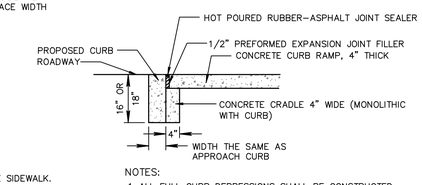

NOTES:

1. ALL FULL CURB DEPRESSIONS SHALL BE CONSTRUCTED OF CONCRETE, REGARDLESS OF THE CURB TYPE THROUGHOUT THE PROJECT.

DROPPED CURB AND CRADLE

NOTES:

1. KEEP TURNING SPACE, APPROACH SIDEWALK TRANSITIONS, AND CURB RAMP CLEAR OF OBSTRUCTIONS THAT PROTRUDE ABOVE THE SIDEWALK.
2. CURB (DROPPED CURB) GUTTERLINE TO BE FLUSH WITH ROADWAY PAVEMENT, A MINIMUM OF 4 FEET AT ALL CURB RAMPS.
3. SIDEWALK AND CURB RAMP WITHIN AREA ENCLOSED BY HEAVY LINES INDICATES THE PAY LIMIT FOR CONCRETE SIDEWALK OF THE APPROPRIATE ADJACENT THICKNESS.
4. CURB AND HEADER WITHIN AREA ENCLOSED BY HEAVY LINES INDICATES THE PAY LIMIT FOR VERTICAL CURB OR SLOPING CURB OF THE APPROPRIATE ADJACENT SIZE AND KIND.
5. WHERE THE DISTANCE FROM THE GUTTER LINE TO THE OUTSIDE EDGE OF SIDEWALK IS 6 FEET OR LESS, USE CURB RAMP TYPE 7, INSTEAD OF CURB RAMP TYPES 1 THROUGH 4.
6. CROSSWALKS MAY BE MARKED OR UNMARKED. SEE PLANS.
7. DIMENSIONS SHOWN IN TABLES ARE FOR 3 INCH TO 9 INCH CURB HEIGHTS. WHERE THE CURB HEIGHTS ARE OTHER THAN WHAT IS PROVIDED IN THE TABLES, THE DIMENSIONS OF THE RAMPS WILL HAVE TO BE CALCULATED BASED ON CROSS SLOPES SHOWN.
8. THE 12H:1V MAXIMUM SLOPE IS THE RUNNING SLOPE FOR CURB RAMPS.
9. DIMENSIONS SHOWN IN TABLES ARE FOR RELATIVELY FLAT SIDEWALK AREAS. CARE SHOULD BE TAKEN WHEN DETERMINING CURB RAMP SIZE BASED ON CURB HEIGHT (H) WHERE ELEVATION OF CURB AND SIDEWALK VARY DRASTICALLY IN AREA OF PROPOSED CURB RAMP.

ADA CURB RAMP

NOT TO SCALE

NY RISING

NEW YORK STATE — Parks, Recreation and Historic Preservation

CONSULTANTS:

Stantec

H2M architects + engineers
538 Broad Hollow Road
4th Floor East
Melville, NY 11747
P:(631)756-8000
F:(631)694-4122

SIDNEY DESIGN GA P.C. (ARCHITECTS)

LKB CONSULTING ENGINEERS

Cashin Associates, P.C. ENGINEERING - PLANNING - ENVIRONMENTAL - CONSTRUCTION MANAGEMENT

MATRIXNEWORLD Engineering Progress
Matrix New World Engineering, Land Surveying and Landscape Architecture, P.C.
120 Wood Avenue South, 6th Floor
Edison, New Jersey 07724
Tel: 732-588-2999
Fax: 973-240-1818
www.matrixnewworld.com
WBE / DBE / SBE
STATE OF NEW YORK CERTIFICATE OF AUTHORIZATION No. 17-4808961

SEAL

"ALTERATION OF THIS DOCUMENT EXCEPT BY A LICENSED PROFESSIONAL IS ILLEGAL"

THESE DOCUMENTS CONTAIN POTENTIALLY SENSITIVE INFORMATION AND SHALL BE USED FOR THEIR INTENDED PURPOSE, ONCE THE INTENDED PURPOSE HAS CEASED, THE DOCUMENTS SHALL BE DESTROYED IN A SECURE MANNER.

IT IS A VIOLATION OF STATE EDUCATION LAW FOR ANY PERSON, UNLESS UNDER THE DIRECTION OF A LICENSED ARCHITECT TO ALTER THIS DOCUMENT IN ANYWAY. ALTERATIONS MUST HAVE THE SEAL AFFIXED ALONG WITH A DESCRIPTION OF THE ALTERATIONS, DATE AND ARCHITECT'S SIGNATURE. COPYRIGHT © 2012

PHASE

90% SUBMISSION

Revisions

Number	Description	Date:
1		
2		
3		
4		
5		

Project Title

HEMPSTEAD LAKE STATE PARK

CONTRACT

NYSP
WORK ORDER: LI-022
CONTRACT: D004472
COA: 1290350/30377/33001/ PRK 4559

PROJECT # NYSP-1702

DATE: MAY 2017

DESIGNED BY:

DRAWN BY:

CHECKED BY: REVIEWED BY:

SHEET TITLE

ENVIRONMENTAL EDUCATION AND RESILIENCY CENTER SITE DETAILS

SHEET

SD-3.0

R5–1
24" X 24"
4 S.F.
[600 X 600 MM]
[0.36 S.M.]

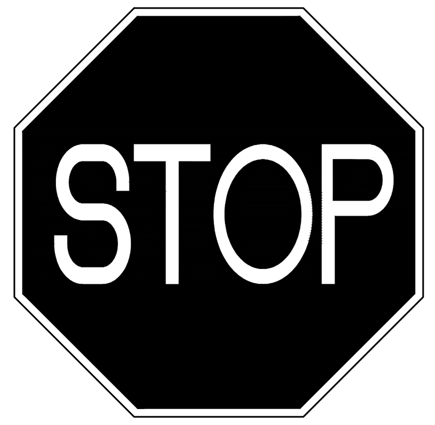

R1–1
30"x 30"
(6.25 S.F.)
[750 x 750 MM]
[0.6 S.M.]

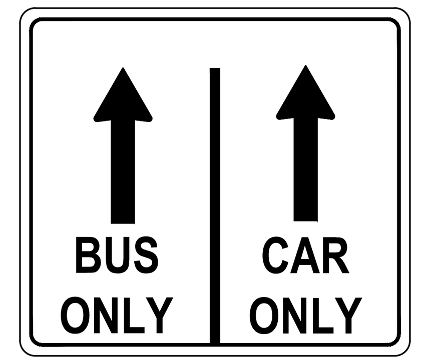

R3–8(MODIFIED)
30" X 36"
7.5 S.F.
[750 X 900 MM]
[0.7 SM]

R6–1R
36" X 12"
(3 S.F.)
[900 X 300 MM]
[0.27 S.M.]

R6–1L
36" X 12"
(3 S.F.)
[900 X 300 MM]
[0.27 S.M.]

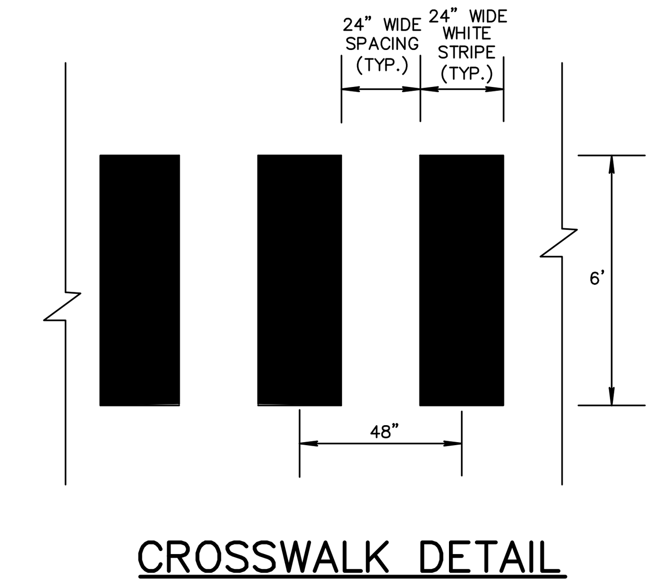

CROSSWALK DETAIL
NOT TO SCALE

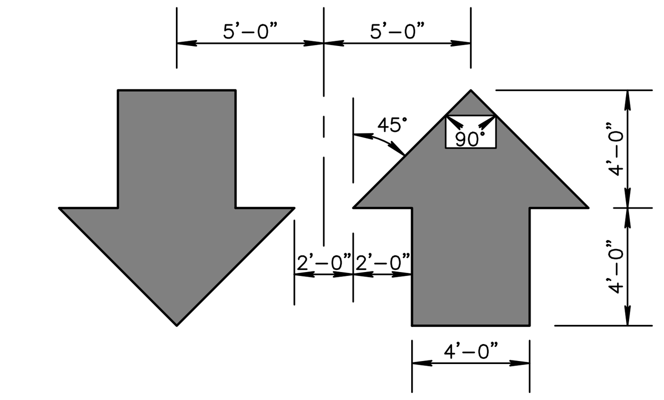

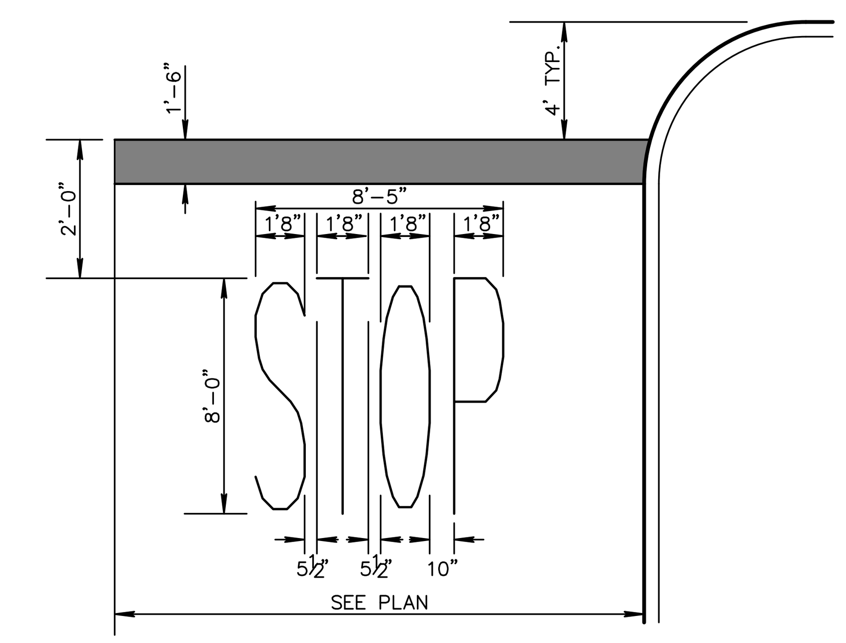

PAVEMENT MARKINGS
NOT TO SCALE

NOTES:
1. ALL SIGNS SHALL BE MINIMUM 18 GUAGE STEEL WITH BAKED ON ENAMEL FINISH. PROVIDE WITH PRE–PUNCHED MOUNTING HOLES.
2. POSTS: 2" STEEL U–CHANNEL BREAKAWAY POST.
3. SIGNS AND POSTS SHALL BE IN ACCORDANCE WITH LOCAL ORDINANCE AND MEET THE REQUIREMENTS OF THE MANUAL ON UNIFORM TRAFFIC CONTROL DEVICES, LATEST EDITION.

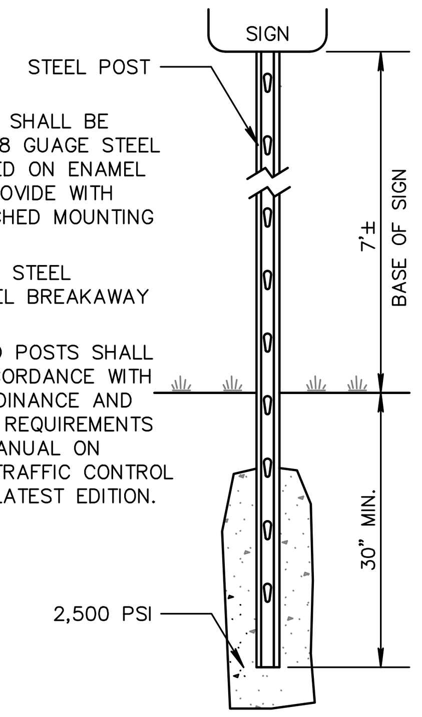

SIGN POST
NOT TO SCALE

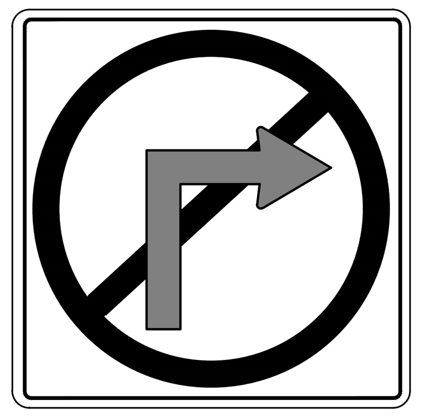

R3–1
24" X 24"
4 S.F.
[600 X 600 MM]
[0.36 S.M.]

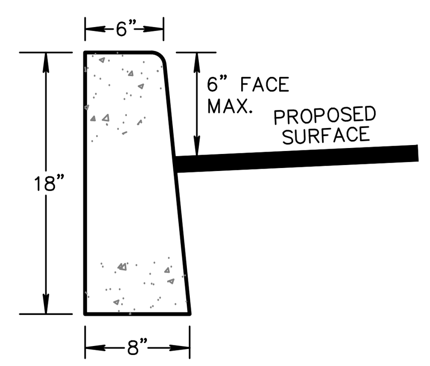

NOTES:
1. CONCRETE FOR CURB CONSTRUCTION TO BE A.E. CLASS B PORTLAND CEMENT CONCRETE HAVING A 28–DAY STRENGTH OF 4,000 P.S.I.
2. 1/2" THICK PREFORMED BITUMINOUS JOINT FILLER SHALL BE USED TO CONSTRUCT EXPANSION JOINTS AT 20' O.C.
3. CONSTRUCTION JOINTS SHALL BE CONSTRUCTED AT 20' O.C. AND OFFSET 10' O.C. FROM EXPANSION JOINTS

CONCRETE CURB
NOT TO SCALE

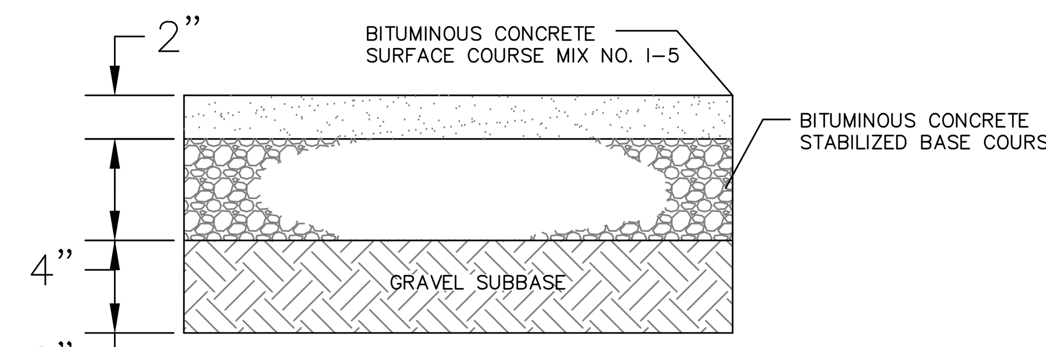

NOTES:
1. SUBBASE SHALL BE FIRM AND APPROVED BY THE ENGINEER OR HIS/HER REPRESENTATIVE PRIOR TO PAVING.
2. ALL CONSTRUCTION METHODS AND MATERIALS SHALL CONFORM TO NY DOT 1989 STANDARDS, SPECIFICATIONS AND INSPECTIONS.
3. THE CONTRACTOR SHALL PREPARE, THE EXISTING SURFACE INCLUDING, BUT NOT LIMITED TO, REMOVAL OF DEBRIS AND VEGETATION, PROVIDING POWER AND HAND BROOMING AND ADJUSTING MANHOLES AND WATER BOXES, ALL TO THE SATISFACTION OF THE ENGINEER.
4. THE CONTRACTOR SHALL PAVE INTERSECTIONS TO THE POINT OF TANGENCY OF THE RADIUS RETURN OR AS DIRECTED BY THE ENGINEER.

ASPHALT PAVEMENT DETAIL
NOT TO SCALE

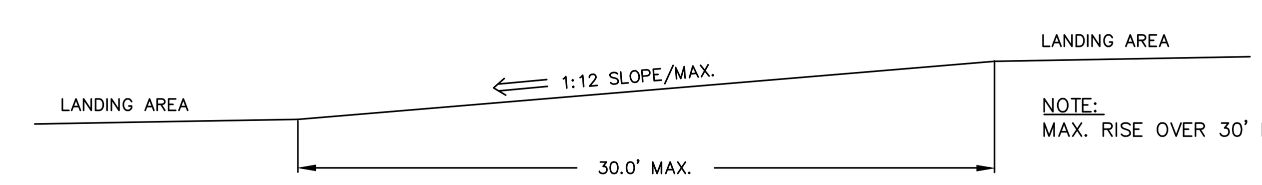

NOTE:
MAX. RISE OVER 30' IS 2.5'.

RAMP PROFILE (TYP.)

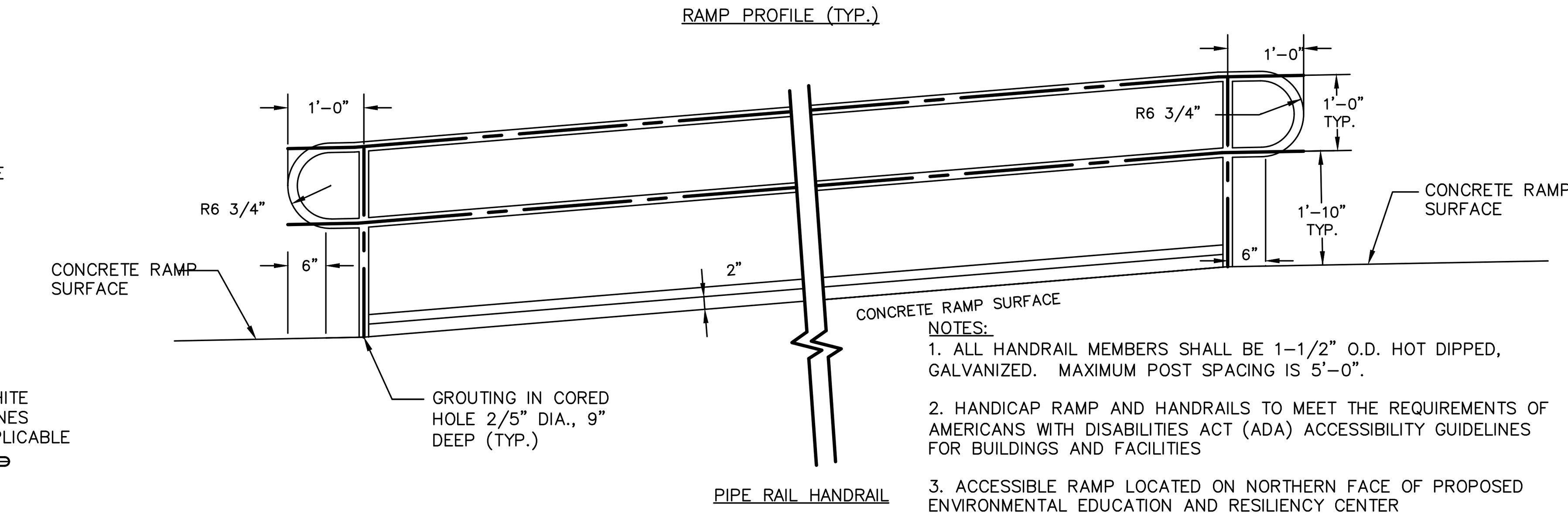

NOTES:
1. ALL HANDRAIL MEMBERS SHALL BE 1–1/2" O.D. HOT DIPPED, GALVANIZED. MAXIMUM POST SPACING IS 5'–0".
2. HANDICAP RAMP AND HANDRAILS TO MEET THE REQUIREMENTS OF AMERICANS WITH DISABILITIES ACT (ADA) ACCESSIBILITY GUIDELINES FOR BUILDINGS AND FACILITIES
3. ACCESSIBLE RAMP LOCATED ON NORTHERN FACE OF PROPOSED ENVIRONMENTAL EDUCATION AND RESILIENCY CENTER

ACCESSIBLE RAMP WITH HANDRAIL
NOT TO SCALE

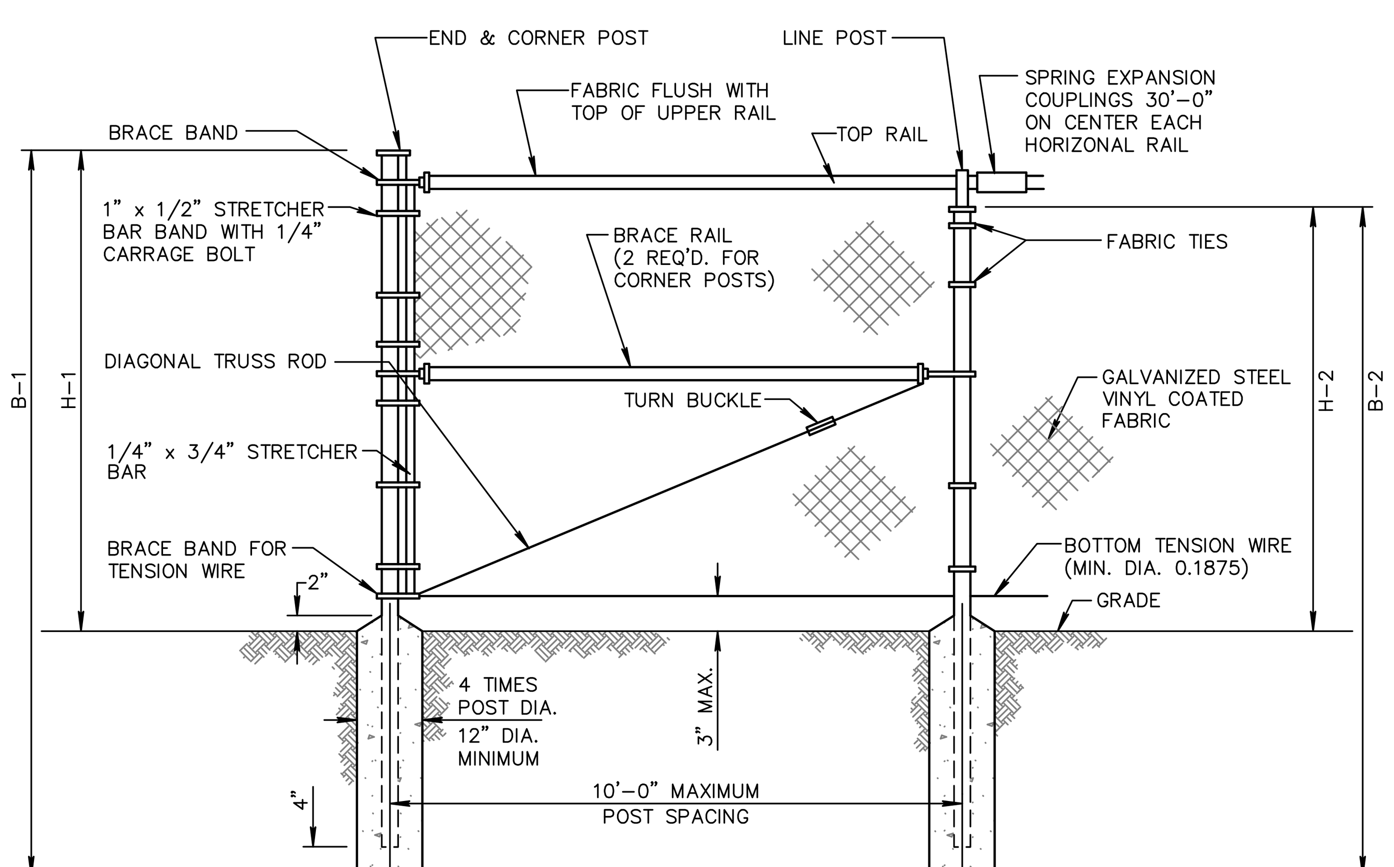

FENCE SECTION ELEVATION

FENCE HEIGHT	END & CORNER POSTS		LINE POSTS	
NOMINAL HEIGHT	B–1 BAR LENGTH	H–1 HEIGHT ABOVE GRADE	B–2 BAR LENGTH	H–2 HEIGHT ABOVE GRADE
5'–0" [1524MM]	8'–0" [2438MM]	5'–0 5/8" [1540MM]	7'–8" [2337MM]	4'–8 7/8" [1445MM]
6'–0" [1829MM]	9'–0" [2743MM]	6'–0 5/8" [1845MM]	8'–8" [2642MM]	5'–8 7/8" [1749MM]
7'–0" [2134MM]	10'–0" [3048MM]	7'–0 5/8" [2150MM]	9'–8" [2946MM]	6'–8 7/8" [2054MM]
8'–0" [2438MM]	11'–0" [3353MM]	8'–0 5/8" [2454MM]	10'–8" [3251MM]	7'–8 7/8" [2359MM]
9'–0" [2743MM]	12'–0" [3658MM]	9'–0 5/8" [2759MM]	11'–8" [3556MM]	8'–8 7/8" [2664MM]
10'–0" [3048MM]	13'–0" [3962MM]	10'–0 5/8" [3064MM]	12'–8" [3861MM]	9'–8 7/8" [2969MM]
11'–0" [3353MM]	14'–0" [4267MM]	11'–0 5/8" [3369MM]	13'–8" [4166MM]	10'–8 7/8" [3273MM]
12'–0" [3658MM]	15'–0" [4572MM]	12'–0 5/8" [3674MM]	14'–8" [4470MM]	11'–8 7/8" [3578MM]

CHAIN LINK FENCE 5 TO 12 FEET HIGH
NOT TO SCALE

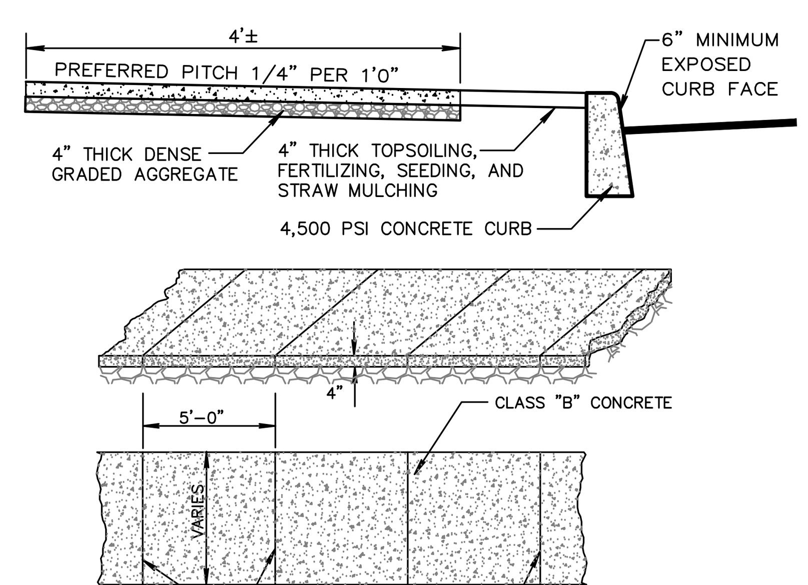

NOTES:
1. PREFORMED BITUMINOUS EXPANSION JOINTS,1/2" THICK SHALL BE INSTALLED EVERY 20 FEET. CONTRACTION JOINTS SHALL BE INSTALLED EVERY 4 FEET.
2. CONCRETE SHALL BE CLASS "B" PORTLAND CEMENT HAVING A 28 DAY STRENGTH OF 4500 PSI.
3. HANDICAP RAMPS SHALL HAVE A LIGHT BROOM FINISH WITH THE STRIATIONS PERPENDICULAR TO TRAFFIC.
4. PROVIDE 4" THICK 3/4" QUARRY PROCESSED STONE OR 3/4" RECYCLED CONCRETE AGGREGATE CONFORMING TO NYDOT SPECIFICATIONS.
5. CONTRACTOR TO COORDINATE JOINTING WITH ARCHITECT.

CONCRETE SIDEWALK
NOT TO SCALE

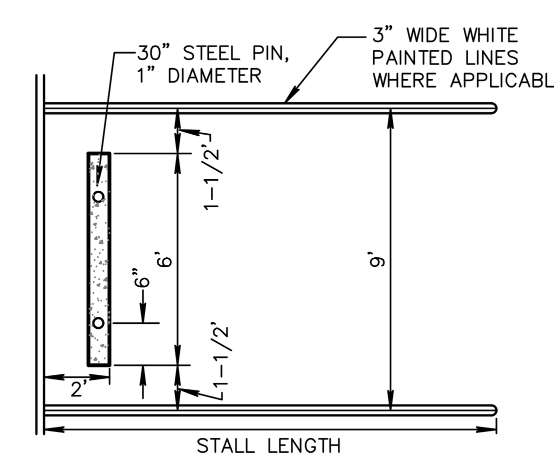

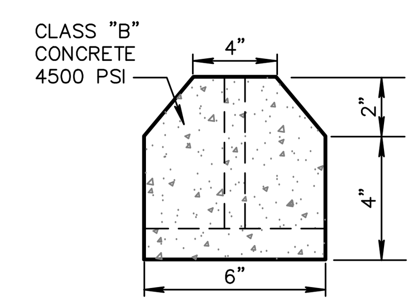

CONCRETE WHEEL STOP
NOT TO SCALE

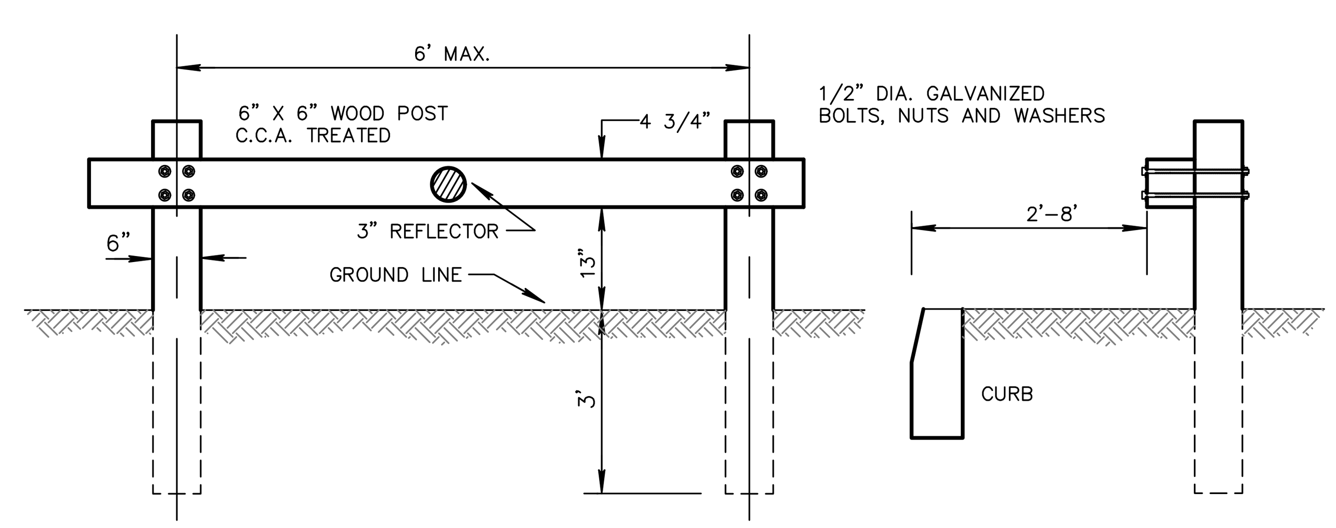

TIMBER GUIDE RAIL
NOT TO SCALE

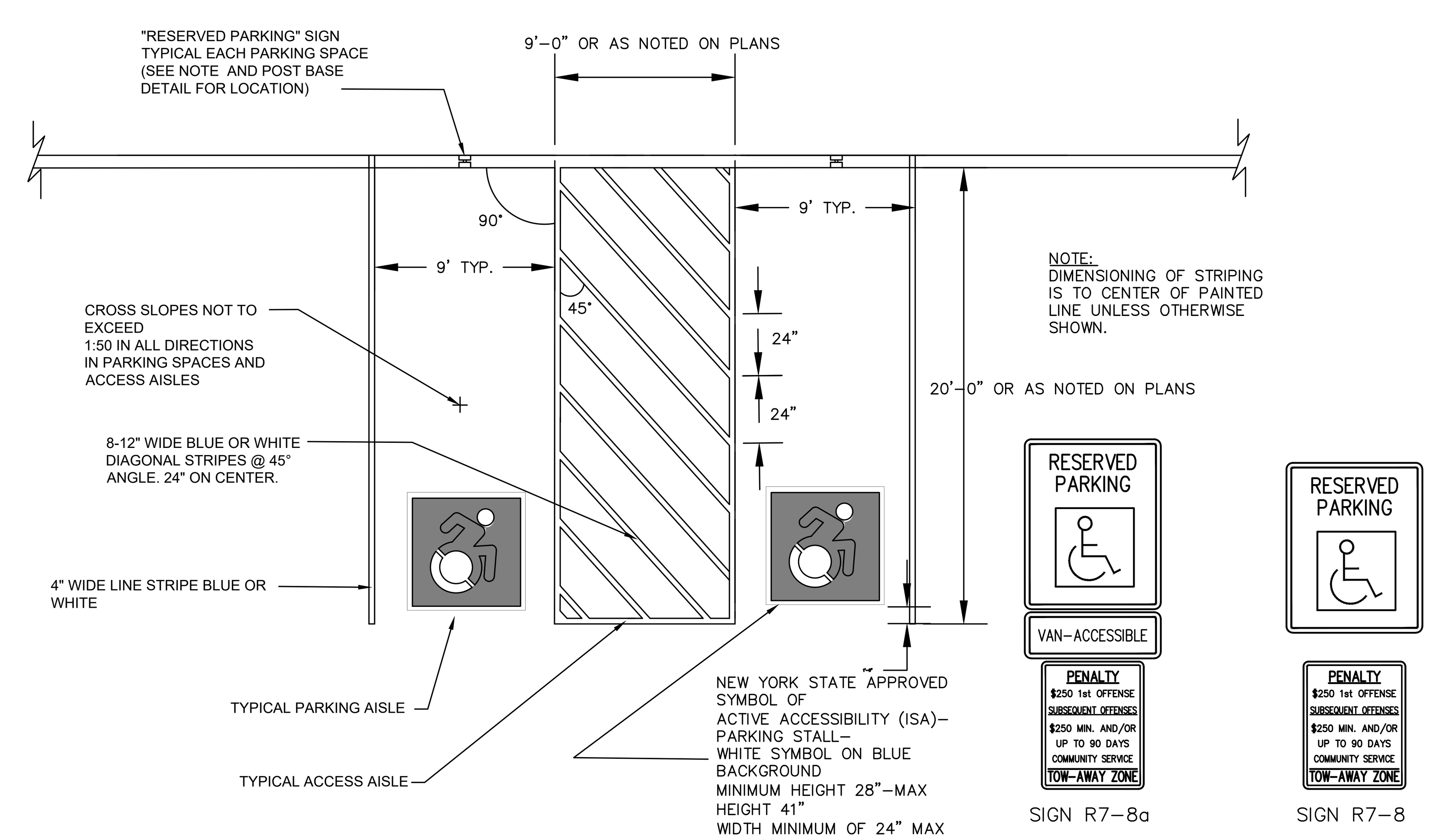

HANDICAP PARKING STALLS
NOT TO SCALE

NEW YORK STATE — Parks, Recreation and Historic Preservation

CONSULTANTS:

Stantec

H2M architects + engineers
538 Broad Hollow Road
4th Floor East
Melville, NY 11747
P:(631)756-8000
F:(631)694-4122

GIBNEY DESIGN LA PC LANDSCAPE ARCHITECTURE PC

LKB CONSULTING ENGINEERS

Cashin Associates, P.C.
ENGINEERING · PLANNING · CONSTRUCTION MANAGEMENT

MATRIXNEWORLD
Engineering Progress
Matrix New World Engineering, Land Surveying and Landscape Architecture, P.C.
442 State Route 35, Second Floor
Eatontown, New Jersey 07724
WBE / DBE / SBE
Tel: 732-588-2999
Fax: 973-240-1818
www.matrixneworld.com
STATE OF NEW YORK CERTIFICATE OF AUTHORIZATION No. 17-082661

SEAL

"ALTERATION OF THIS DOCUMENT EXCEPT BY A LICENSED PROFESSIONAL IS ILLEGAL"

THESE DOCUMENTS CONTAIN POTENTIALLY SENSITIVE INFORMATION AND SHALL BE USED FOR THEIR INTENDED PURPOSE. ONCE THE INTENDED PURPOSE HAS CEASED, THE DOCUMENTS SHALL BE DESTROYED IN A SECURE MANNER.

IT IS A VIOLATION OF STATE EDUCATION LAW FOR ANY PERSON, UNLESS UNDER THE DIRECTION OF A LICENSED ARCHITECT TO ALTER THIS DOCUMENT IN ANYWAY. ALTERATIONS MUST HAVE THE SEAL AFFIXED ALONG WITH A DESCRIPTION OF THE ALTERATIONS, DATE AND ARCHITECT'S SIGNATURE. COPYRIGHT © 2012

PHASE
90% SUBMISSION

Revisions

Number	Description	Date:
1		
2		
3		
4		
5		

Project Title

HEMPSTEAD LAKE STATE PARK

CONTRACT
NYSP
WORK ORDER: LI-022
CONTRACT: D004472
COA: 1290350/30377/33001/ PRK 4559

PROJECT #: NYSP-1702
DATE: MAY 2017
DESIGNED BY:
DRAWN BY:
CHECKED BY:
REVIEWED BY:

SHEET TITLE
SITE DETAILS

SHEET **SD-4.0**

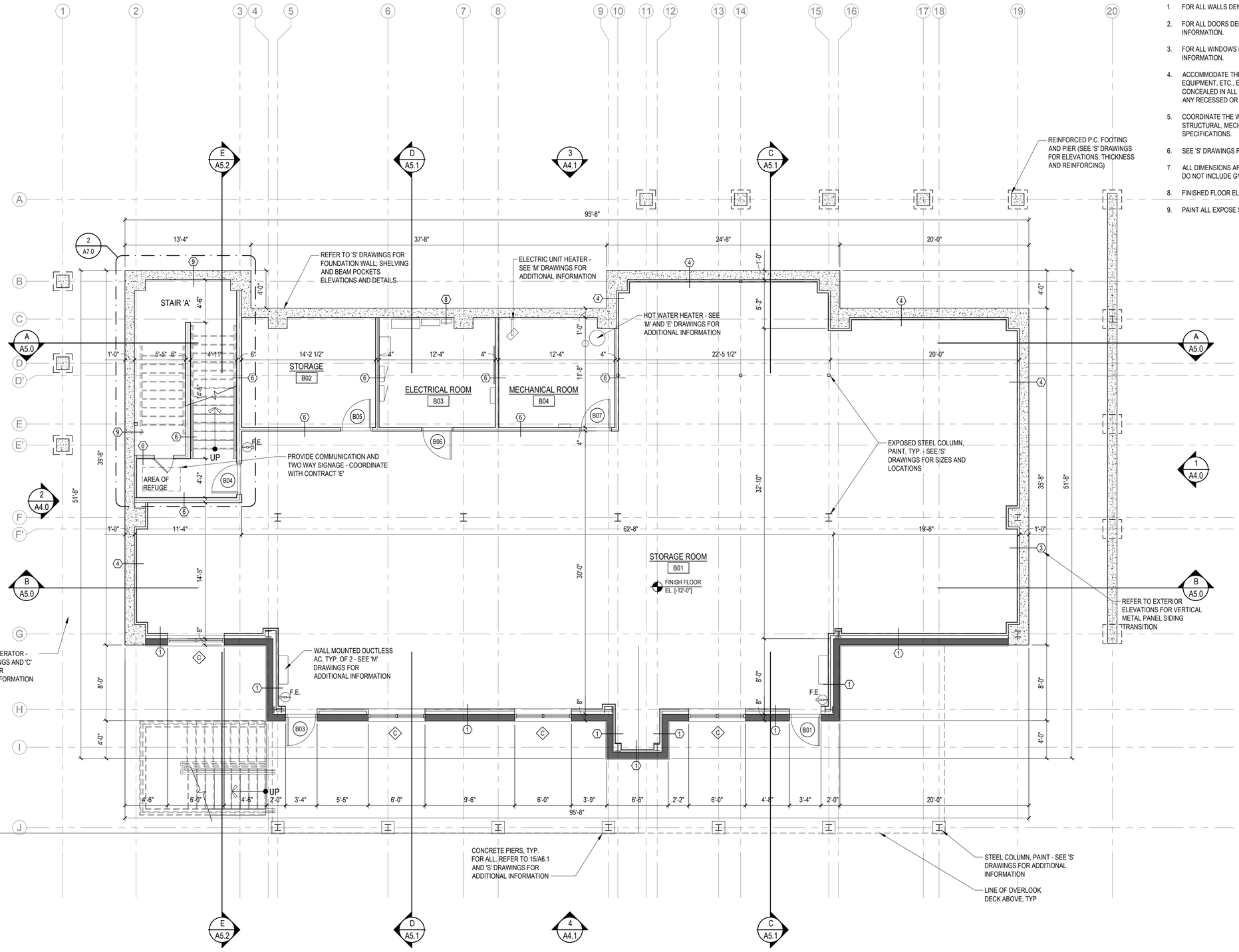

Basement Floor Plan

SCALE: 3/16"=1'-0"

GENERAL NOTES:

1. FOR ALL WALLS DENOTED AS SEE DRAWING G1.0 FOR PARTITION TYPES.
2. FOR ALL DOORS DENOTED AS SEE DRAWING A10.0 FOR ADDITIONAL INFORMATION.
3. FOR ALL WINDOWS DENOTED AS SEE DRAWING A11.0 & A11.1 FOR ADDITIONAL INFORMATION.
4. ACCOMMODATE THE CONSTRUCTION TO ACCEPT ALL PIPING, CONDUITS, EQUIPMENT, ETC., EITHER SPECIFIED OR DETAILED TO BE RECESSED OR CONCEALED IN ALL WALL TYPES AS REQUIRED. COORDINATE THE LOCATION OF ANY RECESSED OR CONCEALED ITEMS WITH ALL TRADES.
5. COORDINATE THE WORK REQUIRED ON THIS DRAWING WITH ALL CIVIL, STRUCTURAL, MECHANICAL, PLUMBING AND ELECTRICAL DRAWINGS AND SPECIFICATIONS.
6. SEE 'S' DRAWINGS FOR CONTROL AND EXPANSION JOINT LOCATIONS.
7. ALL DIMENSIONS ARE FROM NOMINAL STUD TO STUD OR STUD TO MASONRY AND DO NOT INCLUDE GYP. BD. OR FINISHES, TYP.
8. FINISHED FLOOR ELEVATION IS 0'-0" UNLESS NOTED OTHERWISE.
9. PAINT ALL EXPOSE STEEL & STRUCTURE, TYP.

LEGEND

F.E. SURFACE MOUNTED FIRE EXTINGUISHER (COORDINATE FINAL LOCATION IN FIELD)

F.E. SEMI-RECESSED FIRE EXTINGUISHER (COORDINATE FINAL LOCATION IN FIELD)

PROGRAM CONSULTANT:

Living with the BAY

CLIENTS:

NEW YORK STATE OF OPPORTUNITY Parks, Recreation and Historic Preservation

Governor's Office of Storm Recovery

PROJECT MANAGER:

Stantec

LEAD LANDSCAPE ARCHITECTS + ARCHITECTS:

H2M architects + engineers
538 Broad Hollow Road
4th Floor East
Melville, NY 11747
P:(631)756-8000
F:(631)694-4122

CERTIFIED ARBORISTS + LANDSCAPE ARCHITECTS:

CHENEY DESIGN LA & PC LANDSCAPE ARCHITECTURE PC

STRUCTURAL ENGINEERS:

LKB CONSULTING ENGINEERS

CIVIL ENGINEERS + LANDSCAPE ARCHITECTS:

Cashin Associates, P.C. ENGINEERING - PLANNING - CONSTRUCTION MANAGEMENT

LANDSCAPE ARCHITECTS:

MATRIXNEWORLD Engineering Program

Matrix New World Engineering, Land Surveying
Landscape Architecture, D.P.C.
442 State Route 35, Second Floor
Eatontown, New Jersey 07724
WBE / DBE / SBE
NEW JERSEY CERTIFICATE OF AUTHORIZATION No. 24GA27982000

Tel: 732-389-2999
Fax: 973-240-1818
www.matrixnewworld.com

SEAL

"ALTERATION OF THIS DOCUMENT EXCEPT BY A LICENSED PROFESSIONAL IS ILLEGAL"

THESE DOCUMENTS CONTAIN POTENTIALLY SENSITIVE INFORMATION AND SHALL BE USED FOR THEIR INTENDED PURPOSE. ONCE THE INTENDED PURPOSE HAS CEASED, THE DOCUMENTS SHALL BE DESTROYED IN A SECURE MANNER.

IT IS A VIOLATION OF STATE EDUCATION LAW FOR ANY PERSON, UNLESS UNDER THE DIRECTION OF A LICENSED ARCHITECT TO ALTER THIS DOCUMENT IN ANYWAY. ALTERATIONS MUST HAVE THE SEAL AFFIXED ALONG WITH A DESCRIPTION OF THE ALTERATIONS, DATE AND ARCHITECT'S SIGNATURE. COPYRIGHT © 2012

PHASE:

90% SUBMISSION

Revisions

Number	Description	Date:
1		
2		
3		
4		
5		

Project Title

HEMPSTEAD LAKE STATE PARK

CONTRACT

NYSP
WORK ORDER: LI-022
CONTRACT: D004472
COA: 1290350/30377/33001/ PRK 4559

PROJECT #: NYSP-1503

DATE: JULY 2017

DESIGNED BY: ACP

DRAWN BY: ALT / TJS

CHECKED BY:

REVIEWED BY:

SHEET TITLE

BASEMENT FLOOR PLAN

SHEET #

A1.0

C:\Users\aconcepcion\appdata\local\temp\AcPublish_3268\A1.0 - Basement Floor Plan.dwg Last Modified: Jul 24, 2017 - 6:09pm Plotted on: Jul 25, 2017 - 11:27am By aconcepcion

GENERAL NOTES:

1. SEE DRAWING A1.0 FOR GENERAL FLOOR PLAN NOTES, AND LEGEND.

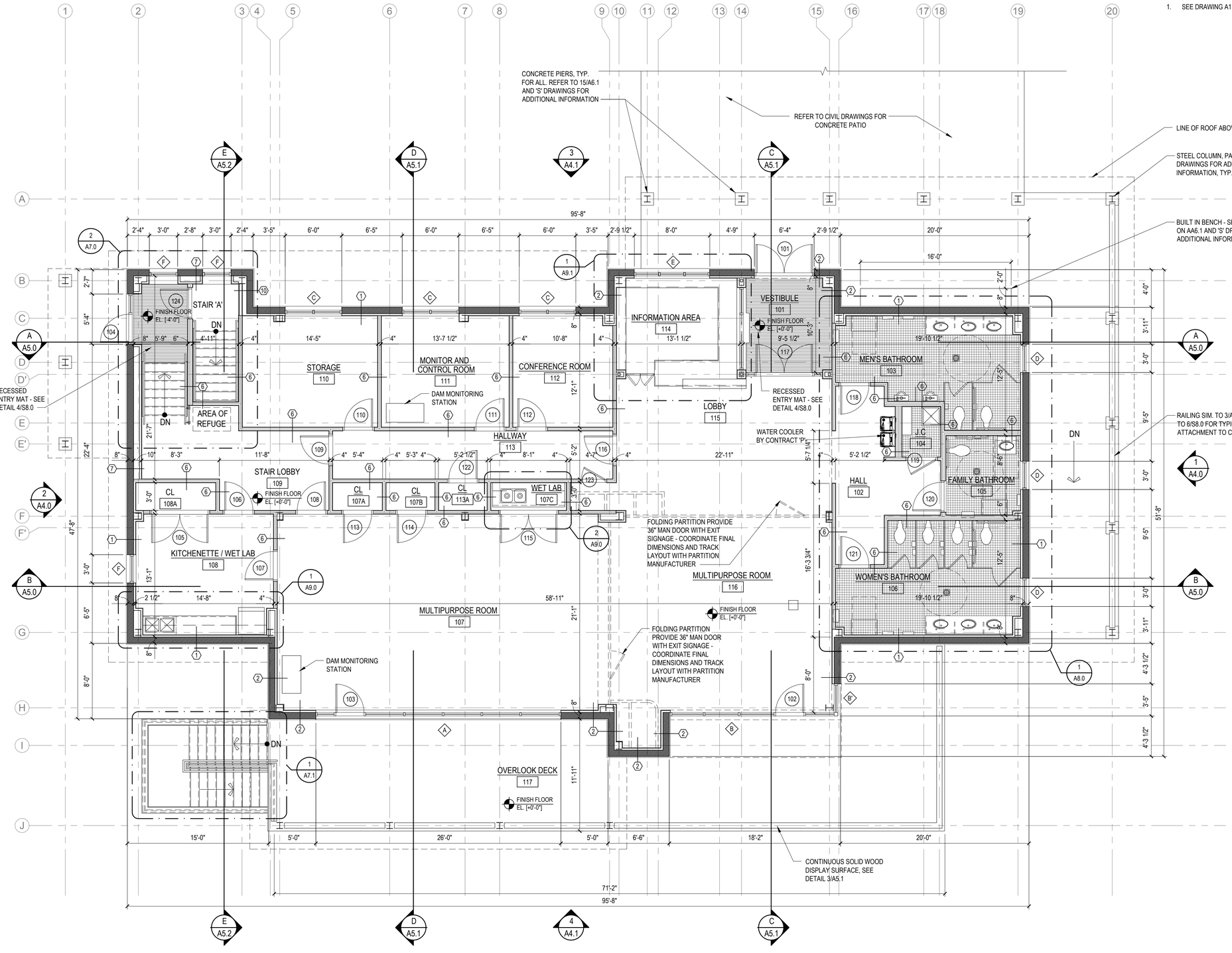

First Floor Plan

SCALE: 3/16"=1'-0"

PROGRAM CONSULTANT:

Living with the BAY

CLIENTS:

NEW YORK STATE OF OPPORTUNITY — Parks, Recreation and Historic Preservation

Governor's Office of Storm Recovery

PROJECT MANAGER:

Stantec

LEAD LANDSCAPE ARCHITECTS + ARCHITECTS:

H2M architects + engineers
538 Broad Hollow Road
4th Floor East
Melville, NY 11747
P:(631)756-8000
F:(631)694-4122

CERTIFIED ARBORISTS + LANDSCAPE ARCHITECTS:

CHENEY DESIGN L.A. & P.C. LANDSCAPE ARCHITECTURE PC

STRUCTURAL ENGINEERS:

LKB CONSULTING ENGINEERS

CIVIL ENGINEERS + LANDSCAPE ARCHITECTS:

Cashin Associates, P.C.
ENGINEERING - PLANNING - CONSTRUCTION MANAGEMENT

LANDSCAPE ARCHITECTS:

MATRIXNEWORLD
Engineering Program
Matrix New World Engineering, Land Surveying
Landscape Architecture, D.P.C.
442 State Route 35, Second Floor
Eatontown, New Jersey 07724
Tel: 732-389-2999
Fax: 973-240-1818
WBE / DBE / SBE
www.matrixnewworld.com
NEW JERSEY CERTIFICATE OF AUTHORIZATION No. 24GA27982000

SEAL

"ALTERATION OF THIS DOCUMENT EXCEPT BY A LICENSED PROFESSIONAL IS ILLEGAL"

THESE DOCUMENTS CONTAIN POTENTIALLY SENSITIVE INFORMATION AND SHALL BE USED FOR THEIR INTENDED PURPOSE. ONCE THE INTENDED PURPOSE HAS CEASED, THE DOCUMENTS SHALL BE DESTROYED IN A SECURE MANNER.

IT IS A VIOLATION OF STATE EDUCATION LAW FOR ANY PERSON, UNLESS UNDER THE DIRECTION OF A LICENSED ARCHITECT TO ALTER THIS DOCUMENT IN ANYWAY. ALTERATIONS MUST HAVE THE SEAL AFFIXED ALONG WITH A DESCRIPTION OF THE ALTERATIONS, DATE AND ARCHITECT'S SIGNATURE. COPYRIGHT © 2012

PHASE
90% SUBMISSION

Revisions

Number	Description	Date:
1		
2		
3		
4		
5		

Project Title

HEMPSTEAD LAKE STATE PARK

CONTRACT
NYSP
WORK ORDER: LI-022
CONTRACT: D004472
COA: 1290350/30377/33001/ PRK 4559

PROJECT #: NYSP-1503
DATE: JULY 2017
DESIGNED BY: ACP
DRAWN BY: ALT / TJS
CHECKED BY:
REVIEWED BY:

SHEET TITLE
FIRST FLOOR PLAN

SHEET #
A1.1

C:\Users\aconcepcion\appdata\local\temp\AcPublish_6268\A1.1 - 1st Floor Plan.dwg Last Modified: Jul 24, 2017 - 6:00pm Plotted on: Jul 25, 2017 - 11:58am By aconcepcion

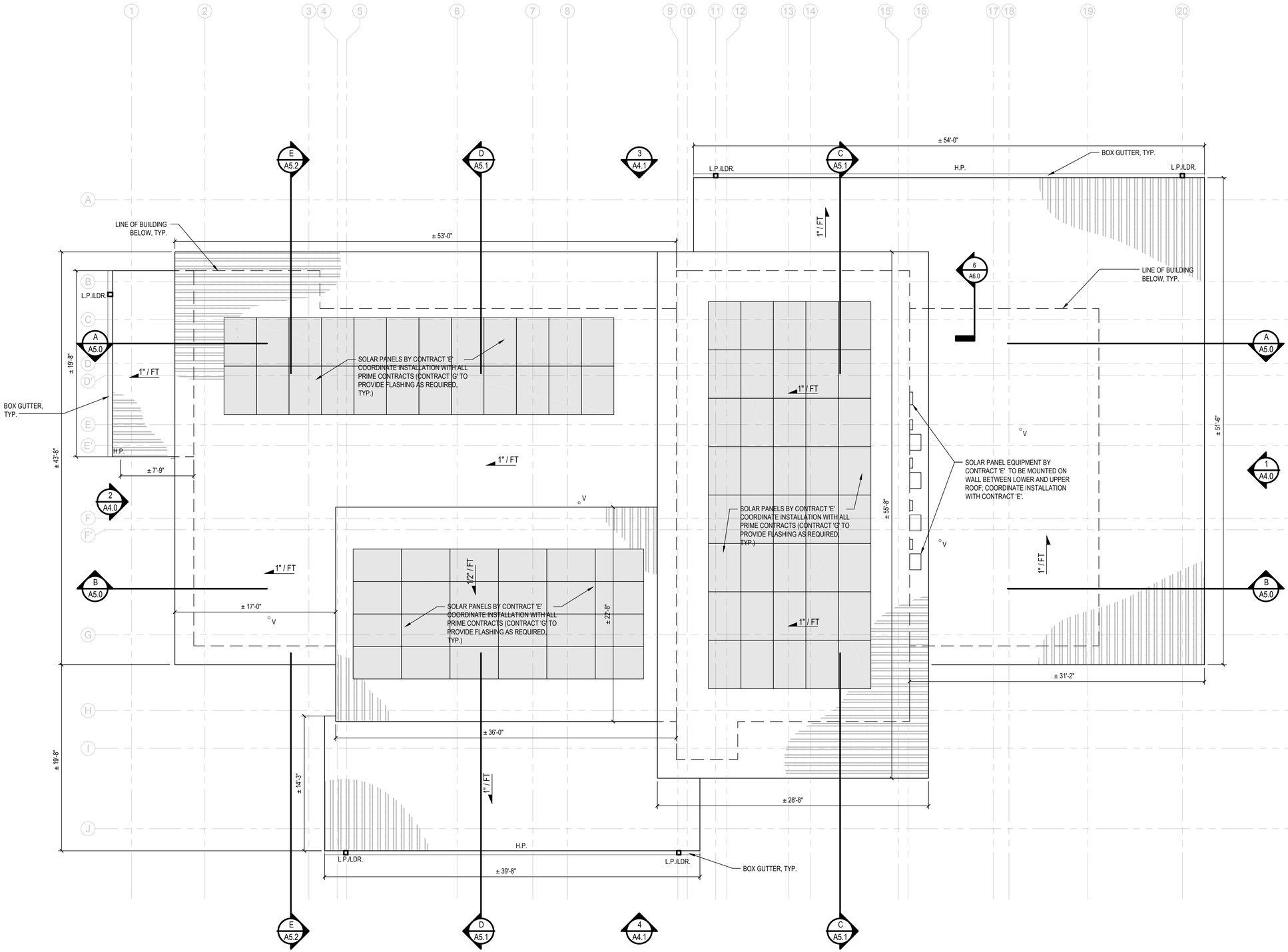

Roof Plan

SCALE: 3/16"=1'-0"

GENERAL ROOF NOTES:

1. THIS DRAWING SERVES AS A LIST OF PRINCIPAL ROOFING ITEMS AND IS NOT A COMPLETE LIST OF EVERY ROOFING ITEM AND ACCESSORY. THIS DRAWING MUST BE COORDINATED WITH ALL OTHER DRAWINGS, ROOF DETAILS AND WITH ALL ITEMS SPECIFIED.
2. THE INTENDED SCOPE OF WORK INCLUDES THE COMPLETE INSTALLATION OF AN STANDING SEAM METAL ROOF SYSTEM. THE CONTRACTOR SHALL BE RESPONSIBLE FOR PROVIDING ALL MATERIALS, LABOR, ROOFING ITEMS AND ACCESSORIES (REQUIRED FOR A COMPLETE, AND FIRST-RATE INSTALLATION) WHETHER OR NOT SPECIFICALLY INDICATED WITHIN THE THE CONTRACT DOCUMENTS.
3. COORDINATE THE WORK REQUIRED ON THIS DRAWING WITH ALL STRUCTURAL, ARCHITECTURAL, MECHANICAL, PLUMBING AND ELECTRICAL DRAWINGS, AND SPECIFICATIONS.
4. COORDINATE EXACT LOCATIONS OF PENETRATIONS TO BE MADE IN ALL ROOFS AND ROOF ASSEMBLIES.
5. THE GENERAL CONTRACTOR SHALL REVIEW, COORDINATE, AND INSTALL SLEEVES AND PENETRATIONS REQUIRED TO ACCOMMODATE ALL WORK DETAILED OR SPECIFIED.
6. THE GENERAL CONTRACTOR IS RESPONSIBLE FOR PROVIDING FLASHING FOR ALL ROOF PENETRATIONS U.N.O.
7. THE GENERAL CONTRACTOR IS RESPONSIBLE FOR MAKING ALL ROOF PENETRATIONS FOR ALL WORK.
8. THE GENERAL CONTRACTOR SHALL PROVIDE ALL TEMPORARY ROOF FLASHING WORK WHICH IS REQUIRED. IT IS THE RESPONSIBILITY OF THE GENERAL CONTRACTOR TO MAINTAIN A WEATHER TIGHT ROOF AT ALL TIMES.
9. PROVIDE MIN. ROOF PITCH AS INDICATED ON PLAN.
10. PROVIDE CRICKETS BEHIND ALL ROOFING ITEMS TO PROVIDE REQUIRED PITCH.
11. THE GENERAL CONTRACTOR SHALL PROVIDE ADEQUATE TEMPORARY DRAINAGE FOR ALL PORTIONS OF THE ROOF, THROUGHOUT THE ENTIRE DURATION OF THE PROJECT.
12. H-P-E CONTRACTORS SHALL FURNISH SLEEVES AND LOCATE ALL MECHANICAL PENETRATIONS REQUIRED TO ACCOMMODATE ALL WORK DETAILED OR SPECIFIED FOR THEIR CONTRACT.
13. CONTRACTOR SHALL PROVIDE SNOW GUARDS AS PER SPECIFICATION SECTION 074113. INSTALLATION SHALL BE AS PER "SMACNA" SPACING REQUIREMENTS AND IN ACCORDANCE WITH LOCAL SNOW LOADING REQUIREMENTS. SNOW GUARD FINISH TO MATCH FINISH OF ROOF PANELS.
14. PROVIDE ICE AND WATER SHIELD UNDERNEATH ENTIRE STANDING SEAM METAL ROOFING SYSTEM
15. ALL WORK SHOWN IS BY CONTRACT 'G' UNLESS NOTED OTHERWISE.
16. MAINTAIN MINIMUM 10' CLEARANCE FROM ANY ROOF EDGE FOR ALL EQUIPMENT.

LEGEND

°V	PLUMBING VENT, SEE 17/A6.1 AND 'P' DRAWINGS
	INDICATES STANDING SEAM METAL ROOFING SYSTEM
LDR	LEADER LOCATIONS, TO C.I. BOOTS, BELOW (TYP.)
L.P.	INDICATES RELATIVE LOW POINTS OF GUTTER
H.P.	INDICATES RELATIVE HIGH POINTS OF GUTTER
→	INDICATES LOCAL PITCH OF GUTTERS
→	INDICATES SLOPE DIRECTION OF ROOF

PROGRAM CONSULTANT:

Living with the BAY

CLIENTS:

NEW YORK STATE OF OPPORTUNITY. Parks, Recreation and Historic Preservation

Governor's Office of Storm Recovery

PROJECT MANAGER:

Stantec

LEAD LANDSCAPE ARCHITECTS + ARCHITECTS:

H2M architects + engineers
538 Broad Hollow Road
4th Floor East
Melville, NY 11747
P:(631)756-8000
F:(631)694-4122

CERTIFIED ARBORISTS + LANDSCAPE ARCHITECTS:

CHENEY DESIGN LA & PC LANDSCAPE ARCHITECTURE PC

STRUCTURAL ENGINEERS:

LKB CONSULTING ENGINEERS

CIVIL ENGINEERS + LANDSCAPE ARCHITECTS:

Cashin Associates, P.C. ENGINEERING - PLANNING - CONSTRUCTION MANAGEMENT

LANDSCAPE ARCHITECTS:

MATRIXNEWORLD Engineering Program

Matrix New World Engineering, Land Surveying
Landscape Architecture, D.P.C.
442 State Route 35, Second Floor
Eatontown, New Jersey 07724
MNE / GM / SBE
Tel: 732-389-2999
Fax: 973-240-1818
www.matrixnewworld.com
NEW JERSEY CERTIFICATE OF AUTHORIZATION No. 24GA27962500

SEAL

"ALTERATION OF THIS DOCUMENT EXCEPT BY A LICENSED PROFESSIONAL IS ILLEGAL"

THESE DOCUMENTS CONTAIN POTENTIALLY SENSITIVE INFORMATION AND SHALL BE USED FOR THEIR INTENDED PURPOSE. ONCE THE INTENDED PURPOSE HAS CEASED, THE DOCUMENTS SHALL BE DESTROYED IN A SECURE MANNER.

IT IS A VIOLATION OF STATE EDUCATION LAW FOR ANY PERSON, UNLESS UNDER THE DIRECTION OF A LICENSED ARCHITECT TO ALTER THIS DOCUMENT IN ANYWAY. ALTERATIONS MUST HAVE THE SEAL AFFIXED ALONG WITH A DESCRIPTION OF THE ALTERATIONS, DATE AND ARCHITECT'S SIGNATURE. COPYRIGHT © 2012

PHASE

90% SUBMISSION

Revisions

Number	Description	Date:
1		
2		
3		
4		
5		

Project Title

HEMPSTEAD LAKE STATE PARK

CONTRACT

NYSP
WORK ORDER: LI-022
CONTRACT: D004472
COA: 1290350/30377/33001/ PRK 4559

PROJECT #: NYSP-1503

DATE: JULY 2017

DESIGNED BY:

DRAWN BY: TJS

CHECKED BY: REVIEWED BY:

SHEET TITLE

ROOF PLAN AND NOTES

SHEET # **A2.0**

C:\Users\aconcepcion\appdata\local\temp\AcPublish_14424\A2.0 - Roof Plan.dwg Last Modified: Jul 17, 2017 - 7:32pm Plotted on: Jul 19, 2017 - 7:01pm By aconcepcion

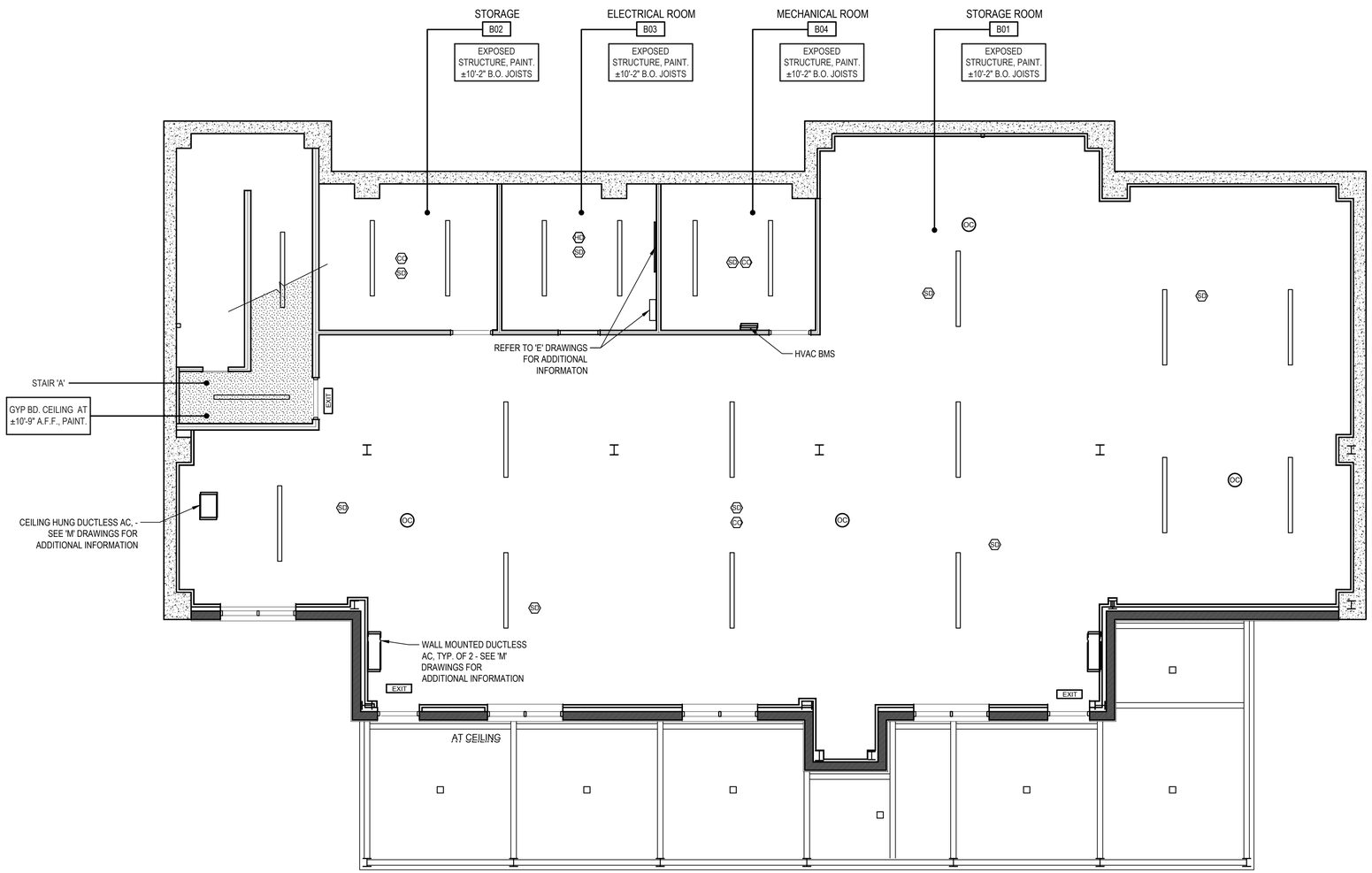

Basement Reflected Ceiling Plan

SCALE: 3/16"=1'-0"

LEGEND

	2'x2' ACOUSTICAL CEILING TILE
	GYPSUM BOARD CEILING
	STEEL STUD AND GYPSUM BOARD PARTITION
	VENTED SOFFIT
	SUPPLY AIR DIFFUSER
	RETURN AIR DIFFUSER
EXIT	EMERGENCY EXIT SIGN
OC	OCCUPANCY SENSOR, CEILING MOUNT
	PENDANT/RECESSED LINEAR LIGHT FIXTURES
	WALL MOUNTED LINEAR LIGHT FIXTURES
	RECESSED LIGHT FIXTURE
	HIGH-HAT LIGHT FIXTURE
	ELECTRIC HEATING CEILING PANELS

REFLECTED CEILING PLAN NOTES:

1. PAINT ALL EXPOSED STEEL FRAMING, SPRAY ON FIRE PROOFING, DUCT WORK, PIPING AND CONDUIT.
2. REFER TO 'H' DRAWINGS FOR ADDITIONAL HVAC INFORMATION.
3. REFER TO 'E' DRAWINGS FOR ADDITIONAL LIGHTING, SENSOR, AND FIRE ALARM INFORMATION.
4. REFER TO FINISH SCHEDULE FOR ADDITIONAL INFORMATION.
5. PROVIDE ACCEPTED CEILING. COORDINATION DRAWINGS PRIOR TO LAYOUT OF ANY CEILING ITEMS.
6. ALL CEILING MOUNTED DEVICES IN ACT CEILING SHALL BE CENTERED IN CEILING TILES.

PROGRAM CONSULTANT:

Living with the BAY

CLIENTS:

NEW YORK STATE OF OPPORTUNITY. Parks, Recreation and Historic Preservation

Governor's Office of Storm Recovery

PROJECT MANAGER:

Stantec

LEAD LANDSCAPE ARCHITECTS + ARCHITECTS:

H2M architects + engineers
538 Broad Hollow Road
4th Floor East
Melville, NY 11747
P:(631)756-8000
F:(631)694-4122

CERTIFIED ARBORISTS + LANDSCAPE ARCHITECTS:

CHENEY DESIGN L.A. & P.C. LANDSCAPE ARCHITECTURE PC

STRUCTURAL ENGINEERS:

LKB CONSULTING ENGINEERS

CIVIL ENGINEERS + LANDSCAPE ARCHITECTS:

Cashin Associates, P.C.
ENGINEERING - PLANNING - CONSTRUCTION MANAGEMENT

LANDSCAPE ARCHITECTS:

MATRIXNEWORLD
Engineering Program
Matrix New World Engineering, Land Surveying
Landscape Architecture, D.P.C.
442 State Route 35, Second Floor
Eatontown, New Jersey 07724
WBE / DBE / SBE
NEW JERSEY CERTIFICATE OF AUTHORIZATION No. 24GA27982000
Tel: 732-389-2999
Fax: 973-240-1818
www.matrixnewworld.com

SEAL

"ALTERATION OF THIS DOCUMENT EXCEPT BY A LICENSED PROFESSIONAL IS ILLEGAL"

THESE DOCUMENTS CONTAIN POTENTIALLY SENSITIVE INFORMATION AND SHALL BE USED FOR THEIR INTENDED PURPOSE. ONCE THE INTENDED PURPOSE HAS CEASED, THE DOCUMENTS SHALL BE DESTROYED IN A SECURE MANNER.

IT IS A VIOLATION OF STATE EDUCATION LAW FOR ANY PERSON, UNLESS UNDER THE DIRECTION OF A LICENSED ARCHITECT TO ALTER THIS DOCUMENT IN ANYWAY. ALTERATIONS MUST HAVE THE SEAL AFFIXED ALONG WITH A DESCRIPTION OF THE ALTERATIONS, DATE AND ARCHITECT'S SIGNATURE. COPYRIGHT © 2012

PHASE
90% SUBMISSION

Revisions

Number	Description	Date:
1		
2		
3		
4		
5		

Project Title

HEMPSTEAD LAKE STATE PARK

CONTRACT
NYSP
WORK ORDER: LI-022
CONTRACT: D004472
COA: 1290350/30377/33001/ PRK 4559

PROJECT #: NYSP-1503
DATE: JULY 2017
DESIGNED BY:
DRAWN BY:
CHECKED BY:
REVIEWED BY:

SHEET TITLE
BASEMENT REFLECTED CEILING PLAN

SHEET #
A3.0

C:\Users\sconcepcion\appdata\local\temp\AcPublish_1442\A3.0 - Basement RCP.dwg Last Modified: Jul 19, 2017 - 6:31pm Plotted on: Jul 19, 2017 - 6:31pm By sconcepcion

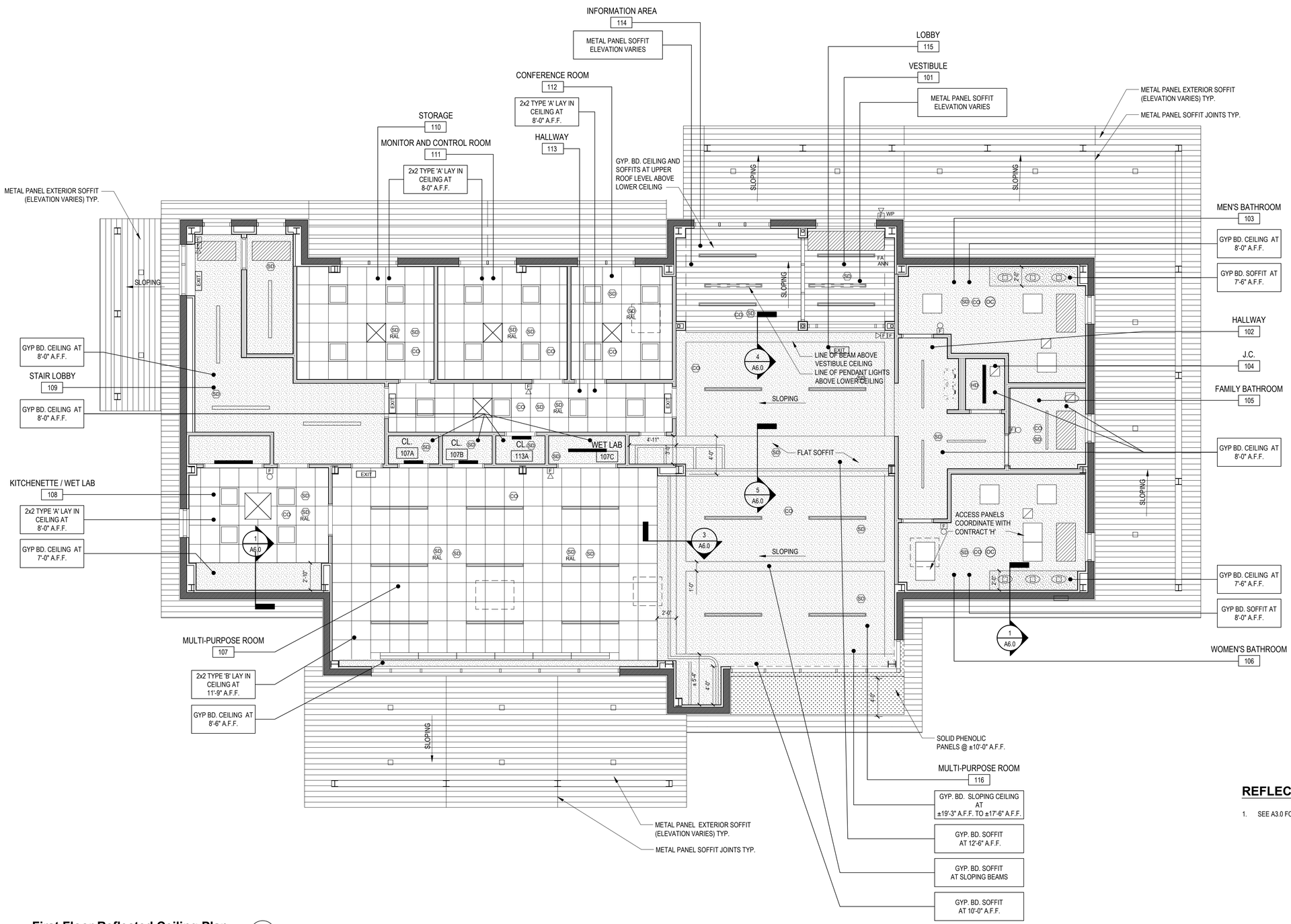

First Floor Reflected Ceiling Plan

SCALE: 3/16"=1'-0"

REFLECTED CEILING NOTES:

1. SEE A3.0 FOR ALL RCP NOTES

LEGEND

	2'x2' ACOUSTICAL CEILING TILE
	GYPSUM BOARD CEILING
	STEEL STUD AND GYPSUM BOARD PARTITION
	VENTED SOFFIT
	SUPPLY AIR DIFFUSER
	RETURN AIR DIFFUSER
EXIT	EMERGENCY EXIT SIGN
OC	OCCUPANCY SENSOR, CEILING MOUNT
	PENDANT/RECESSED LINEAR LIGHT FIXTURES
	WALL MOUNTED LINEAR LIGHT FIXTURES
	RECESSED LIGHT FIXTURE
	HIGH-HAT LIGHT FIXTURE
	ELECTRIC HEATING CEILING PANELS

PROGRAM CONSULTANT:

Living with the BAY

CLIENTS:

NEW YORK STATE OF OPPORTUNITY. Parks, Recreation and Historic Preservation

Governor's Office of Storm Recovery

PROJECT MANAGER:

Stantec

LEAD LANDSCAPE ARCHITECTS + ARCHITECTS:

H2M architects + engineers
538 Broad Hollow Road
4th Floor East
Melville, NY 11747
P:(631)756-8000
F:(631)694-4122

CERTIFIED ARBORISTS + LANDSCAPE ARCHITECTS:

CHENEY DESIGN LA & PC LANDSCAPE ARCHITECTURE PC

STRUCTURAL ENGINEERS:

LKB CONSULTING ENGINEERS

CIVIL ENGINEERS + LANDSCAPE ARCHITECTS:

Cashin Associates, P.C.
ENGINEERING - PLANNING - LAND SURVEYING - CONSTRUCTION MANAGEMENT

LANDSCAPE ARCHITECTS:

MATRIXNEWORLD Engineering Program
Matrix New World Engineering, Land Surveying
Landscape Architecture, D.P.C.
442 State Route 35, Second Floor
Eatontown, New Jersey 07724
Tel: 732-389-2999
Fax: 973-240-1818
WBE / DBE / SBE
www.matrixnewworld.com
NEW JERSEY CERTIFICATE OF AUTHORIZATION No. 24GA27982300

SEAL

"ALTERATION OF THIS DOCUMENT EXCEPT BY A LICENSED PROFESSIONAL IS ILLEGAL"

THESE DOCUMENTS CONTAIN POTENTIALLY SENSITIVE INFORMATION AND SHALL BE USED FOR THEIR INTENDED PURPOSE. ONCE THE INTENDED PURPOSE HAS CEASED, THE DOCUMENTS SHALL BE DESTROYED IN A SECURE MANNER.

IT IS A VIOLATION OF STATE EDUCATION LAW FOR ANY PERSON, UNLESS UNDER THE DIRECTION OF A LICENSED ARCHITECT TO ALTER THIS DOCUMENT IN ANYWAY. ALTERATIONS MUST HAVE THE SEAL AFFIXED ALONG WITH A DESCRIPTION OF THE ALTERATIONS, DATE AND ARCHITECT'S SIGNATURE. COPYRIGHT © 2012

PHASE
90% SUBMISSION

Revisions

Number	Description	Date:
1		
2		
3		
4		
5		

Project Title

HEMPSTEAD LAKE STATE PARK

CONTRACT
NYSP
WORK ORDER: LI-022
CONTRACT: D004472
COA: 1290350/30377/33001/ PRK 4559

PROJECT #: NYSP-1503
DATE: JULY 2017
DESIGNED BY:
DRAWN BY:
CHECKED BY:
REVIEWED BY:

SHEET TITLE
FIRST FLOOR REFLECTED CEILING PLAN

SHEET #
A3.1

C:\Users\aconcepcion\appdata\local\temp\AcPublish_14424\A3.1 - 1st Floor RCP.dwg Last Modified: Jul 19, 2017 - 6:29pm Plotted on: Jul 19, 2017 - 6:31pm By: aconcepcion

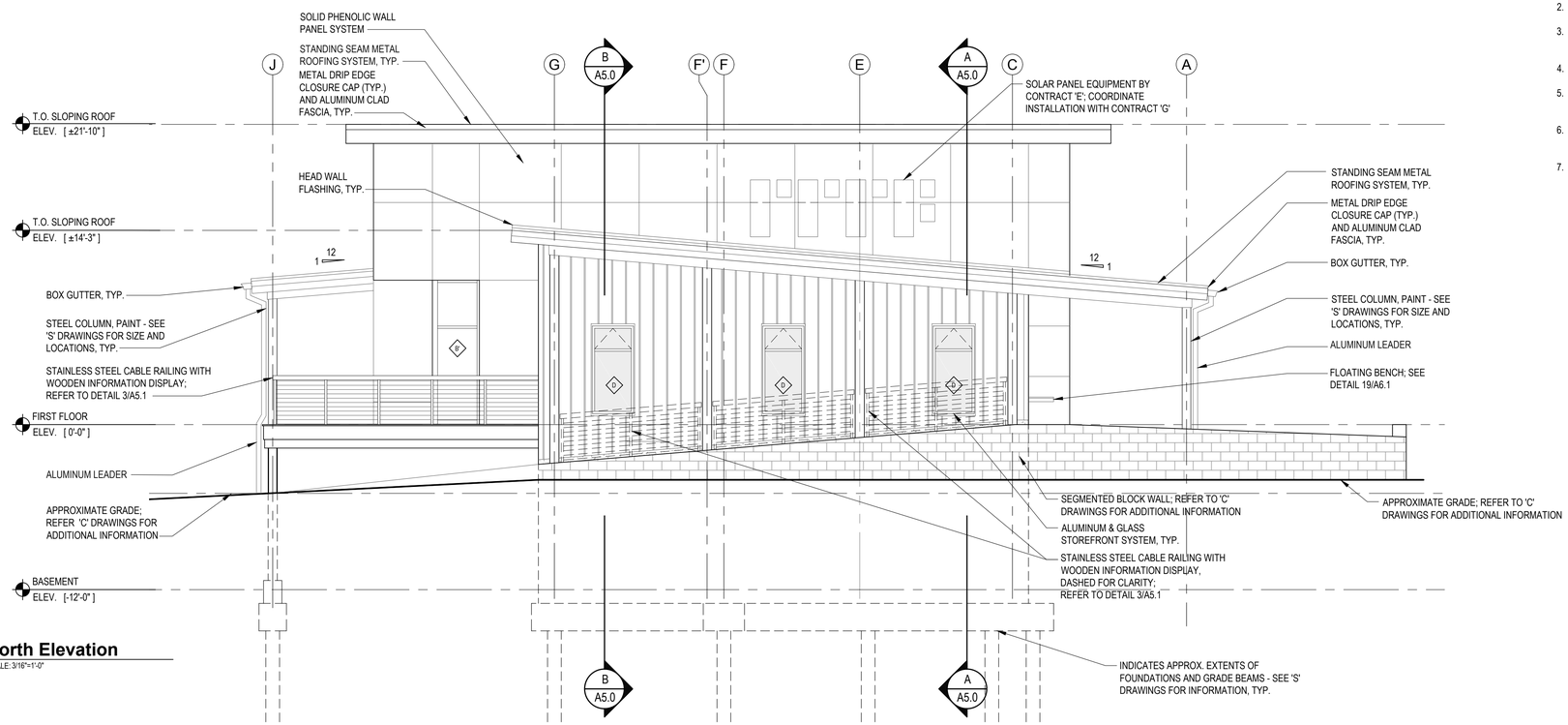

1 North Elevation
SCALE: 3/16"=1'-0"

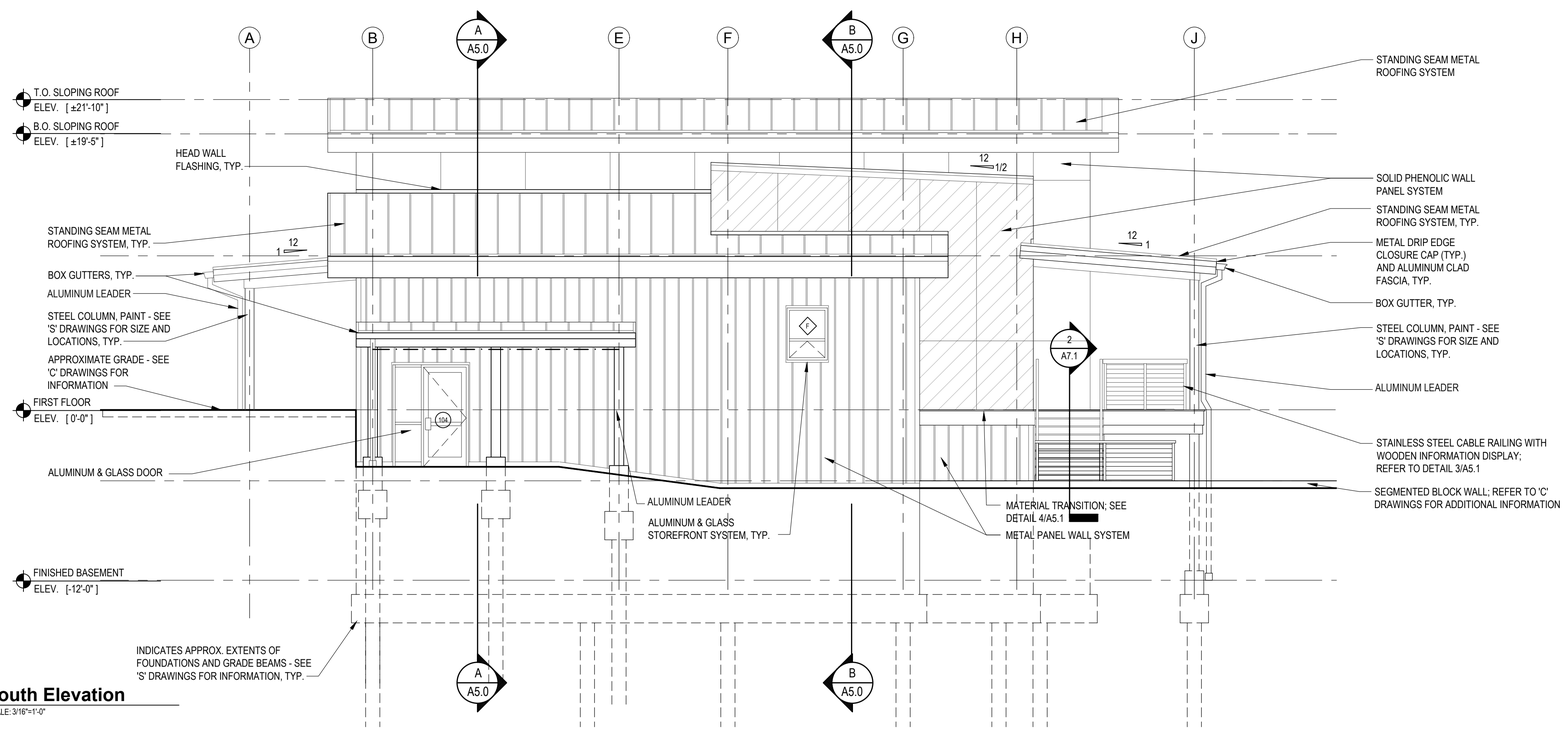

2 South Elevation
SCALE: 3/16"=1'-0"

BUILDING ELEVATION NOTES:

1. FOR ALL WINDOWS DENOTED AS ◇ SEE DRAWINGS A11.0 & A11.1 FOR ADDITIONAL INFORMATION.
2. FOR ALL DOORS DENOTED AS ○ SEE DRAWINGS A10.0 & A10.1 FOR ADDITIONAL INFORMATION.
3. ALL PAINTING SHALL BE PERFORMED IN ACCORDANCE WITH THE REQUIREMENTS CONTAINED IN SECTION 099000 OF THE SPECIFICATIONS.
4. ALL EXPOSED CONCRETE TO BE WATERPROOFED.
5. FOOTING AND FOUNDATION DEPTHS, SIZES, ETC. PROVIDED IN ELEVATIONS ARE FOR DIAGRAMMATIC PURPOSES ONLY. SEE 'S' DRAWINGS FOR ACTUAL SIZES.
6. PROVIDE SMOOTH RUBBED FINISH IN ACCORDANCE WITH ACI 301 FOR ALL EXPOSED AREAS OF CONCRETE FOUNDATIONS.
7. PROVIDE CAST IRON, OFFSET RECTANGULAR PROFILE, MODEL R-4929 SERIES MANUFACTURED BY NENNAH OR APPROVED EQUAL. (TYP. FOR ALL DOWNSPOUT LOCATIONS.)PROVIDE PROPER SIZE PIPE FITTINGS FOR CONNECTION TO DRAIN PIPE.

LEGEND

SYMBOL	DESCRIPTION
	STANDING SEAM METAL ROOFING SYSTEM
	METAL PANEL WALL SYSTEM
	SOLID PHENOLIC WALL PANEL SYSTEM
	EXPOSED CONCRETE
	SEGMENTED BLOCK WALL
	PRIVACY FROSTED GLASS
	INDICATES APPROX LOCATION OF STRUCTURAL STEEL AT WALL PANEL OPENINGS- (SEE 'S' DRAWINGS FOR SIZES & LOCATIONS

SOLID PHENOLIC WALL PANEL LEGEND

SYMBOL	DESCRIPTION
	WALL PANEL TYPE 1
	WALL PANEL TYPE 2

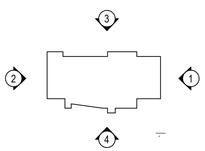

Key Plan
SCALE: 1/64"= 1'-0"

PROGRAM CONSULTANT:

CLIENTS:

PROJECT MANAGER:

LEAD LANDSCAPE ARCHITECTS + ARCHITECTS:

H2M architects + engineers
538 Broad Hollow Road
4th Floor East
Melville, NY 11747
P:(631)756-8000
F:(631)694-4122

CERTIFIED ARBORISTS + LANDSCAPE ARCHITECTS:

STRUCTURAL ENGINEERS:

CIVIL ENGINEERS + LANDSCAPE ARCHITECTS:

LANDSCAPE ARCHITECTS:

MATRIXNEWORLD
Engineering Program
Matrix New World Engineering, Land Surveying
and Landscape Architecture, P.C.
442 State Route 35, Second Floor
Eatontown, New Jersey 07724
Tel: 732-389-2999
Fax: 973-240-1818
WBE / DBE / SBE
www.matrixnewworld.com
NEW JERSEY CERTIFICATE OF AUTHORIZATION No. 24GA27982000

SEAL

"ALTERATION OF THIS DOCUMENT EXCEPT BY A LICENSED PROFESSIONAL IS ILLEGAL"

THESE DOCUMENTS CONTAIN POTENTIALLY SENSITIVE INFORMATION AND SHALL BE USED FOR THEIR INTENDED PURPOSE. ONCE THE INTENDED PURPOSE HAS CEASED, THE DOCUMENTS SHALL BE DESTROYED IN A SECURE MANNER.

IT IS A VIOLATION OF STATE EDUCATION LAW FOR ANY PERSON, UNLESS UNDER THE DIRECTION OF A LICENSED ARCHITECT TO ALTER THIS DOCUMENT IN ANYWAY. ALTERATIONS MUST HAVE THE SEAL AFFIXED ALONG WITH A DESCRIPTION OF THE ALTERATIONS, DATE AND ARCHITECT'S SIGNATURE. COPYRIGHT © 2012

PHASE
90% SUBMISSION

Revisions

Number	Description	Date:
1		
2		
3		
4		
5		

Project Title

HEMPSTEAD LAKE STATE PARK

CONTRACT
NYSP
WORK ORDER: LI-022
CONTRACT: D004472
COA: 1290350/30377/33001/ PRK 4559

PROJECT #: NYSP-1503

DATE: JULY 2017

DESIGNED BY:

DRAWN BY:

CHECKED BY:

REVIEWED BY:

SHEET TITLE

BUILDING ELEVATIONS

SHEET #
A4.0

C:\Users\aconcepcion\appdata\local\temp\AcPublish_8208\A4.0 - Elevations.dwg Last Modified: Jul 18, 2017 - 7:54pm Plotted on: Jul 25, 2017 - 12:10pm By: aconcepcion

BUILDING ELEVATION NOTES:

1. SEE DRAWING A4.0 FOR BUILDING ELEVATION NOTES AND LEGEND.

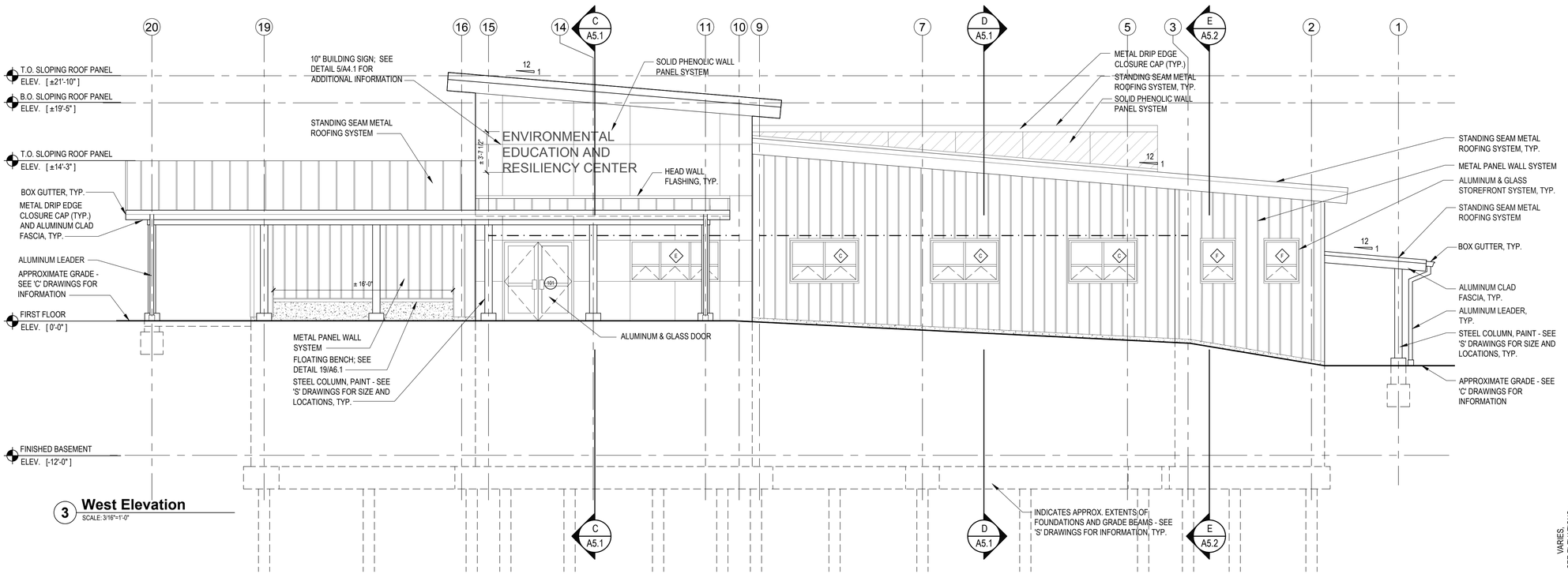

3 West Elevation
SCALE: 3/16"=1'-0"

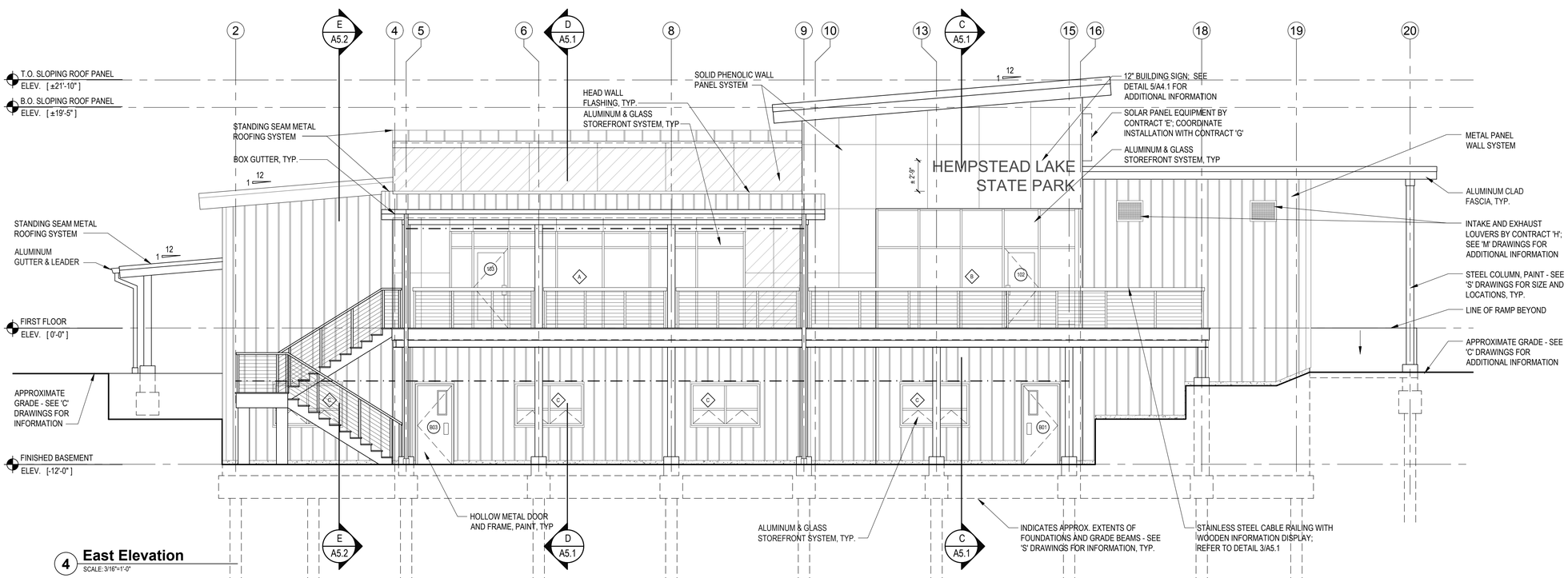

4 East Elevation
SCALE: 3/16"=1'-0"

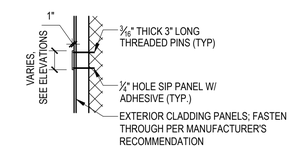

5 Cast Aluminum Lettering
N.T.S.

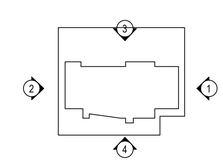

Key Plan
SCALE: 1/64"= 1'-0"

PROGRAM CONSULTANT:

CLIENTS:

Parks, Recreation and Historic Preservation

Governor's Office of Storm Recovery

PROJECT MANAGER:

Stantec

LEAD LANDSCAPE ARCHITECTS + ARCHITECTS:

H2M architects + engineers
538 Broad Hollow Road
4th Floor East
Melville, NY 11747
P:(631)756-8000
F:(631)694-4122

CERTIFIED ARBORISTS + LANDSCAPE ARCHITECTS:

CHENEY DESIGN LA & PC

STRUCTURAL ENGINEERS:

LKB CONSULTING ENGINEERS

CIVIL ENGINEERS + LANDSCAPE ARCHITECTS:

Cashin Associates, P.C.

LANDSCAPE ARCHITECTS:

MATRIXNEWORLD Engineering Program
Matrix New World Engineering, Land Surveying
and Landscape Architecture, P.C.
442 State Route 35, Second Floor
Eatontown, New Jersey 07724
MNE / DBE / SBE
NEW JERSEY CERTIFICATE OF AUTHORIZATION No. 24GA27962000
Tel: 732-389-2999
Fax: 973-240-1818
www.matrixnewworld.com

SEAL

"ALTERATION OF THIS DOCUMENT EXCEPT BY A LICENSED PROFESSIONAL IS ILLEGAL"

THESE DOCUMENTS CONTAIN POTENTIALLY SENSITIVE INFORMATION AND SHALL BE USED FOR THEIR INTENDED PURPOSE. ONCE THE INTENDED PURPOSE HAS CEASED, THE DOCUMENTS SHALL BE DESTROYED IN A SECURE MANNER.

IT IS A VIOLATION OF STATE EDUCATION LAW FOR ANY PERSON, UNLESS UNDER THE DIRECTION OF A LICENSED ARCHITECT TO ALTER THIS DOCUMENT IN ANYWAY. ALTERATIONS MUST HAVE THE SEAL AFFIXED ALONG WITH A DESCRIPTION OF THE ALTERATIONS, DATE AND ARCHITECT'S SIGNATURE. COPYRIGHT © 2012

PHASE:
90% SUBMISSION

Revisions

Number	Description	Date:
1		
2		
3		
4		
5		

Project Title

HEMPSTEAD LAKE STATE PARK

CONTRACT
NYSP
WORK ORDER: LI-022
CONTRACT: D004472
COA: 1290350/30377/33001/ PRK 4559

PROJECT #: NYSP-1503
DATE: JULY 2017
DESIGNED BY: ACP
DRAWN BY: TJS
CHECKED BY:
REVIEWED BY:

SHEET TITLE

BUILDING ELEVATIONS

SHEET #
A4.1

C:\Users\aconcepcion\appdata\local\temp\AcPublish_5268\A4.1 - Elevations.dwg Last Modified: Jul 20, 2017 - 3:23pm Plotted on: Jul 25, 2017 - 12:22pm By: aconcepcion

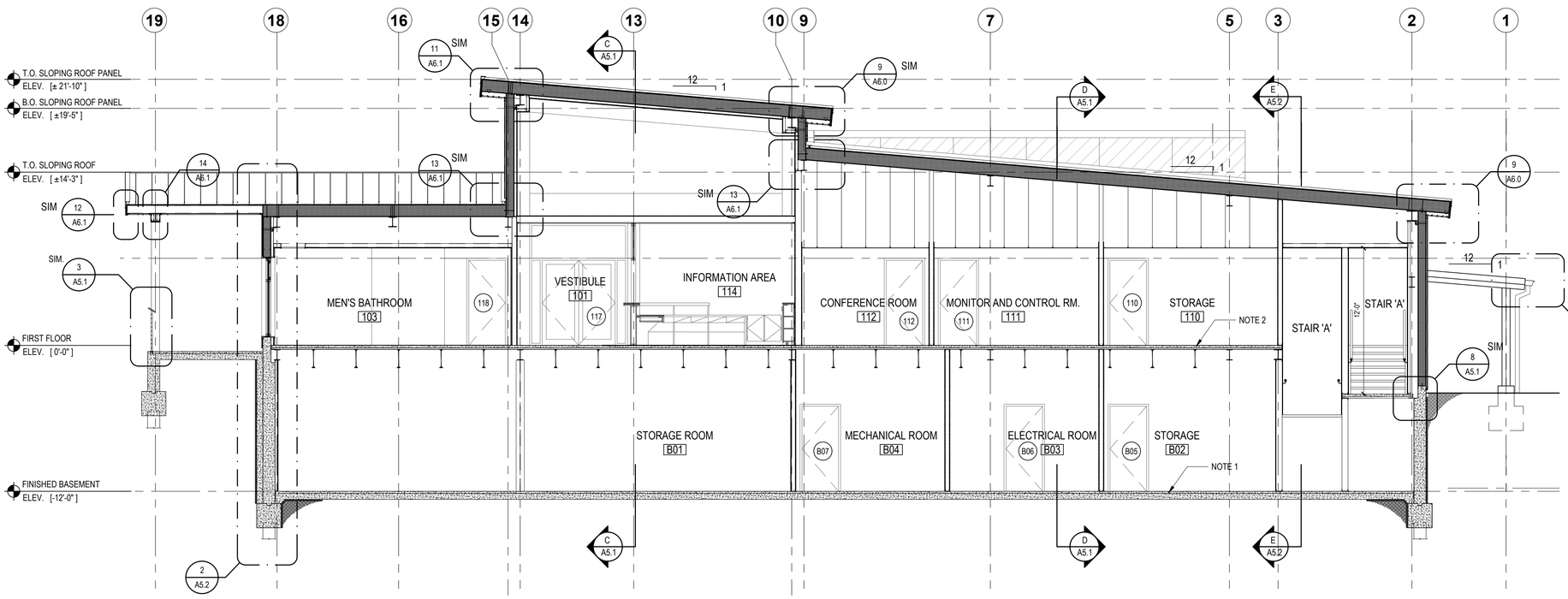

A Building Section

SCALE: 3/16"=1'-0"

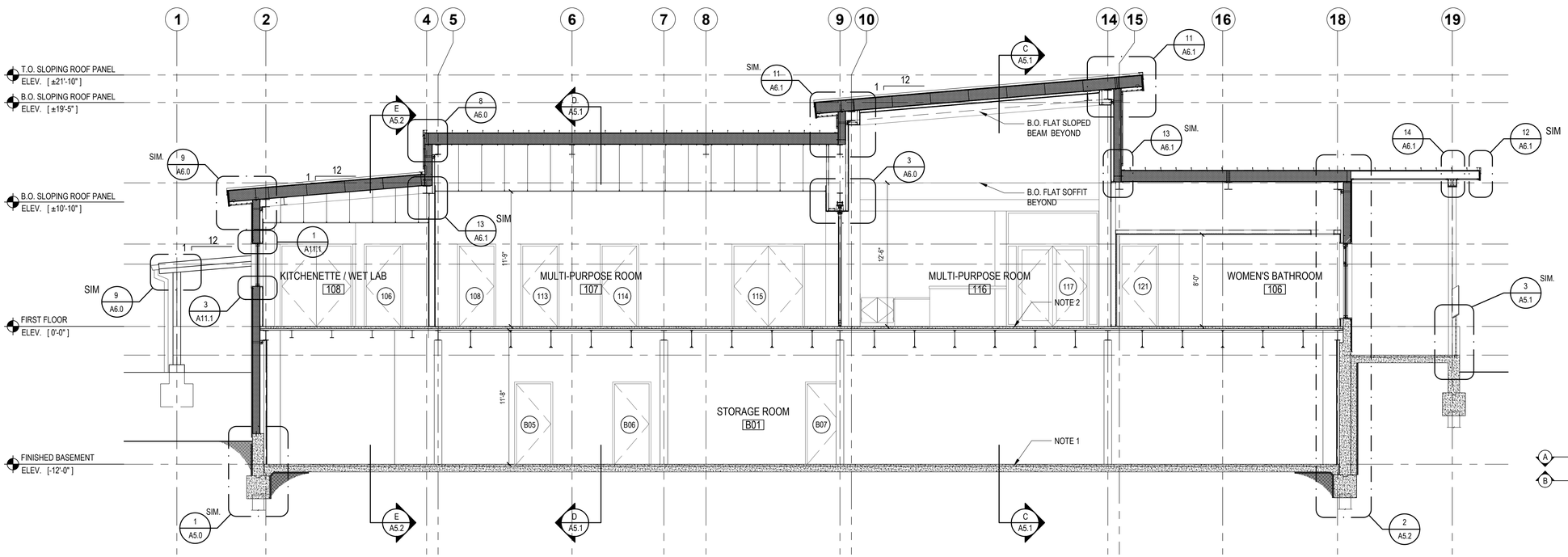

B Building Section

SCALE: 3/16"=1'-0"

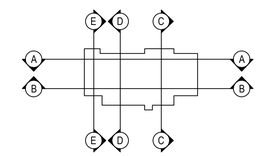

Key Plan

SCALE: 1/64"= 1'-0"

BUILDING SECTION NOTES:

1. REINFORCED P.C. SLAB, INSULATED VAPOR BARRIER, AND PERIMETER RIGID INSULATION ON COMPACTED SUB-GRADE. SEE 'S' DRAWINGS FOR SLAB THICKNESS AND REINFORCING, FINISH AS SCHEDULED.
2. REINFORCED P.C. SLAB ON GALVANIZED METAL DECK. SEE 'S' DRAWINGS FOR DECK INFORMATION, SLAB THICKNESS AND REINFORCING.
3. REINFORCED P.C. SLAB ON COMPACTED SUBGRADE. SEE 'C' DRAWINGS FOR SLAB THICKNESS AND REINFORCING.
4. STRUCTURAL INFORMATION SHOWN IN SECTIONS IS DIAGRAMMATIC, SEE 'S' DRAWINGS FOR SPECIFIC INFORMATION.
5. SEE DRAWING G2.0 FOR ALL FIRE RATING INFORMATION, LOCATION OF SPRAY ON FIREPROOFING AND ADDITIONAL INFORMATION. WHERE STEEL FRAMING INTERSECTS WALLS MID-SPAN, FLEXIBLE INTUMESCENT FIRE BLOCK MATERIAL SHALL BE PROVIDED, AS REQ'D TO FILL ALL ANNULAR SPACES COMPLETELY AND MAINTAIN DESIRED FIRE RATING, TYP.
6. FOR ALL WALL TYPES, SEE DRAWING G1.0.
7. FOR ALL WINDOWS DENOTED AS ◇ SEE DRAWINGS A11.0 FOR ADDITIONAL INFORMATION.
8. FOR ALL DOORS DENOTED AS ⊙ SEE DRAWING A10.0 FOR ADDITIONAL INFORMATION.

PROGRAM CONSULTANT:

Living with the BAY

CLIENTS:

NEW YORK STATE OF OPPORTUNITY. Parks, Recreation and Historic Preservation

Governor's Office of Storm Recovery

PROJECT MANAGER:

Stantec

LEAD LANDSCAPE ARCHITECTS + ARCHITECTS:

H2M architects + engineers
538 Broad Hollow Road
4th Floor East
Melville, NY 11747
P:(631)756-8000
F:(631)694-4122

CERTIFIED ARBORISTS + LANDSCAPE ARCHITECTS:

CHENEY DESIGN LA & PC LANDSCAPE ARCHITECTURE PC

STRUCTURAL ENGINEERS:

LKB CONSULTING ENGINEERS

CIVIL ENGINEERS + LANDSCAPE ARCHITECTS:

Cashin Associates, P.C.
ENGINEERING - PLANNING - CONSTRUCTION MANAGEMENT

LANDSCAPE ARCHITECTS:

MATRIXNEWORLD
Engineering Program
Matrix New World Engineering, Land Surveying
Landscape Architecture, D.P.C.
442 State Route 35, Second Floor
Eatontown, New Jersey 07724
Tel: 732-389-2999
Fax: 973-240-1818
WBE / DBE / SBE
www.matrixnewworld.com
NEW JERSEY CERTIFICATE OF AUTHORIZATION No. 24GA27982300

SEAL

"ALTERATION OF THIS DOCUMENT EXCEPT BY A LICENSED PROFESSIONAL IS ILLEGAL"

THESE DOCUMENTS CONTAIN POTENTIALLY SENSITIVE INFORMATION AND SHALL BE USED FOR THEIR INTENDED PURPOSE. ONCE THE INTENDED PURPOSE HAS CEASED, THE DOCUMENTS SHALL BE DESTROYED IN A SECURE MANNER.

IT IS A VIOLATION OF STATE EDUCATION LAW FOR ANY PERSON, UNLESS UNDER THE DIRECTION OF A LICENSED ARCHITECT TO ALTER THIS DOCUMENT IN ANYWAY. ALTERATIONS MUST HAVE THE SEAL AFFIXED ALONG WITH A DESCRIPTION OF THE ALTERATIONS, DATE AND ARCHITECT'S SIGNATURE. COPYRIGHT © 2012

PHASE
90% SUBMISSION

Revisions

Number	Description	Date:
1		
2		
3		
4		
5		

Project Title

HEMPSTEAD LAKE STATE PARK

CONTRACT
NYSP
WORK ORDER: LI-022
CONTRACT: D004472
COA: 1290350/30377/33001/ PRK 4559

PROJECT # NYSP-1503
DATE: JULY 2017
DESIGNED BY: ACP
DRAWN BY: ALC
CHECKED BY:
REVIEWED BY:

SHEET TITLE
BUILDING SECTIONS

SHEET # **A5.0**

C:\Users\aconcepcion\appdata\local\temp\AcPublish_6280\A5.0 - Sections.dwg Last Modified: Jul 07, 2017 - 6:14pm Plotted on: Jul 18, 2017 - 6:15pm By: aconcepcion

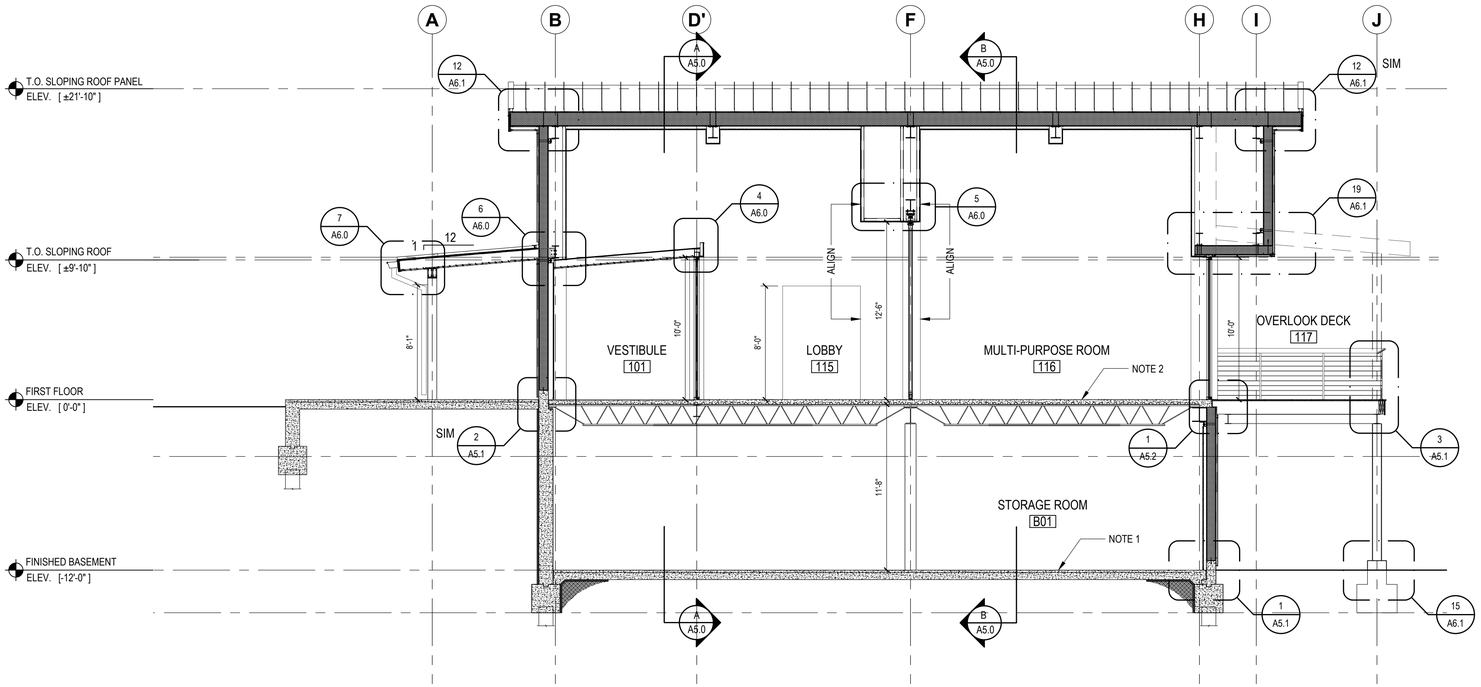

C Building Section
SCALE: 3/16"=1'-0"

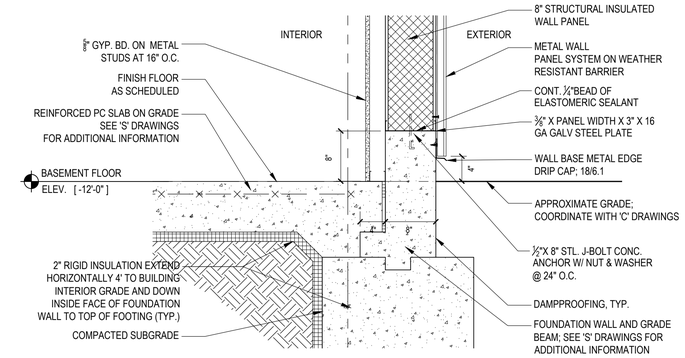

1 Typ. Wall Base Detail @ Slab on Grade
SCALE: 1"=1'-0"

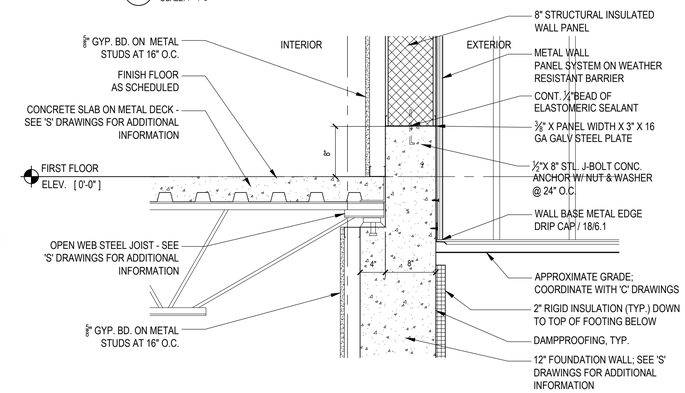

2 Typ. Wall Base Detail @ Slab on Metal Deck
SCALE: 1"=1'-0"

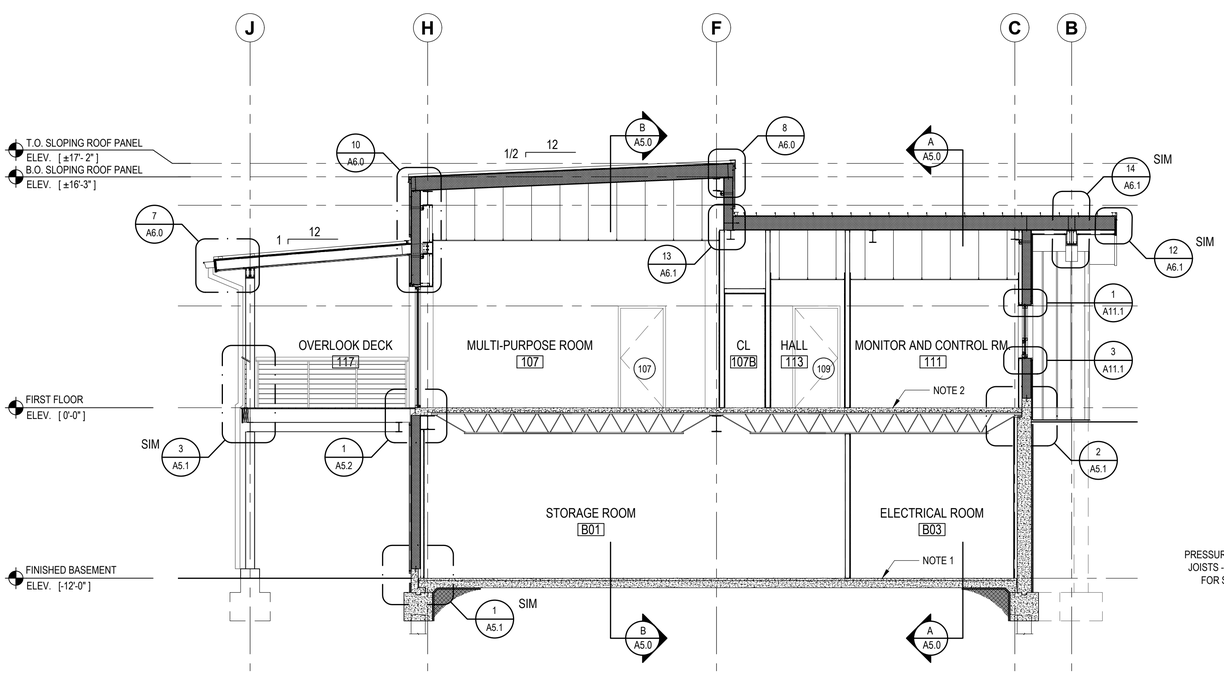

D Building Section
SCALE: 3/16"=1'-0"

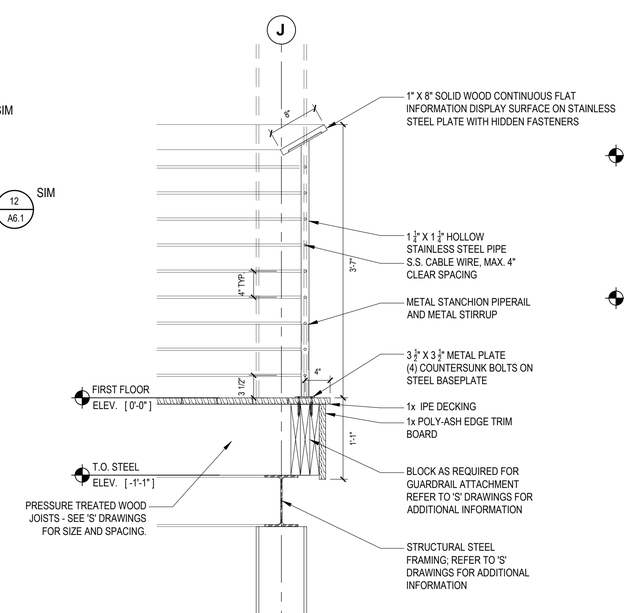

3 Guardrail Section/Elevation
SCALE: 1"=1'-0"

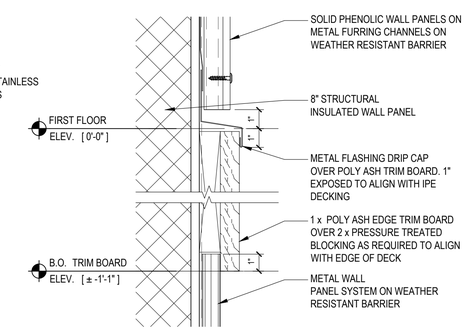

4 South Wall Material Transition
SCALE: 3"=1'-0"

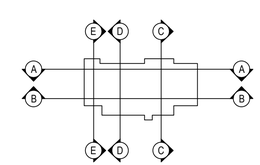

Key Plan
SCALE: 1/64"= 1'-0"

BUILDING SECTION NOTES:

SEE DRAWING A5.0 FOR BUILDING SECTION NOTES

PROGRAM CONSULTANT:

Living with the BAY

CLIENTS:

NEW YORK STATE OF OPPORTUNITY. Parks, Recreation and Historic Preservation

Governor's Office of Storm Recovery

PROJECT MANAGER:

Stantec

LEAD LANDSCAPE ARCHITECTS + ARCHITECTS:

H2M architects + engineers
538 Broad Hollow Road
4th Floor East
Melville, NY 11747
P:(631)756-8000
F:(631)694-4122

CERTIFIED ARBORISTS + LANDSCAPE ARCHITECTS:

CHENEY DESIGN L.A. & P.C. LANDSCAPE ARCHITECTURE PC

STRUCTURAL ENGINEERS:

LKB CONSULTING ENGINEERS

CIVIL ENGINEERS + LANDSCAPE ARCHITECTS:

Cashin Associates, P.C. ENGINEERING - PLANNING - CONSTRUCTION MANAGEMENT

LANDSCAPE ARCHITECTS:

MATRIXNEWORLD Engineering Program
Matrix New World Engineering, Land Surveying
and Landscape Architecture, P.C.
442 State Route 35, Second Floor
Eatontown, New Jersey 07724
WBE / DBE / SBE
NEW JERSEY CERTIFICATE OF AUTHORIZATION No. 24GA27962000
Tel: 732-389-2999
Fax: 973-240-1818
www.matrixnewworld.com

SEAL

"ALTERATION OF THIS DOCUMENT EXCEPT BY A LICENSED PROFESSIONAL IS ILLEGAL"

THESE DOCUMENTS CONTAIN POTENTIALLY SENSITIVE INFORMATION AND SHALL BE USED FOR THEIR INTENDED PURPOSE. ONCE THE INTENDED PURPOSE HAS CEASED, THE DOCUMENTS SHALL BE DESTROYED IN A SECURE MANNER.

IT IS A VIOLATION OF STATE EDUCATION LAW FOR ANY PERSON, UNLESS UNDER THE DIRECTION OF A LICENSED ARCHITECT TO ALTER THIS DOCUMENT IN ANYWAY. ALTERATIONS MUST HAVE THE SEAL AFFIXED ALONG WITH A DESCRIPTION OF THE ALTERATIONS, DATE AND ARCHITECT'S SIGNATURE. COPYRIGHT © 2012

PHASE
90% SUBMISSION

Revisions

Number	Description	Date:
1		
2		
3		
4		
5		

Project Title

HEMPSTEAD LAKE STATE PARK

CONTRACT
NYSP
WORK ORDER: LI-022
CONTRACT: D004472
COA: 1290350/303377/33001/ PRK 4559

PROJECT #: NYSP-1503
DATE: JULY 2017
DESIGNED BY: ACP
DRAWN BY: ALC
CHECKED BY:
REVIEWED BY:

SHEET TITLE
BUILDING SECTIONS AND DETAILS

SHEET # **A5.1**

C:\Users\aconcepcion\appdata\local\temp\AcPublish_2c89\A5.1 - Sections.dwg Last Modified: Jul 24, 2017 - 4:12pm Plotted on: Jul 24, 2017 - 4:12pm By: aconcepcion

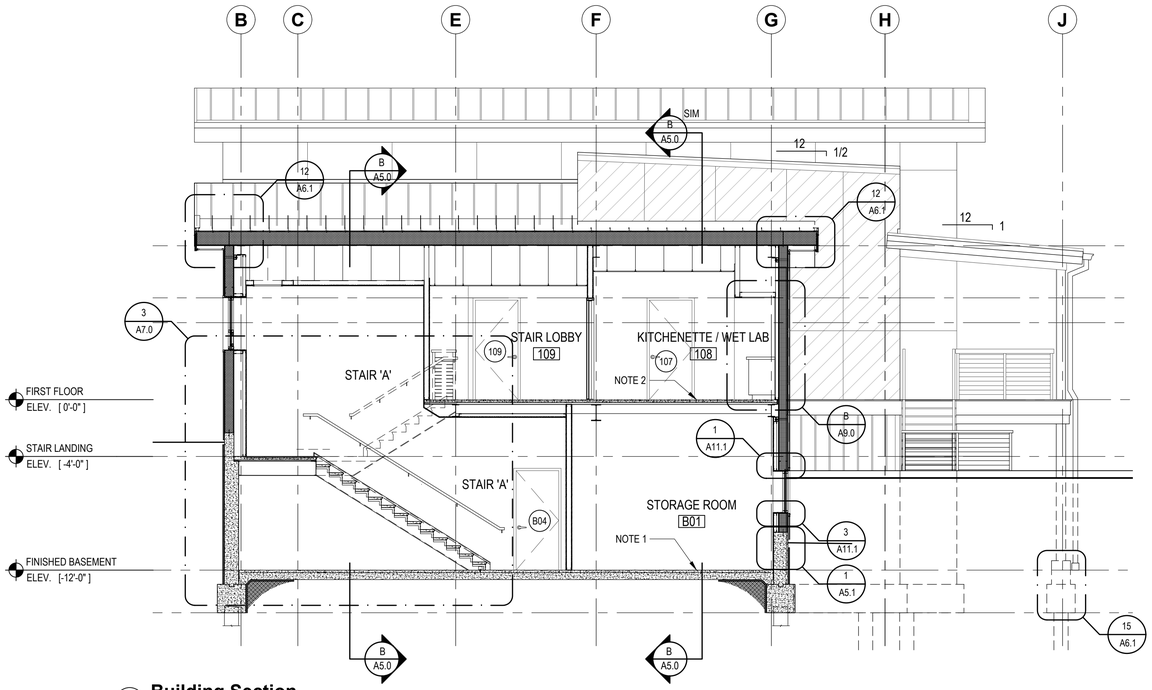

E Building Section

SCALE: 3/16"=1'-0"

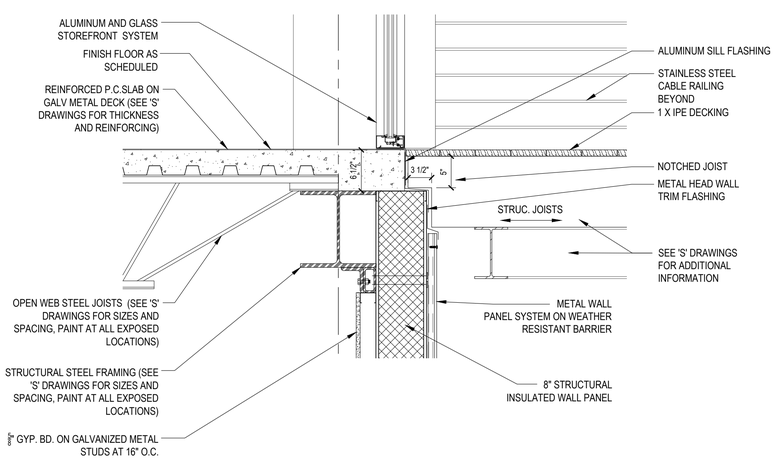

1 Detail @ Deck Edge

SCALE: 1"=1'-0"

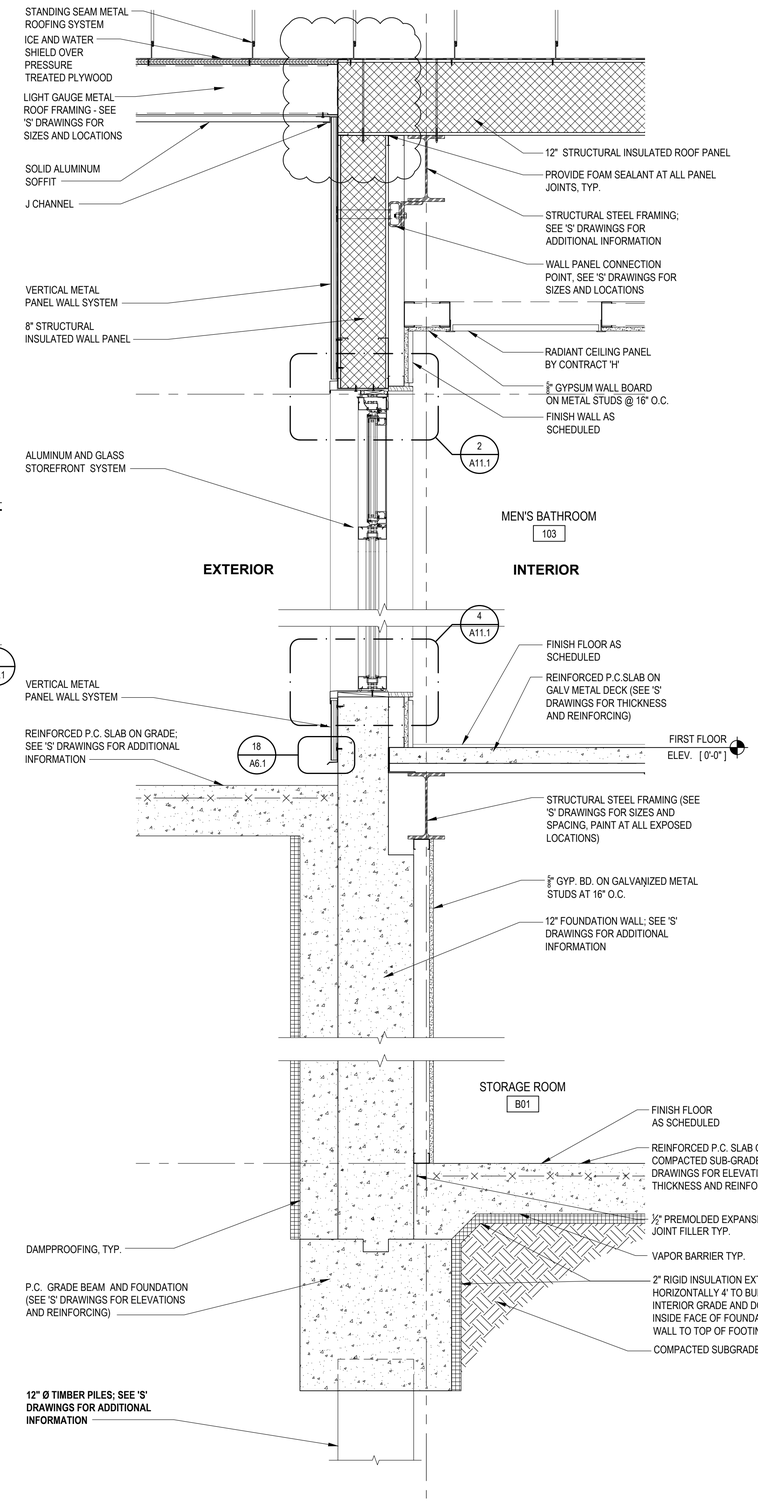

2 Wall Section

SCALE: 1"=1'-0"

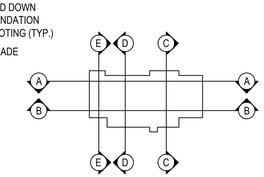

Key Plan

SCALE: 1/64"= 1'-0"

BUILDING SECTION NOTES:

SEE DRAWING A5.0 FOR BUILDING SECTION NOTES

PROGRAM CONSULTANT:

Living with the BAY

CLIENTS:

NEW YORK STATE OF OPPORTUNITY. Parks, Recreation and Historic Preservation

Governor's Office of Storm Recovery

PROJECT MANAGER:

Stantec

LEAD LANDSCAPE ARCHITECTS + ARCHITECTS:

H2M architects + engineers
538 Broad Hollow Road
4th Floor East
Melville, NY 11747
P:(631)756-8000
F:(631)694-4122

CERTIFIED ARBORISTS + LANDSCAPE ARCHITECTS:

CHENEY DESIGN LA & PC LANDSCAPE ARCHITECTURE PC

STRUCTURAL ENGINEERS:

LKB CONSULTING ENGINEERS

CIVIL ENGINEERS + LANDSCAPE ARCHITECTS:

Cashin Associates, P.C. ENGINEERING - PLANNING - CONSTRUCTION MANAGEMENT

LANDSCAPE ARCHITECTS:

MATRIXNEWORLD Engineering Program
Matrix New World Engineering, Land Surveying
Architecture and Landscape P.C.
442 State Route 35, Second Floor
Eatontown, New Jersey 07724
WBE / DBE / SBE
NEW JERSEY CERTIFICATE OF AUTHORIZATION No. 24GA27962000
Tel: 732-389-2999
Fax: 973-240-1818
www.matrixnewworld.com

SEAL

"ALTERATION OF THIS DOCUMENT EXCEPT BY A LICENSED PROFESSIONAL IS ILLEGAL"

THESE DOCUMENTS CONTAIN POTENTIALLY SENSITIVE INFORMATION AND SHALL BE USED FOR THEIR INTENDED PURPOSE. ONCE THE INTENDED PURPOSE HAS CEASED, THE DOCUMENTS SHALL BE DESTROYED IN A SECURE MANNER.

IT IS A VIOLATION OF STATE EDUCATION LAW FOR ANY PERSON, UNLESS UNDER THE DIRECTION OF A LICENSED ARCHITECT TO ALTER THIS DOCUMENT IN ANYWAY. ALTERATIONS MUST HAVE THE SEAL AFFIXED ALONG WITH A DESCRIPTION OF THE ALTERATIONS, DATE AND ARCHITECT'S SIGNATURE. COPYRIGHT © 2012

PHASE

90% SUBMISSION

Revisions

Number	Description	Date:
1		
2		
3		
4		
5		

Project Title

HEMPSTEAD LAKE STATE PARK

CONTRACT

NYSP
WORK ORDER: LI-022
CONTRACT: D004472
COA: 1290350/30377/33001/ PRK 4559

PROJECT #: NYSP-1503

DATE: JULY 2017

DESIGNED BY:

DRAWN BY:

CHECKED BY: REVIEWED BY:

SHEET TITLE

BUILDING SECTION AND DETAILS

SHEET # **A5.2**

C:\Users\aconcepcion\appdata\local\temp\AcPublish_5280\A5.2 - Sections.dwg Last Modified: Jul 18, 2017 - 6:25pm Plotted on: Jul 18, 2017 - 7:56pm By aconcepcion

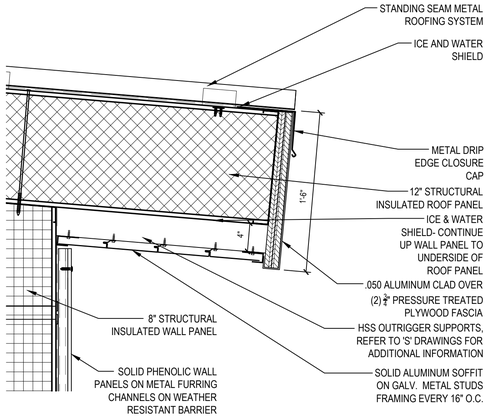

9 Typical Eave/Gutter Detail

SCALE: 1 1/2" : 1'-0"

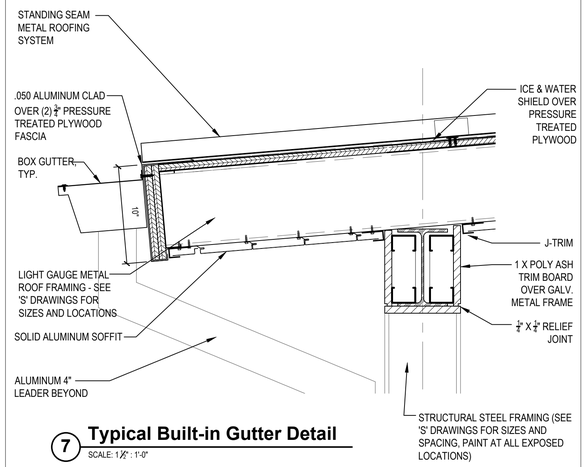

7 Typical Built-in Gutter Detail

SCALE: 1 1/2" : 1'-0"

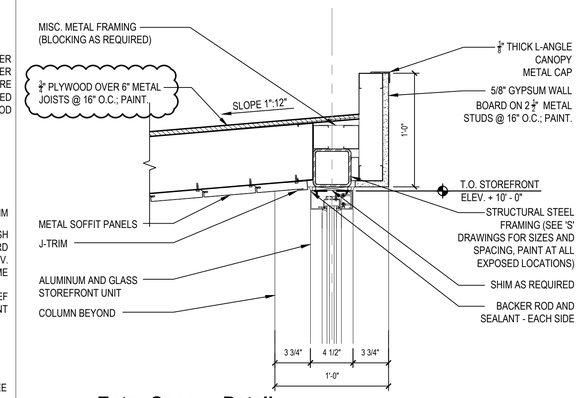

4 Entry Canopy Detail

SCALE: 1 1/2" : 1'-0"

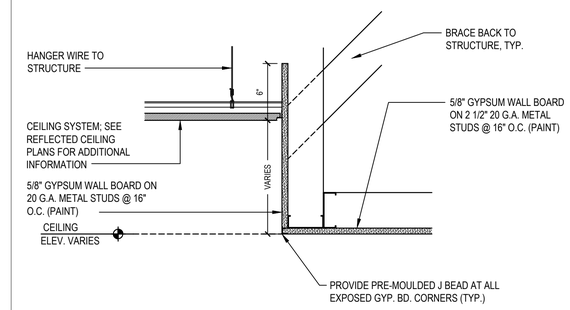

1 Soffit Detail

SCALE: 1 1/2" : 1'-0"

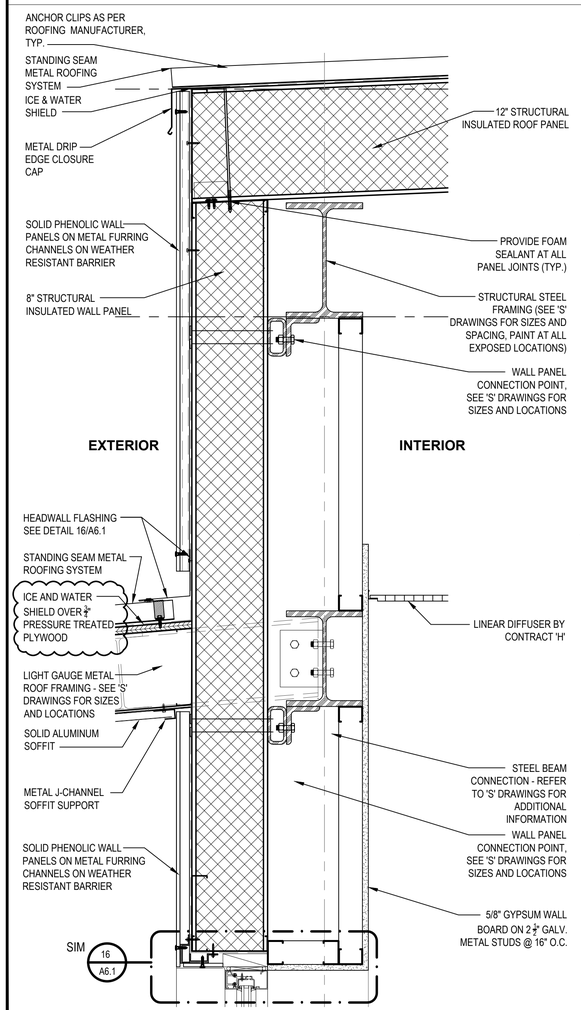

10 Roof Edge Detail @ Multi-Purpose Rm.

SCALE: 1 1/2" = 1'-0"

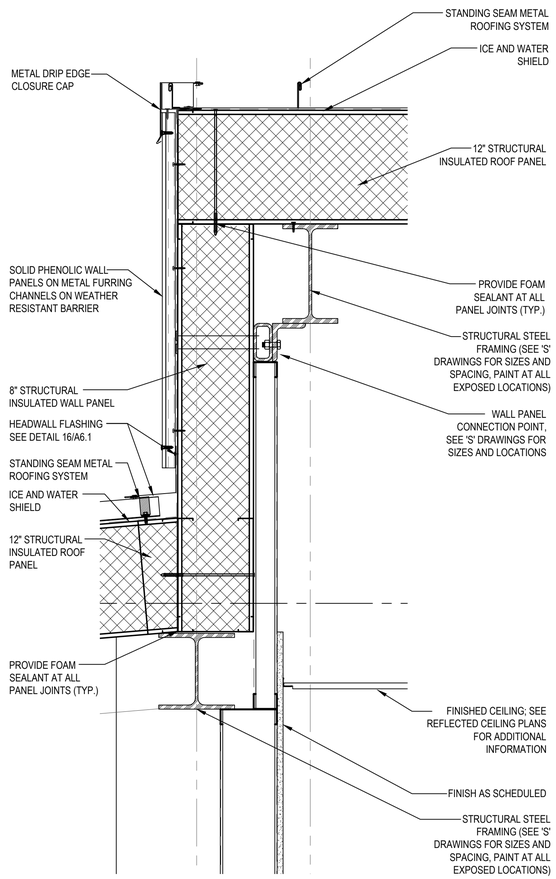

8 Roof Edge Detail

SCALE: 1 1/2" = 1'-0"

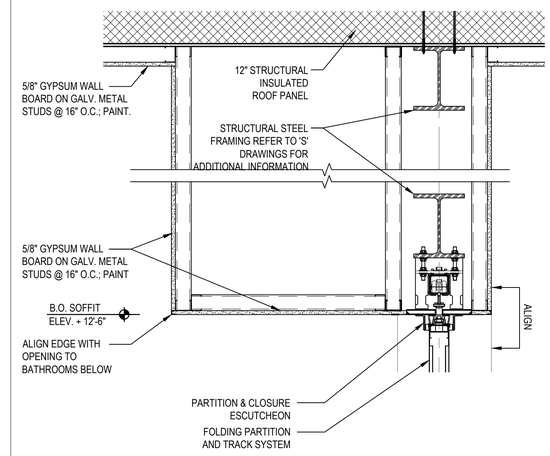

5 Soffit Detail - Door Partition

SCALE: 1" : 1'-0"

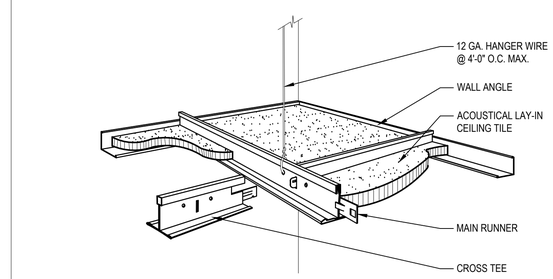

2 Acoustic Ceiling Panel Detail (TYP.)

NOT TO SCALE

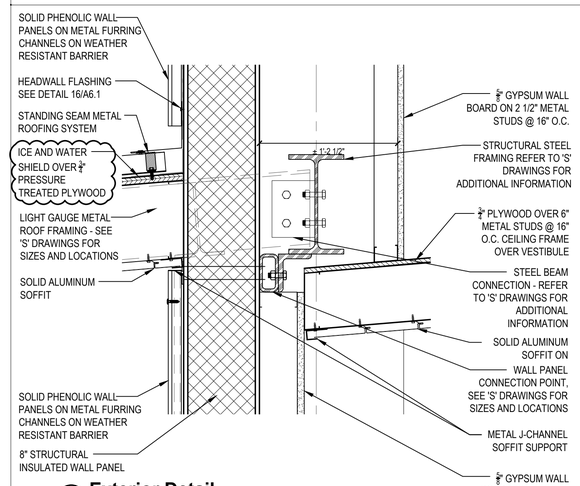

6 Exterior Detail

SCALE: 1 1/2" : 1'-0"

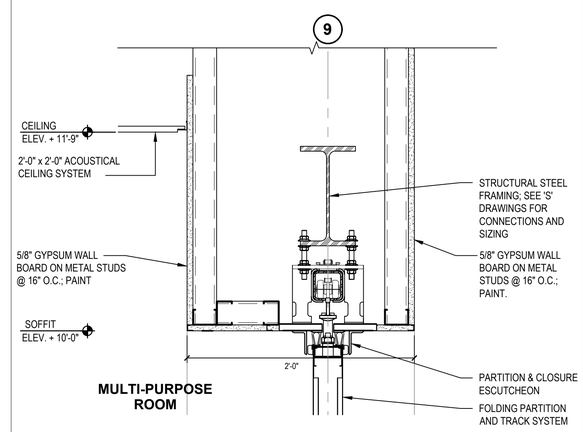

3 Soffit Transition Detail

SCALE: 1 1/2" : 1'-0"

PROGRAM CONSULTANT:

Living with the BAY

CLIENTS:

NEW YORK STATE OF OPPORTUNITY. Parks, Recreation and Historic Preservation

Governor's Office of Storm Recovery

PROJECT MANAGER:

Stantec

LEAD LANDSCAPE ARCHITECTS + ARCHITECTS:

H2M architects + engineers
538 Broad Hollow Road
4th Floor East
Melville, NY 11747
P:(631)756-8000
F:(631)694-6122

CERTIFIED ARBORISTS + LANDSCAPE ARCHITECTS:

CHENEY DESIGN LA & PC LANDSCAPE ARCHITECTURE PC

STRUCTURAL ENGINEERS:

LKB CONSULTING ENGINEERS

CIVIL ENGINEERS + LANDSCAPE ARCHITECTS:

Cashin Associates, P.C.
ENGINEERING - PLANNING - ENVIRONMENTAL - CONSTRUCTION MANAGEMENT

LANDSCAPE ARCHITECTS:

MATRIXNEWORLD
Engineering Program
Matrix New World Engineering, Land Surveying
Landscape Architecture, D.P.C.
442 State Route 35, Second Floor
Eatontown, New Jersey 07724
Tel: 732-389-2999
Fax: 973-240-1818
WBE / DBE / SBE
www.matrixnewworld.com
NEW JERSEY CERTIFICATE OF AUTHORIZATION No. 24GA27982000

SEAL

"ALTERATION OF THIS DOCUMENT EXCEPT BY A LICENSED PROFESSIONAL IS ILLEGAL"

THESE DOCUMENTS CONTAIN POTENTIALLY SENSITIVE INFORMATION AND SHALL BE USED FOR THEIR INTENDED PURPOSE. ONCE THE INTENDED PURPOSE HAS CEASED, THE DOCUMENTS SHALL BE DESTROYED IN A SECURE MANNER.

IT IS A VIOLATION OF STATE EDUCATION LAW FOR ANY PERSON, UNLESS UNDER THE DIRECTION OF A LICENSED ARCHITECT TO ALTER THIS DOCUMENT IN ANYWAY. ALTERATIONS MUST HAVE THE SEAL AFFIXED ALONG WITH A DESCRIPTION OF THE ALTERATIONS, DATE AND ARCHITECT'S SIGNATURE. COPYRIGHT © 2012

PHASE
90% SUBMISSION

Revisions

Number	Description	Date:
1		
2		
3		
4		
5		

Project Title

HEMPSTEAD LAKE STATE PARK

CONTRACT
NYSP
WORK ORDER: LI-022
CONTRACT: D004472
COA: 1290350/30377/33001/ PRK 4559

PROJECT #: NYSP-1503

DATE: JULY 2017

DESIGNED BY:

DRAWN BY:

CHECKED BY: | REVIEWED BY:

SHEET TITLE

DETAILS

SHEET # **A6.0**

C:\Users\aconcepcion\appdata\local\temp\AcPublish_7208\A6.0 - Details.dwg Last Modified: Jul 18, 2017 - 8:21pm Plotted on: Jul 19, 2017 - 1:58pm By aconcepcion

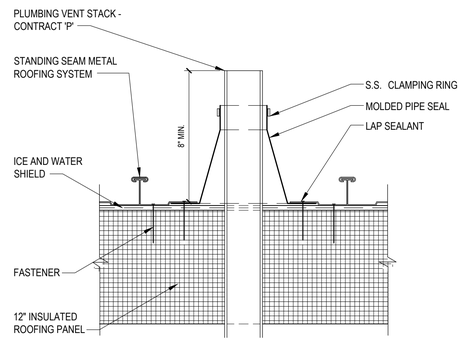

17 Plumbing Vent Flashing Detail
1 1/2" = 1'-0"

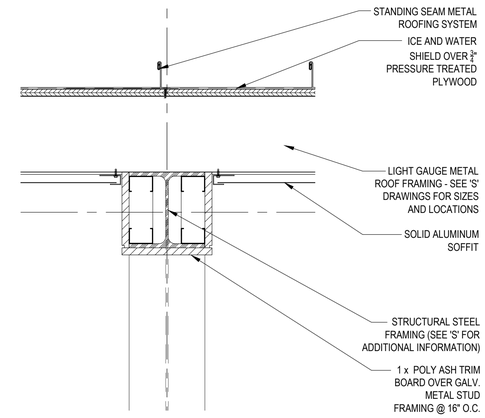

14 Exterior Beam Detail
1 1/2" = 1'-0"

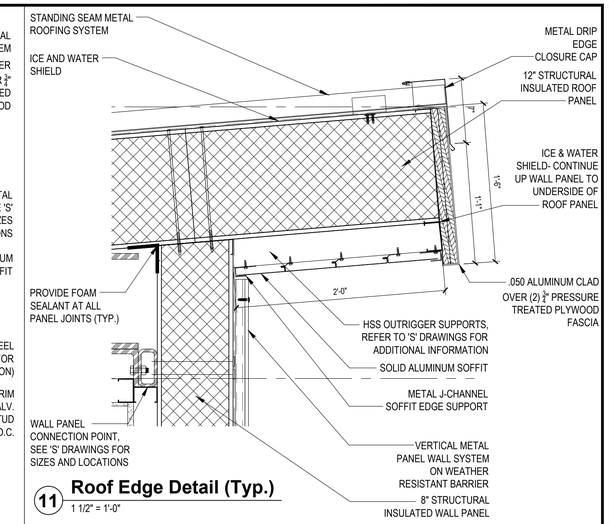

11 Roof Edge Detail (Typ.)
1 1/2" = 1'-0"

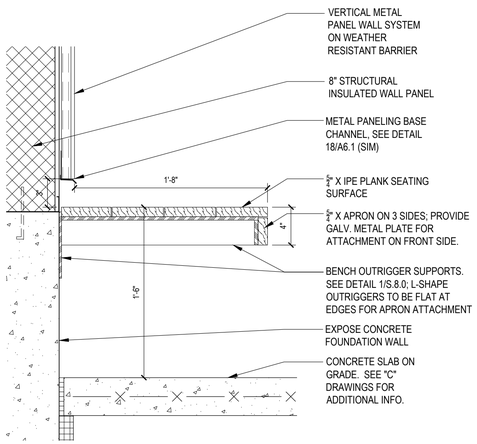

19 Cantivlered Bench Detail
3" = 1'-0"

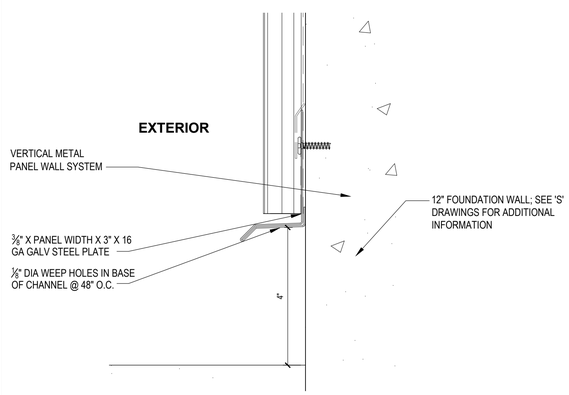

18 Metal Paneling Base Detail
6" = 1'-0"

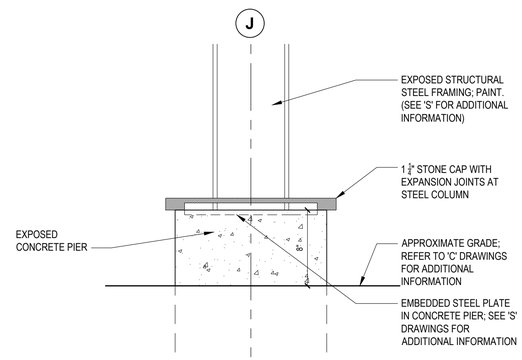

15 Exterior Base Detail
1 1/2" = 1'-0"

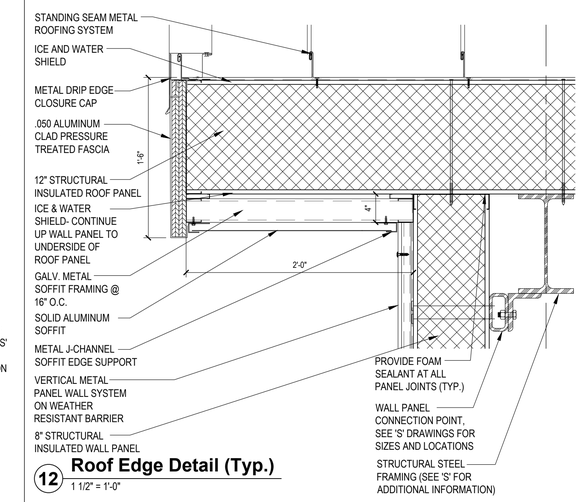

12 Roof Edge Detail (Typ.)
1 1/2" = 1'-0"

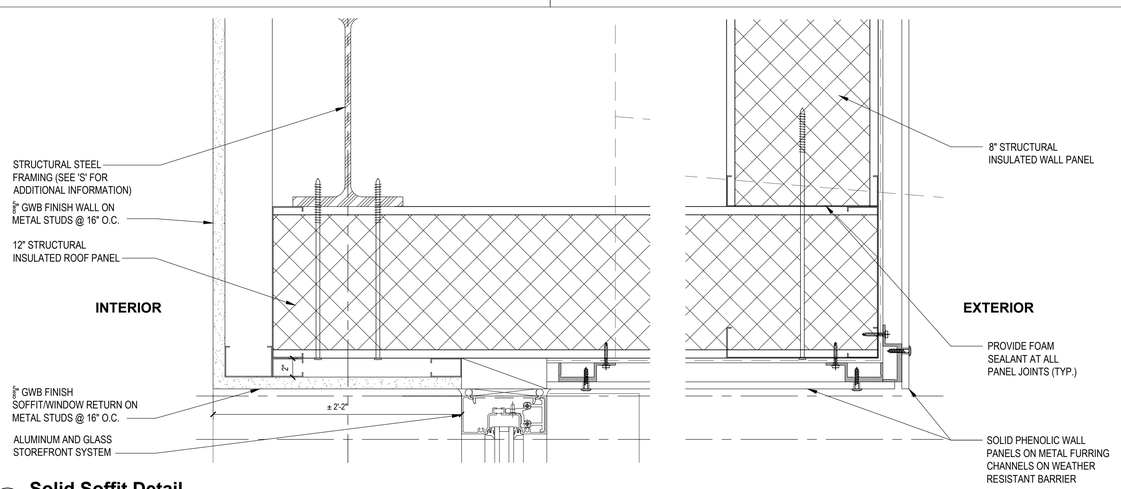

20 Solid Soffit Detail
3" = 1'-0"

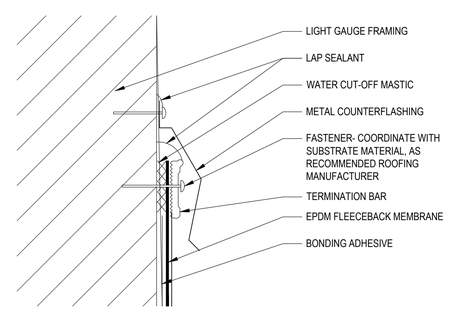

ALLOW 1/4" MIN. TO 1/2" MAX. SPACING BETWEEN CONSECUTIVE LENGTHS OF TERMINATION BAR.

NOTES:
1. WATER CUT-OFF MASTIC MUST BE HELD UNDER CONSTANT COMPRESSION.
2. DO NOT WRAP COMPRESSION TERMINATION AROUND CORNERS.

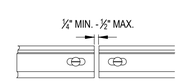

16 Typical Wall Flashing Detail
NOT TO SCALE

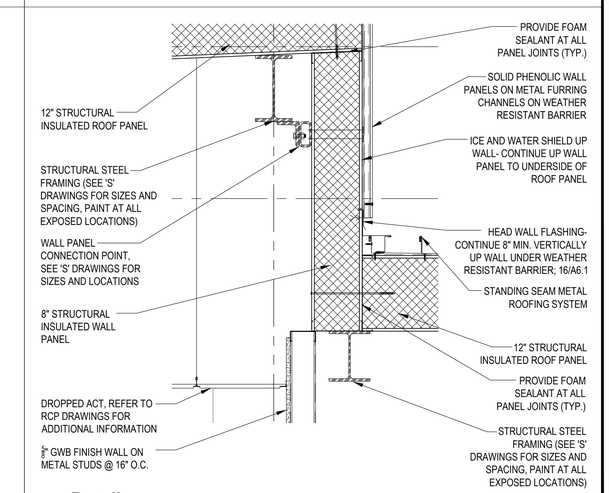

13 Detail
1" = 1'-0"

PROGRAM CONSULTANT:

Living with the BAY

CLIENTS:

NEW YORK STATE OF OPPORTUNITY. Parks, Recreation and Historic Preservation

Governor's Office of Storm Recovery

PROJECT MANAGER:

Stantec

LEAD LANDSCAPE ARCHITECTS + ARCHITECTS:

H2M architects + engineers
538 Broad Hollow Road
4th Floor East
Melville, NY 11747
P:(631)756-8000
F:(631)694-6122

CERTIFIED ARBORISTS + LANDSCAPE ARCHITECTS:

CHENEY DESIGN LA & PC LANDSCAPE ARCHITECTURE PC

STRUCTURAL ENGINEERS:

LKB CONSULTING ENGINEERS

CIVIL ENGINEERS + LANDSCAPE ARCHITECTS:

Cashin Associates, P.C.
ENGINEERING - PLANNING - CONSTRUCTION MANAGEMENT

LANDSCAPE ARCHITECTS:

MATRIXNEWORLD
Engineering Program
Matrix New World Engineering, Land Surveying
and Landscape Architecture, P.C.
442 State Route 35, Second Floor
Eatontown, New Jersey 07724
WBE / DBE / SBE
NEW JERSEY CERTIFICATE OF AUTHORIZATION No. 24GA27982000
Tel: 732-389-2999
Fax: 973-240-1818
www.matrixnewworld.com

SEAL

"ALTERATION OF THIS DOCUMENT EXCEPT BY A LICENSED PROFESSIONAL IS ILLEGAL"

THESE DOCUMENTS CONTAIN POTENTIALLY SENSITIVE INFORMATION AND SHALL BE USED FOR THEIR INTENDED PURPOSE. ONCE THE INTENDED PURPOSE HAS CEASED, THE DOCUMENTS SHALL BE DESTROYED IN A SECURE MANNER.

IT IS A VIOLATION OF STATE EDUCATION LAW FOR ANY PERSON, UNLESS UNDER THE DIRECTION OF A LICENSED ARCHITECT TO ALTER THIS DOCUMENT IN ANYWAY. ALTERATIONS MUST HAVE THE SEAL AFFIXED ALONG WITH A DESCRIPTION OF THE ALTERATIONS, DATE AND ARCHITECT'S SIGNATURE. COPYRIGHT © 2012

PHASE
90% SUBMISSION

Revisions

Number	Description	Date:
1		
2		
3		
4		
5		

Project Title

HEMPSTEAD LAKE STATE PARK

CONTRACT
NYSP
WORK ORDER: LI-022
CONTRACT: D004472
COA: 1290350/30377/33001/ PRK 4559

PROJECT #: NYSP-1503
DATE: JULY 2017
DESIGNED BY:
DRAWN BY:
CHECKED BY: REVIEWED BY:

SHEET TITLE
DETAILS

SHEET #
A6.1

C:\Users\oconcepcion\appdata\local\temp\AcPublish_12000\A6.1 - Details.dwg Last Modified: Jul 27, 2017 - 10:41pm Plotted on: Jul 27, 2017 - 10:42pm By aconcepcion

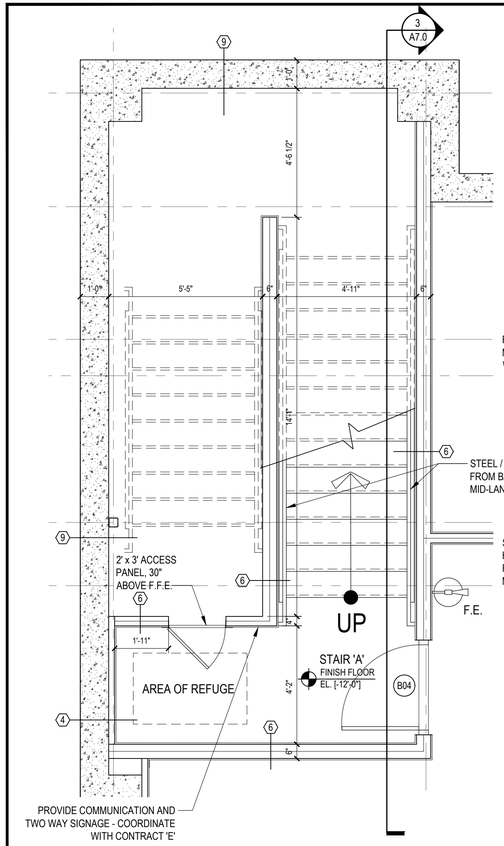

1 Enlarged Stair 'A' Plan at Basement
SCALE: 3/8"=1'-0"

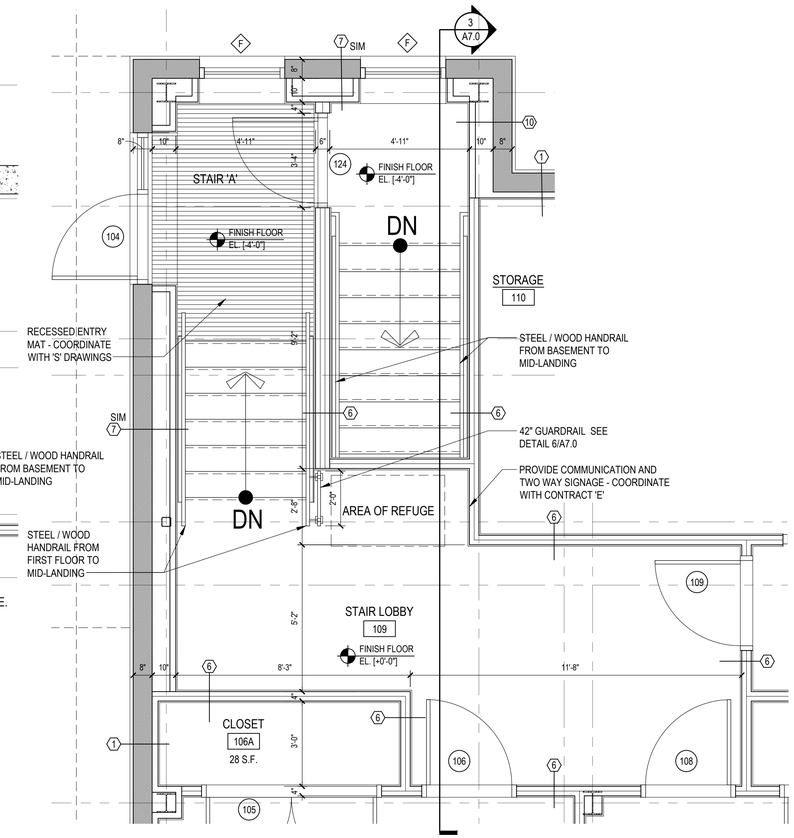

2 Enlarged Stair 'A' Plan at First Floor
SCALE: 3/8"=1'-0"

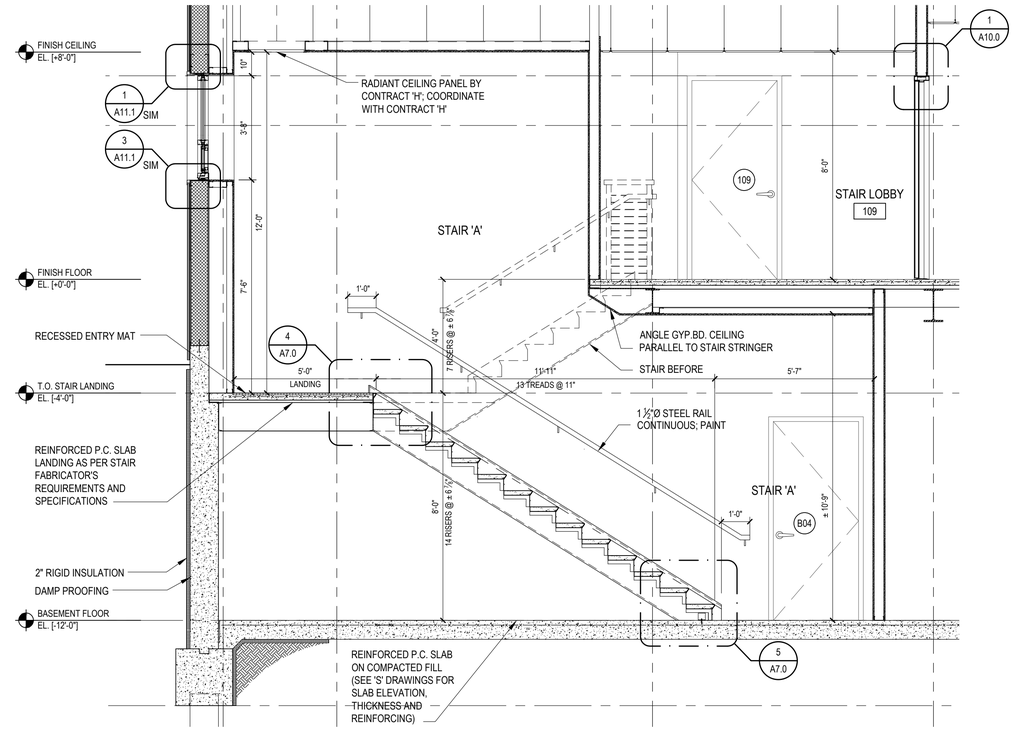

3 Stair 'A' Section
SCALE: 3/8"=1'-0"

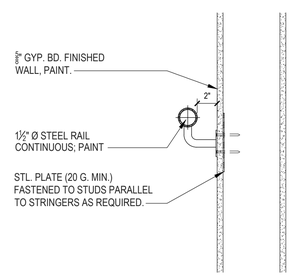

7 Typical Handrail Detail
SCALE: 1 1/2"= 1'-0"

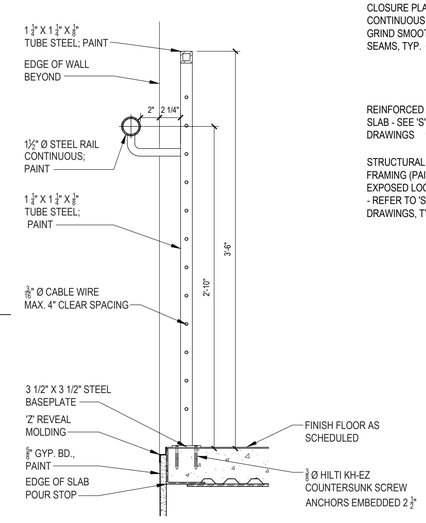

6 Stair Lobby Guard Detail
SCALE: 1 1/2"= 1'-0"

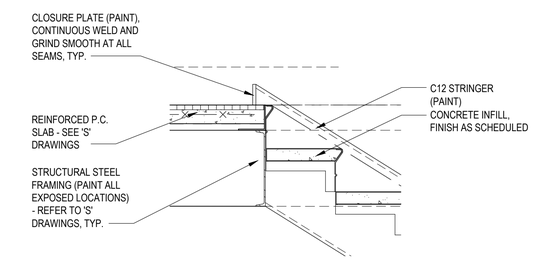

4 Typical Stair Detail
SCALE: 1"= 1'-0"

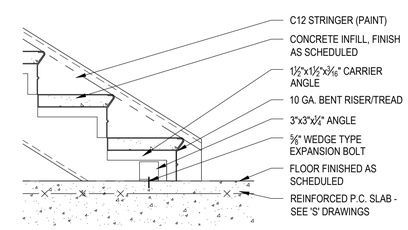

5 Typical Stair Detail
SCALE: 1"= 1'-0"

GENERAL STAIR NOTES

1. MAXIMUM RISER HEIGHT 7" (ACTUAL VARIES).
2. MINIMUM TREAD DEPTH 9 ½" EXCLUSIVE OF NOSING (ACTUAL VARIES).
3. PRODUCT OBTAINED BY MULTIPLYING HEIGHT OF RISER BY WIDTH OF TREAD SHALL NOT BE LESS THAN 70 OR GREATER THAN 77½.
4. HANDRAIL: ALLOWABLE HEIGHT TO BE BETWEEN 34" & 36". PROVIDE 12" HANDRAIL EXTENSIONS AT TOP AND BOTTOM OF STAIRS.
5. COORDINATE STAIR HEIGHTS TO ACCOMMODATE FINISHED FLOOR ELEVATIONS AND FINISHES AT EACH LEVEL.
6. ALL CONNECTIONS TO BE WELDED AND GROUND SMOOTH U.N.O.
7. PAINT ALL RAILING COMPONENTS & EXPOSED STEEL, TYP.

PROGRAM CONSULTANT:

Living with the BAY

CLIENTS:

NEW YORK STATE OF OPPORTUNITY Parks, Recreation and Historic Preservation

Governor's Office of Storm Recovery

PROJECT MANAGER:

Stantec

LEAD LANDSCAPE ARCHITECTS + ARCHITECTS:

H2M architects + engineers
538 Broad Hollow Road
4th Floor East
Melville, NY 11747
P:(631)756-8000
F:(631)694-4122

CERTIFIED ARBORISTS + LANDSCAPE ARCHITECTS:

CHENEY DESIGN LA & PC LANDSCAPE ARCHITECTURE PC

STRUCTURAL ENGINEERS:

LKB CONSULTING ENGINEERS

CIVIL ENGINEERS + LANDSCAPE ARCHITECTS:

Cashin Associates, P.C. ENGINEERING - PLANNING - CONSTRUCTION MANAGEMENT

LANDSCAPE ARCHITECTS:

MATRIXNEWORLD Engineering Program

Matrix New World Engineering, Land Surveying
and Landscape Architecture, P.C.
442 State Route 35, Second Floor
Eatontown, New Jersey 07724
WBE / DBE / SBE
NEW JERSEY CERTIFICATE OF AUTHORIZATION No. 24GA27962000

Tel: 732-389-2999
Fax: 973-240-1818
www.matrixneworld.com

SEAL

"ALTERATION OF THIS DOCUMENT EXCEPT BY A LICENSED PROFESSIONAL IS ILLEGAL"

THESE DOCUMENTS CONTAIN POTENTIALLY SENSITIVE INFORMATION AND SHALL BE USED FOR THEIR INTENDED PURPOSE. ONCE THE INTENDED PURPOSE HAS CEASED, THE DOCUMENTS SHALL BE DESTROYED IN A SECURE MANNER.

IT IS A VIOLATION OF STATE EDUCATION LAW FOR ANY PERSON, UNLESS UNDER THE DIRECTION OF A LICENSED ARCHITECT TO ALTER THIS DOCUMENT IN ANYWAY. ALTERATIONS MUST HAVE THE SEAL AFFIXED ALONG WITH A DESCRIPTION OF THE ALTERATIONS, DATE AND ARCHITECT'S SIGNATURE. COPYRIGHT © 2012

PHASE
90% SUBMISSION

Revisions

Number	Description	Date:
1		
2		
3		
4		
5		

Project Title

HEMPSTEAD LAKE STATE PARK

CONTRACT
NYSP
WORK ORDER: LI-022
CONTRACT: D004472
COA: 1290350/30377/33001/ PRK 4559

PROJECT # NYSP-1503

DATE: JULY 2017

DESIGNED BY:

DRAWN BY:

CHECKED BY: REVIEWED BY:

SHEET TITLE

ENLARGED STAIR PLANS, SECTION AND DETAILS

SHEET # **A7.0**

M:\cadd\NYSP\1503\Con-docs\arch\A7.0 - Stairs.dwg Last Modified: Jul 24, 2017 - 3:59pm Plotted on: Jul 24, 2017 - 4:01pm By: aconcepcion

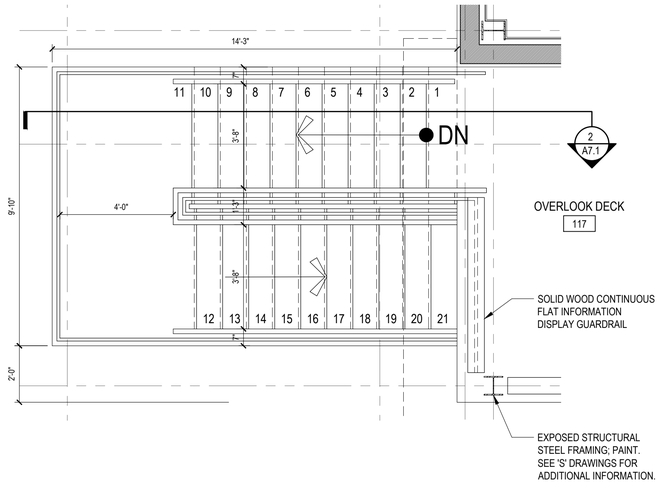

1 Enlarged Stair 'B' Plan at First Floor

SCALE: 3/8"=1'-0"

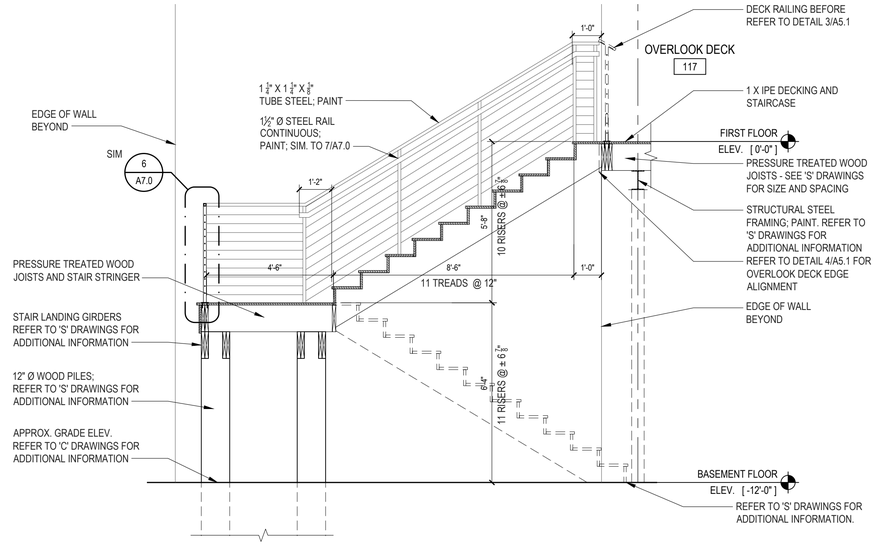

2 Stair 'B' Section

SCALE: 3/8"=1'-0"

GENERAL STAIR NOTES

1. MAXIMUM RISER HEIGHT 7" (ACTUAL VARIES).
2. MINIMUM TREAD DEPTH 9 ½" EXCLUSIVE OF NOSING (ACTUAL VARIES).
3. PRODUCT OBTAINED BY MULTIPLYING HEIGHT OF RISER BY WIDTH OF TREAD SHALL NOT BE LESS THAN 70 OR GREATER THAN 77½.
4. HANDRAIL: ALLOWABLE HEIGHT TO BE BETWEEN 34" & 36". PROVIDE 12" HANDRAIL EXTENSIONS AT TOP AND BOTTOM OF STAIRS.
5. COORDINATE STAIR HEIGHTS TO ACCOMMODATE FINISHED FLOOR ELEVATIONS AND FINISHES AT EACH LEVEL.
6. ALL CONNECTIONS TO BE WELDED AND GROUND SMOOTH U.N.O.
7. PAINT ALL RAILING COMPONENTS & EXPOSED STEEL, TYP.

PROGRAM CONSULTANT:

Living with the BAY

CLIENTS:

NEW YORK STATE OF OPPORTUNITY Parks, Recreation and Historic Preservation

Governor's Office of Storm Recovery

PROJECT MANAGER:

Stantec

LEAD LANDSCAPE ARCHITECTS + ARCHITECTS:

H2M architects + engineers
538 Broad Hollow Road
4th Floor East
Melville, NY 11747
P:(631)756-8000
F:(631)694-4122

CERTIFIED ARBORISTS + LANDSCAPE ARCHITECTS:

CHENEY DESIGN LA & PC LANDSCAPE ARCHITECTURE PC

STRUCTURAL ENGINEERS:

LKB CONSULTING ENGINEERS

CIVIL ENGINEERS + LANDSCAPE ARCHITECTS:

Cashin Associates, P.C.
ENGINEERING - PLANNING - CONSTRUCTION MANAGEMENT

LANDSCAPE ARCHITECTS:

MATRIXNEWORLD
Engineering Program
Matrix New World Engineering, Land Surveying
Landscape Architecture, D.P.C.
442 State Route 35, Second Floor
Eatontown, New Jersey 07724
WBE / DBE / SBE
Tel: 732-389-2999
Fax: 973-240-1818
www.matrixnewworld.com
NEW JERSEY CERTIFICATE OF AUTHORIZATION No. 24GA27982000

SEAL

"ALTERATION OF THIS DOCUMENT EXCEPT BY A LICENSED PROFESSIONAL IS ILLEGAL"

THESE DOCUMENTS CONTAIN POTENTIALLY SENSITIVE INFORMATION AND SHALL BE USED FOR THEIR INTENDED PURPOSE. ONCE THE INTENDED PURPOSE HAS CEASED, THE DOCUMENTS SHALL BE DESTROYED IN A SECURE MANNER.

IT IS A VIOLATION OF STATE EDUCATION LAW FOR ANY PERSON, UNLESS UNDER THE DIRECTION OF A LICENSED ARCHITECT TO ALTER THIS DOCUMENT IN ANYWAY. ALTERATIONS MUST HAVE THE SEAL AFFIXED ALONG WITH A DESCRIPTION OF THE ALTERATIONS, DATE AND ARCHITECT'S SIGNATURE. COPYRIGHT © 2012

PHASE
90% SUBMISSION

Revisions

Number	Description	Date:
1		
2		
3		
4		
5		

Project Title

HEMPSTEAD LAKE STATE PARK

CONTRACT
NYSP
WORK ORDER: LI-022
CONTRACT: D004472
COA: 1290350/30377/33001/ PRK 4559

PROJECT #: NYSP-1503
DATE: JULY 2017
DESIGNED BY:
DRAWN BY:
CHECKED BY:
REVIEWED BY:

SHEET TITLE

EXTERIOR STAIR PLAN, SECTION AND TYP. NOTES

SHEET # **A7.1**

C:\Users\aconcepcion\appdata\local\temp\AcPublish_12\000\A7.1 - Exterior Stair.dwg Last Modified: Jul 27, 2017 - 10:34pm Plotted on: Jul 27, 2017 - 10:35pm By aconcepcion

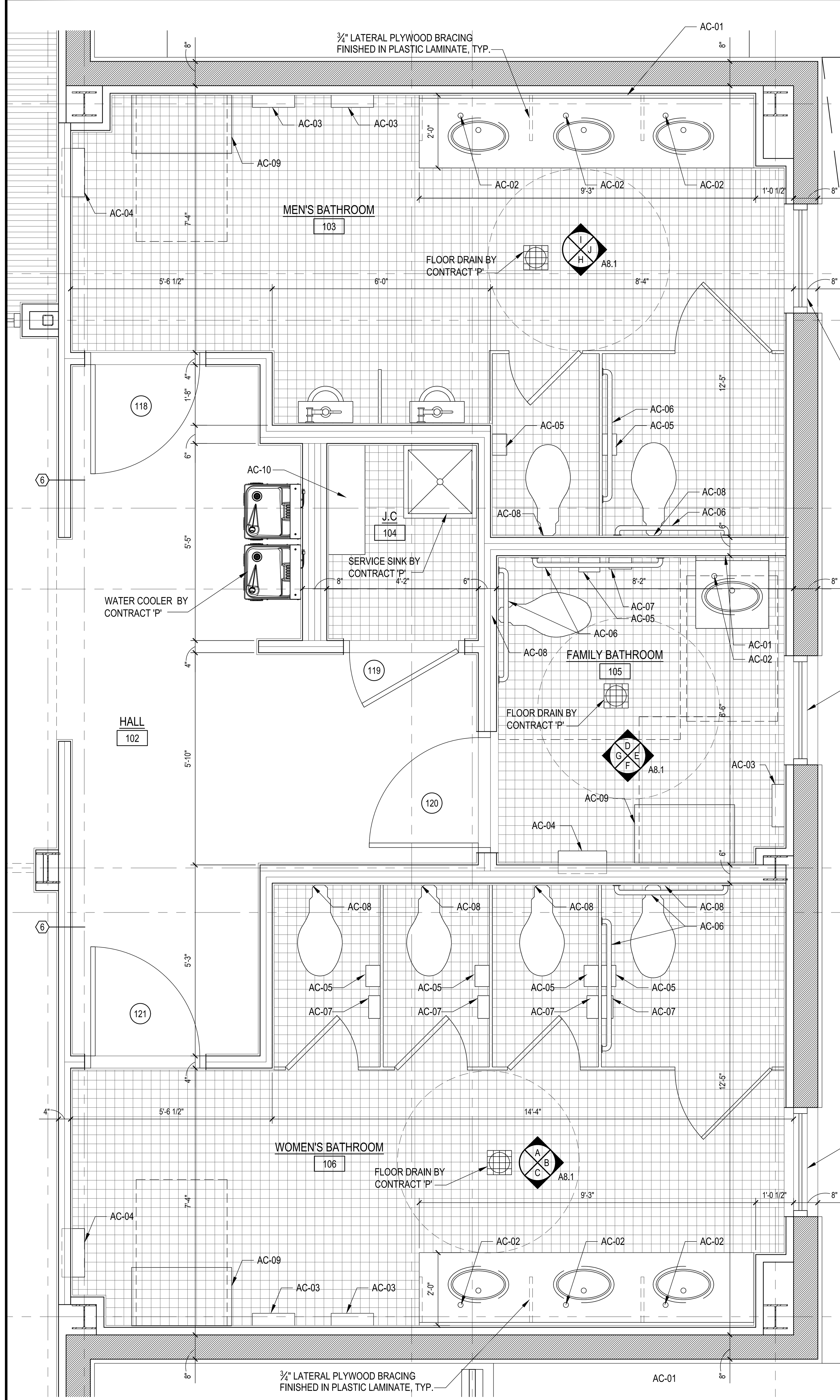

① **Enlarged Bathroom Floor Plan**
SCALE: 1/2"=1'-0"

BATHROOM ACCESSORY SCHEDULE

MARK	ROOM NUMBER	MODEL #	TYPE	REMARKS
AC-01	ALL BATHROOMS	BOBRICK-B-2908	MIRROR WITH STAINLESS STEEL FRAME	PROVIDE ONE (1) UNIT PER BATHROOM, 36" H.WIDTH SHALL MATCH COUNTERTOP/ VANITY WIDTH CENTER UNIT ON LAVATORY. BOTTOM OF UNIT ELEVATION TO BE COORDINATED WITH LAVATORY VANITY, & BACKSPLASH
AC-02	ALL BATHROOMS	BOBRICK-B-8226	COUNTER MOUNTED SOAP DISPENSER	PROVIDE ONE (1) UNIT PER LAVATORY.
AC-03	ALL BATHROOMS	AB12-301827-01	SURFACE MOUNTED AUTOMATIC HAND DRYER	PROVIDE (2) UNITS IN ROOMS 103 &106 AND (1) IN FAMILY BATHROOM 105 .
AC-04	ALL BATHROOMS	BOBRICK-B-43644	RECESSED WASTE RECEPTACLE	PROVIDE ONE (1) UNIT PER BATHROOM.
AC-05	ALL BATHROOMS	BOBRICK-B-2892	SURFACE MOUNTED JUMBO - ROLL TOILET TISSUE DISPENSER	PROVIDE ONE (1) UNIT PER WATER CLOSET.
AC-06	ALL BATHROOMS	BOBRICK-B-5806	1½" STAINLESS STEEL GRAB BARS WITH SNAP FLANGE	PROVIDE ONE (1) UNIT OF EACH OF THE FOLLOWING LENGTHS PER BATHROOM: 18", 36", 42" PER H.C. STALL; SEE PLAN AND H.C. DETAILS FOR ADDITIONAL INFORMATION.
AC-07	ROOMS 105 &106	BOBRICK-B-270	SURFACED MOUNTED SANITARY NAPKIN DISPOSAL	PROVIDE ONE (1) UNIT IN EACH LOCATION
AC-08	ALL BATHROOMS	BOBRICK-B-4221	SURFACE MOUNTED TOILET SEAT COVER DISPENSER	PROVIDE ONE (1) UNIT PER WATER CLOSET.
AC-09	ALL BATHROOMS	KB200-05	WALL MOUNTED BABY CHANGING STATION	PROVIDE ONE (1) UNIT PER BATHROOM.
AC-10	ALL JANITOR'S CLOSETS	BOBRICK-B-239	SURFACE MOUNTED UTILITY SHELF	PROVIDE ONE (1) UNIT PER JANITOR'S CLOSET.

GENERAL BATHROOM NOTES:

1. ALL PAINTING SHALL BE PERFORMED IN ACCORDANCE WITH THE REQUIREMENTS CONTAINED IN SECTION 099000 OF THE SPECIFICATIONS.
2. THIS DRAWING SERVES AS A GENERAL LIST OF FINISH ITEMS AND IS NOT A LIST OF ALL FINISH ITEMS WITHIN A ROOM OR SPACE. REFER TO ALL CONTRACT DOCUMENTS DRAWINGS AND SPECIFICATIONS TO DETERMINE ALL REQUIRED FINISHES AND FINISH ITEMS.
3. MAINTAIN SAME FINISHES ALL WALLS WITHIN BATHROOMS.
4. MOUNTING LOCATIONS OF ALL FIXTURES AND ACCESSORIES TO BE REVIEWED AND APPROVED IN FIELD BY OWNER'S CONSTRUCTION REPRESENTATIVE.
5. COORDINATE LOCATION OF PLUMBING FIXTURES WITH CONTRACT 'P'
6. PROVIDE ⅝" CEMENT BOARD ON ALL WALLS TO RECEIVE TILE FINISH.
7. PROVIDE ALL BLOCKING AND REINFORCING IN WALLS AND CEILINGS AS REQUIRED FOR SECURE MOUNTING OF ALL FIXTURES, TOILET PARTITIONS AND ACCESSORIES.

ACCESSORIES

REQUIREMENTS FOR ACCESSIBLE AND USABLE HANDICAP REST ROOMS AS PER ICC/ANSI A117.1-2003

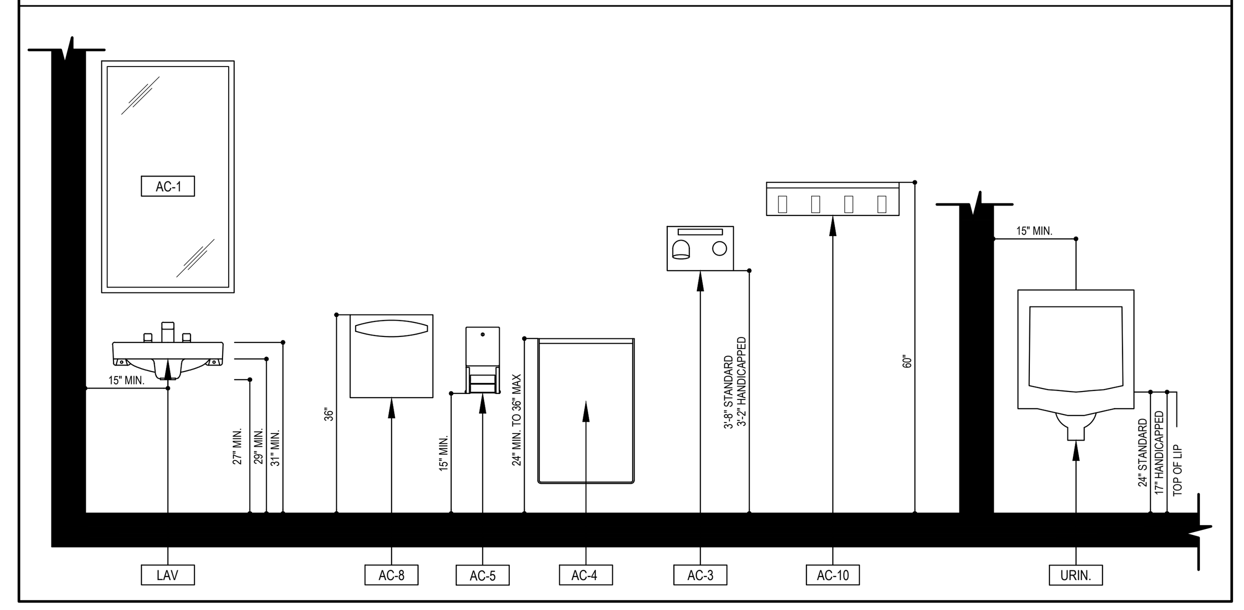

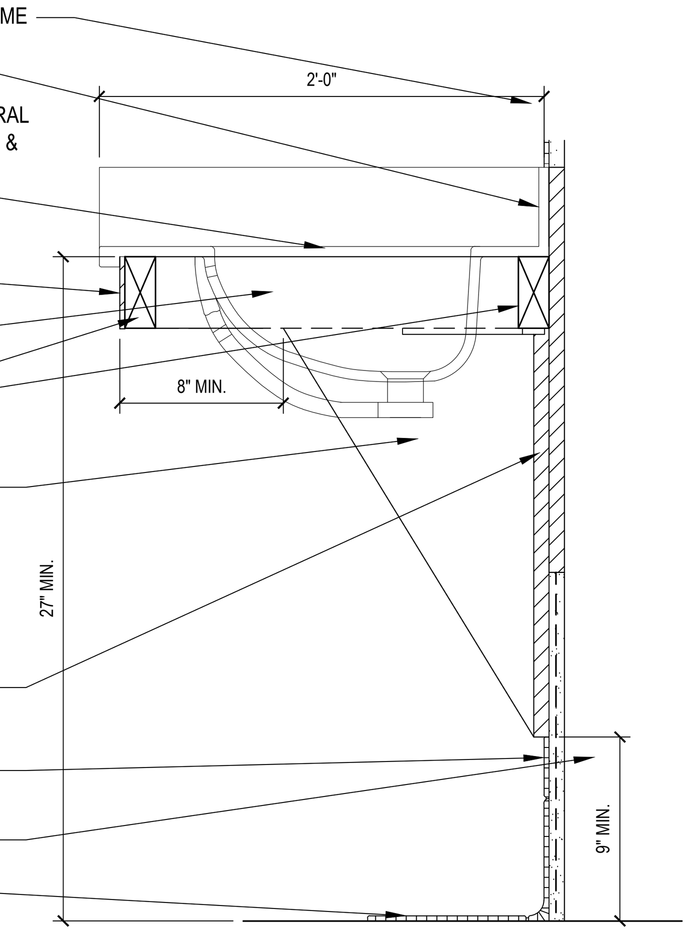

② **Typical Bathroom Vanity Detail**
SCALE: 1 1/2"=1'-0"

REQUIREMENTS FOR ACCESSIBLE AND USABLE HANDICAP REST ROOMS AS PER ICC/ANSI A117.1-2003

603 TOILET AND BATHING ROOMS

603.1 GENERAL. Accessible toilet and bathing rooms shall comply with section 603.

603.2 CLEARANCES.

603.2.1 WHEELCHAIR TURNING SPACE. A wheelchair turning space complying with section 304 shall be provided within the room.

603.2.2 OVERLAP. Clear floor or ground spaces, clearances at fixtures, and wheelchair turning spaces shall be permitted to overlap.

603.2.3 DOORS. Doors shall not swing into the clear floor or ground space or clearance for any fixture. EXCEPTION: Where the room is for individual use and clear floor or ground space complying with section 305.3 is provided within the room, beyond the arc of the door swing.

603.3 MIRRORS. Mirrors shall be mounted with the bottom edge of the reflecting surface 40 inches (1015 mm) maximum above the floor or ground.

603.4 COAT HOOKS AND SHELVES. Coat hooks provided within toilet rooms shall accommodate a forward reach or side reach complying with section 308. Where provided, a fold-down shelf shall be 40 inches (1015 mm) minimum and 48 inches (1220 mm) maximum above the floor or ground.

604 WATER CLOSETS AND TOILET COMPARTMENTS.

604.1 GENERAL. Accessible water closets and toilet compartments shall comply with section 604.

604.2 LOCATION. The water closet shall be positioned with a wall or partition to the rear and to one side. The centerline of the water closet shall be 16 inches (405 mm) minimum to 18 inches (455 mm) maximum from the side wall or partition, except that the water closet shall be centered in the ambulatory accessible compartment specified in section 604.8.2.

604.3 CLEARANCE.

604.3.1 SIZE. Clearance around the water closet shall be 60 inches (1220 mm) minimum, measured perpendicular from the side wall, and 56 inches (1420 mm) minimum, measured perpendicular from the rear wall. No other fixtures or obstructions shall be within the water closet clearance.

604.3.2 OVERLAP. The clearance around the water closet shall be permitted to overlap the fixture, associated grab bars, tissue dispensers, accessible routes, and clear floor or ground space, or clearances and the wheelchair turning space.

604.4 HEIGHT. The top of water closet seats shall be 17 inches (430 mm) minimum and 19 inches (485 mm) maximum above the floor or ground. Seats shall not return automatically to a lifted position.

604.5 GRAB BARS. Grab bars for water closets shall comply with section 609. Grab bars shall be provided on the rear wall and the side wall closest to the water closet.

604.5.1 SIDE WALL. Side wall grab bar shall be 42 inches (1065 mm) long minimum, 12 inches (305 mm) maximum from the rear wall and extending 54 inches (1370 mm) minimum from the rear wall.

604.5.2 REAR WALL. The rear wall grab bar shall be 24 inches (610 mm) long minimum, centered on the water closet. Where space permits, the bar shall be 36 inches (915 mm) long minimum, with the additional length provided on the transfer side of the water closet.

604.6 FLUSH CONTROLS. Flush controls shall be hand-operated or automatic. Hand-operated flush controls shall comply with section 309.

604.7 DISPENSERS. Toilet paper dispensers shall comply with section 309.4 and shall be 7 inches (180 mm) minimum and 9 inches (230 mm) maximum in front of the water closet. The outlet of the dispenser shall be 15 inches (380 mm) minimum and 48 inches (1220 mm) maximum above the floor or ground. There shall be a clearance of 1½ inches (38 mm) minimum below and 12 inches (305 mm) minimum above the grab bar. Dispensers shall not be of a type that control delivery, or that do not allow continuous paper flow.

606 LAVATORIES AND SINKS

606.1 GENERAL. Accessible lavatories and sinks shall comply with section 606.

606.2 CLEAR FLOOR OF GROUND SPACE. A clear floor or ground space complying with section 305.3 positioned for a forward approach, shall be provided. Knee and toe clearance complying with section 306 shall be provided. EXCEPTION. The dip of the overflow shall not be considered in determining knee and toe clearances.

606.3 HEIGHT AND CLEARANCES. The front of lavatories and sinks shall be 34 inches (865 mm) maximum above the floor or ground, measured to the higher of the fixture rim or counter surface.

606.4 FAUCETS. Faucets shall comply with section 309. hand-operated, self-closing faucets shall remain open for 10 seconds minimum.

606.5 BOWL DEPTH. Sinks shall be 6½ inches (165 mm) deep maximum. Multiple compartment sinks shall have at least one compartment complying with this requirement.

606.6 EXPOSED PIPES AND SURFACES. Water supply and drain pipes under lavatories and sinks shall be insulated or otherwise configured to protect against contact. There shall be no sharp or abrasive surfaces under lavatories or sinks.

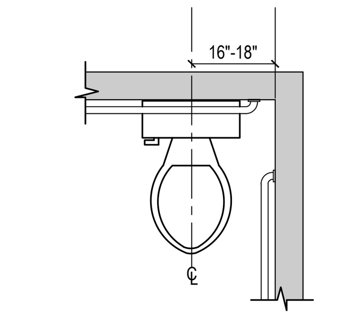

Fig. 604.2
Water Closet Location

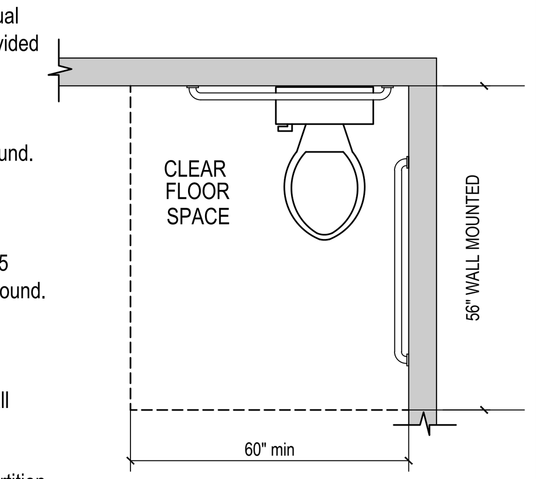

Fig. 604.3.1
Size of Clearance for Water Closet

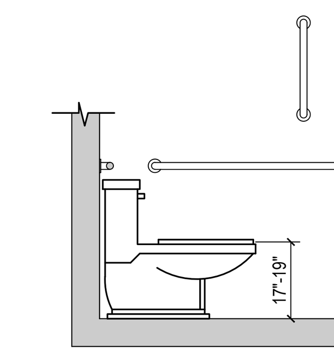

Fig. 604.4
Height of Water Closet

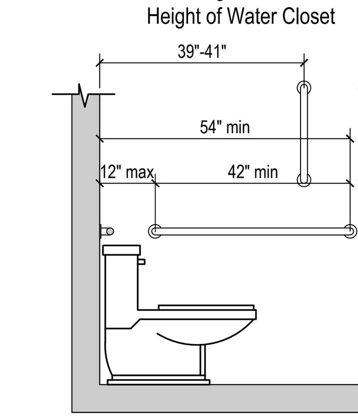

Fig. 604.5.1
Side Wall Grab Bar for Water Closet

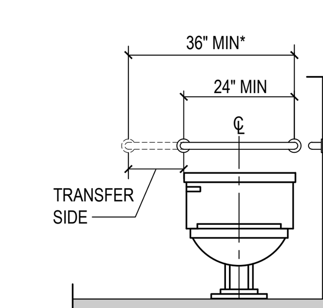

Fig. 604.5.2
Rear Wall Grab Bar for Water Closet

* 36 inches (915 mm minimum when wall space permits)

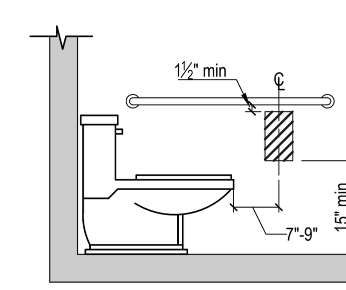

Fig. 604.7
Dispenser Location
(Below Grab Bar)

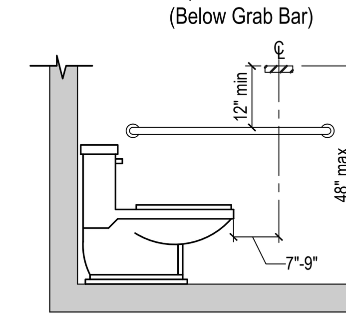

Fig. 604.7
Dispenser Location
(Above Grab Bar)

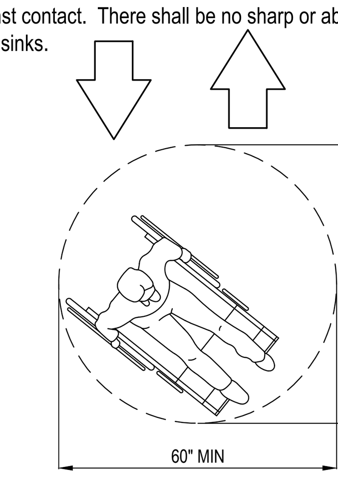

Fig. 304.4
Size of Wheelchair Turning Space

PROGRAM CONSULTANT:
CLIENTS:
NEW YORK STATE OF OPPORTUNITY. Parks, Recreation and Historic Preservation
Governor's Office of Storm Recovery
PROJECT MANAGER:
Stantec
LEAD LANDSCAPE ARCHITECTS + ARCHITECTS:
H2M architects + engineers
538 Broad Hollow Road
4th Floor East
Melville, NY 11747
P:(631)756-8000
F:(631)694-4122
CERTIFIED ARBORISTS + LANDSCAPE ARCHITECTS:
GIBNEY DESIGN LA PC
STRUCTURAL ENGINEERS:
LKB CONSULTING ENGINEERS
CIVIL ENGINEERS + LANDSCAPE ARCHITECTS:
Cashin Associates, P.C.
ENGINEERING · PLANNING · CONSTRUCTION MANAGEMENT
LANDSCAPE ARCHITECTS:
MATRIXNEWORLD Engineering Progress
Matrix New World Engineering, Land Surveying and Landscape Architecture, P.C.
442 State Route 35, Second Floor, Eatontown, New Jersey 07724
Tel: 732-588-2999 Fax: 973-240-1818
WBE / DBE / SBE www.matrixneworld.com
NEW JERSEY CERTIFICATE OF AUTHORIZATION No. 24GA27962300
SEAL

"ALTERATION OF THIS DOCUMENT EXCEPT BY A LICENSED PROFESSIONAL IS ILLEGAL"

THESE DOCUMENTS CONTAIN POTENTIALLY SENSITIVE INFORMATION AND SHALL BE USED FOR THEIR INTENDED PURPOSE. ONCE THE INTENDED PURPOSE HAS CEASED, THE DOCUMENTS SHALL BE DESTROYED IN A SECURE MANNER.

IT IS A VIOLATION OF STATE EDUCATION LAW FOR ANY PERSON, UNLESS UNDER THE DIRECTION OF A LICENSED ARCHITECT TO ALTER THIS DOCUMENT IN ANYWAY. ALTERATIONS MUST HAVE THE SEAL AFFIXED ALONG WITH A DESCRIPTION OF THE ALTERATIONS, DATE AND ARCHITECT'S SIGNATURE. COPYRIGHT © 2012

PHASE
90% SUBMISSION

Revisions

Number	Description	Date:
1		
2		
3		
4		
5		

Project Title

HEMPSTEAD LAKE STATE PARK

CONTRACT
NYSP
WORK ORDER: LI-022
CONTRACT: D004472
COA: 1290350/30377/33001/ PRK 4559

PROJECT #: NYSP-1503
DATE: JULY 2017
DESIGNED BY: ACP
DRAWN BY: TJS
CHECKED BY:
REVIEWED BY:

SHEET TITLE: **ENLARGED BATHROOM PLANS, AND DETAILS**

SHEET # **A8.0**

C:\Users\aconcepcion\appdata\local\temp\AcPublish_6280\A8.0 - Bathroom.dwg Last Modified: Jul 12, 2017 - 10:35am Plotted on: Jul 18, 2017 - 7:58pm By aconcepcion

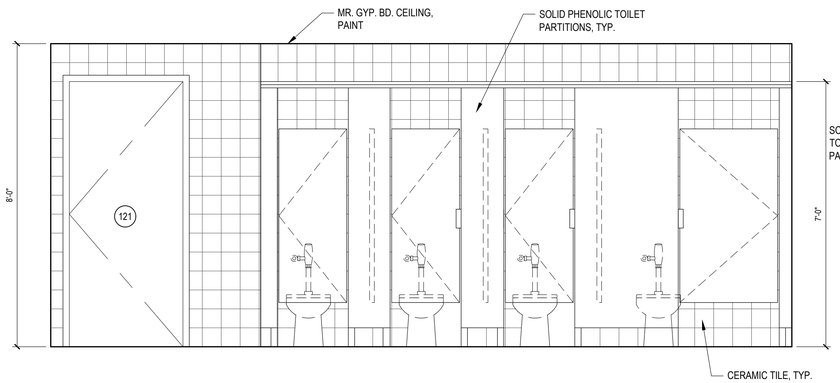

A Bathroom Elevation (Room 106)
SCALE: 1/2"= 1'-0"

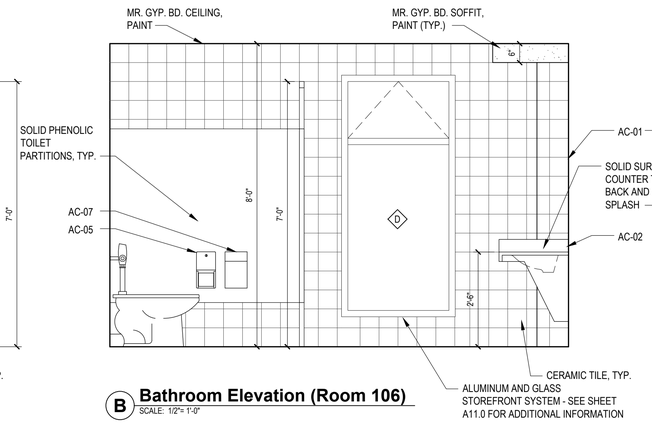

B Bathroom Elevation (Room 106)
SCALE: 1/2"= 1'-0"

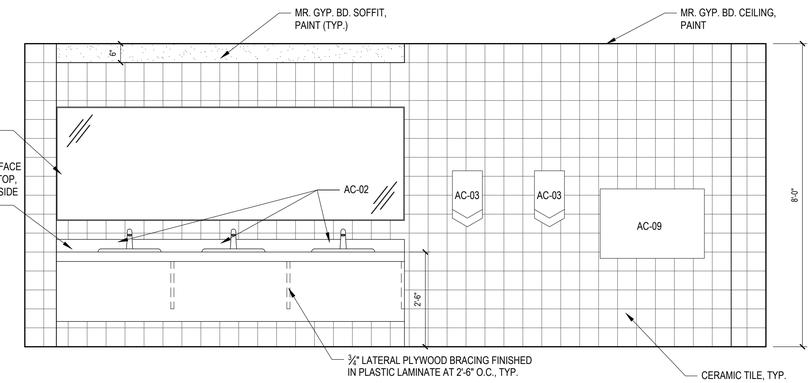

C Bathroom Elevation (Room 106)
SCALE: 1/2"= 1'-0"

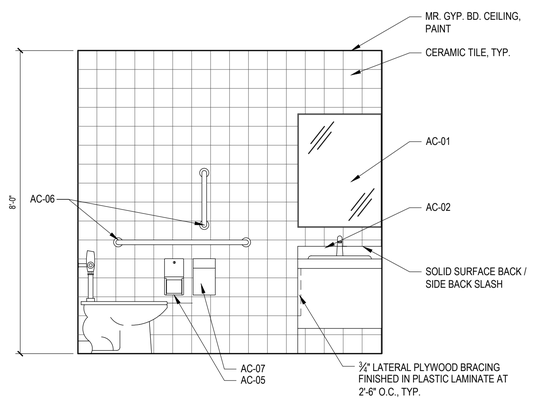

D Bathroom Elevation (Room 105)
SCALE: 1/2"= 1'-0"

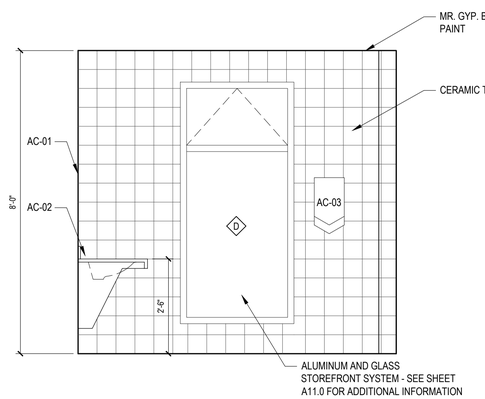

E Bathroom Elevation (Room 105)
SCALE: 1/2"= 1'-0"

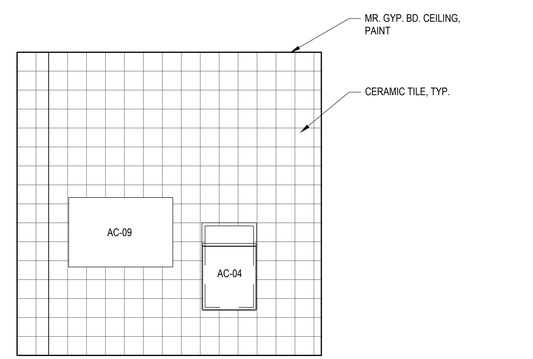

F Bathroom Elevation (Room 105)
SCALE: 1/2"= 1'-0"

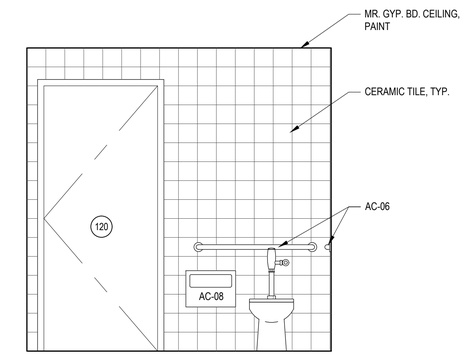

G Bathroom Elevation (Room 105)
SCALE: 1/2"= 1'-0"

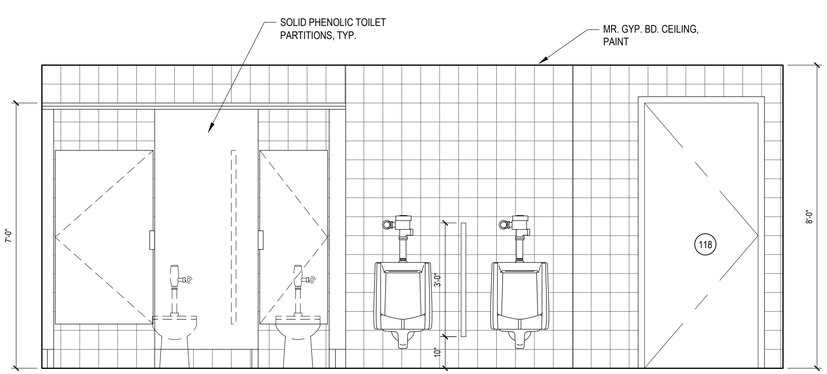

H Bathroom Elevation (Room 103)
SCALE: 1/2"= 1'-0"

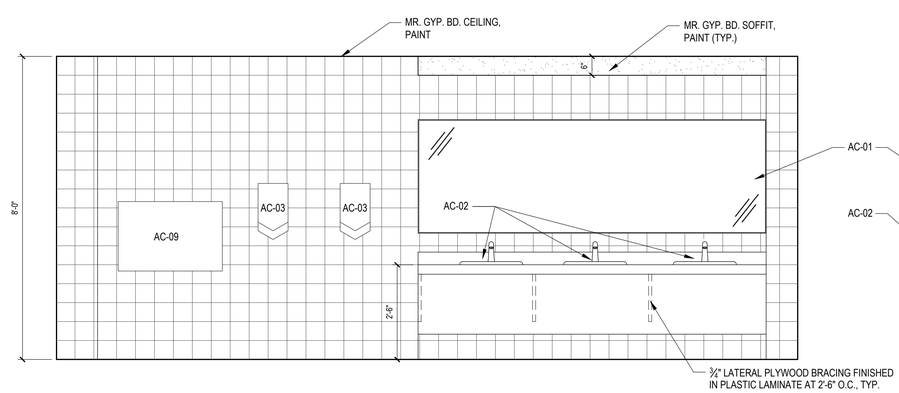

I Bathroom Elevation (Room 103)
SCALE: 1/2"= 1'-0"

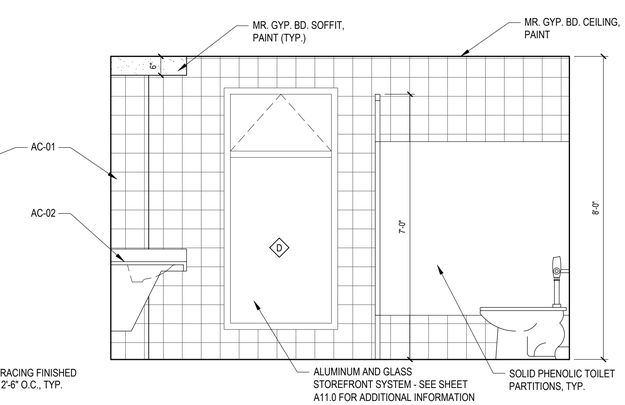

J Bathroom Elevation (Room 103)
SCALE: 1/2"= 1'-0"

PROGRAM CONSULTANT:

Living with the BAY

CLIENTS:

NEW YORK STATE OF OPPORTUNITY. Parks, Recreation and Historic Preservation

Governor's Office of Storm Recovery

PROJECT MANAGER:

Stantec

LEAD LANDSCAPE ARCHITECTS + ARCHITECTS:

H2M architects + engineers
538 Broad Hollow Road
4th Floor East
Melville, NY 11747
P:(631)756-8000
F:(631)694-4122

CERTIFIED ARBORISTS + LANDSCAPE ARCHITECTS:

CHENEY DESIGN LA & PC LANDSCAPE ARCHITECTURE PC

STRUCTURAL ENGINEERS:

LKB CONSULTING ENGINEERS

CIVIL ENGINEERS + LANDSCAPE ARCHITECTS:

Cashin Associates, P.C.
ENGINEERING - PLANNING - CONSTRUCTION MANAGEMENT

LANDSCAPE ARCHITECTS:

MATRIXNEWORLD
Engineering Program
Matrix New World Engineering, Land Surveying
Architecture and Landscape P.C.
442 State Route 35, Second Floor
Eatontown, New Jersey 07724
WBE / DBE / SBE
NEW JERSEY CERTIFICATE OF AUTHORIZATION No. 24GA27962000
Tel: 732-389-2999
Fax: 973-240-1818
www.matrixnewworld.com

SEAL

"ALTERATION OF THIS DOCUMENT EXCEPT BY A LICENSED PROFESSIONAL IS ILLEGAL"

THESE DOCUMENTS CONTAIN POTENTIALLY SENSITIVE INFORMATION AND SHALL BE USED FOR THEIR INTENDED PURPOSE. ONCE THE INTENDED PURPOSE HAS CEASED, THE DOCUMENTS SHALL BE DESTROYED IN A SECURE MANNER.

IT IS A VIOLATION OF STATE EDUCATION LAW FOR ANY PERSON, UNLESS UNDER THE DIRECTION OF A LICENSED ARCHITECT TO ALTER THIS DOCUMENT IN ANYWAY. ALTERATIONS MUST HAVE THE SEAL AFFIXED ALONG WITH A DESCRIPTION OF THE ALTERATIONS, DATE AND ARCHITECT'S SIGNATURE. COPYRIGHT © 2012

PHASE
90% SUBMISSION

Revisions

Number	Description	Date:
1		
2		
3		
4		
5		

Project Title

HEMPSTEAD LAKE STATE PARK

CONTRACT
NYSP
WORK ORDER: LI-022
CONTRACT: D004472
COA: 1290350/30377/33001/ PRK 4559

PROJECT #: NYSP-1503
DATE: JULY 2017
DESIGNED BY: ACP
DRAWN BY: TJS
CHECKED BY:
REVIEWED BY:

SHEET TITLE
BATHROOM ELEVATIONS

SHEET #
A8.1

C:\Users\aconcepcion\appdata\local\temp\AcPublish_6268\A8.1 - Bathroom elevations.dwg Last Modified: Jul 25, 2017 - 1:43pm Printed on: Jul 25, 2017 - 1:44pm By aconcepcion

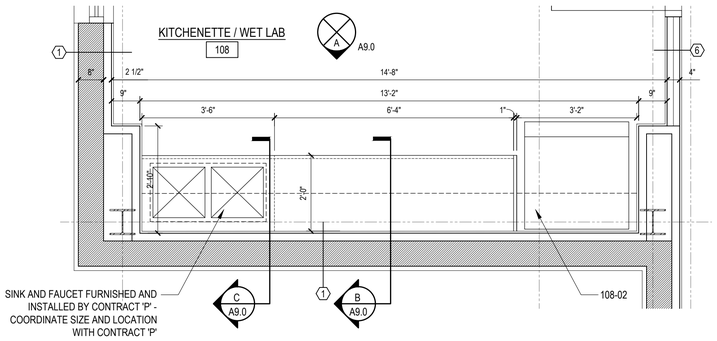

1 Enlarged Kitchenette/Wet Lab Floor Plan

SCALE: 1/2"=1'-0"

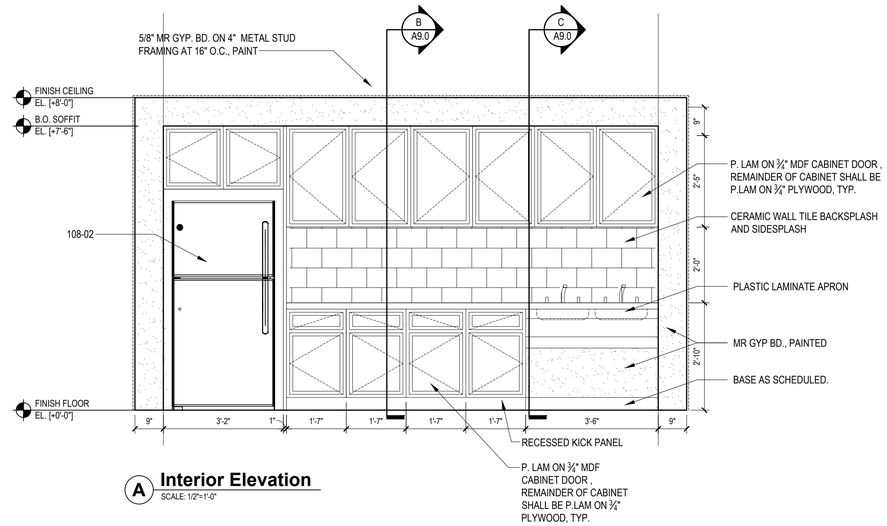

A Interior Elevation

SCALE: 1/2"=1'-0"

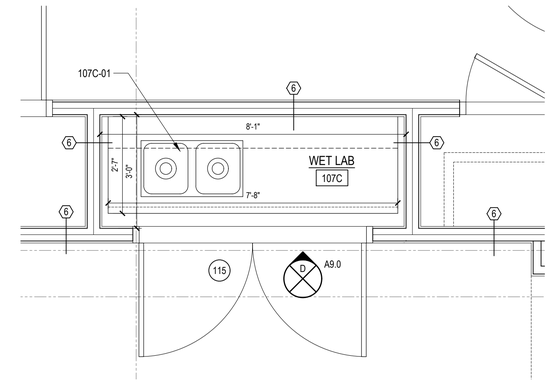

2 Enlarged Wet Lab Floor Plan

SCALE: 1/2"=1'-0"

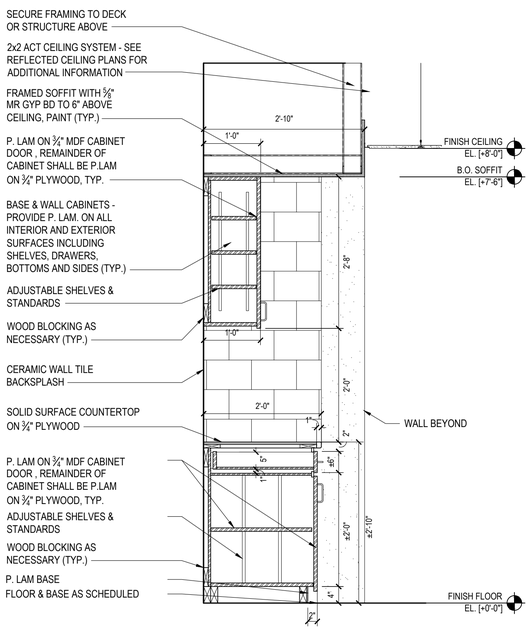

B Cabinet Section

SCALE: 3/4"=1'-0"

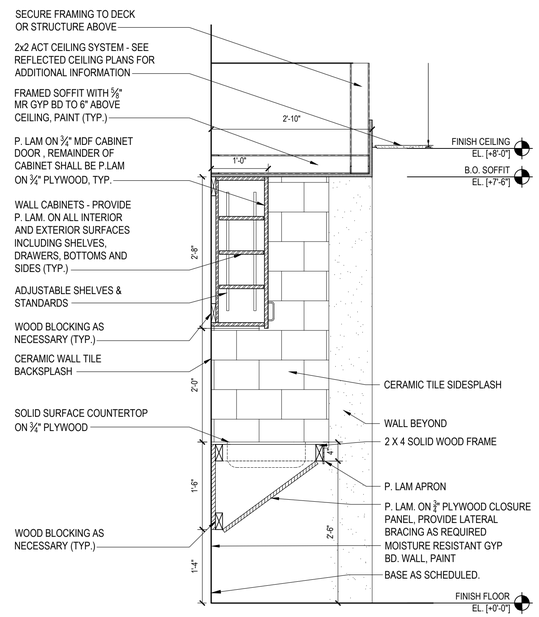

C Cabinet Section

SCALE: 3/4"=1'-0"

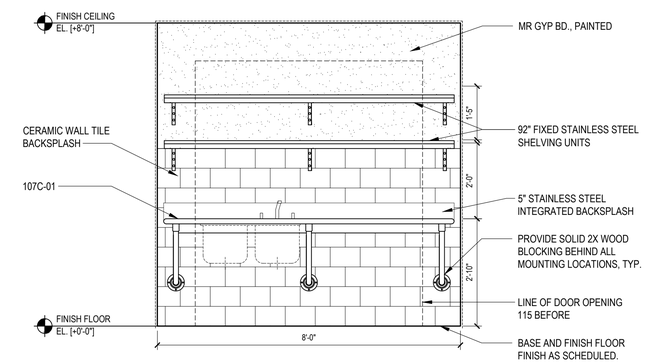

D Interior Elevation

SCALE: 1/2"=1'-0"

GENERAL CABINETRY NOTES:

1. PROVIDE LOCKS ON ALL DOORS AND DRAWERS. COORDINATE KEYING WITH CLIENT.
2. ALL EXPOSED ENDS ON CABINETS, COUNTERTOPS AND ENDS AGAINST KITCHEN EQUIPMENT AND APPLIANCES TO BE FINISHED WITH SAME MATERIALS AS FACE CABINET OR COUNTERTOP.
3. ALL WOOD ASSOCIATED WITH CABINETRY SHALL BE FSC CERTIFIED.
4. ALL CABINET DOORS & DRAWER FRONTS SHALL BE ¾" MDF AND REST OF CABINETS TO BE ¾" PLYWOOD.
5. ALL WOOD ASSOCIATED WITH CABINETRY SHALL BE FORMALDEHYDE FREE

EQUIPMENT SCHEDULE

ITEM NO.	DESCRIPTION	MANUFACTURER	MODEL	SIZE LxDxH	REMARKS
108-02	REFRIGERATOR	GE	GIE21GTHBB	32 7/8" X 34" X 66 3/4"	FURNISHED AND INSTALLED BY CONTRACT 'G', WATER LINE BY CONTRACT 'P'
107C-01	SS WALL MOUNTED TABLE W/ INTEGRAL DOUBLE	ADVANCED TABCO	TA-11-D-2	92" X 31" X 34" A.F.F.	FURNISHED AND INSTALLED BY CONTRACT 'G', ALL PIPING, CONNECTIONS & FAUCET TO BE FURNISHED AND INSTALLED BY CONTRACT 'P'; INCLUDE K-53 FAUCET AND MODIFIED TABLE LENGHT

GENERAL EQUIPMENT NOTES:

1. DO NOT ROUGH-IN CONSTRUCTION ELEMENTS OR PERFORM ANY CONSTRUCTION FROM SIZES PROVIDED. EQUIPMENT SIZES ARE PROVIDED FOR GENERAL INFORMATION ONLY. ACTUAL SIZES SHALL BE VERIFIED AND COORDINATED DURING CONSTRUCTION WITH SUBMISSIONS TO BE MADE BY CONTRACTOR.
2. FOR ADDITIONAL EQUIPMENT LOCATION INFORMATION, REFER TO ENLARGED PLANS, THIS SHEET.
3. REFER TO 'P' DRAWINGS FOR ADDITIONAL EQUIPMENT INFORMATION, TYP.

PROGRAM CONSULTANT:

Living with the BAY

CLIENTS:

NEW YORK STATE OF OPPORTUNITY Parks, Recreation and Historic Preservation

Governor's Office of Storm Recovery

PROJECT MANAGER:

Stantec

LEAD LANDSCAPE ARCHITECTS + ARCHITECTS:

H2M architects + engineers
538 Broad Hollow Road
4th Floor East
Melville, NY 11747
P:(631)756-8000
F:(631)694-4122

CERTIFIED ARBORISTS + LANDSCAPE ARCHITECTS:

CHENEY DESIGN LAB PC LANDSCAPE ARCHITECTURE PC

STRUCTURAL ENGINEERS:

LKB CONSULTING ENGINEERS

CIVIL ENGINEERS + LANDSCAPE ARCHITECTS:

Cashin Associates, P.C.
ENGINEERING - PLANNING - CONSTRUCTION MANAGEMENT

LANDSCAPE ARCHITECTS:

MATRIXNEWORLD
Engineering Program
Matrix New World Engineering, Land Surveying
Landscape Architecture, D.P.C.
442 State Route 35, Second Floor
Eatontown, New Jersey 07724
Tel: 732-389-2999
Fax: 973-240-1818
WBE / DBE / SBE
www.matrixnewworld.com
NEW JERSEY CERTIFICATE OF AUTHORIZATION No. 24GA27982000

SEAL

"ALTERATION OF THIS DOCUMENT EXCEPT BY A LICENSED PROFESSIONAL IS ILLEGAL"

THESE DOCUMENTS CONTAIN POTENTIALLY SENSITIVE INFORMATION AND SHALL BE USED FOR THEIR INTENDED PURPOSE. ONCE THE INTENDED PURPOSE HAS CEASED, THE DOCUMENTS SHALL BE DESTROYED IN A SECURE MANNER.

IT IS A VIOLATION OF STATE EDUCATION LAW FOR ANY PERSON, UNLESS UNDER THE DIRECTION OF A LICENSED ARCHITECT TO ALTER THIS DOCUMENT IN ANYWAY. ALTERATIONS MUST HAVE THE SEAL AFFIXED ALONG WITH A DESCRIPTION OF THE ALTERATIONS, DATE AND ARCHITECT'S SIGNATURE. COPYRIGHT © 2012

PHASE

90% SUBMISSION

Revisions

Number	Description	Date:
1		
2		
3		
4		
5		

Project Title

HEMPSTEAD LAKE STATE PARK

CONTRACT

NYSP
WORK ORDER: LI-022
CONTRACT: D004472
COA: 1290350/30377/33001/ PRK 4559

PROJECT #: NYSP-1503

DATE: JULY 2017

DESIGNED BY:

DRAWN BY:

CHECKED BY: REVIEWED BY:

SHEET TITLE

ENLARGED CABINETRY PLANS, ELEVATIONS, SECTIONS AND SCHEDULE

SHEET #

A9.0

C:\Users\aconcepcion\appdata\local\temp\AcPublish_8208\A9.0 - Kitchenette.dwg Last Modified: Jul 18, 2017 - 4:32pm Plotted on: Jul 25, 2017 - 1:52pm By aconcepcion

GENERAL CABINETRY NOTES:

SEE GENERAL CABINETRY NOTES ON A9.0.

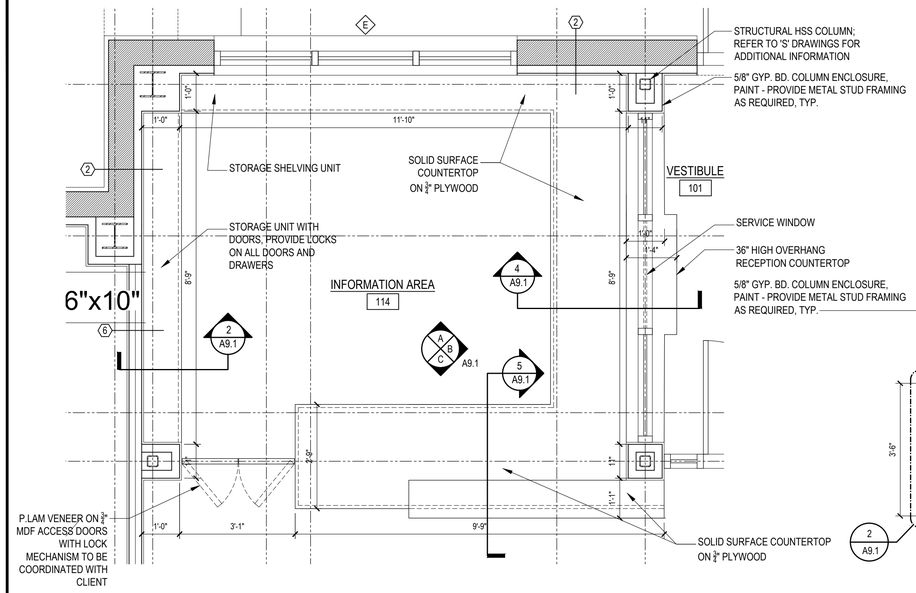

1 **Enlarged Information Area Plan**
SCALE: 1/2"=1'-0"

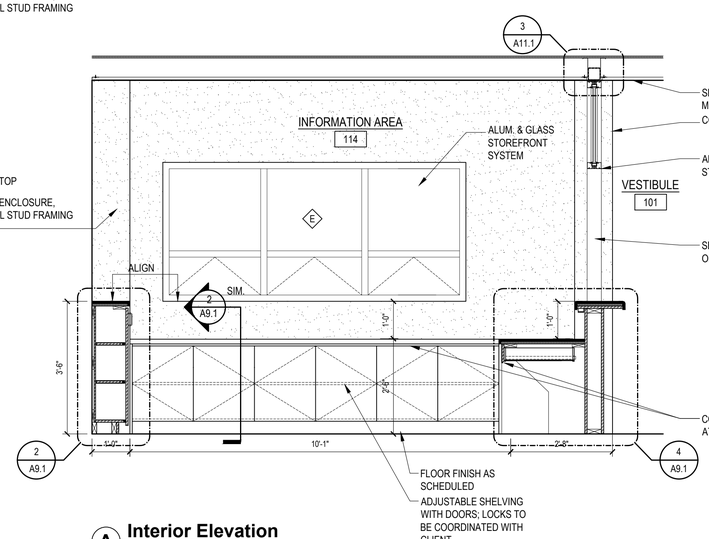

A **Interior Elevation**
SCALE: 1/2"=1'-0"

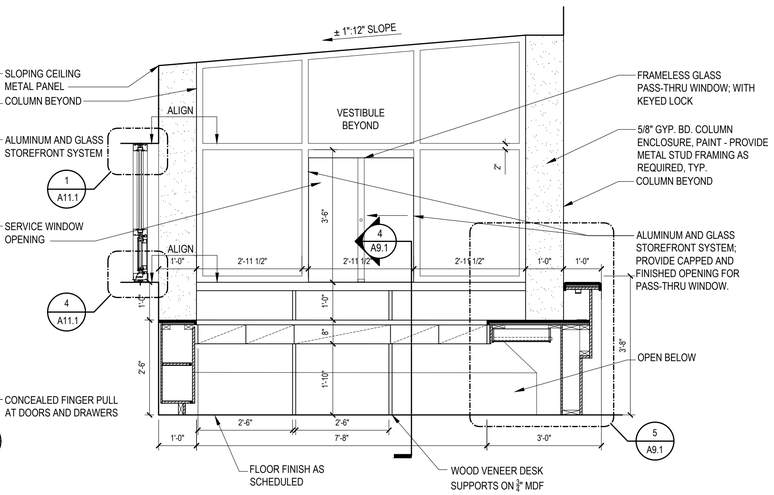

B **Interior Elevation**
SCALE: 1/2"=1'-0"

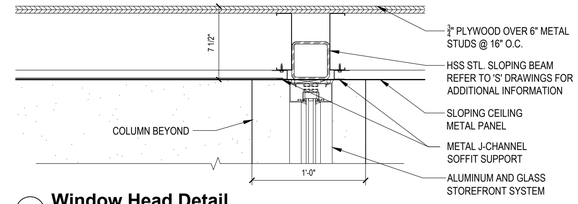

3 **Window Head Detail**
SCALE: 1 1/2"=1'-0"

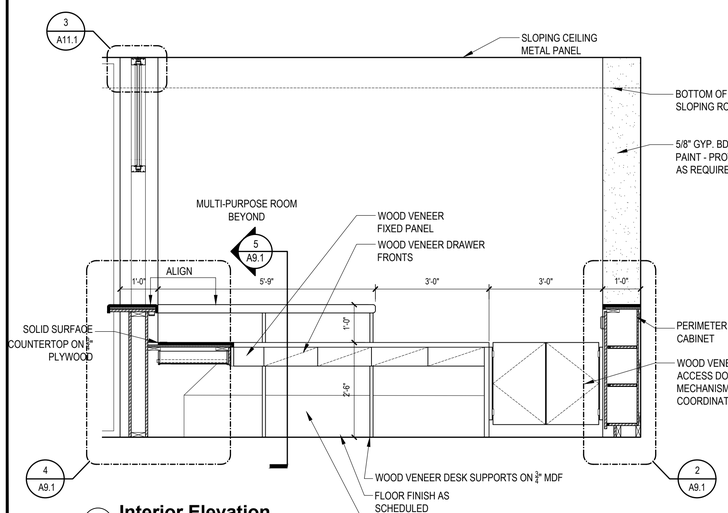

C **Interior Elevation**
SCALE: 1/2"=1'-0"

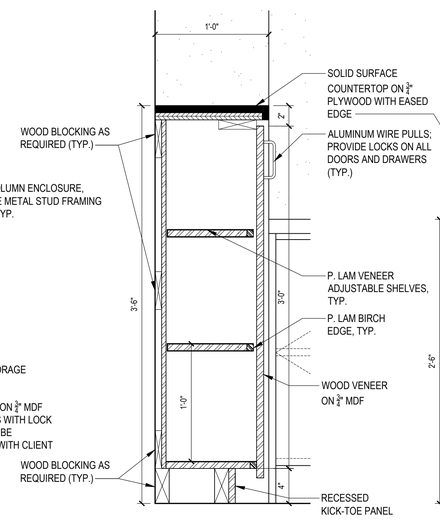

2 **Cabinet Section**
SCALE: 1 1/2"=1'-0"

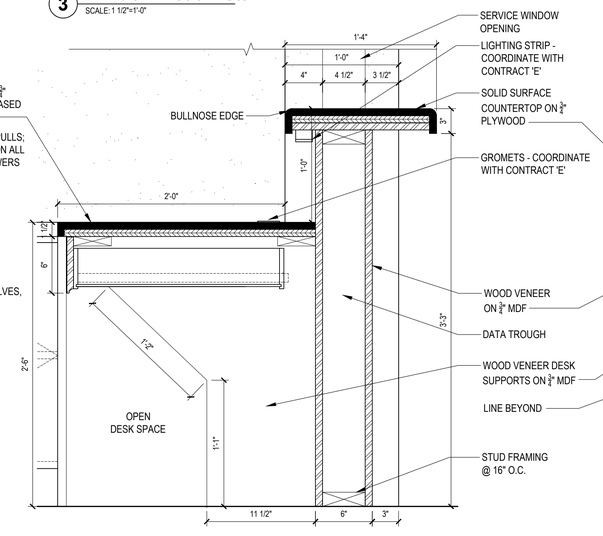

4 **Desk Section**
SCALE: 1 1/2"=1'-0"

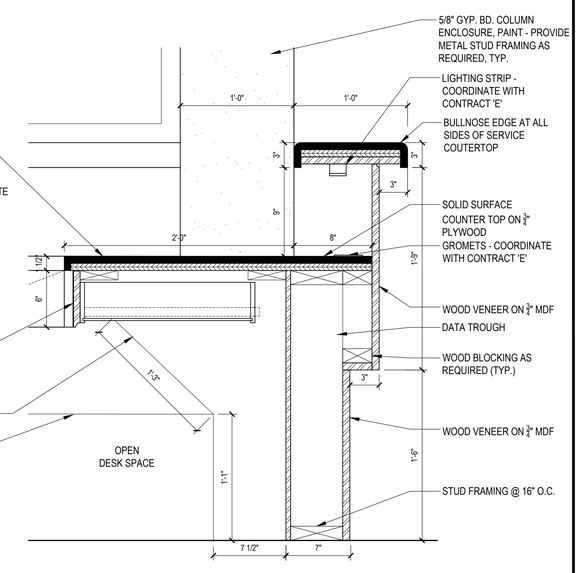

5 **Desk Section**
SCALE: 1 1/2"=1'-0"

PROGRAM CONSULTANT:

CLIENTS:

Parks, Recreation and Historic Preservation

Governor's Office of Storm Recovery

PROJECT MANAGER:

Stantec

LEAD LANDSCAPE ARCHITECTS + ARCHITECTS:

H2M architects + engineers
538 Broad Hollow Road
4th Floor East
Melville, NY 11747
P:(631)756-8000
F:(631)694-6122

CERTIFIED ARBORISTS + LANDSCAPE ARCHITECTS:

CHENEY DESIGN LA & PC

STRUCTURAL ENGINEERS:

LKB CONSULTING ENGINEERS

CIVIL ENGINEERS + LANDSCAPE ARCHITECTS:

Cashin Associates, P.C.
ENGINEERING - PLANNING - ENVIRONMENTAL - CONSTRUCTION MANAGEMENT

LANDSCAPE ARCHITECTS:

MATRIXNEWORLD
Engineering Program
Matrix New World Engineering, Land Surveying
Landscape Architecture, D.P.C.
442 State Route 35, Second Floor
Eatontown, New Jersey 07724
WBE / DBE / SBE
NEW JERSEY CERTIFICATE OF AUTHORIZATION No. 24GA27962000
Tel: 732-389-2999
Fax: 973-240-1818
www.matrixnewworld.com

SEAL

"ALTERATION OF THIS DOCUMENT EXCEPT BY A LICENSED PROFESSIONAL IS ILLEGAL"

THESE DOCUMENTS CONTAIN POTENTIALLY SENSITIVE INFORMATION AND SHALL BE USED FOR THEIR INTENDED PURPOSE. ONCE THE INTENDED PURPOSE HAS CEASED, THE DOCUMENTS SHALL BE DESTROYED IN A SECURE MANNER.

IT IS A VIOLATION OF STATE EDUCATION LAW FOR ANY PERSON, UNLESS UNDER THE DIRECTION OF A LICENSED ARCHITECT TO ALTER THIS DOCUMENT IN ANYWAY. ALTERATIONS MUST HAVE THE SEAL AFFIXED ALONG WITH A DESCRIPTION OF THE ALTERATIONS, DATE AND ARCHITECT'S SIGNATURE. COPYRIGHT © 2012

PHASE
90% SUBMISSION

Revisions

Number	Description	Date:
1		
2		
3		
4		
5		

Project Title

HEMPSTEAD LAKE STATE PARK

CONTRACT
NYSP
WORK ORDER: LI-022
CONTRACT: D004472
COA: 1290350/30377/33001/ PRK 4559

PROJECT # NYSP-1503
DATE: JULY 2017
DESIGNED BY: ACP
DRAWN BY: ALC
CHECKED BY:
REVIEWED BY:

SHEET TITLE
ENLARGED INFORMATION AREA PLANS, ELEVATIONS AND DETAIL SECTIONS

SHEET # **A9.1**

C:\Users\aconcepcion\appdata\local\temp\AcPublish_11568\A9.1 - Information Area.dwg Last Modified: Jul 25, 2017 - 1:49pm Plotted on: Jul 26, 2017 - 12:51pm By aconcepcion

DOOR SCHEDULE

● DENOTES ROOM SIGNAGE, SELF CLOSING, PANIC DEVICE, AND WEATHERSTRIPPING TO BE PROVIDED

LEVEL	DOOR NO.	LOCATION	DOOR OPENING SIZE	DOOR TYPE.	MATERIAL	FINISH	FRAME DETAIL	SADDLE TYPE	LABEL	SELF CLOSING	PANIC DEVICE	ROOM SIGNAGE	WEATHER-STRIPPING	REMARKS
BASEMENT	B01	STORAGE ROOM TO EXTERIOR	3'-0" x 7'-0"	A	HM	PT	3 & 4/A10.0	S-1	-	●	-	-	●	
	B02	STORAGE ROOM TO EXTERIOR	3'-0" x 7'-0"	A	HM	PT	3 & 4/A10.0	S-1	-	●	-	-	●	
	B03	STORAGE ROOM TO EXTERIOR	3'-0" x 7'-0"	A	HM	PT	3 & 4/A10.0	S-1	-	●	-	-	●	
	B04	STORAGE ROOM TO STAIR A	3'-0" x 7'-0"	A	HM	PT	1 & 2/A10.0	S-2	C	●	-	●	-	
	B05	STORAGE ROOM TO STORAGE	3'-0" x 7'-0"	B	HM	PT	1 & 2/A10.0	S-2	-	-	-	●	-	
	B06	ELECTRICAL ROOM TO STORAGE ROOM	3'-0" x 7'-0"	B	HM	PT	1 & 2/A10.0	S-2	-	●	●	●	-	
	B07	STORAGE ROOM TO MECHANICAL ROOM	3'-0" x 7'-0"	B	HM	PT	1 & 2/A10.0	S-2	-	-	-	●	-	
FIRST FLOOR	101	VESTIBULE TO EXTERIOR	(2) 3'-0" x 7'-0"	-	ALUM & GLASS	PRE-FIN	-	S-1	-	●	●	-	●	SEE WINDOW ELEVATIONS ON A11.0 FOR ADDITIONAL INFORMATION
	102	OVERLOOK DECK TO MULTIPURPOSE ROOM	3'-0" x 7'-0"	-	ALUM & GLASS	PRE-FIN	-	S-1	-	●	-	-	●	SEE WINDOW ELEVATIONS ON A11.0 FOR ADDITIONAL INFORMATION
	103	OVERLOOK DECK TO MULTIPURPOSE ROOM	3'-0" x 7'-0"	-	ALUM & GLASS	PRE-FIN	-	S-1	-	●	-	-	●	SEE WINDOW ELEVATIONS ON A11.0 FOR ADDITIONAL INFORMATION
	104	STAIR 'A' TO EXTERIOR	3'-0" x 7'-0"	-	ALUM & GLASS	PRE-FIN	-	S-1	-	●	●	-	●	SEE WINDOW ELEVATIONS ON A11.0 FOR ADDITIONAL INFORMATION
	105	CLOSET TO KITCHENNETTE	(2) 3'-0" x 7'-0"	C	WD	ST	1 & 2/A10.0	-	-	-	-	-	-	
	106	KITCHENNETTE / WET LAB TO STAIR LOBBY	3'-0" x 7'-0"	A	WD	ST	1 & 2/A10.0	S-2	C	●	-	●	-	
	107	MULTIPURPOSE ROOM TO KITCHENNETTE / WET LAB	3'-0" x 7'-0"	B	WD	ST	1 & 2/A10.0	S-2	-	-	-	●	-	
	108	MULTIPURPOSE ROOM TO STAIR LOBBY	3'-0" x 7'-0"	A	WD	ST	1 & 2/A10.0	S-2	C	●	●	●	-	
	109	HALLWAY TO STAIR LOBBY	3'-0" x 7'-0"	A	WD	ST	1 & 2/A10.0	S-2	C	●	-	-	-	
	110	HALLWAY TO STORAGE	3'-0" x 7'-0"	B	WD	ST	1 & 2/A10.0	S-2	-	-	-	●	-	
	111	HALLWAY TO MONITOR AND CONTROL ROOM	3'-0" x 7'-0"	B	WD	ST	1 & 2/A10.0	S-2	-	-	-	●	-	
	112	HALLWAY TO CONFERENCE ROOM	3'-0" x 7'-0"	B	WD	ST	1 & 2/A10.0	S-2	-	-	-	●	-	
	113	CLOSET TO MULTIPURPOSE ROOM	3'-0" x 7'-0"	B	WD	ST	1 & 2/A10.0	-	-	-	-	●	-	
	114	CLOSET TO MULTIPURPOSE ROOM	3'-0" x 7'-0"	B	WD	ST	1 & 2/A10.0	-	-	-	-	●	-	
	115	WETLAB TO MULTIPURPOSE ROOM	(2) 3'-0" x 7'-0"	C	WD	ST	1 & 2/A10.0	S-2	-	-	-	●	-	
	116	LOBBY TO HALLWAY	3'-0" x 7'-0"	A	WD	ST	1 & 2/A10.0	S-2	-	●	-	-	-	
	117	LOBBY TO VESTIBULE	(2) 3'-0" x 7'-0"	-	ALUM & GLASS	PRE-FIN	-	S-2	-	●	●	-	-	SEE WINDOW ELEVATIONS ON A11.0 FOR ADDITIONAL INFORMATION
	118	MEN'S BATHROOM TO HALL	3'-0" x 7'-0"	B	WD	ST	1 & 2/A10.0	S-3	-	●	-	●	-	PROVIDE LOUVER
	119	J.C. TO HALL	3'-0" x 7'-0"	B	WD	ST	1 & 2/A10.0	S-3	-	●	-	●	-	PROVIDE LOUVER
	120	FAMILY BATHROOM TO HALL	3'-0" x 7'-0"	B	WD	ST	1 & 2/A10.0	S-3	-	●	-	●	-	PROVIDE LOUVER
	121	WOMEN'S BATHROOM TO HALL	3'-0" x 7'-0"	B	WD	ST	1 & 2/A10.0	S-3	-	●	-	●	-	PROVIDE LOUVER
	122	CLOSET TO HALLWAY	3'-0" x 7'-0"	B	WD	ST	1 & 2/A10.0	-	-	-	-	●	-	
	123	FOLDING PARTITION POCKET TO HALLWAY	3'-0" x 7'-0"	B	WD	ST	1 & 2/A10.0	-	-	-	-	●	-	
	124	STAIR A	3'-0" x 7'-0"	A	WD	ST	1 & 2/A10.0	-	-	-	-	-	-	

ABBREVIATIONS:

ALUM & GLASS	=	ALUMINUM AND GLASS STOREFRONT
HM	=	HOLLOW METAL
PRE-FIN	=	PRE-FINISHED PAINT
PT	=	PAINT
ST	=	STAIN
VAR	=	CLEAR VARNISH
WD	=	WOOD

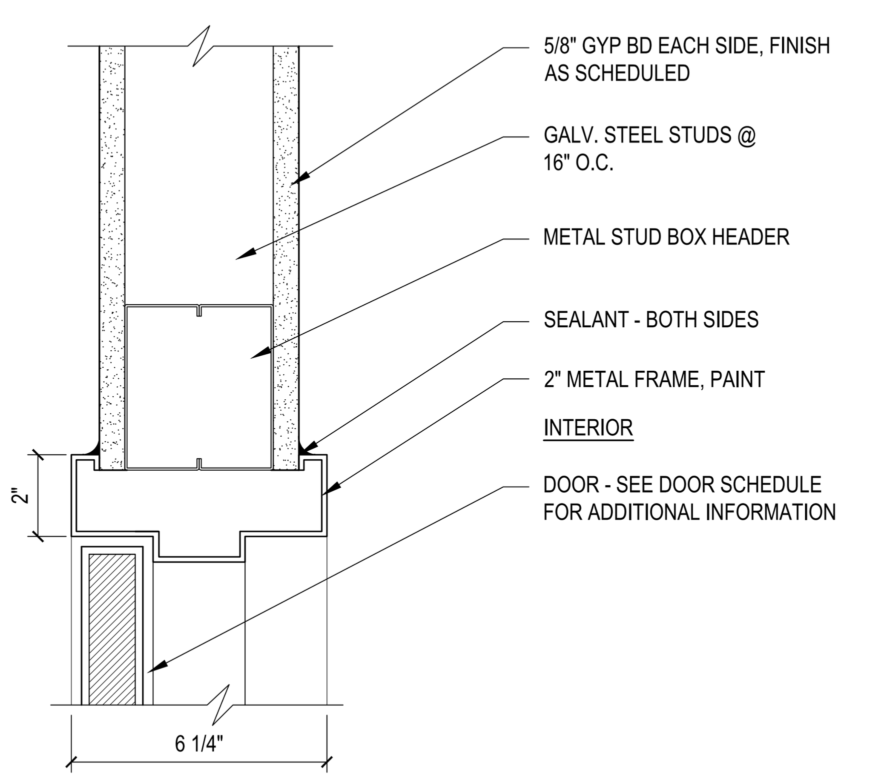

1 **Door Head Detail**
SCALE: 3" = 1'-0"

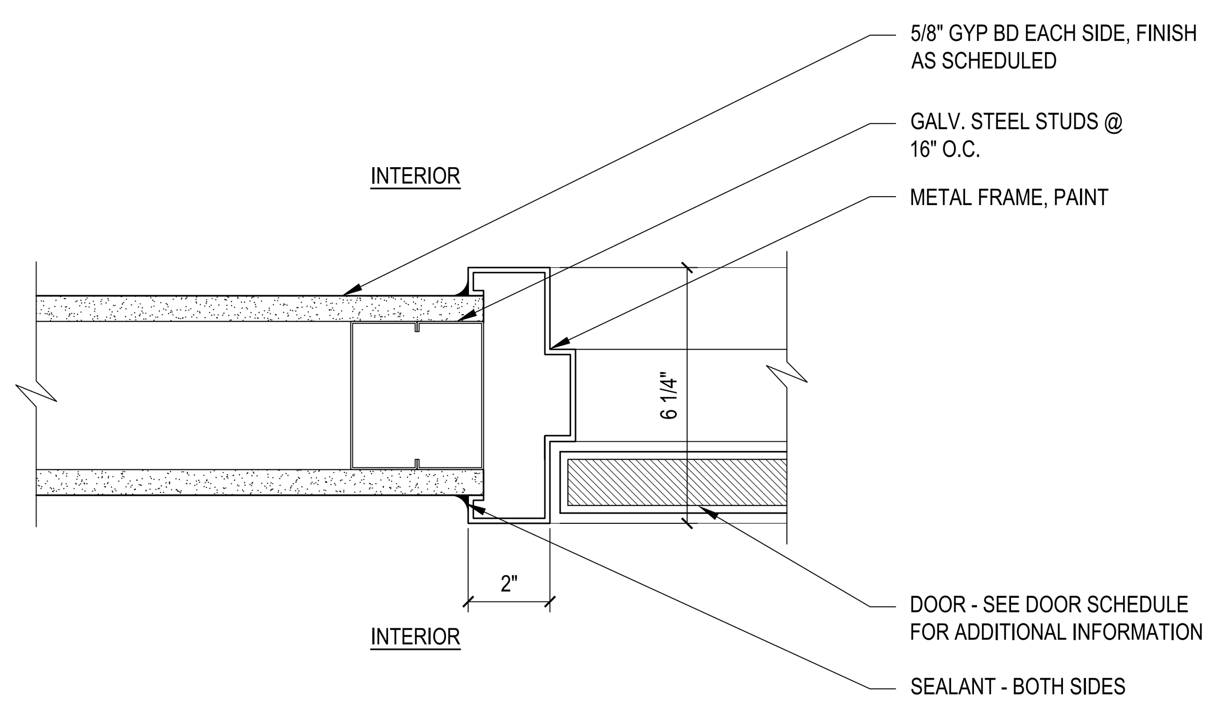

2 **Door Jamb Detail**
SCALE: 3" = 1'-0"

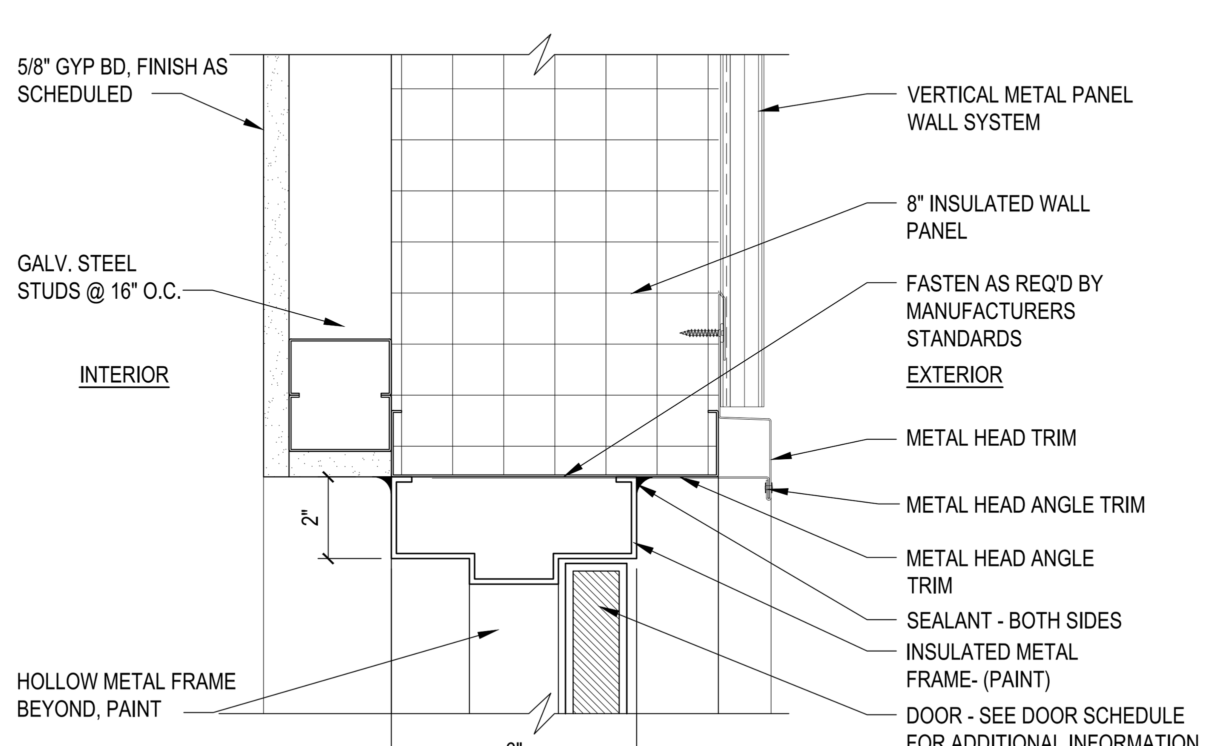

3 **Door Head Detail**
SCALE: 3" = 1'-0"

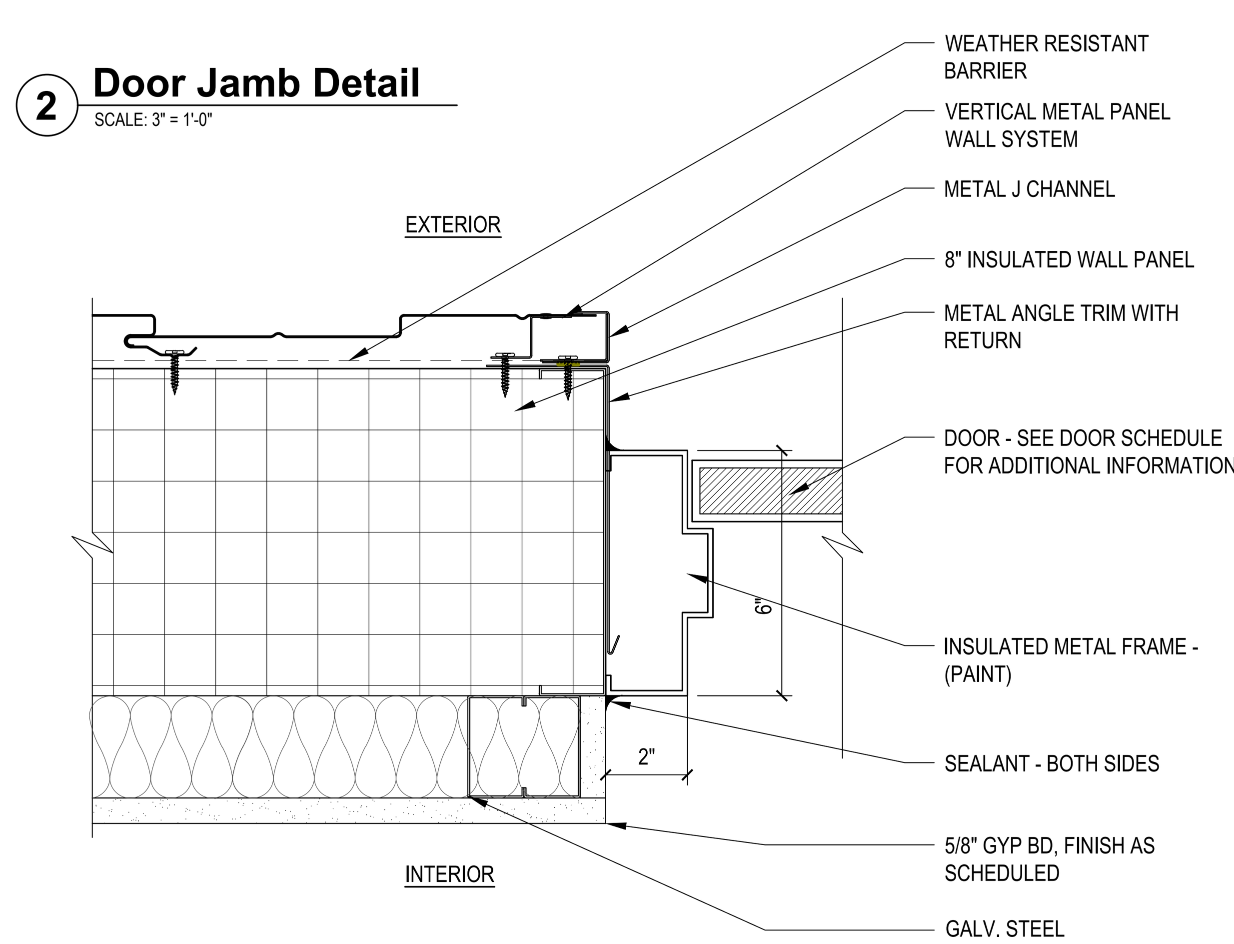

4 **Door Jamb Detail**
SCALE: 3" = 1'-0"

DOOR TYPES:

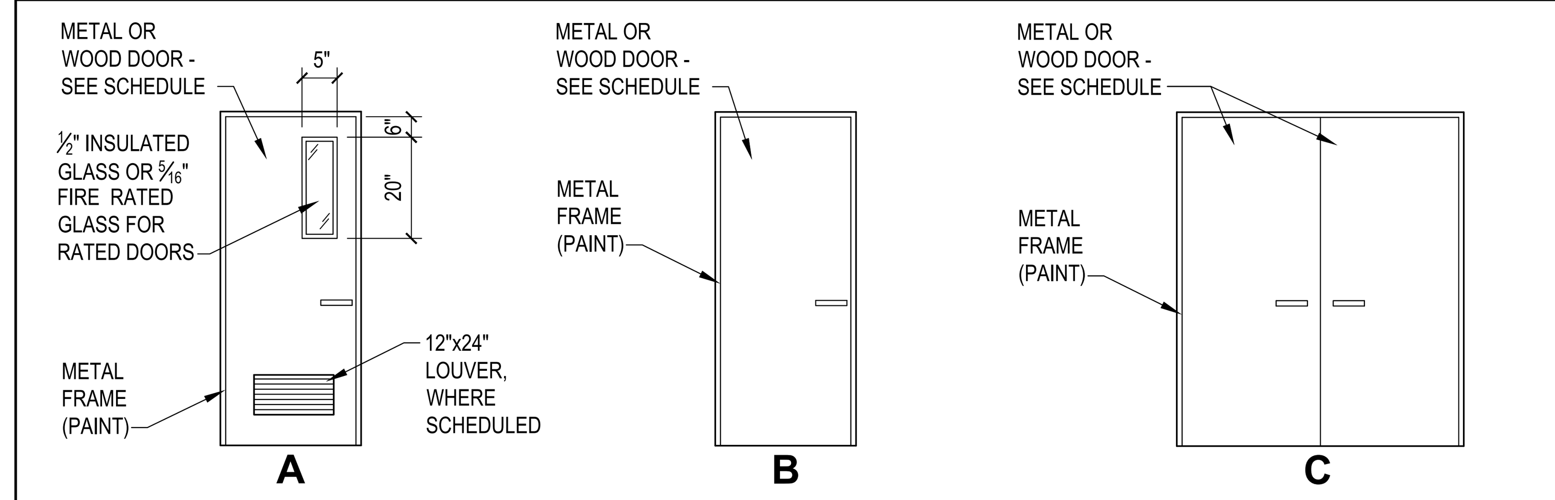

DOOR SADDLES:

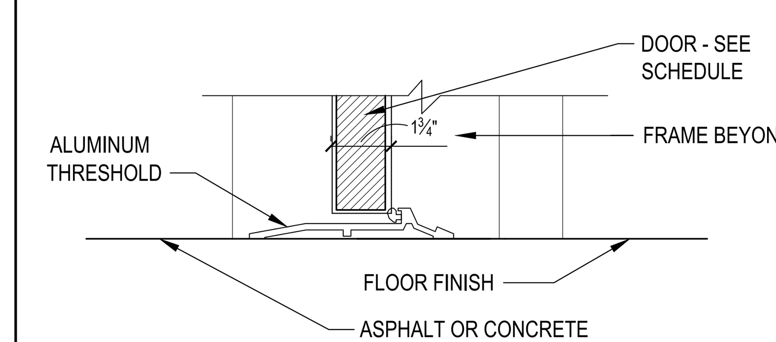

S-1 **Saddle Detail**
SCALE: N.T.S.

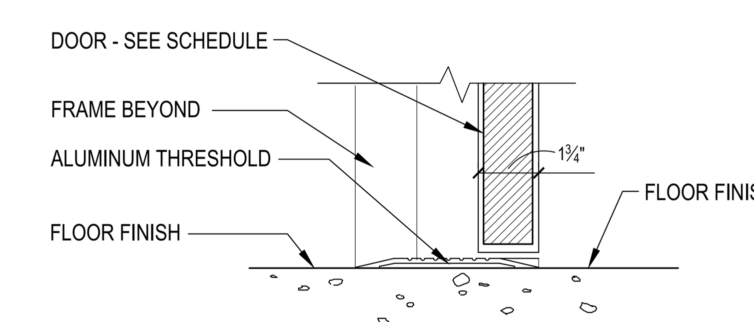

S-2 **Saddle Detail**
SCALE: N.T.S.

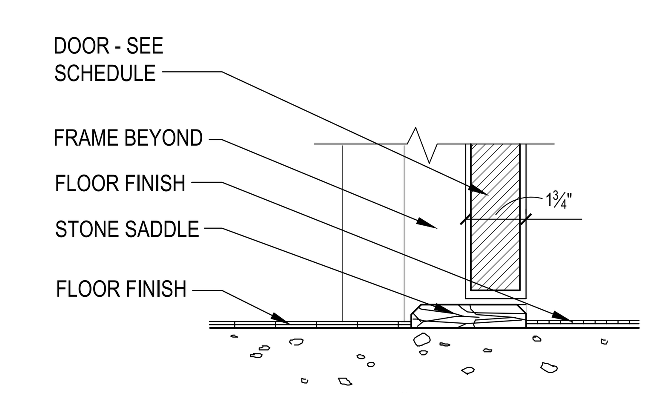

S-3 **Saddle Detail**
SCALE: N.T.S.

DOOR FRAME:

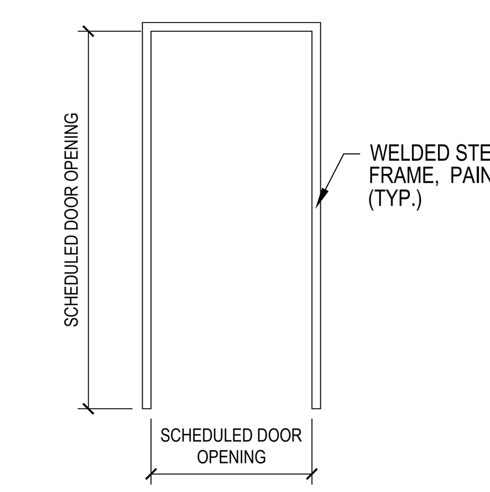

FIRE DOOR CLASSIFIED OPENINGS		
CLASS / LABEL	RATING	GLASS SIZE PERMITTED
A	3 Hrs.	NONE
B	1-1/2 Hrs.	100 sq.in. / DOOR LEAF
C	3/4 Hr.	1296 sq.in. / DOOR LEAF
D	1-1/2 Hrs.	NONE
E	3/4 Hr.	1296 sq.in.

1. CLASS D - LOCATION: EXTERIOR WALLS SUBJECT TO SEVERE FIRE EXPOSURE FROM OUTSIDE.
2. CLASS E - LOCATION: EXTERIOR WALLS SUBJECT TO MODERATE OR LIGHT FIRE EXPOSURE FROM OUTSIDE.

GENERAL DOOR NOTES:

1. ALL DOOR FRAMES TO BE SET 4" FROM FINISHED WALL SURFACE UNLESS DIMENSIONED OR NOTED OTHERWISE.
2. ALL EXTERIOR DOORS AND DOORS IN FIRE RATED PARTITIONS ARE TO BE SELF CLOSING.
3. ALL EXTERIOR DOORS ARE TO BE WEATHERSTRIPPED.
4. ALL GLASS LIGHTS IN DOORS ARE TO BE TEMPERED GLASS.
5. ALL EXTERIOR HOLLOW METAL DOORS AND DOORS TO THE STORAGE ROOM TO BE INSULATED.
6. ALL LOUVERS IN LABELED DOORS ARE TO BE FUSIBLE LINK TYPE WITH MATCHING LABEL.
7. ALL INTERIOR DOORS SHALL HAVE A ⅝" UNDERCUT. UNDERCUT SHALL BE MEASURED FROM THE TOP OF SADDLE. CONTRACTOR TO VERIFY IN FIELD AND COORDINATE WITH FINISHES.

PROGRAM CONSULTANT: Living with the BAY
CLIENTS: NEW YORK STATE OF OPPORTUNITY. Parks, Recreation and Historic Preservation
Governor's Office of Storm Recovery
PROJECT MANAGER: Stantec
LEAD LANDSCAPE ARCHITECTS + ARCHITECTS: H2M architects + engineers
538 Broad Hollow Road
4th Floor East
Melville, NY 11747
P:(631)756-8000
F:(631)694-4122
CERTIFIED ARBORISTS + LANDSCAPE ARCHITECTS: GIBNEY DESIGN LA PC LANDSCAPE ARCHITECTURE PC
STRUCTURAL ENGINEERS: LKB CONSULTING ENGINEERS
CIVIL ENGINEERS + LANDSCAPE ARCHITECTS: Cashin Associates, P.C. ENGINEERING · PLANNING · CONSTRUCTION MANAGEMENT
LANDSCAPE ARCHITECTS: MATRIXNEWORLD Engineering Progress
Matrix New World Engineering, Land Surveying and Landscape Architecture, P.C.
442 State Route 35, Second Floor
Eatontown, New Jersey 07724
Tel: 732-588-2999
Fax: 973-240-1818
www.matrixneworld.com
NEW JERSEY CERTIFICATE OF AUTHORIZATION No. 24GA27962300

SEAL

"ALTERATION OF THIS DOCUMENT EXCEPT BY A LICENSED PROFESSIONAL IS ILLEGAL"

THESE DOCUMENTS CONTAIN POTENTIALLY SENSITIVE INFORMATION AND SHALL BE USED FOR THEIR INTENDED PURPOSE. ONCE THE INTENDED PURPOSE HAS CEASED, THE DOCUMENTS SHALL BE DESTROYED IN A SECURE MANNER.

IT IS A VIOLATION OF STATE EDUCATION LAW FOR ANY PERSON, UNLESS UNDER THE DIRECTION OF A LICENSED ARCHITECT TO ALTER THIS DOCUMENT IN ANYWAY. ALTERATIONS MUST HAVE THE SEAL AFFIXED ALONG WITH A DESCRIPTION OF THE ALTERATIONS, DATE AND ARCHITECT'S SIGNATURE. COPYRIGHT © 2012

PHASE
90% SUBMISSION

Revisions Number	Description	Date:
1		
2		
3		
4		
5		

Project Title
HEMPSTEAD LAKE STATE PARK

CONTRACT
NYSP
WORK ORDER: LI-022
CONTRACT: D004472
COA: 1290350/30377/33001/ PRK 4559

PROJECT #: NYSP-1503
DATE: JULY 2017
DESIGNED BY: ACP
DRAWN BY: TJS
CHECKED BY:
REVIEWED BY:

SHEET TITLE
DOOR SCHEDULE AND DETAILS

SHEET # **A10.0**

C:\Users\aconcepcion\appdata\local\temp\AcPublish_7208\A10.0 - Door Schedule.dwg Last Modified: Jul 18, 2017 - 8:09pm Plotted on: Jul 19, 2017 - 1:48pm By aconcepcion

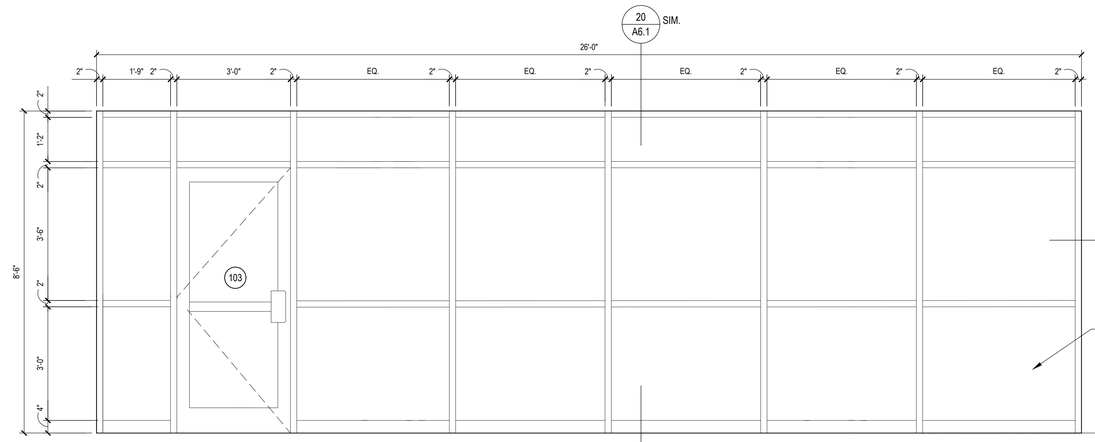

A Window Elevation
SCALE: 1/2"=1'-0"

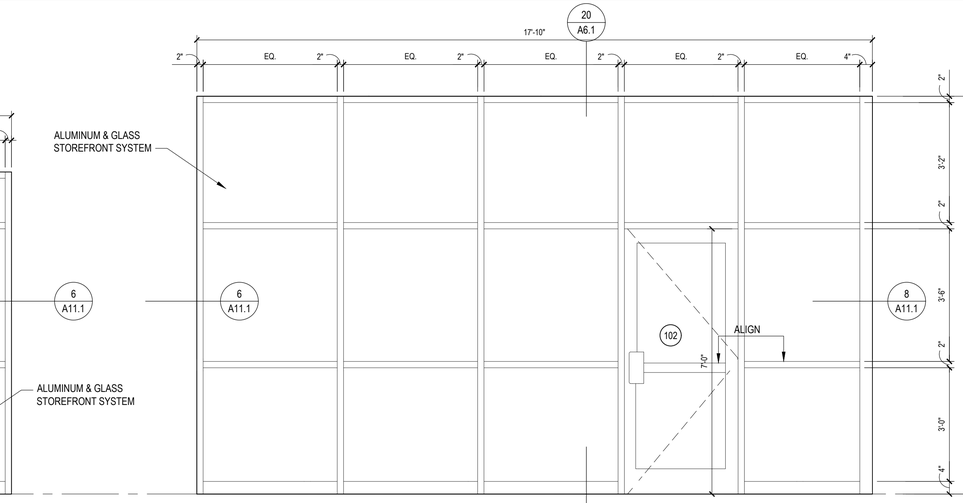

B Window Elevation
SCALE: 1/2"=1'-0"

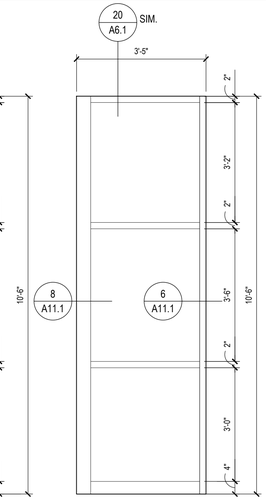

B' Window Elevation
SCALE: 1/2"=1'-0"

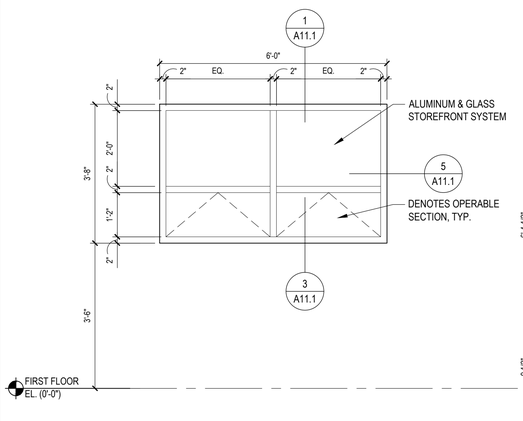

C Window Elevation
SCALE: 1/2"=1'-0"

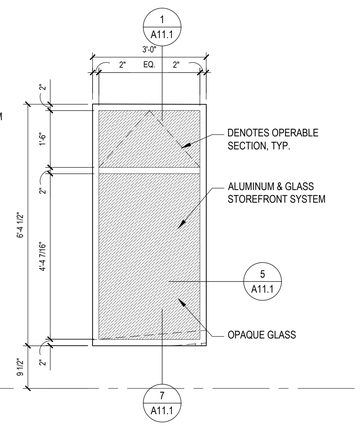

D Window Elevation
SCALE: 1/2"=1'-0"

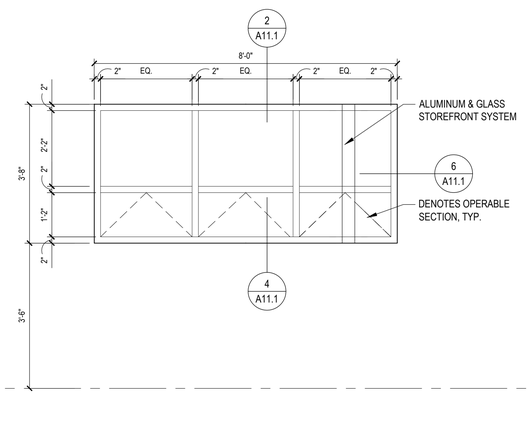

E Window Elevation
SCALE: 1/2"=1'-0"

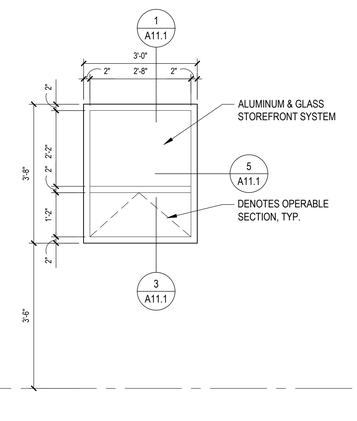

F Window Elevation
SCALE: 1/2"=1'-0"

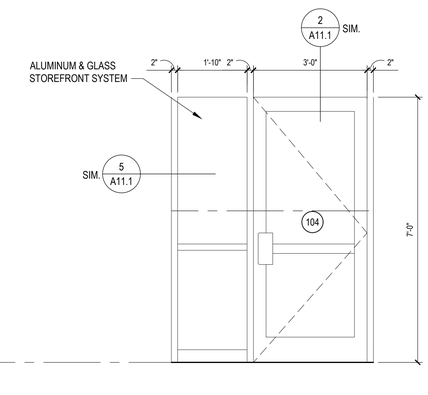

G Window Elevation
SCALE: 1/2"=1'-0"

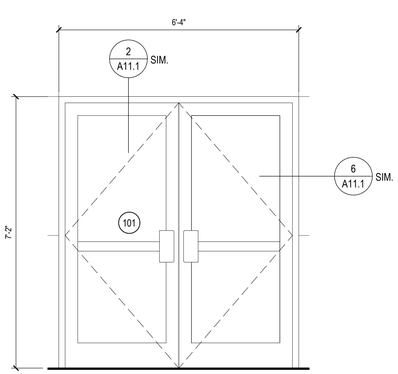

H Exterior Door Elevation
SCALE: 1/2"=1'-0"

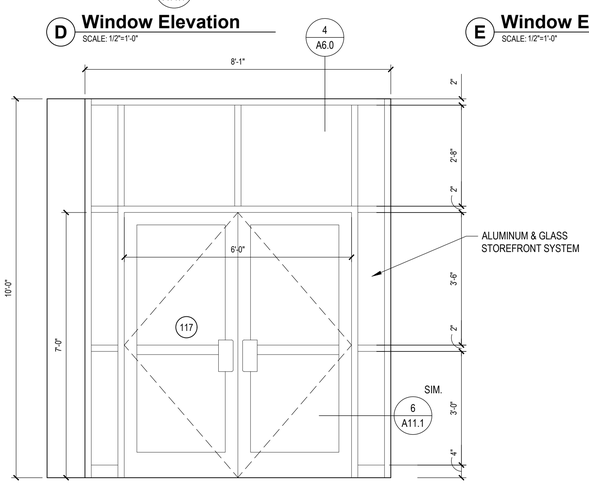

H Interior Door Elevation
SCALE: 1/2"=1'-0"

STOREFRONT DOOR AND WINDOW NOTES:

1. PROVIDE ALL NECESSARY CLIPS/FASTENERS REQUIRED FOR FINAL CONNECTION OF STOREFRONT TO STRUCTURAL STEEL. ANY ADDITIONAL MIDSPAN STRUCTURE AS REQUIRED BY MANUFACTURER FOR A COMPLETE INSTALLATION IS TO BE PROVIDED BY CONTRACTOR AT NO ADDITIONAL COST TO THE OWNER.
2. ALL GLAZING IN DOORS, FIXED PANELS ADJACENT TO DOORS, GLAZING WITHIN A 24" ARC OF A CLOSED DOOR, AND GLAZING WITHIN 1'-6" OF A FINISHED FLOOR OR MEZZANINE SHALL BE FULLY TEMPERED SAFETY GLASS COMPLYING WITH THE NEW YORK STATE BUILDING CODE.
3. ALL GLAZING TO BE 1" INSULATED GLASS.
4. ALL SPANDREL PANELS TO BE 1" INSULATED OPAQUE PANELS. PANELS TO BE FINISHED ON EXPOSED SIDE(S). COLOR AND FINISH TO BE SELECTED BY ARCHITECT.
5. ALL ALUMINUM FRAMES ARE TO BE ISOLATED FROM DISSIMILAR METALS WITH ¼" MINIMUM KORALATH SHIM MATERIAL.
6. STOREFRONT SYSTEM TO RECEIVE ¼" SHIM AT BASE AND ¾" SHIM AT HEAD (TYP), WITH BACKER ROD AND SEALANT AT EXPOSED LOCATIONS.
7. PROVIDE STEEL IN FRAME AS REQUIRED TO MEET WIND LOADS DESIGNED BY MANUFACTURER.
8. VERTICAL FRAMING MEMBERS ARE TO RUN CONTINUOUS TO BUILDING STRUCTURE AS REQUIRED.
9. VERIFY ALL DIMENSIONS WITH FIELD CONDITIONS. COORDINATE OVERALL STOREFRONT DIMENSIONS WITH INSTALLATION OF WALL PANELS AND STRUCTURAL STEEL AND ADJUST DIMENSIONS ACCORDINGLY. ANY ADJUSTMENTS TO DIMENSIONS MUST BE NOTED ON SHOP DRAWING.
10. INTERIOR FACE OF STOREFRONT SYSTEM FRAME TO ALIGN WITH INTERIOR FACE OF STRUCTURAL INSULATED PANEL OR INTERIOR FACE OF FOUNDATION WALL BELOW (TYPICAL FOR ALL).
11. PROVIDE ANY INTERNAL STEEL / STRUCTURE AS REQUIRED BY THE MANUFACTURER AND DESIGN LOAD CRITERIA.

PROGRAM CONSULTANT:
Living with the BAY

CLIENTS:
NEW YORK STATE OF OPPORTUNITY. Parks, Recreation and Historic Preservation
Governor's Office of Storm Recovery

PROJECT MANAGER:
Stantec

LEAD LANDSCAPE ARCHITECTS + ARCHITECTS:
H2M architects + engineers
538 Broad Hollow Road
4th Floor East
Melville, NY 11747
P:(631)756-8000
F:(631)694-4122

CERTIFIED ARBORISTS + LANDSCAPE ARCHITECTS:
CHENEY DESIGN LA & PC LANDSCAPE ARCHITECTURE PC

STRUCTURAL ENGINEERS:
LKB CONSULTING ENGINEERS

CIVIL ENGINEERS + LANDSCAPE ARCHITECTS:
Cashin Associates, P.C.
ENGINEERING - PLANNING - CONSTRUCTION MANAGEMENT

LANDSCAPE ARCHITECTS:
MATRIXNEWORLD
Engineering Program
Matrix New World Engineering, Land Surveying
and Landscape Architecture, P.C.
442 State Route 35, Second Floor
Eatontown, New Jersey 07724
WBE / DBE / SBE
NEW JERSEY CERTIFICATE OF AUTHORIZATION No. 24GA27962000
Tel: 732-389-2999
Fax: 973-240-1818
www.matrixnewworld.com

SEAL

"ALTERATION OF THIS DOCUMENT EXCEPT BY A LICENSED PROFESSIONAL IS ILLEGAL"

THESE DOCUMENTS CONTAIN POTENTIALLY SENSITIVE INFORMATION AND SHALL BE USED FOR THEIR INTENDED PURPOSE. ONCE THE INTENDED PURPOSE HAS CEASED, THE DOCUMENTS SHALL BE DESTROYED IN A SECURE MANNER.

IT IS A VIOLATION OF STATE EDUCATION LAW FOR ANY PERSON, UNLESS UNDER THE DIRECTION OF A LICENSED ARCHITECT TO ALTER THIS DOCUMENT IN ANYWAY. ALTERATIONS MUS HAVE THE SEAL AFFIXED ALONG WITH A DESCRIPTION OF THE ALTERATIONS, DATE AND ARCHITECT'S SIGNATURE. COPYRIGHT © 2012

PHASE
90% SUBMISSION

Revisions

Number	Description	Date:
1		
2		
3		
4		
5		

Project Title

HEMPSTEAD LAKE STATE PARK

CONTRACT
NYSP
WORK ORDER: LI-022
CONTRACT: D004472
COA: 1290350/30377/33001/ PRK 4559

PROJECT #: NYSP-1503
DATE: JULY 2017
DESIGNED BY:
DRAWN BY:
CHECKED BY:
REVIEWED BY:

SHEET TITLE
WINDOW ELEVATIONS AND DETAILS

SHEET #
A11.0

C:\Users\aconcepcion\appdata\local\temp\AcPublish_7208\A11.0 - Windows.dwg Last Modified: Jul 19, 2017 - 11:34am Plotted on: Jul 19, 2017 - 1:50pm By aconcepcion

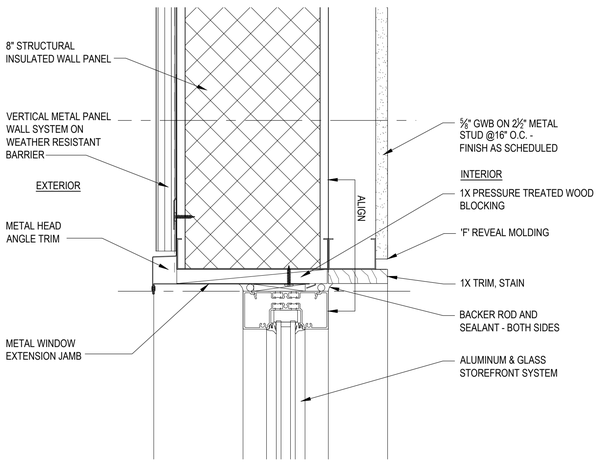

1 Window Head Detail
SCALE: 3"=1'-0"

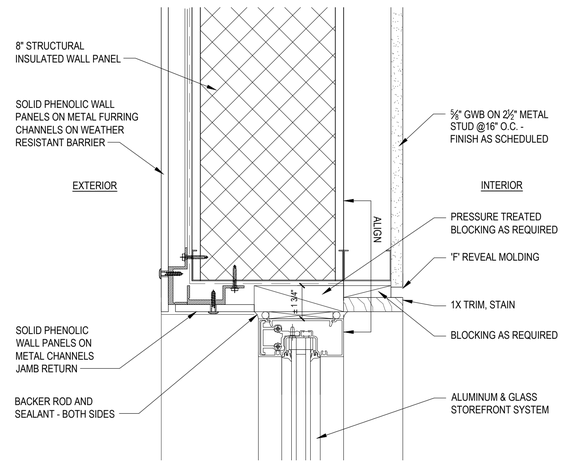

2 Window Head Detail
SCALE: 3"=1'-0"

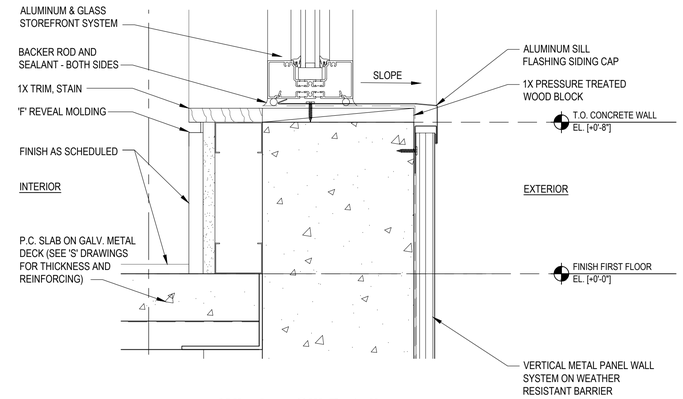

7 Window Sill Detail
SCALE: 3"=1'-0"

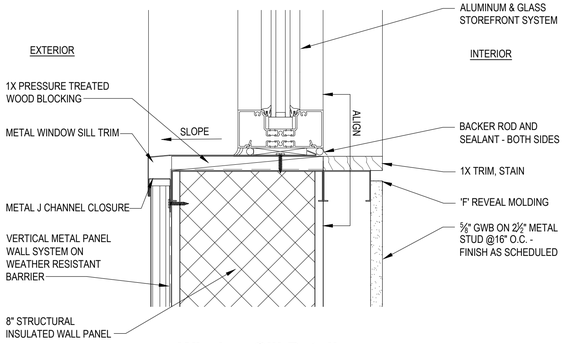

3 Window Sill Detail
SCALE: 3"=1'-0"

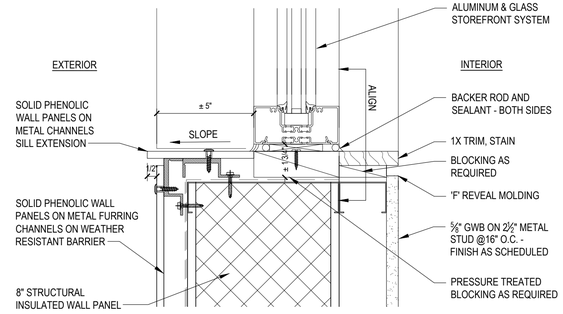

4 Window Sill Detail
SCALE: 3"=1'-0"

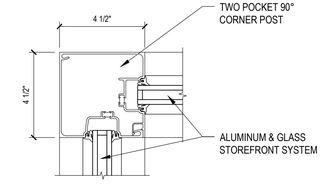

8 Corner Post Detail
SCALE: 3"=1'-0"

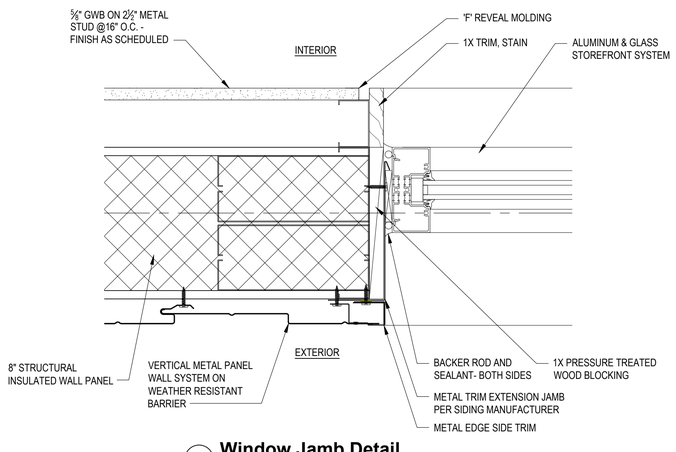

5 Window Jamb Detail
SCALE: 3"=1'-0"

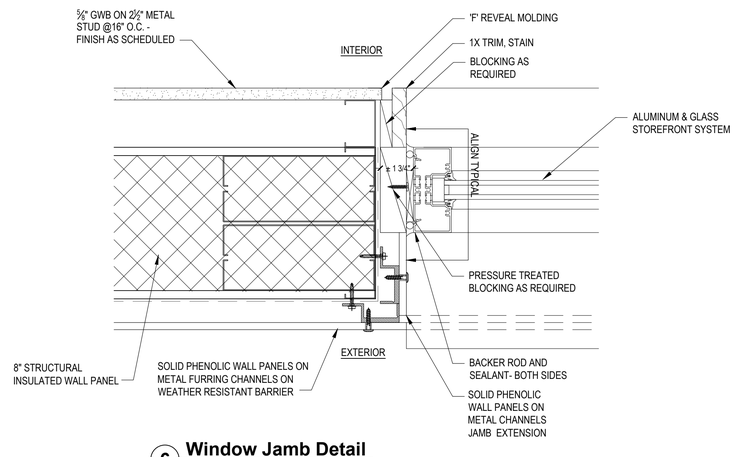

6 Window Jamb Detail
SCALE: 3"=1'-0"

PROGRAM CONSULTANT:

Living with the BAY

CLIENTS:

NEW YORK STATE OF OPPORTUNITY. Parks, Recreation and Historic Preservation

Governor's Office of Storm Recovery

PROJECT MANAGER:

Stantec

LEAD LANDSCAPE ARCHITECTS + ARCHITECTS:

H2M architects + engineers
538 Broad Hollow Road
4th Floor East
Melville, NY 11747
P:(631)756-8000
F:(631)694-4122

CERTIFIED ARBORISTS + LANDSCAPE ARCHITECTS:

CHENEY DESIGN LA & PC LANDSCAPE ARCHITECTURE PC

STRUCTURAL ENGINEERS:

LKB CONSULTING ENGINEERS

CIVIL ENGINEERS + LANDSCAPE ARCHITECTS:

Cashin Associates, P.C.
ENGINEERING - PLANNING - ENVIRONMENTAL - CONSTRUCTION MANAGEMENT

LANDSCAPE ARCHITECTS:

MATRIXNEWORLD
Engineering Program
Matrix New World Engineering, Land Surveying
and Landscape Architecture, P.C.
442 State Route 35, Second Floor
Eatontown, New Jersey 07724
Tel: 732-389-2999
Fax: 973-240-1818
WBE / DBE / SBE
www.matrixnewworld.com
NEW JERSEY CERTIFICATE OF AUTHORIZATION No. 24GA27982000

SEAL

"ALTERATION OF THIS DOCUMENT EXCEPT BY A LICENSED PROFESSIONAL IS ILLEGAL"

THESE DOCUMENTS CONTAIN POTENTIALLY SENSITIVE INFORMATION AND SHALL BE USED FOR THEIR INTENDED PURPOSE. ONCE THE INTENDED PURPOSE HAS CEASED, THE DOCUMENTS SHALL BE DESTROYED IN A SECURE MANNER.

IT IS A VIOLATION OF STATE EDUCATION LAW FOR ANY PERSON, UNLESS UNDER THE DIRECTION OF A LICENSED ARCHITECT TO ALTER THIS DOCUMENT IN ANYWAY. ALTERATIONS MUST HAVE THE SEAL AFFIXED ALONG WITH A DESCRIPTION OF THE ALTERATIONS, DATE AND ARCHITECT'S SIGNATURE. COPYRIGHT © 2012

PHASE
90% SUBMISSION

Revisions

Number	Description	Date:
1		
2		
3		
4		
5		

Project Title

HEMPSTEAD LAKE STATE PARK

CONTRACT
NYSP
WORK ORDER: LI-022
CONTRACT: D004472
COA: 1290350/30377/33001/ PRK 4559

PROJECT #: NYSP-1503
DATE: JULY 2017
DESIGNED BY:
DRAWN BY:
CHECKED BY:
REVIEWED BY:

SHEET TITLE
WINDOW DETAILS

SHEET #
A11.1

M:\cadd\NYSP\1503\Con-docs\arch\A11.1 - Window Details.dwg Last Modified: Jul 19, 2017 - 1:28pm Plotted on: Jul 19, 2017 - 1:34pm By aconcepcion

ROOM FINISH SCHEDULE

LEVEL	ROOM NO.	ROOM NAME	FLOOR		WALLS								CEILING		REMARKS
					EAST		NORTH		WEST		SOUTH				
			MAT'L	BASE	MAT'L	FINISH	MAT'L	FINISH	MAT'L	FINISH	MAT'L	FINISH	MAT'L	FINISH	
BASEMENT	B01	STORAGE ROOM	CONC	RUB	GWB	PT	GWB	PT	GWB	PT	GWB	PT	EXP	PT	
	B02	STORAGE ROOM	CONC	RUB	GWB	PT	GWB	PT	CONC	PT	GWB	PT	EXP	PT	
	B03	ELECTRICAL ROOM	CONC	RUB	GWB	PT	GWB	PT	CONC	PT	GWB	PT	EXP	PT	
	B04	MECHANICAL ROOM	CONC	RUB	GWB	PT	GWB	PT	CONC	PT	GWB	PT	EXP	PT	
FIRST FLOOR	101	VESTIBULE	WOM	MTL	GWB / A & G	PT / PRE	GWB	PT	GWB	PT	GWB / LAM	PT / -	MP	PRE	ENCASED COLUMNS - GWB
	102	HALL	RUF	MTL	GWB	PT	GWB	PT	GWB	PT	GWB	PT	GWB	PT	
	103	MEN'S BATHROOM	PP	CT	CT	-	CT	-	CT	-	CT	-	MR-GWB	PT	
	104	JANITOR'S CLOSET	PP	CT	CT	-	CT	-	CT	-	CT	-	MR-GWB	PT	
	105	FAMILY BATHROOM	PP	CT	CT	-	CT	-	CT	-	CT	-	MR-GWB	PT	
	106	WOMEN'S BATHROOM	PP	CT	CT	-	CT	-	CT	-	CT	-	MR-GWB	PT	
	107	MULTI-PURPOSE ROOM	CPT	MTL	GWB	PT	GWB	PT	GWB	PT	BB	PRE	ACP	-	
	107A	CLOSET	CPT	CPT	GWB	PT	GWB	PT	GWB	PT	GWB	PT	GWB	PT	
	107B	CLOSET	CPT	CPT	GWB	PT	GWB	PT	GWB	PT	GWB	PT	GWB	PT	
	107C	WET LAB	PP	CT	CT / MR GWB	- / PT	CT / MR GWB	- / PT	MR GWB	PT	CT / MR-GWB	- / PT	MR GWB	PT	CT - 3 SIDES 4'-10" A.F.F. - REFER TO D/A9.0
	108	KITCHENETTE / WET LAB	RUF	MTL	MR-GWB	PT	MR-GWB	PT	CT / MR-GWB	- / PT	CT / MR-GWB	- / PT	MR-GWB	PT	CT BACKSPLASH AND SIDESPLASH BETWEEN CABINETS - REFER TO A/A9.0 AND C/A9.0
	109	STAIR LOBBY	RUF	MTL	GWB	PT	GWB	PT	GWB	PT	GWB	PT	GWB	PT	
	110	STORAGE	CPT	CPT	GWB	PT	GWB	PT	GWB	PT	GWB	PT	ACP	-	
	111	MONITOR AND CONTROL ROOM	CPT	CPT	GWB	PT	GWB	PT	GWB	PT	GWB	PT	ACP	-	
	112	CONFERENCE ROOM	CPT	CPT	GWB	PT	GWB	PT	GWB	PT	GWB	PT	ACP	-	
	113	HALLWAY	CPT	CPT	GWB	PT	GWB	PT	GWB	PT	GWB	PT	ACP	-	
	113A	CLOSET	CPT	CPT	GWB	PT	GWB	PT	GWB	PT	GWB	PT	GWB	PT	
	114	INFORMATION AREA	CPT	CPT	-	-	GWB / A & G	PT / PRE	GWB / LAM	PT / -	GWB / LAM	PT / -	MP	PRE	ENCASED COLUMNS - GWB
	115	LOBBY	RUF	MTL	-	-	GWB	PT	GWB / LAM	PT	GWB	PT	GWB	PT	ENCASED COLUMNS - GWB
	116	MULTI-PURPOSE ROOM	RUF	MTL	GWB / A & G	PT / PRE	GWB	PT	-	-	-	-	GWB	PT	
	117	OVERLOOK DECK (EXTERIOR)	IPE	-	-	-	-	-	-	-	-	-	MP	PRE	
	-	STAIR 'A'	RUB	RUB	GWB	PT	GWB	PT	GWB	PT	GWB	PT	GWB	PT	WOM AT STAIR LANDING - COORDINATE SLAB RECESS AS REQUIRED

GENERAL FINISH NOTES:

1. ALL INTERIOR FINISHES ARE TO MEET OR EXCEED THE REQUIREMENTS OF NYSCRR PARTS 771&772.
2. SEE RCP PLANS FOR CEILING HEIGHTS, SOFFITS, AND ACT TYPES.
3. THIS SCHEDULE SERVES AS A GENERAL LIST OF FINISH ITEMS AND IS NOT A LIST OF ALL FINISH ITEMS WITHIN A ROOM OR SPACE. REFER TO ALL CONTRACT DOCUMENTS DRAWINGS AND SPECIFICATIONS TO DETERMINE ALL REQUIRED FINISHES AND FINISH ITEMS.
4. MOISTURE RESISTANT GWB TO BE INSTALLED IN JANITOR'S CLOSETS, KITCHEN, AND BATHROOMS.
5. CEMENT BOARD TO BE INSTALLED BEHIND ALL TILED WALLS.

ABBREVIATIONS:

ACP	=	ACOUSTICAL CEILING PANELS	LAM	=	LAMINATED CABINETRY
A & G	=	ALUMINUM AND GLASS STOREFRONT	MP	=	METAL PANELS
BB	=	BULLETIN BOARD	MR	=	MOISTURE RESISTANT
CB	=	CEMENT BOARD	MTL	=	METAL
CPT	=	CARPET TILE	PP	=	PORCELAIN PAVERS
CONC	=	CONCRETE (PROVIDE CLEAR SEALER U.N.O.)	PRE	=	PRE-FINISHED
CT	=	CERAMIC TILE	PT	=	PAINT
EXP	=	EXPOSED STRUCTURE	RUF	=	RESILIENT URETHANE FLOORING
GWB	=	GYPSUM WALL BOARD	RS	=	RUBBER STAIR TREADS AND LANDINGS
HM	=	HOLLOW METAL	WOM	=	WALK-OFF RECESSED MAT
IPE	=	IPE DECKING	WCP	=	WOOD CEILING PANELS

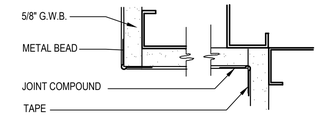

CORNERS

NOTE: CASING BEAD REQUIRED AT ALL EXPOSED CORNERS OR END OF PANELS

ABUTTING CONCRETE

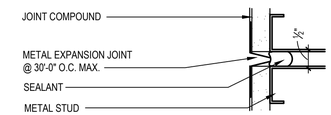

EXPANSION JOINT

1 Gypsum Wall Board Details

NOT TO SCALE

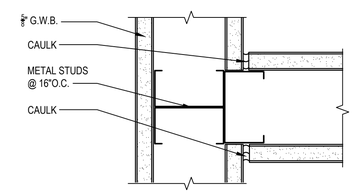

2 Typical Partition Intersection

SCALE: 3"=1'-0"

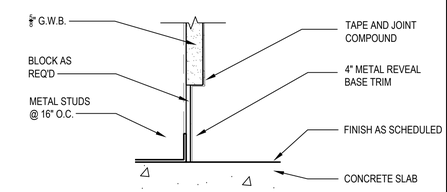

3 Typical Metal Base Detail

SCALE: 3"=1'-0"

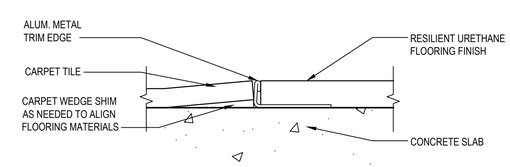

4 Floor Transition Detail

SCALE: 1'-0"=1'-0"

PROGRAM CONSULTANT:

Living with the BAY

CLIENTS:

NEW YORK STATE OF OPPORTUNITY. Parks, Recreation and Historic Preservation

Governor's Office of Storm Recovery

PROJECT MANAGER:

Stantec

LEAD LANDSCAPE ARCHITECTS + ARCHITECTS:

H2M architects + engineers
538 Broad Hollow Road
4th Floor East
Melville, NY 11747
P:(631)756-8000
F:(631)694-4122

CERTIFIED ARBORISTS + LANDSCAPE ARCHITECTS:

CHENEY DESIGN LA & PC LANDSCAPE ARCHITECTURE PC

STRUCTURAL ENGINEERS:

LKB CONSULTING ENGINEERS

CIVIL ENGINEERS + LANDSCAPE ARCHITECTS:

Cashin Associates, P.C. ENGINEERING - PLANNING - CONSTRUCTION MANAGEMENT

LANDSCAPE ARCHITECTS:

MATRIXNEWORLD Engineering Program
Matrix New World Engineering, Land Surveying
and Landscape Architecture, P.C.
442 State Route 35, Second Floor
Eatontown, New Jersey 07724
Tel: 732-389-2999
Fax: 973-240-1818
WBE / DBE / SBE
www.matrixneworld.com
NEW JERSEY CERTIFICATE OF AUTHORIZATION No. 24GA27982000

SEAL

"ALTERATION OF THIS DOCUMENT EXCEPT BY A LICENSED PROFESSIONAL IS ILLEGAL"

THESE DOCUMENTS CONTAIN POTENTIALLY SENSITIVE INFORMATION AND SHALL BE USED FOR THEIR INTENDED PURPOSE. ONCE THE INTENDED PURPOSE HAS CEASED, THE DOCUMENTS SHALL BE DESTROYED IN A SECURE MANNER.

IT IS A VIOLATION OF STATE EDUCATION LAW FOR ANY PERSON, UNLESS UNDER THE DIRECTION OF A LICENSED ARCHITECT TO ALTER THIS DOCUMENT IN ANYWAY. ALTERATIONS MUST HAVE THE SEAL AFFIXED ALONG WITH A DESCRIPTION OF THE ALTERATIONS, DATE AND ARCHITECT'S SIGNATURE. COPYRIGHT © 2012

PHASE
90% SUBMISSION

Revisions

Number	Description	Date:
1		
2		
3		
4		
5		

Project Title

HEMPSTEAD LAKE STATE PARK

CONTRACT
NYSP
WORK ORDER: LI-022
CONTRACT: D004472
COA: 1290350/30377/33001/ PRK 4559

PROJECT #: NYSP-1503
DATE: JULY 2017
DESIGNED BY: ACP
DRAWN BY: ALC
CHECKED BY:
REVIEWED BY:

SHEET TITLE

FINISH SCHEDULE AND DETAILS

SHEET # **A12.0**

M:\cadd\NYSP\1503\Con-docs\arch\A12.0 - Finish Schedule.dwg Last Modified: Jul 18, 2017 - 8:07pm Plotted on: Jul 18, 2017 - 8:07pm By aconcepcion

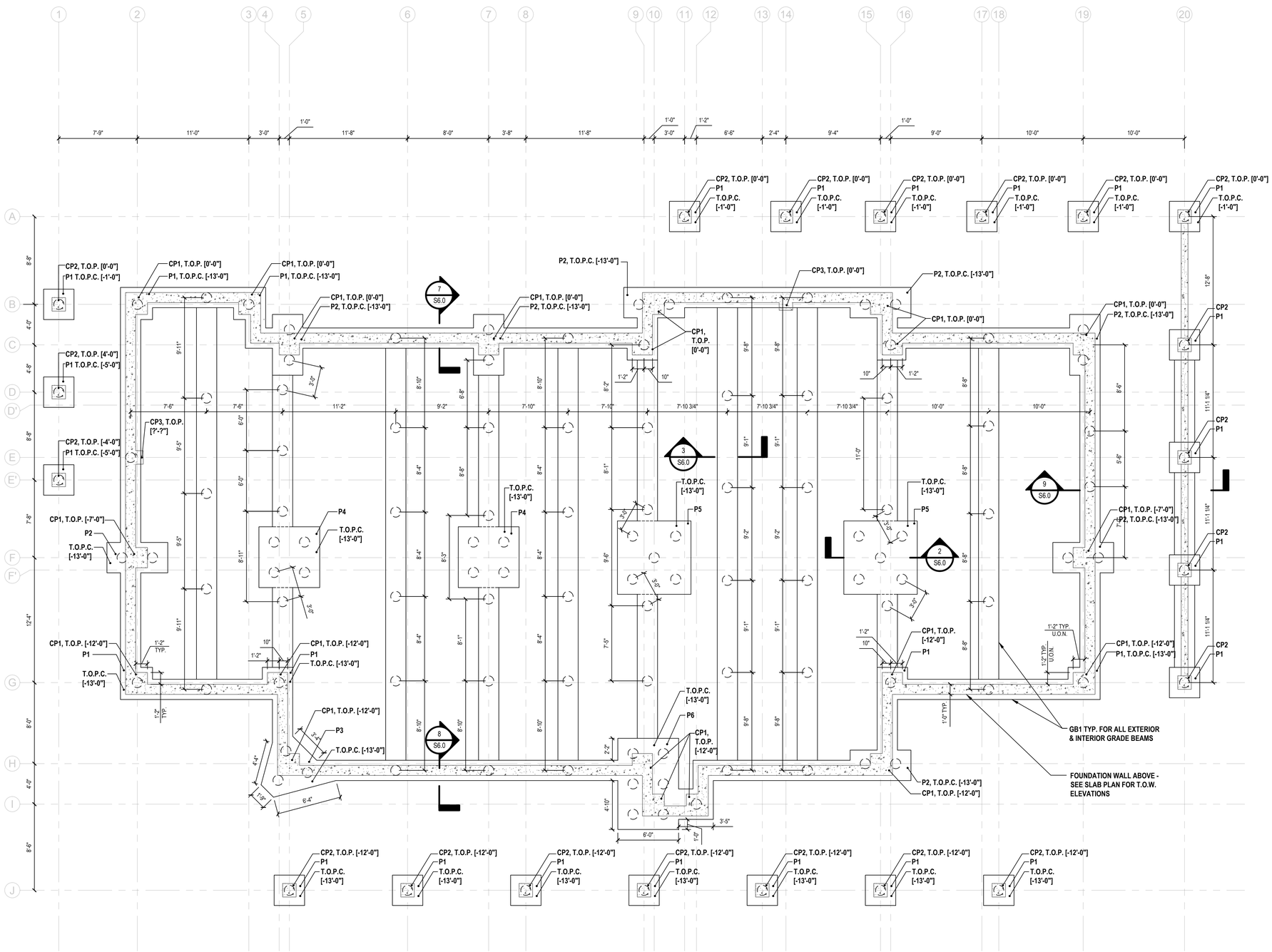

Foundation Plan

SCALE: 3/16"=1'-0"

LEGEND

T.O.W.	= TOP OF WALL
T.O.P.	= TOP OF PEDESTAL
P #	= PILE CAP DESIGNATION
T.O.P.C.	= TOP OF PILE CAP
C.P.#	= PEDESTAL DESIGNATION
U.O.N.	= UNLESS OTHERWISE NOTED
GB#	= GRADE BEAM DESIGNATION
◌	= 12" Ø TIMBER PILE, 30'-0" ASSUMED DEPTH TO ACHIEVE 20KIP ALLOWABLE CAPACITY

DESIGN CRITERIA:

ALL DESIGN LOADS ARE IN ACCORDANCE WITH 2016 BC-NYS AND ASCE 7-10 STRUCTURAL OCCUPANCY (RISK) CATEGORY III

1. BUILDING DESIGN LOADS

ROOF DEAD LOAD:	20 PSF
ROOF LIVE LOAD:	20 PSF
FIRST FLOOR DEAD LOAD:	50 PSF
FIRST FLOOR LIVE LOAD (CORRIDORS):	100 PSF
FIRST FLOOR LIVE LOAD (OFFICES):	50 PSF
BASEMENT COLLATERAL DEAD LOAD:	5 PSF
BASEMENT LIVE LOAD	100 PSF

2. SNOW LOADS

GROUND SNOW LOAD:	Pg = 25 PSF
EXPOSURE FACTOR:	Ce = 1.0
THERMAL FACTOR:	Ct = 1.0
IMPORTANCE FACTOR:	Is = 1.1
FLAT ROOF SNOW LOAD:	Pf = 22 PSF

3. WIND LOADS:

BASIC WIND SPEED:	130 MPH
EXPOSURE:	B
EXPOSURE ADJUSTMENT FACTOR:	1.0
INTERNAL PRESSURE COEFFICIENT:	Gcp = ±0.18 (ENCLOSED BLDG)

	EXPOSURE B WIND LOADS		EXPOSURE ADJUSTMENT COEFFICIENT		ASD DESIGN WIND LOADS
MWFRS WALL (END ZONE)	26.8 PSF	x	1.0	=	26.8 PSF
MWFRS WALL (INT. ZONE)	17.8 PSF	x	1.0	=	17.8 PSF
MWFRS ROOF (END ZONE)	-13.9 PSF	x	1.0	=	-13.9 PSF
MWFRS ROOF (INT. ZONE)	-8.2 PSF	x	1.0	=	-8.2 PSF
MWFRS ROOF (UPLIFT)	-32.2 PSF	x	1.0	=	-32.2 PSF

4. SEISMIC CRITERIA:

SITE CLASS: D

IMPORTANCE FACTOR	Ie = 1.25
Ss = 0.25g	S1 = 0.073g
Fa = 1.6	Fv = 2.4
Sms = 0.40g	Sm1 = 0.1752g
Sds = 0.27g	Sd1 = 0.1168g

SEISMIC DESIGN CATEGORY: B

EQUIVALENT LATERAL FORCE ANALYSIS PROCEDURE

SEISMIC LATERAL FORCE RESISTING SYSTEM:
STEEL SYSTEMS NOT SPECIFICALLY DETAILED FOR SEISMIC RESISTANCE: R = 3.0
SEISMIC RESPONSE COEFFICIENT: Cs = 0.115
TOTAL BASE SHEAR: V = 46.08 KIPS

5. ANY BUILDING COMPONENTS NOTED AS DELEGATED DESIGN ITEMS IN DRAWINGS AND/OR SPECIFICATIONS SHALL BE DESIGNED IN ACCORDANCE WITH MINIMUM LOADS SPECIFIED ABOVE. ANY DEVIATION FROM NOTED LOAD VALUES SHALL BE SUBMITTED BY CONTRACTOR FOR REVIEW AND APPROVAL TO EOR PRIOR TO SUBMITTING SHOP DRAWINGS AND CALCULATIONS.

FOUNDATION NOTES:

1. ELEVATIONS SHOWN THUS [ ] ARE RELATIVE TO FINISHED FIRST FLOOR ELEVATION [0'-0"].
2. ALL EXCAVATED EARTH SHALL BE REPLACED WITH TYPE 'C' CONTROLLED FILL, WHERE SHOWN IN SECTION, AS PER SPECIFICATION SECTION 312323.13.
3. CONTRACTOR SHALL COORDINATE SIZE AND LOCATIONS OF ALL REQUIRED PIPING AND CONDUIT PENETRATIONS THROUGH FOUNDATION WALL WITH ALL OTHER TRADES. PROVIDE PIPE SLEEVES AND REINFORCEMENT AROUND PENETRATIONS AS PER DETAILS 5 AND 6 ON SHEET S6.0.
4. REFER TO 'A' DRAWINGS FOR WATERPROOFING REQUIREMENTS.
5. ALL CONCRETE PEDESTALS SHALL BE CENTERED ON THE COLUMN LINES UNLESS OTHERWISE NOTED.
6. ALL CONCRETE PEDESTALS SHALL BE SIZED AS SHOWN IN THE COLUMN PIER SCHEDULE ON S5.0 AND CONSTRUCTED AS PER DETAIL 1/S6.0 UNLESS OTHERWISE NOTED.
7. REFER TO 'PILE CAP SCHEDULE' ON DRAWING S5.0 FOR SIZES & REINFORCEMENT REQUIREMENTS.
8. ALL PILE CAPS CENTERED ON COLUMN LINES U.O.N.

PROGRAM CONSULTANT:
Living with the BAY

CLIENTS:
NEW YORK STATE OF OPPORTUNITY Parks, Recreation and Historic Preservation
Governor's Office of Storm Recovery

PROJECT MANAGER:
Stantec

LEAD LANDSCAPE ARCHITECTS + ARCHITECTS:
H2M architects + engineers
538 Broad Hollow Road
4th Floor East
Melville, NY 11747
P:(631)756-8000
F:(631)694-4122

CERTIFIED ARBORISTS + LANDSCAPE ARCHITECTS:
CHINEY DESIGN L.A.B PC LANDSCAPE ARCHITECTURE PC

STRUCTURAL ENGINEERS:
LKB CONSULTING ENGINEERS

CIVIL ENGINEERS + LANDSCAPE ARCHITECTS:
Cashin Associates, P.C.
ENGINEERING - PLANNING - CONSTRUCTION MANAGEMENT

LANDSCAPE ARCHITECTS:
MATRIXNEWORLD Engineering Program
Matrix New World Engineering, Land Surveying
Landscape Architecture, D.P.C.
442 State Route 35, Second Floor
Eatontown, New Jersey 07724
WBE / DBE / SBE
Tel: 732-389-2999
Fax: 973-240-1818
www.matrixnewworld.com
NEW JERSEY CERTIFICATE OF AUTHORIZATION No. 24GA27962000

SEAL

"ALTERATION OF THIS DOCUMENT EXCEPT BY A LICENSED PROFESSIONAL IS ILLEGAL"

THESE DOCUMENTS CONTAIN POTENTIALLY SENSITIVE INFORMATION AND SHALL BE USED FOR THEIR INTENDED PURPOSE. ONCE THE INTENDED PURPOSE HAS CEASED, THE DOCUMENTS SHALL BE DESTROYED IN A SECURE MANNER.

IT IS A VIOLATION OF STATE EDUCATION LAW FOR ANY PERSON, UNLESS UNDER THE DIRECTION OF A LICENSED ARCHITECT TO ALTER THIS DOCUMENT IN ANYWAY. ALTERATIONS MUST HAVE THE SEAL AFFIXED ALONG WITH A DESCRIPTION OF THE ALTERATIONS, DATE AND ARCHITECT'S SIGNATURE. COPYRIGHT © 2012

PHASE
90% SUBMISSION

Revisions

Number	Description	Date:
1		
2		
3		
4		
5		

Project Title

HEMPSTEAD LAKE STATE PARK

CONTRACT
NYSP
WORK ORDER: LI-022
CONTRACT: D004472
COA: 1290350/30377/33001/ PRK 4559

PROJECT #: NYSP-1503
DATE: JULY 2017
DESIGNED BY: MDH
DRAWN BY: MDH
CHECKED BY:
REVIEWED BY:

SHEET TITLE
FOUNDATION PLAN & DESIGN LOADS

SHEET #
S1.0

C:\Users\mhorberger\appdata\local\temp\AcPublish_8780\S1.0 rev.dwg Last Modified: Jul 21, 2017 - 11:30am Plotted on: Jul 21, 2017 - 11:33am By mhorberger

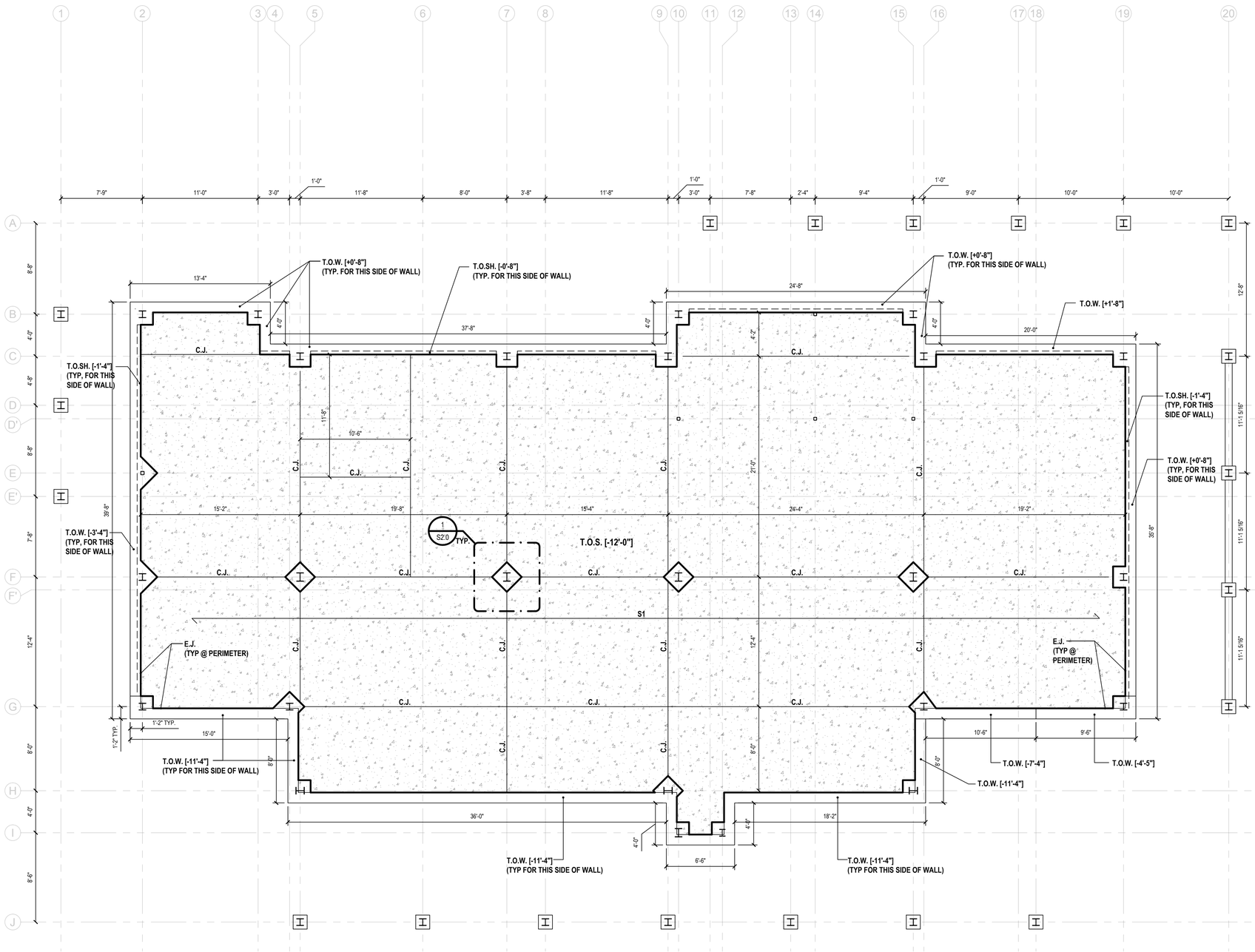

Basement Slab Plan

SCALE: 3/16"=1'-0"

LEGEND

T.O.S.	= TOP OF SLAB
T.O.SH.	= TOP OF SHELF
S.O.G.	= SLAB ON GRADE
C.J.	= CONTROL JOINT
E.J.	= EXPANSION JOINT
U.O.N.	= UNLESS OTHERWISE NOTED

SLAB NOTES:

1. ELEVATIONS SHOWN THUS [ ] ARE RELATIVE TO FINISHED FIRST FLOOR ELEVATION [0'-0"].
2. S1 INIDICATES 8" CONCRETE SLAB ON GRADE REINFORCED WITH #5 @ 12" O.C.
3. PROVIDE 1/2" PRE-MOLDED EXPANSION JOINT AROUND PERIMETER OF CONCRETE SLAB ON GRADE WHERE IT ABUTS THE FOUNDATION WALL OF THE BUILDING.

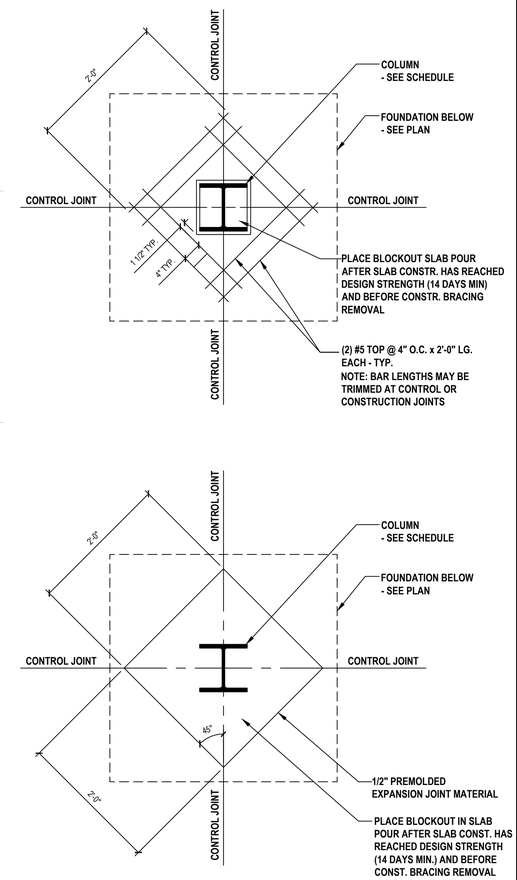

1 Column Expansion Joint Details

SCALE: N.T.S.

PROGRAM CONSULTANT:

Living with the BAY

CLIENTS:

NEW YORK STATE OF OPPORTUNITY Parks, Recreation and Historic Preservation

Governor's Office of Storm Recovery

PROJECT MANAGER:

Stantec

LEAD LANDSCAPE ARCHITECTS + ARCHITECTS:

H2M architects + engineers
538 Broad Hollow Road
4th Floor East
Melville, NY 11747
P:(631)756-8000
F:(631)694-4122

CERTIFIED ARBORISTS + LANDSCAPE ARCHITECTS:

CIBINEY DESIGN L.A.B.PC. LANDSCAPE ARCHITECTURE PC

STRUCTURAL ENGINEERS:

LKB CONSULTING ENGINEERS

CIVIL ENGINEERS + LANDSCAPE ARCHITECTS:

Cashin Associates, P.C. ENGINEERING - PLANNING - ENVIRONMENTAL - CONSTRUCTION MANAGEMENT

LANDSCAPE ARCHITECTS:

MATRIXNEWORLD Engineering Program
Matrix New World Engineering, Land Surveying and Landscape Architecture, P.C.
442 State Route 33, Second Floor
Ewing, New Jersey 08618
Tel: 732-569-2999
Fax: 973-240-1818
www.matrixnewworld.com
NEW JERSEY CERTIFICATE OF AUTHORIZATION No. 24GA27962000

SEAL

"ALTERATION OF THIS DOCUMENT EXCEPT BY A LICENSED PROFESSIONAL IS ILLEGAL"

THESE DOCUMENTS CONTAIN POTENTIALLY SENSITIVE INFORMATION AND SHALL BE USED FOR THEIR INTENDED PURPOSE. ONCE THE INTENDED PURPOSE HAS CEASED, THE DOCUMENTS SHALL BE DESTROYED IN A SECURE MANNER.

IT IS A VIOLATION OF STATE EDUCATION LAW FOR ANY PERSON, UNLESS UNDER THE DIRECTION OF A LICENSED ARCHITECT TO ALTER THIS DOCUMENT IN ANYWAY. ALTERATIONS MUST HAVE THE SEAL AFFIXED ALONG WITH A DESCRIPTION OF THE ALTERATIONS, DATE AND ARCHITECT'S SIGNATURE. COPYRIGHT © 2012

PHASE

90% SUBMISSION

Revisions

Number	Description	Date:
1		
2		
3		
4		
5		

Project Title

HEMPSTEAD LAKE STATE PARK

CONTRACT

NYSP
WORK ORDER: LI-022
CONTRACT: D004472
COA: 1290350/30377/33001/ PRK 4559

PROJECT #:	NYSP-1503
DATE:	JULY 2017
DESIGNED BY:	MDH
DRAWN BY:	MDH
CHECKED BY:	REVIEWED BY:

SHEET TITLE

BASEMENT SLAB PLAN

SHEET #

S2.0

M:\cadd\NYSP\1503\Cah-docs\structS2.0 rev.dwg Last Modified: Jul 21, 2017 - 11:30am Plotted on: Jul 21, 2017 - 11:33am By mhornberger

LEGEND

T.O.ST.	= TOP OF STEEL
T.O.S.	= TOP OF SLAB
E.O.D.	= EDGE OF DECK
U.O.N.	= UNLESS OTHERWISE NOTED

FRAMING NOTES:

1. ELEVATIONS SHOWN THUS [ ] ARE RELATIVE TO FINISHED FIRST FLOOR ELEVATION [0'-0"].
2. TOP OF STEEL SHALL BE SET AT [11'-8"] ABOVE FINISHED GROUND FLOOR ELEVATION, UNLESS OTHERWISE NOTED AS THUS [ ].
3. S2 — INDICATES SPAN OF 4" CONCRETE SLAB, REINFORCED WITH 6x6 - W2.9xW2.9 W.W.F. AND 1.5C 24GA METAL FORM DECK AS MANUFACTURED BY VULCRAFT NUCOR OR APPROVED EQUAL.
4. S3 — INDICATES SPAN OF 3 1/4" CONCRETE SLAB, REINFORCED WITH 6x6 - W2.9xW2.9 W.W.F. AND 1.0C 24GA METAL FORM DECK AS MANUFACTURED BY VULCRAFT NUCOR OR APPROVED EQUAL.
5. S4 — INDICATES SPAN OF WOOD IPE DECKING - SEE 'A' DWGS FOR MORE INFO
6. INSTALL BRIDGING FOR BAR JOISTS AS PER S.J.I. REQUIREMENTS.
7. INDICATES BEAM-TO-COLUMN MOMENT CONNECTION WITH THE NUMBER REPRESENTING THE A.S.D. MOMENT CAPACITY IN FT-KIPS.
8. STEEL CONNECTION PIECE DETAILS SHALL BE SUBMITTED WITH CALCULATIONS SIGNED AND SEALED BY A NEW YORK STATE LICENSED PROFESSIONAL ENGINEER. CONNECTION DESIGNER SHALL DESIGN ALL MOMENT CONNECTIONS AND SIMPLE SHEAR CONNECTIONS NOT SHOWN ON THE DRAWINGS. WHERE DESIGN SHEAR REACTION IS NOT LISTED ON DRAWINGS, IT SHALL BE DETERMINED BY THE CONNECTION DESIGNER AS THE MAXIMUM REACTION RESULTING FROM THE INDICATED BEAM SECTION BEING FULLY LOADED WITH MAXIMUM ALLOWABLE UNIFORM LOADS AS SPECIFIED IN AISC SPECIFICATION. WHERE AXIAL FORCE IN BEAMS IN NOT LISTED ON DRAWINGS, IT SHALL BE TAKEN AS 10 KIPS ASD. ALL CONNECTIONS SHALL BE DESIGNED CONSIDERING AXIAL, SHEAR AND MOMENT FORCES SIMULTANEOUSLY AS REQUIRED BY BUILDING CODE. SEE STRUCTURAL STEEL SPECIFICATION FOR ADDITIONAL LOADING DESIGN REQUIREMENTS.
9. EDGE OF ALL FLOOR SLABS SHALL BE INSTALLED WITH CONTINUOUS 12GA. POURSTOPS AND 20GA. CELL CLOSURES (WHERE APPLICABLE), UNLESS OTHERWISE SHOWN IN DETAIL.
10. PERIMETER LAYOUT OF STEEL FRAMING IS FOR FUTURE ELEVATOR INSTALLATION.

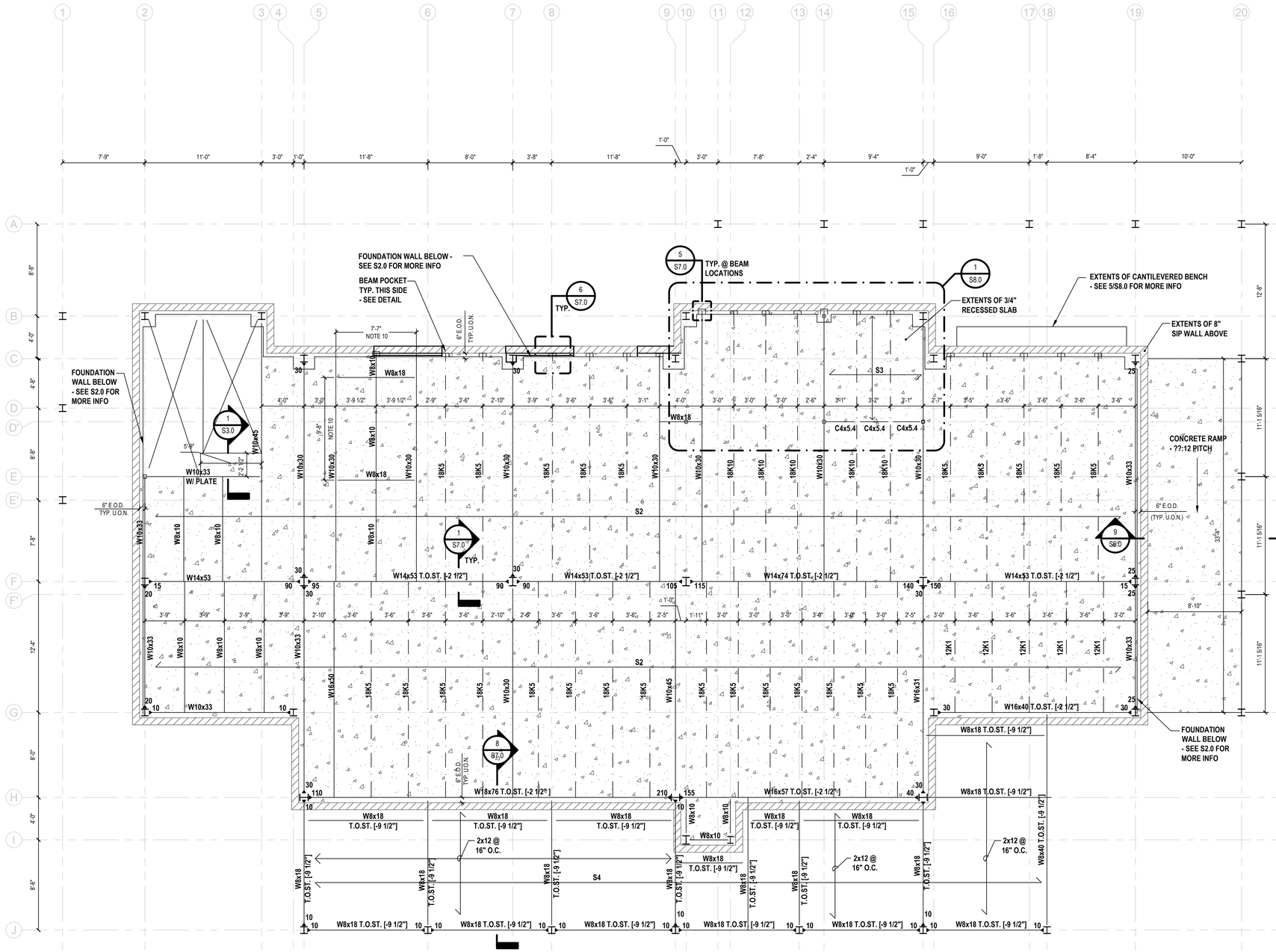

First Floor Framing Plan

SCALE: 3/16"=1'-0"

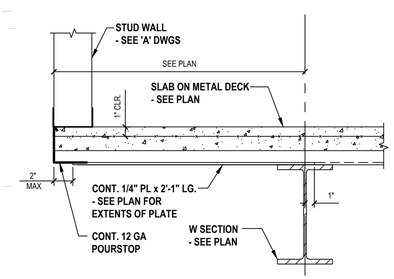

1 Edge of Decking Condition

SCALE: 1 1/2"=1'-0"

PROGRAM CONSULTANT:

Living with the BAY

CLIENTS:

NEW YORK STATE OF OPPORTUNITY Parks, Recreation and Historic Preservation

Governor's Office of Storm Recovery

PROJECT MANAGER:

Stantec

LEAD LANDSCAPE ARCHITECTS + ARCHITECTS:

H2M architects + engineers
538 Broad Hollow Road
4th Floor East
Melville, NY 11747
P:(631)756-8000
F:(631)694-4122

CERTIFIED ARBORISTS + LANDSCAPE ARCHITECTS:

CHINEY DESIGN LAB PC

STRUCTURAL ENGINEERS:

LKB CONSULTING ENGINEERS

CIVIL ENGINEERS + LANDSCAPE ARCHITECTS:

Cashin Associates, P.C.

LANDSCAPE ARCHITECTS:

MATRIXNEWORLD Engineering Program
Matrix New World Engineering, Land Surveying
and Landscape Architecture, P.C.
442 State Route 35, Second Floor
Eatontown, New Jersey 07724
Tel: 732-389-2999
Fax: 973-240-1818
WBE / SBE / SBE
www.matrixnewworld.com
NEW JERSEY CERTIFICATE OF AUTHORIZATION No. 24GA27960300

SEAL

"ALTERATION OF THIS DOCUMENT EXCEPT BY A LICENSED PROFESSIONAL IS ILLEGAL"

THESE DOCUMENTS CONTAIN POTENTIALLY SENSITIVE INFORMATION AND SHALL BE USED FOR THEIR INTENDED PURPOSE. ONCE THE INTENDED PURPOSE HAS CEASED, THE DOCUMENTS SHALL BE DESTROYED IN A SECURE MANNER.

IT IS A VIOLATION OF STATE EDUCATION LAW FOR ANY PERSON, UNLESS UNDER THE DIRECTION OF A LICENSED ARCHITECT TO ALTER THIS DOCUMENT IN ANYWAY. ALTERATIONS MUST HAVE THE SEAL AFFIXED ALONG WITH A DESCRIPTION OF THE ALTERATIONS, DATE AND ARCHITECT'S SIGNATURE. COPYRIGHT © 2012

PHASE

90% SUBMISSION

Revisions

Number	Description	Date:
1		
2		
3		
4		
5		

Project Title

HEMPSTEAD LAKE STATE PARK

CONTRACT

NYSP
WORK ORDER: LI-022
CONTRACT: D004472
COA: 1290350/30377/33001/ PRK 4559

PROJECT #: NYSP-1503

DATE: JULY 2017

DESIGNED BY: MDH

DRAWN BY: MDH

CHECKED BY:

REVIEWED BY:

SHEET TITLE

FIRST FLOOR FRAMING PLAN

SHEET #

S3.0

C:\Users\mhornberger\appdata\local\temp\AcPublish_8760\S3.0 rev.dwg Last Modified: Jul 21, 2017 - 11:32am Plotted on: Jul 21, 2017 - 11:34am By mhornberger

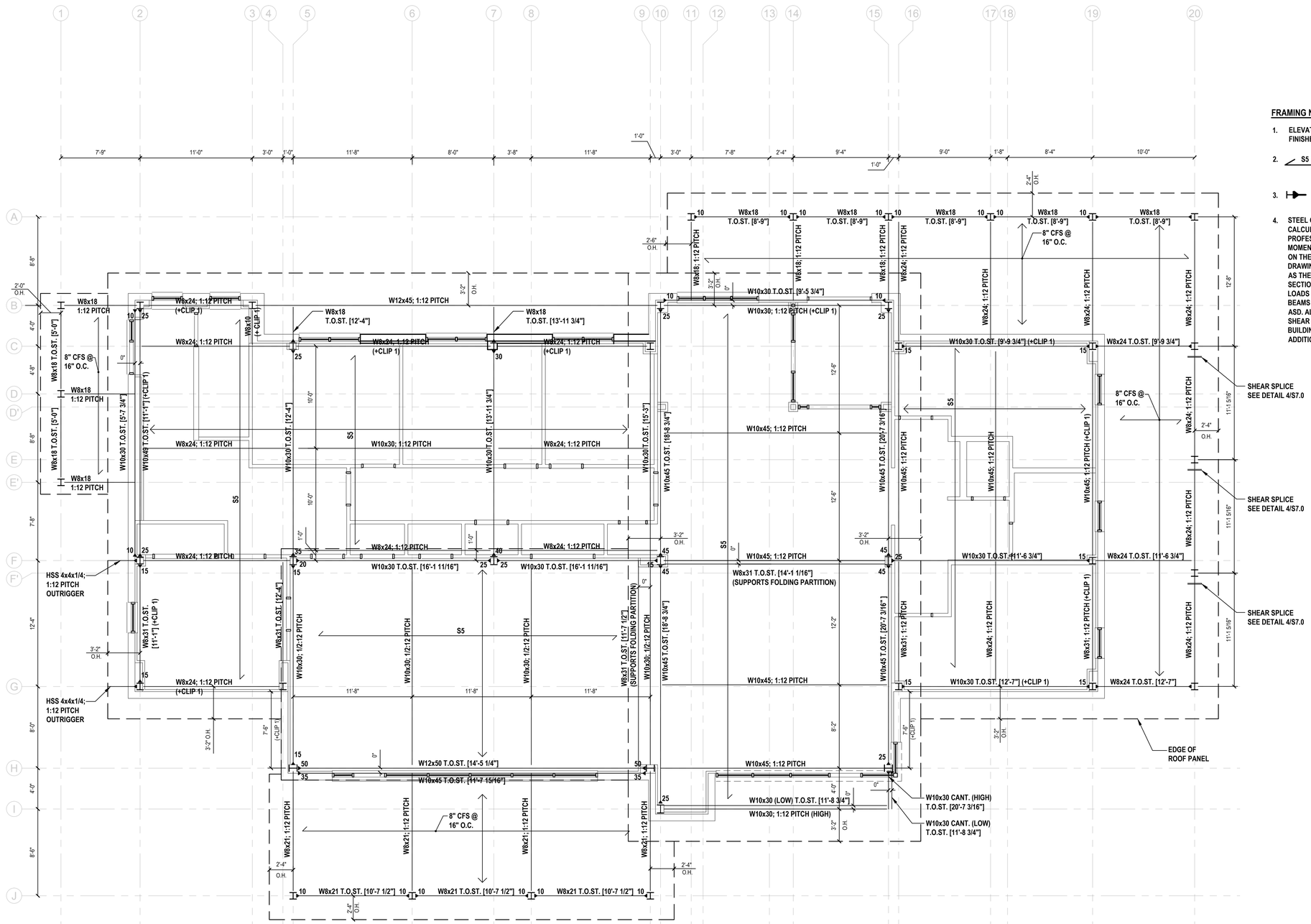

Roof Framing Plan

SCALE: 3/16"=1'-0"

LEGEND

T.O.ST.	= TOP OF STEEL
T.O.S.	= TOP OF SLAB
E.O.D.	= EDGE OF DECK
(+CLIP 1)	= CONT. HSS 4x2x1/4 WALL PANEL BRACE ATTACHED TO BEAM WITH L4x3 1/2x 1/2 @ 5'-0" O.C.
O.H.	= OVERHANG
U.O.N.	= UNLESS OTHERWISE NOTED

FRAMING NOTES:

1. ELEVATIONS SHOWN THUS [ ] ARE RELATIVE TO FINISHED FIRST FLOOR ELEVATION [0'-0"].
2. S5 — INDICATES SPAN OF 12" THICK SINGLE SPAN STRUCTURAL INSULATED PANELS, AS MANUFACTURED BY PERMATHERM OR APPROVED EQUAL
3. INDICATES BEAM-TO-COLUMN MOMENT CONNECTION WITH THE NUMBER REPRESENTING THE A.S.D. MOMENT CAPACITY IN FT-KIPS.
4. STEEL CONNECTION PIECE DETAILS SHALL BE SUBMITTED WITH CALCULATIONS SIGNED AND SEALED BY A NEW YORK STATE LICENSED PROFESSIONAL ENGINEER. CONNECTION DESIGNER SHALL DESIGN ALL MOMENT CONNECTIONS AND SIMPLE SHEAR CONNECTIONS NOT SHOWN ON THE DRAWINGS. WHERE DESIGN SHEAR REACTION IS NOT LISTED ON DRAWINGS, IT SHALL BE DETERMINED BY THE CONNECTION DESIGNER AS THE MAXIMUM REACTION RESULTING FROM THE INDICATED BEAM SECTION BEING FULLY LOADED WITH MAXIMUM ALLOWABLE UNIFORM LOADS AS SPECIFIED IN AISC SPECIFICATION. WHERE AXIAL FORCE IN BEAMS IN NOT LISTED ON DRAWINGS, IT SHALL BE TAKEN AS 10 KIPS ASD. ALL CONNECTIONS SHALL BE DESIGNED CONSIDERING AXIAL, SHEAR AND MOMENT FORCES SIMULTANEOUSLY AS REQUIRED BY BUILDING CODE. SEE STRUCTURAL STEEL SPECIFICATION FOR ADDITIONAL LOADING DESIGN REQUIREMENTS.

PROGRAM CONSULTANT:

Living with the BAY

CLIENTS:

NEW YORK STATE OF OPPORTUNITY. Parks, Recreation and Historic Preservation

Governor's Office of Storm Recovery

PROJECT MANAGER:

Stantec

LEAD LANDSCAPE ARCHITECTS + ARCHITECTS:

H2M architects + engineers
538 Broad Hollow Road
4th Floor East
Melville, NY 11747
P:(631)756-8000
F:(631)694-4122

CERTIFIED ARBORISTS + LANDSCAPE ARCHITECTS:

CRINEY CRISCH L.A.B.PC. LANDSCAPE ARCHITECTURE PC

STRUCTURAL ENGINEERS:

LKB CONSULTING ENGINEERS

CIVIL ENGINEERS + LANDSCAPE ARCHITECTS:

Cashin Associates, P.C. ENGINEERING - PLANNING - ENVIRONMENTAL - CONSTRUCTION MANAGEMENT

LANDSCAPE ARCHITECTS:

MATRIXNEWORLD Engineering Program

Matrix New World Engineering, Land Surveying
Matrix Environmental Group, P.C.
442 State Route 35, Second Floor
Eatontown, New Jersey 07724
WBE / DBE / SBE
Tel: 732-389-2999
Fax: 973-240-1818
www.matrixnewworld.com
NEW JERSEY CERTIFICATE OF AUTHORIZATION No. 24GA27962000

SEAL

"ALTERATION OF THIS DOCUMENT EXCEPT BY A LICENSED PROFESSIONAL IS ILLEGAL"

THESE DOCUMENTS CONTAIN POTENTIALLY SENSITIVE INFORMATION AND SHALL BE USED FOR THEIR INTENDED PURPOSE. ONCE THE INTENDED PURPOSE HAS CEASED, THE DOCUMENTS SHALL BE DESTROYED IN A SECURE MANNER.

IT IS A VIOLATION OF STATE EDUCATION LAW FOR ANY PERSON, UNLESS UNDER THE DIRECTION OF A LICENSED ARCHITECT TO ALTER THIS DOCUMENT IN ANYWAY. ALTERATIONS MUST HAVE THE SEAL AFFIXED ALONG WITH A DESCRIPTION OF THE ALTERATIONS, DATE AND ARCHITECT'S SIGNATURE. COPYRIGHT © 2012

PHASE

90% SUBMISSION

Revisions

Number	Description	Date:
1		
2		
3		
4		
5		

Project Title

HEMPSTEAD LAKE STATE PARK

CONTRACT

NYSP
WORK ORDER: LI-022
CONTRACT: D004472
COA: 1290350/30377/33001/ PRK 4559

PROJECT #:	NYSP-1503
DATE:	JULY 2017
DESIGNED BY:	MDH
DRAWN BY:	MDH
CHECKED BY:	REVIEWED BY:

SHEET TITLE

ROOF FRAMING PLAN

SHEET # **S4.0**

C:\Users\mhomberger\appdata\local\temp\AcPublish_9780\S4.0 rev.dwg Last Modified: Jul 21, 2017 - 11:32am Plotted on: Jul 21, 2017 - 11:33am By mhomberger

COLUMN SCHEDULE

COLUMN DESIGNATION	A						B					C						D	D'			E		E'	F					F'		G					H			I		J						
	11	14	15	17	19	20	1	2	3	10	15	5	7	9	16	19	20	1	10	14	15	2	20	1	2	5	7	10	15	19	20	2	4	16	19	20	5	9	15	10	12	5	6	8	9	13	15	18
1st FLOOR [0'-0"]	[8'-9"] W8x18	[8'-9"] W8x18	[8'-9"] W8x18	[8'-9"] W8x18	[8'-9"] W8x18	[8'-9"] W8x18	[5'-0"] W8x18	[11'-1"] W8x28	[12'-0"] W8x28	[18'-8 3/4"] W8x28	[20'-7 3/16"] W8x28	[12'-4"] W8x28	[13'-11 3/4"] W8x28	[15'-3"] W8x28	[9'-9 3/4"] W8x28	[9'-9 3/4"] W8x28	[9'-9 3/4"] W8x28	[5'-0"] W8x18	[10'-3"] HSS 4x4x1/2	[10'-3"] HSS 4x4x1/2	[10'-3"] HSS 4x4x1/2	HSS 5x5x1/2	[10'-8 3/4"] W8x28	[5'-0"] W8x18	[11'-1"] W8x28	[16'-1 11/16"] W10x39	[16'-1 11/16"] W10x39	[18'-8 3/4"] W10x39	[20'-7 3/16"] W10x39	[11'-6 3/4"] W8x28	[11'-8"] W8x28	[11'-1"] W8x28	[12'-4"] W8x28	[12'-7"] W8x28	[12'-7"] W8x28	[12'-7"] W8x28	[14'-5 1/4"] W10x45	[14'-5 1/4"] W10x45	[20'-7 3/16"] W10x45	[17'-9 3/16"] W10x45		[10'-7 1/2"] W8x28	[10'-7 1/2"] W8x28	[10'-7 1/2"] W8x28	[10'-7 1/2"] W8x28			
BASEMENT [-12'-0"]	[0'-0"]	[0'-0"]	[0'-0"]	[0'-0"]	[0'-0"]	[0'-0"]	[0'-0"]	[0'-0"]	[0'-0"]	[0'-0"]	[0'-0"]	[0'-0"]	[0'-0"]	[0'-0"]	[0'-0"]	[0'-0"]	[0'-0"]	[-4'-0"]	[0'-0"]	[0'-0"]	[0'-0"]	[-4'-0"]	[-4'-0"]	[-4'-0"]	[-7'-0"]	[-13'-0"]	[-13'-0"]	[-13'-0"]	[-13'-0"]	[-7'-0"]	[-7'-0"]	[-12'-0"]	[-12'-0"]	[-12'-0"]	[-12'-0"]	[-12'-0"]	[-12'-0"]	[-12'-0"]	[-12'-0"]	[-12'-0"]	[0'-0"] W8x28	[-12'-0"]	[-12'-0"]	[-12'-0"]	[-12'-0"]	[0'-0"] W8x28	[0'-0"] W8x28	[0'-0"] W8x28
BASE PLATE TYPE	BP1	BP1	BP1	BP1	BP1	BP1	BP1	BP1	BP1	BP1	BP1	BP2	BP2	BP2	BP3	BP1	BP1	BP1	3/S8	3/S8	3/S8	BP1	BP1	BP1	BP1	BP4	BP4	BP4	BP4	BP2	BP1	BP1	BP1	BP1	BP1	BP1	BP3	BP4	BP3	BP3	BP1	BP1	BP1	BP1	BP1	BP1	BP1	BP1
FOOTING TYPE	P1	P1	P1	P1	P1	P1	P1	P1	P1	P2	P2	P2	P2	P1	P1	P2	P1	P1	N/A	N/A	N/A	N/A	P1	P1	P2	P4	P4	P5	P5	P2	P1	P1	P1	P1	P1	P1	P3	P6	P2	P6	P6	P1	P1	P1	P1	P1	P1	P1

COLUMN SCHEDULE NOTES:

1. INDICATES TOP OF COLUMN/TOP PLATE
2. INDICATES BOTTOM OF BASE PLATE
3. SEE BASE PLATE DETAIL AND SCHEDULE TO DETERMINE BOTTOM OF COLUMN ELEVATION.
4. SEE "FOOTING SCHEDULE" FOR FOOTING SIZE AND REINFORCING.
5. ALL BASE PLATES TO BEAR ON CONCRETE SHALL BE SHIMMED USING 3/4" NON-METALLIC, NON-SHRINK GROUT.

BASE PLATE SCHEDULE

MARK	WIDTH 'W'	LENGTH 'L'	THICKNESS	NOTES	DETAIL
BP1	8"	10"	1/4"	1&2	3&4
BP2	8"	10"	3/8"	1&2	3
BP3	10"	12"	3/8"	1&2	3
BP4	10"	12"	1/2"	1&2	3

NOTES:

1. PROVIDE 3/4" Ø ASTM A307 ANCHOR BOLTS FOR NON-MOMENT BASE PLATE.
2. REFER TO BASE PLATE DETAILS 3/S5.0 & 4/S5.0 FOR ANCHOR BOLT LOCATIONS.

COLUMN PIER SCHEDULE

DESIGNATION	SIZE	REINFORCEMENT	TIES	LOCATIONS
CP1	26"x 26"	(3) #6 BARS E.F. - (8 BARS TOTAL)	#3 BARS @ 12" O.C.	SEE FND. PLAN
CP2	16"x 16"	(3) #6 BARS E.F. - (8 BARS TOTAL)	#3 BARS @ 12" O.C.	SEE FND. PLAN
CP3	16"x 21"	(3) #6 BARS E.F. - (8 BARS TOTAL)	#3 BARS @ 12" O.C.	SEE FND. PLAN

PILE CAP SCHEDULE

MARK	WIDTH 'W'	LENGTH 'L'	THICKNESS	REINFORCEMENT
P1	3'-0"	3'-0"	2'-0"	#5 @ 12" O.C. E.W. TOP #6 @ 12" O.C. E.W. BOTT.
P2	3'-0"	6'-0"	2'-0"	#5 @ 12" O.C. E.W. TOP #6 @ 12" O.C. E.W. BOTT.
P3	SEE PLAN	SEE PLAN	2'-0"	#5 @ 12" O.C. E.W. TOP #6 @ 6" O.C. E.W. BOTT.
P4	6'-0"	6'-0"	2'-0"	#5 @ 12" O.C. E.W. TOP #7 @ 6" O.C. E.W. BOTT.
P5	7'-3"	7'-3"	2'-0"	#5 @ 12" O.C. E.W. TOP #7 @ 6" O.C. E.W. BOTT.
P6	SEE PLAN	SEE PLAN	2'-0"	#5 @ 12" O.C. E.W. TOP #7 @ 6" O.C. E.W. BOTT.

CONCRETE BEAM SCHEDULE

MARK	DEPTH	WIDTH	REINFORCEMENT
GB1	24"	24"	(3) #4 BARS TOP, (3) #5 BARS BOTT.

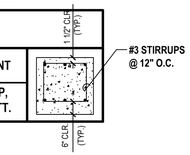

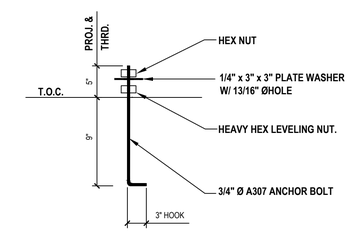

1 **Anchor Bolt Detail**
SCALE: N.T.S.

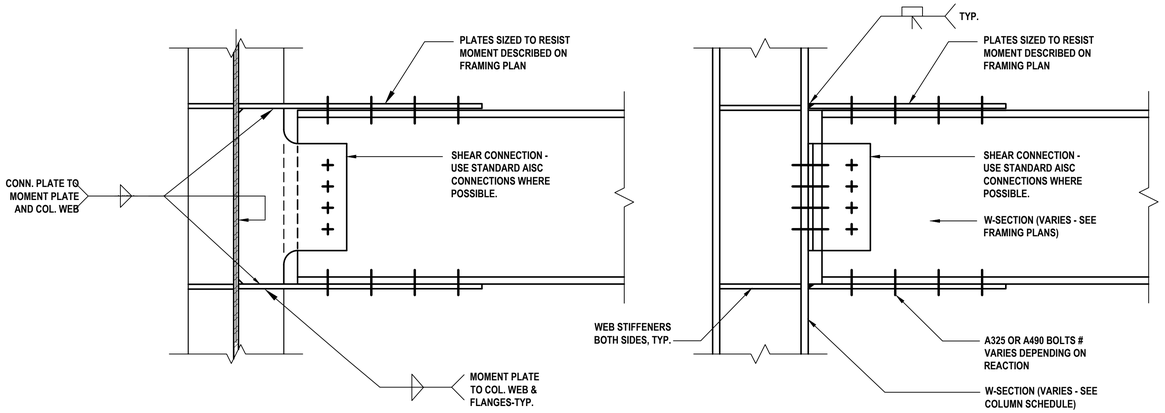

AT MINOR AXIS (My)

NOTE:
FOR INFO. NOT SHOWN SEE CONTITION AT MAJOR AXIS

NOTE:
STRUCTURAL STEEL FABRICATOR SHALL HAVE ALL CONNECTIONS NOT DETAILED ON DRAWINGS DESIGNED BY A LICENSED STRUCTURAL ENGINEER. STEEL SHOP DRAWINGS SHALL BEAR SIGNATURE AND SEAL OF SAID ENGINEER.

AT MAJOR AXIS (Mx)

2 **Typical Beam to Column Moment Connection**
SCALE: N.T.S.

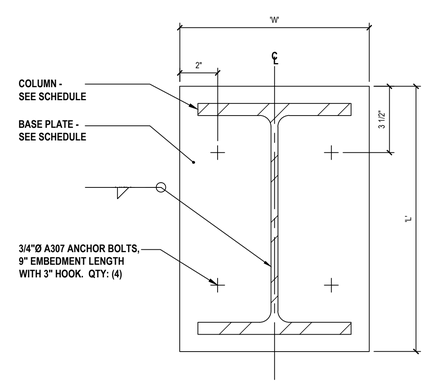

3 **Non-Moment Base Plate**
SCALE: N.T.S.

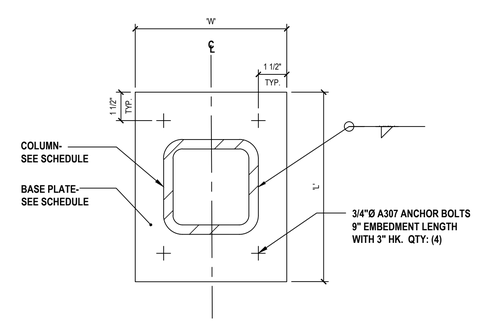

4 **Non-Moment Base Plate 2**
SCALE: N.T.S.

PROGRAM CONSULTANT:
Living with the BAY

CLIENTS:
NEW YORK STATE OF OPPORTUNITY Parks, Recreation and Historic Preservation
Governor's Office of Storm Recovery

PROJECT MANAGER:
Stantec

LEAD LANDSCAPE ARCHITECTS + ARCHITECTS:
H2M architects + engineers
538 Broad Hollow Road
4th Floor East
Melville, NY 11747
P:(631)756-8000
F:(631)694-4122

CERTIFIED ARBORISTS + LANDSCAPE ARCHITECTS:
CHENEY CRISCH LA & PC LANDSCAPE ARCHITECTURE PC

STRUCTURAL ENGINEERS:
LKB CONSULTING ENGINEERS

CIVIL ENGINEERS + LANDSCAPE ARCHITECTS:
Cashin Associates, P.C.
ENGINEERING - PLANNING - ENVIRONMENTAL - CONSTRUCTION MANAGEMENT

LANDSCAPE ARCHITECTS:
MATRIXNEWORLD Engineering Program
Matrix New World Engineering, Land Surveying
Landscape Architecture, D.P.C.
442 State Route 35, Second Floor
Eatontown, New Jersey 07724
MNE / SBE / SBE
Tel: 732-389-2999
Fax: 973-240-1818
www.matrixneworld.com
NEW JERSEY CERTIFICATE OF AUTHORIZATION No. 24GA27982000

SEAL

"ALTERATION OF THIS DOCUMENT EXCEPT BY A LICENSED PROFESSIONAL IS ILLEGAL"

THESE DOCUMENTS CONTAIN POTENTIALLY SENSITIVE INFORMATION AND SHALL BE USED FOR THEIR INTENDED PURPOSE. ONCE THE INTENDED PURPOSE HAS CEASED, THE DOCUMENTS SHALL BE DESTROYED IN A SECURE MANNER.

IT IS A VIOLATION OF STATE EDUCATION LAW FOR ANY PERSON, UNLESS UNDER THE DIRECTION OF A LICENSED ARCHITECT TO ALTER THIS DOCUMENT IN ANYWAY. ALTERATIONS MUST HAVE THE SEAL AFFIXED ALONG WITH A DESCRIPTION OF THE ALTERATIONS, DATE AND ARCHITECT'S SIGNATURE. COPYRIGHT © 2012

PHASE
90% SUBMISSION

Revisions

Number	Description	Date:
1		
2		
3		
4		
5		

Project Title

HEMPSTEAD LAKE STATE PARK

CONTRACT
NYSP
WORK ORDER: LI-022
CONTRACT: D004472
COA: 1290350/30377/33001/ PRK 4559

PROJECT #: NYSP-1503
DATE: JULY 2017
DESIGNED BY: MDH
DRAWN BY: MDH
CHECKED BY:
REVIEWED BY:

SHEET TITLE
COLUMN SCHEDULE & DETAILS

SHEET # **S5.0**

C:\Users\mhornberger\appdata\local\temp\AcPublish_3780\S5.0.dwg Last Modified: Jul 21, 2017 - 11:27am Plotted on: Jul 21, 2017 - 11:35am By mhornberger

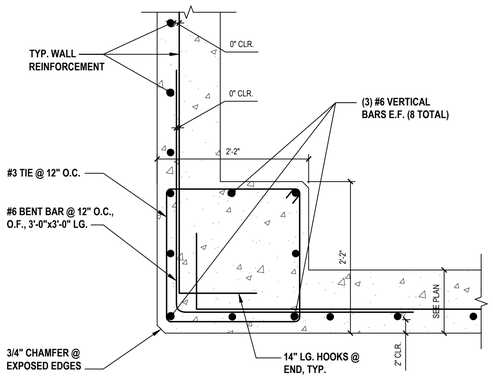

PLAN VIEW

NOTE:

1. CONDITION AT SINGLE LAYER OF WALL REINFORCEMENT SHOWN. DOUBLE LAYER REINFORCEMENT CONDITION SIMILAR. 3'-0" x 3'-0" LONG BENT BARS REQUIRED AT OUTSIDE FACE ONLY.

1 Typical Corner Pier/ Foundation Wall Intersection

SCALE: N.T.S.

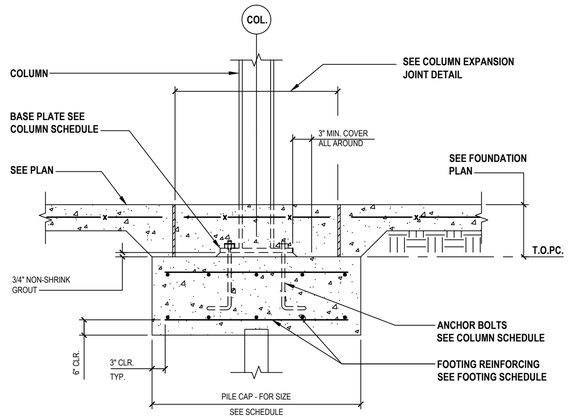

2 Typical Interior Pile Cap

SCALE: N.T.S.

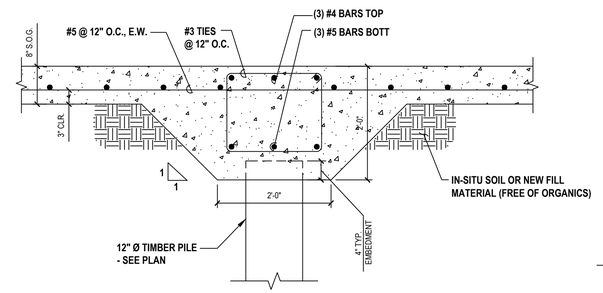

NOTE: EXTEND GRADE BEAM REINFORCING THRU PILE CAPS

3 Typical Interior Grade Beam Detail

SCALE: N.T.S.

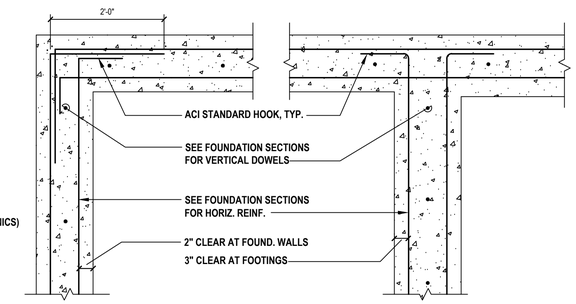

4 Typical Building Foundation Corner Detail

SCALE: N.T.S.

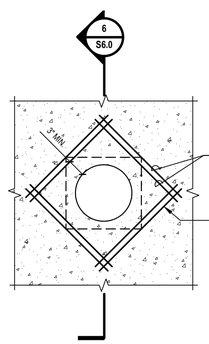

5 Typical Elevation of Wall/Slab Penetration

SCALE: N.T.S.

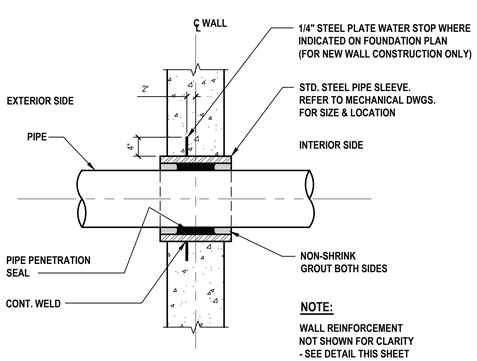

NOTE:

WALL REINFORCEMENT NOT SHOWN FOR CLARITY - SEE DETAIL THIS SHEET

6 Typical Section of Wall/Slab Penetration

SCALE: N.T.S.

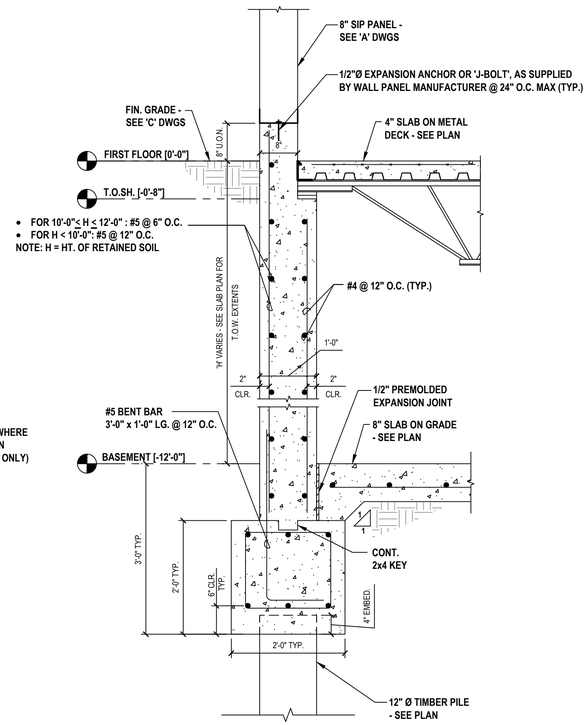

7 Typical Exterior Foundation Wall @ North End

SCALE: N.T.S.

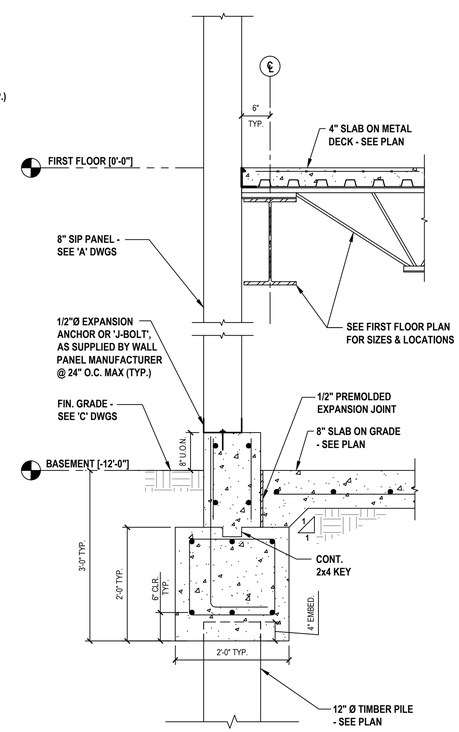

8 Typical Exterior Foundation Wall @ South End

SCALE: N.T.S.

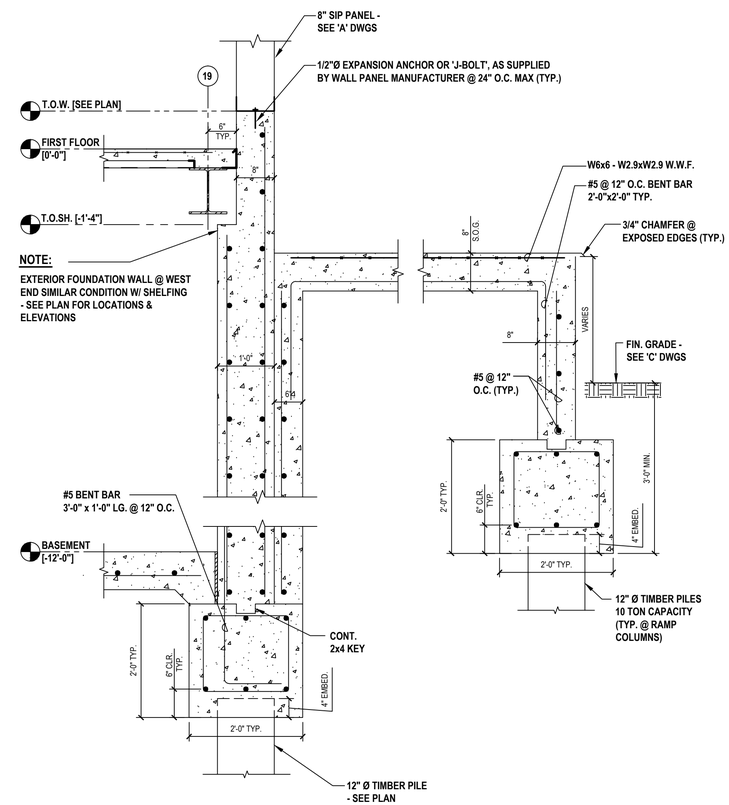

9 Section at Concrete Ramp @ East End

SCALE: N.T.S.

PROGRAM CONSULTANT:

Living with the BAY

CLIENTS:

NEW YORK STATE OF OPPORTUNITY. Parks, Recreation and Historic Preservation

Governor's Office of Storm Recovery

PROJECT MANAGER:

Stantec

LEAD LANDSCAPE ARCHITECTS + ARCHITECTS:

H2M architects + engineers
538 Broad Hollow Road
4th Floor East
Melville, NY 11747
P:(631)756-8000
F:(631)694-4122

CERTIFIED ARBORISTS + LANDSCAPE ARCHITECTS:

CIBINEY DESIGN L.A. & P.C. LANDSCAPE ARCHITECTURE PL

STRUCTURAL ENGINEERS:

LKB CONSULTING ENGINEERS

CIVIL ENGINEERS + LANDSCAPE ARCHITECTS:

Cashin Associates, P.C.
ENGINEERING - PLANNING - ENVIRONMENTAL - CONSTRUCTION MANAGEMENT

LANDSCAPE ARCHITECTS:

MATRIXNEWORLD Engineering Program
Matrix New World Engineering, Land Surveying
Landscape Architecture, D.P.C.
442 State Route 35, Second Floor
Eatontown, New Jersey 07724
Tel: 732-389-2999
Fax: 973-240-1818
WBE / DBE / SBE
www.matrixnewworld.com
NEW JERSEY CERTIFICATE OF AUTHORIZATION No. 24GA27982300

SEAL

"ALTERATION OF THIS DOCUMENT EXCEPT BY A LICENSED PROFESSIONAL IS ILLEGAL"

THESE DOCUMENTS CONTAIN POTENTIALLY SENSITIVE INFORMATION AND SHALL BE USED FOR THEIR INTENDED PURPOSE. ONCE THE INTENDED PURPOSE HAS CEASED, THE DOCUMENTS SHALL BE DESTROYED IN A SECURE MANNER.

IT IS A VIOLATION OF STATE EDUCATION LAW FOR ANY PERSON, UNLESS UNDER THE DIRECTION OF A LICENSED ARCHITECT TO ALTER THIS DOCUMENT IN ANYWAY. ALTERATIONS MUST HAVE THE SEAL AFFIXED ALONG WITH A DESCRIPTION OF THE ALTERATIONS, DATE AND ARCHITECT'S SIGNATURE. COPYRIGHT © 2012

PHASE
90% SUBMISSION

Revisions

Number	Description	Date:
1		
2		
3		
4		
5		

Project Title

HEMPSTEAD LAKE STATE PARK

CONTRACT
NYSP
WORK ORDER: LI-022
CONTRACT: D004472
COA: 1290350/30377/33001/ PRK 4559

PROJECT #: NYSP-1503
DATE: JULY 2017
DESIGNED BY: MDH
DRAWN BY: MDH
CHECKED BY:
REVIEWED BY:

SHEET TITLE
DETAILS

SHEET #
S6.0

C:\Users\mhornberger\appdata\local\temp\AcPublish_9780\S6.0.dwg Last Modified: Jul 20, 2017 - 12:07pm Plotted on: Jul 21, 2017 - 11:35am By mhornberger

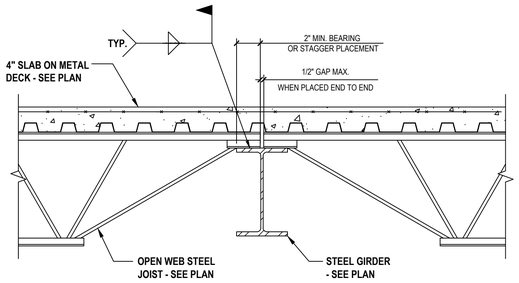

1 Typical Joist Bearing on Steel Girder
SCALE: N.T.S.

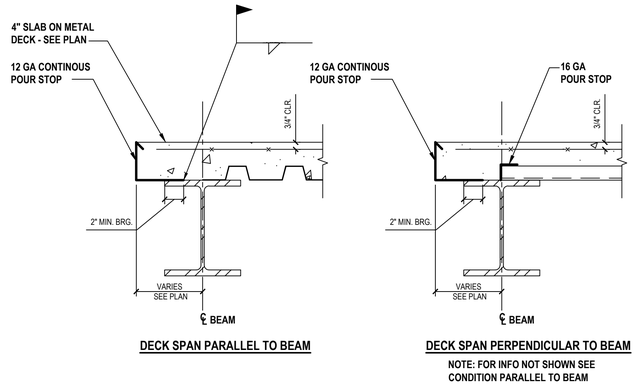

2 Typical Slab Opening Detail
SCALE: N.T.S.

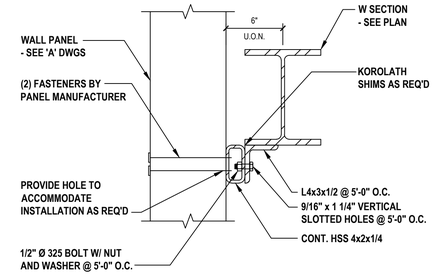

3 Wall Panel Brace Detail
SCALE: N.T.S.

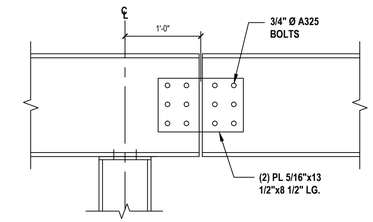

4 Typical Shear Splice Detail
SCALE: N.T.S.

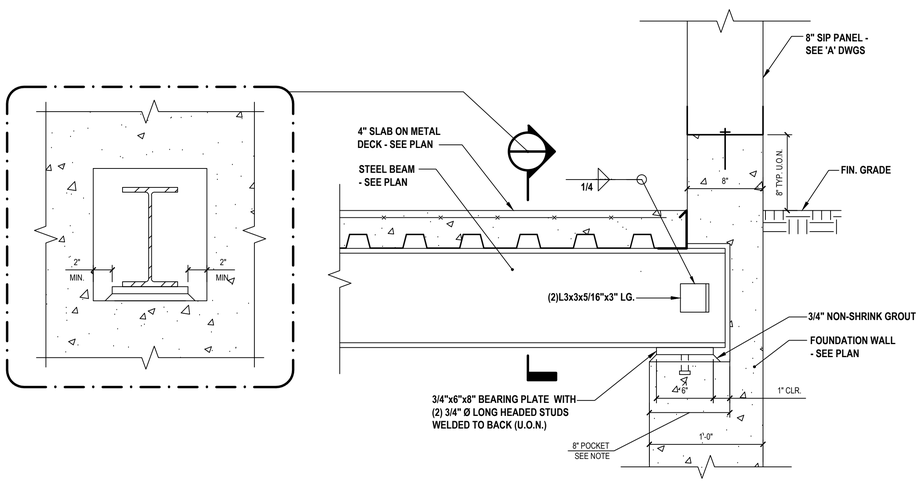

NOTE: FILL POCKET SOLID WITH MORTAR AFTER BEAM HAS BEEN INSTALLED

5 Typical Beam Pocket at Concrete Wall
SCALE: N.T.S.

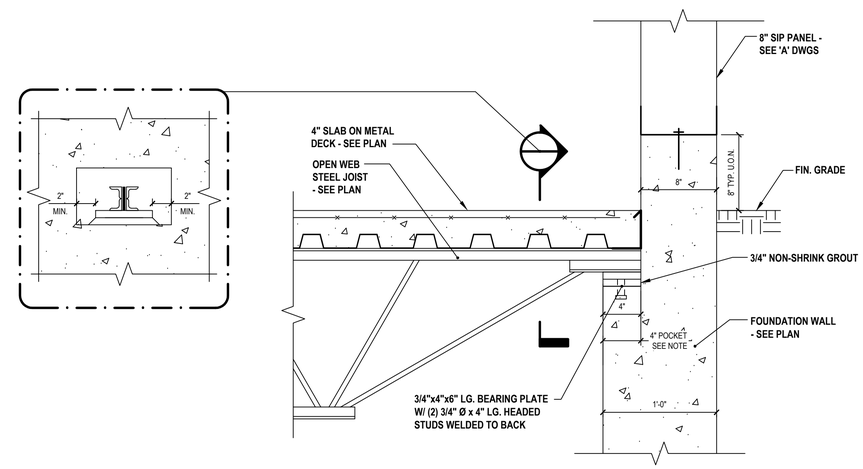

NOTE: FILL POCKET SOLID WITH MORTAR AFTER BEAM HAS BEEN INSTALLED

6 Typical Open Web Steel Joist Pocket at Concrete Wall
SCALE: N.T.S.

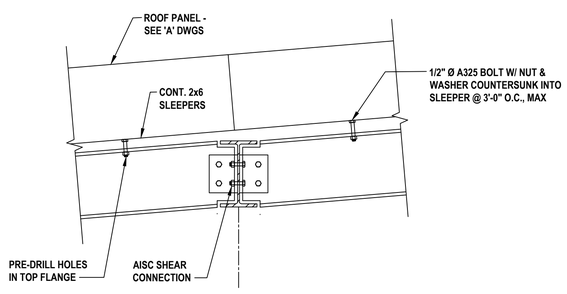

7 Pitched Beam to Beam Connection
SCALE: 1"=1'-0"

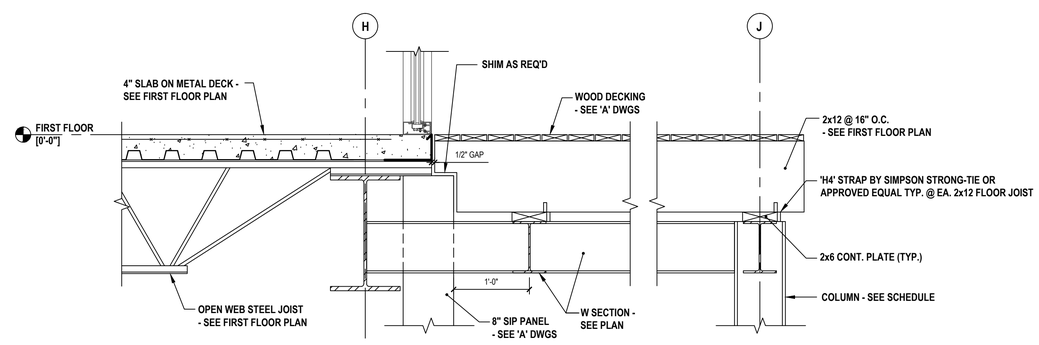

8 Transition From Concrete Slab to Wood Decking
SCALE: N.T.S.

PROGRAM CONSULTANT:

Living with the BAY

CLIENTS:

NEW YORK STATE OF OPPORTUNITY Parks, Recreation and Historic Preservation

Governor's Office of Storm Recovery

PROJECT MANAGER:

Stantec

LEAD LANDSCAPE ARCHITECTS + ARCHITECTS:

H2M architects + engineers
538 Broad Hollow Road
4th Floor East
Melville, NY 11747
P:(631)756-8000
F:(631)694-4122

CERTIFIED ARBORISTS + LANDSCAPE ARCHITECTS:

CIBINEY CRISCHI L.A.B PC LANDSCAPE ARCHITECTURE PC

STRUCTURAL ENGINEERS:

LKB CONSULTING ENGINEERS

CIVIL ENGINEERS + LANDSCAPE ARCHITECTS:

Cashin Associates, P.C.
ENGINEERING - PLANNING - ENVIRONMENTAL - CONSTRUCTION MANAGEMENT

LANDSCAPE ARCHITECTS:

MATRIXNEWORLD Engineering Program
Matrix New World Engineering, Land Surveying
and Landscape Architecture, P.C.
442 State Route 35, Second Floor
Eatontown, New Jersey 07724
WBE / DBE / SBE
NEW JERSEY CERTIFICATE OF AUTHORIZATION No. 24GA27982300
Tel: 732-389-2999
Fax: 973-240-1818
www.matrixnewworld.com

SEAL

"ALTERATION OF THIS DOCUMENT EXCEPT BY A LICENSED PROFESSIONAL IS ILLEGAL"

THESE DOCUMENTS CONTAIN POTENTIALLY SENSITIVE INFORMATION AND SHALL BE USED FOR THEIR INTENDED PURPOSE. ONCE THE INTENDED PURPOSE HAS CEASED, THE DOCUMENTS SHALL BE DESTROYED IN A SECURE MANNER.

IT IS A VIOLATION OF STATE EDUCATION LAW FOR ANY PERSON, UNLESS UNDER THE DIRECTION OF A LICENSED ARCHITECT TO ALTER THIS DOCUMENT IN ANYWAY. ALTERATIONS MUST HAVE THE SEAL AFFIXED ALONG WITH A DESCRIPTION OF THE ALTERATIONS, DATE AND ARCHITECT'S SIGNATURE. COPYRIGHT © 2012

PHASE
90% SUBMISSION

Revisions

Number	Description	Date:
1		
2		
3		
4		
5		

Project Title

HEMPSTEAD LAKE STATE PARK

CONTRACT
NYSP
WORK ORDER: LI-022
CONTRACT: D004472
COA: 1290350/30377/33001/
PRK 4559

PROJECT #: NYSP-1503
DATE: JULY 2017
DESIGNED BY: MDH
DRAWN BY: MDH
CHECKED BY:
REVIEWED BY:

SHEET TITLE
DETAILS

SHEET # **S7.0**

C:\Users\mhomberger\appdata\local\temp\AcPublish_8760\S7.0.dwg Last Modified: Jul 20, 2017 - 12:07pm Plotted on: Jul 21, 2017 - 11:36am By mhomberger

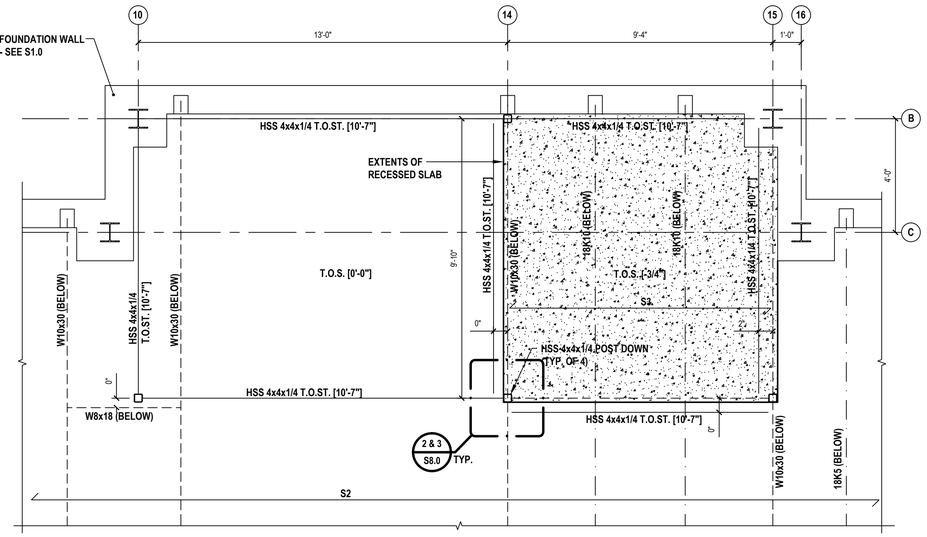

1 Entry Framing Plan at First Floor

SCALE: N.T.S.

NOTE:

1. ELEVATIONS SHOWN THUS [ ] ARE RELATIVE TO FINISHED FIRST FLOOR ELEVATION [0'-0"].
2. TOP OF STEEL SHALL BE SET AT [11'-8"] ABOVE FINISHED GROUND FLOOR ELEVATION, UNLESS OTHERWISE NOTED AS THUS [ ].

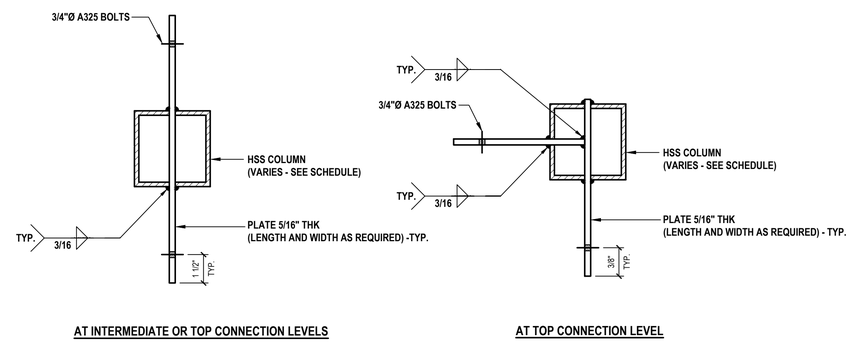

2 Shear Connections at HSS Steel Columns

SCALE: N.T.S.

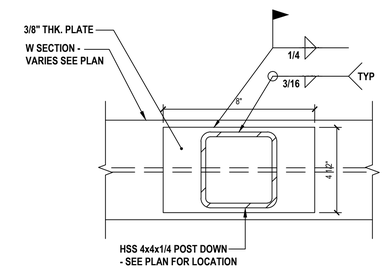

3 Typical HSS Post Down Connection onto Steel Beam

SCALE: N.T.S.

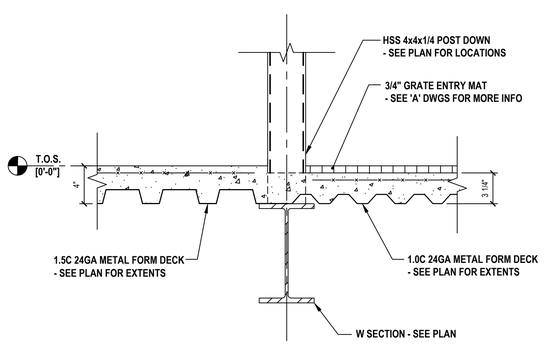

4 Section at Recessed Slab

SCALE: N.T.S.

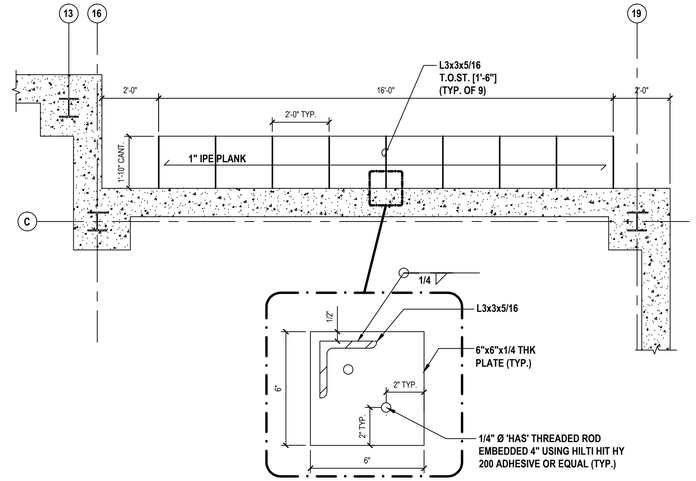

5 Cantilevered Bench Detail

SCALE: 3/8"=1'-0"

NOTE:

1. ELEVATIONS SHOWN THUS [ ] ARE RELATIVE TO FINISHED FIRST FLOOR ELEVATION [0'-0"].
2. SEE SLAB PLAN FOR T.O.W. ELEVATIONS

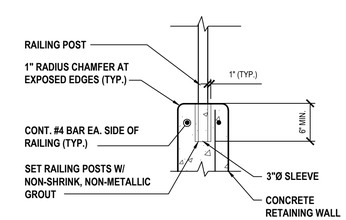

6 Typical Railing Attachment to Concrete

SCALE: N.T.S.

PROGRAM CONSULTANT:

Living with the BAY

CLIENTS:

NEW YORK STATE OF OPPORTUNITY. Parks, Recreation and Historic Preservation

Governor's Office of Storm Recovery

PROJECT MANAGER:

Stantec

LEAD LANDSCAPE ARCHITECTS + ARCHITECTS:

H2M architects + engineers
538 Broad Hollow Road
4th Floor East
Melville, NY 11747
P:(631)756-8000
F:(631)694-4122

CERTIFIED ARBORISTS + LANDSCAPE ARCHITECTS:

CHENEY CRISCH L.A.B.P.C. LANDSCAPE ARCHITECTURE PC

STRUCTURAL ENGINEERS:

LKB CONSULTING ENGINEERS

CIVIL ENGINEERS + LANDSCAPE ARCHITECTS:

Cashin Associates, P.C. ENGINEERING - PLANNING - ENVIRONMENTAL - CONSTRUCTION MANAGEMENT

LANDSCAPE ARCHITECTS:

MATRIXNEWORLD Engineering Program
Matrix New World Engineering, Land Surveying
Landscape Architecture, D.P.C.
442 State Route 35, Second Floor
Eatontown, New Jersey 07724
WBE / DBE / SBE
Tel: 732-389-2999
Fax: 973-240-1818
www.matrixnewworld.com
NEW JERSEY CERTIFICATE OF AUTHORIZATION No. 24GA27982300

SEAL

"ALTERATION OF THIS DOCUMENT EXCEPT BY A LICENSED PROFESSIONAL IS ILLEGAL"

THESE DOCUMENTS CONTAIN POTENTIALLY SENSITIVE INFORMATION AND SHALL BE USED FOR THEIR INTENDED PURPOSE. ONCE THE INTENDED PURPOSE HAS CEASED, THE DOCUMENTS SHALL BE DESTROYED IN A SECURE MANNER.

IT IS A VIOLATION OF STATE EDUCATION LAW FOR ANY PERSON, UNLESS UNDER THE DIRECTION OF A LICENSED ARCHITECT TO ALTER THIS DOCUMENT IN ANYWAY. ALTERATIONS MUST HAVE THE SEAL AFFIXED ALONG WITH A DESCRIPTION OF THE ALTERATIONS, DATE AND ARCHITECT'S SIGNATURE. COPYRIGHT © 2012

PHASE: **90% SUBMISSION**

Revisions

Number	Description	Date:
1		
2		
3		
4		
5		

Project Title

HEMPSTEAD LAKE STATE PARK

CONTRACT

NYSP
WORK ORDER: LI-022
CONTRACT: D004472
COA: 1290350/30377/33001/ PRK 4559

PROJECT #: NYSP-1503

DATE: JULY 2017

DESIGNED BY: MDH

DRAWN BY: MDH

CHECKED BY:

REVIEWED BY:

SHEET TITLE

DETAILS

SHEET # **S8.0**

C:\Users\mhomberger\appdata\local\temp\AcPublish_8760\S8.0.dwg Last Modified: Jul 20, 2017 - 12:07pm Plotted on: Jul 21, 2017 - 11:38am By mhomberger

SPLIT AIR CONDITIONING (AC) SCHEDULE

UNIT NO.	LOCATION	CONFIGURATION	REFR.CAP.(MBH) TOTAL (MBH)	HEAT.CAP.(MBH) TOTAL (MBH)	DIMENSIONS L x W x H (INCHES)	FAN SECTION CFM (H/L)	FAN SECTION ESP ("WG.)	FAN SECTION MOTOR (WATT)	ELECTRICAL MCA	ELECTRICAL V/PH/Hz	WEIGHT (LBS)	MFR.& MODEL NO.	REMARKS
AC-1	KITCHEN	CEILING CASSETTE	18	20	33 x 33 x 10	636/459	0.0	50	.41	208/1/60	42	PLFY-P18NEMU-E	1
AC-2	ENVIRONMENTAL ED 1	DUCTED SPLIT	48	54	47 x 36 x 15	1342/936	1	620	4.16	208/1/60	153	PEFY-P48NMHU-E2	1 2
AC-3	ENVIRONMENTAL ED 2	DUCTED SPLIT	24	27	39 x 28 x 8	706/423	1	70	2.8	208/1/60	100	PEFY-P24NM-SU-ER2	1 2
AC-4	ENVIRONMENTAL ED 2	DUCTED SPLIT	48	54	47 x 36 x 15	1342/936	1	620	4.16	208/1/60	153	PEFY-P48NMHU-E2	1 2
AC-5	PARK INFORMATION	DUCTED SPLIT	24	27	39 x 28 x 8	706/423	1	70	2.8	208/1/60	100	PEFY-P24NM-SU-ER2	2
AC-6	REVENUE OFFICE	CEILING CASSETTE	8	9	23 x 23 x 8	350/280	0.0	50	.29	208/1/60	34	PLFY-P08NCMU-ER2	1
AC-7	MANAGER'S OFFICE	CEILING CASSETTE	8	9	23 x 23 x 8	350/280	0.0	50	.29	208/1/60	34	PLFY-P08NCMU-ER2	1
AC-8	STORAGE	CEILING CASSETTE	8	9	23 x 23 x 8	350/280	0.0	50	.29	208/1/60	34	PLFY-P08NCMU-ER2	1
AC-9	HALLWAY	CEILING CASSETTE	8	9	23 x 23 x 8	350/280	0.0	50	.29	208/1/60	34	PLFY-P08NCMU-ER2	1
AC-10	STORAGE ROOM	WALL MOUNTED SPLIT	24	27	9 x 32 x 12	413/320	0.0	30	.63	208/1/60	46	PKFY-P24NKMU-E2.TH	1
AC-11	STORAGE ROOM	WALL MOUNTED SPLIT	24	27	9 x 32 x 12	413/320	0.0	30	.63	208/1/60	46	PKFY-P24NKMU-E2.TH	1

REMARKS: FURNISH AE-200A MASTER CONTROLLER. 1 FURNISH WITH FACTORY CONDENSATE PUMP. 2 PROVIDE FACTORY OPTIONAL FILTER BOX.

BRANCH CIRCUIT CONTROLLER (BCC) SCHEDULE

UNIT NO.	LOCATION	UNIT INFORMATION NUMBER OF BRANCHES	UNIT INFORMATION BRANCHES USED	UNIT INFORMATION DIMENSIONS (L x W x H)	UNITS SERVED	UNIT ELECTRICAL WATTS	UNIT ELECTRICAL RLA (AMP)	UNIT ELECTRICAL V/PH/Hz	UNIT WEIGHT (LBS.)	MFR.& MODEL NO.
BCC-1	INDOOR CEILING	8	4	44"x21"x12"	BCC-2,BCC-3, AC-10, AC-11	196	.43	208/1/60	124	MITSUBISHI_CMB-P108NU-HA1
BCC-2	INDOOR CEILING	4	4	26"x18"x12"	AC- 1, 2, 3, & 4	53	.25	208/1/60	62	MITSUBISHI_CMB-P104NU-GB1
BCC-3	INDOOR CEILING	8	5	26"x18"x12"	AC- 5, 6, 7, 8, & 9	106	.51	208/1/60	82	MITSUBISHI_CMB-P108NU-GB1

VRF CONDENSER (CU) SCHEDULE

UNIT NO.	LOCATION	REFRIGERATION REFRIG. TYPE	REFRIGERATION COMPRESSOR(S) NO.	REFRIGERATION COMPRESSOR(S) TONS	CAPACITY COOLING TEMP/CAPACITY (°F) (MBH)	CAPACITY HEATING TEMP/CAPACITY (°F) (MBH)	UNIT ELECTRICAL MCA (AMP)	UNIT ELECTRICAL MOP (AMP)	UNIT ELECTRICAL RLA (AMP)	UNIT ELECTRICAL V/PH/Hz	UNIT WEIGHT (LBS.)	DIMENSIONS (L x W x H)	MFR.& MODEL NO.
CU-1	OUTSIDE	410A	2	20	95°F/240	30°F/240 ~ -5°F/192	(2)45	(2)74	70.1	208/3/60	1,170	2 @ 48"x30"x65"	MITSUBISHI_PURY-P240TSHMU-A

EXHAUST FAN (EF) SCHEDULE

UNIT NO.	SERVICE	CFM	SP ("WG)	MOTOR BHP	MOTOR HP	MOTOR VOLTS	MOTOR PH	MOTOR HZ	ARRANGEMENT	WEIGHT	TYPE	MFR. & MODEL NO.	REMARKS
EF-1	BATHROOMS	800	.5	NA	1/4"	115	1	60	INLINE DIRECT DRIVE LEFT DISCHARGE	56 LBS	CENTRIFUGAL	GREENHECK SQ100	1

1 PROVIDE VARIABLE SPEED SWITCH WITH EACH FAN TO BE MOUNTED NEAR/ON FAN

SUPPLY FAN (SF) SCHEDULE

UNIT NO.	SERVICE	CFM	SP ("WG)	MOTOR BHP	MOTOR HP	MOTOR VOLTS	MOTOR PH	MOTOR HZ	ARRANGEMENT	WEIGHT	TYPE	MFR. & MODEL NO.	REMARKS
SF-1	MAKE UP AIR	800	.5	NA	1/4	115	1	60	INLINE DIRECT DRIVE FRONT DISCHARGE	56 LBS	CENTRIFUGAL	GREENHECK SQ100	1

1 PROVIDE VARIABLE SPEED SWITCH WITH EACH FAN TO BE MOUNTED NEAR/ON FAN

ENERGY RECOVER UNIT (ERU) SCHEDULE

UNIT NO.	SERVICE	SUPPLY SIDE CFM	SUPPLY SIDE SP "WG."	SUPPLY SIDE DUCT SIZE	EXHAUST SIDE CFM	EXHAUST SIDE SP "WG."	EXHAUST SIDE DUCT SIZE	THERMAL PERFORMANCE OA°F	THERMAL PERFORMANCE EX°F	THERMAL PERFORMANCE SA°F	THERMAL PERFORMANCE η_{th}	THERMAL PERFORMANCE BTU/HR	FREEZE PROTECTION TRAVERSING DEFROST FLA	FREEZE PROTECTION TRAVERSING DEFROST MCA	FREEZE PROTECTION TRAVERSING DEFROST MOP	FREEZE PROTECTION TRAVERSING DEFROST VOLTS/PH/HZ	WEIGHT	MFR. & MODEL NO.
ERU-1	OUTSIDE AIR / BATHROOM EXHAUST	800	0.50	9"x22"	800	0.50	9"x22"	9	72	49	64.6%	33,696	3	4	15	120/1/60	200 LBS	MUNTERS S74

ALUMINUM MATRIX CONSTRUCTION

FILTER BOX (FB) SCHEDULE

UNIT NO.	SERVICE	CFM	SP ("WG)	DIMENSIONS	WEIGHT	ARRANGEMENT	FILTER	MFR. & MODEL NO.
FB-1	MAKE UP AIR (SF-1)	800	.15	28"x24"x19"	88 LBS	INLINE WITH FAN SF-1	2" MERV 8 (2) 16"x20"	GREENHECK FILTERSQ100

RADIANT CEILING PANEL (RP) SCHEDULE

UNIT NO.	SERVICE	DIMENSIONS	ELECTRICAL VOLTS	ELECTRICAL PH	ELECTRICAL HZ	ELECTRICAL KW	WEIGHT (LBS)	MFR. & MODEL NO.	REMARKS
RP-1	STAIRWELL	24"x48"x1"	120	1	60	.75	20	MARLEY-ATH24488A	1
RP-2	STAIRWELL	24"x48"x1"	120	1	60	.75	20	MARLEY-ATH24488A	1
RP-3	ENTRY VESTIBULE	24"x96"x1"	120	1	60	1.5	20	MARLEY-ATH24968A	2
RP-4	MEN'S BATHROOM	24"x48"x1"	120	1	60	.75	20	MARLEY-ATH24488A	1
RP-5	FAMILY BATHROOM	24"x48"x1"	120	1	60	.75	20	MARLEY-ATH24488A	1
RP-6	WOMEN'S BATHROOM	24"x48"x1"	120	1	60	.75	20	MARLEY-ATH24488A	1

REMARKS:
1 FURNISH ACCESSORY QRF2448, RECESS MOUNTING FRAME.
2 FURNISH ACCESSORY QRF2496, RECESS MOUNTING FRAME.

ELECTRIC UNIT HEATER (UH) SCHEDULE

UNIT NO.	SERVICE	CFM	ELECTRICAL VOLTS	ELECTRICAL PH	ELECTRICAL HZ	ELECTRICAL KW	ELECTRICAL AMPS	MOTOR DATA VOLTS	MOTOR DATA RPM	MOTOR DATA HP	WEIGHT (LBS)	MFR. & MODEL NO.	REMARKS
UH-1	MECHANICAL ROOM	350	208	1	60	3	14.5	208	1600	1/100	27	QMARK-MUH03-81	1

REMARKS:
1 FURNISH MOUNTING BRACKET, 24V CONTROL TRANSFORMER OPTION, AND UNIT MOUNTED T-STAT.

LEGEND

SYMBOL	DESCRIPTION
	EXISTING/WORK BY OTHERS
	NEW WORK
T	THERMOSTAT
	RISER
	ELBOW DOWN
RS	REFRIGERANT SUCTION
RL	REFRIGERANT LIQUID
OA	OUTSIDE AIR
RA	RETURN AIR
LD	LINEAR DIFFUSER
CD	CEILING DIFFUSER
MD	MOTORIZED DAMPER
FC	FLEXIBLE CONNECTION
EAT	ENTERING AIR TEMPERATURE
LAT	LEAVING AIR TEMPERATURE
ESP	EXTERNAL STATIC PRESSURE
BDD	BACK DRAFT DAMPER
RG	RETURN AIR GRILLE
SG	SUPPLY AIR GRILLE
EG	EXHAUST GRILLE
CU 1	DENOTES CONDENSING UNIT NO. 1
AC 1	AIR CONDITIONING UNIT NO. 1
EF 1	DENOTES EXHAUST FAN NO. 1
SF 1	DENOTES SUPPLY FAN NO. 1
FB 1	DENOTES FILTER BOX NO. 1
ERU 1	DENOTES ENERGY RECOVER UNIT NO. 1
UH 1	DENOTES UNIT HEATER NO. 1
RP 1	DENOTES RADIANT PANEL NO. 1
BCC 1	DENOTES BRANCH CONTROL CONTROLER NO. 1
	ELBOW COMPLETE TURNING VANES
	FLEXIBLE DUCT CONNECTION
	ACOUSTICALLY LINED DUCT
VD	MANUAL VOLUME DAMPER
	FOUR WAY DIFFUSER
	CEILING RETURN

NOTE: ALL WORK IS NEW, UNLESS OTHERWISE NOTED.

NY RISING

NEW YORK STATE Parks, Recreation and Historic Preservation

CONSULTANTS:

Stantec

H2M architects + engineers
538 Broad Hollow Road
4th Floor East
Melville, NY 11747
P:(631)754-8000
F:(631)694-4122

SIDNEY DESIGN L.A.S.P.C. LANDSCAPE ARCHITECTURE PC

LKB CONSULTING ENGINEERS

Cashin Associates, P.C. ENGINEERING • PLANNING • ENVIRONMENTAL • CONSTRUCTION MANAGEMENT

LYNSTAAR ENGINEERING, P.C.

SEAL

"ALTERATION OF THIS DOCUMENT EXCEPT BY A LICENSED PROFESSIONAL IS ILLEGAL"

THESE DOCUMENTS CONTAIN POTENTIALLY SENSITIVE INFORMATION AND SHALL BE USED FOR THEIR INTENDED PURPOSE. ONCE THE INTENDED PURPOSE HAS CEASED, THE DOCUMENTS SHALL BE DESTROYED IN A SECURE MANNER.

IT IS A VIOLATION OF STATE EDUCATION LAW FOR ANY PERSON, UNLESS UNDER THE DIRECTION OF A LICENSED ARCHITECT TO ALTER THIS DOCUMENT IN ANYWAY. ALTERATIONS MUST HAVE THE SEAL AFFIXED ALONG WITH A DESCRIPTION OF THE ALTERATIONS, DATE AND ARCHITECT'S SIGNATURE. COPYRIGHT © 2012

PHASE
% SUBMISSION

Revisions

Number	Description	Date:
1		
2		
3		
4		
5		

Project Title

HEMPSTEAD LAKE STATE PARK

CONTRACT
NYSP
WORK ORDER: LJ-022
CONTRACT: D004472
COA: 1290350/30377/33001/ PRK 4559

PROJECT #: NYSP-1503
DATE: JUNE 2017
DESIGNED BY: **PFD**
DRAWN BY: **PFD**
CHECKED BY: **BCS** REVIEWED BY: **GRL**

SHEET TITLE
MECHANICAL LEGEND AND SCHEDULES

SHEET #
M0.1

N:\AutoCAD Drawings\1712 Hempstead Park\DWGs\1712_M0.0.dwg Last Modified: Jul 11, 2017 - 9:33am Plotted on: Jul 11, 2017 - 9:36am By: jross

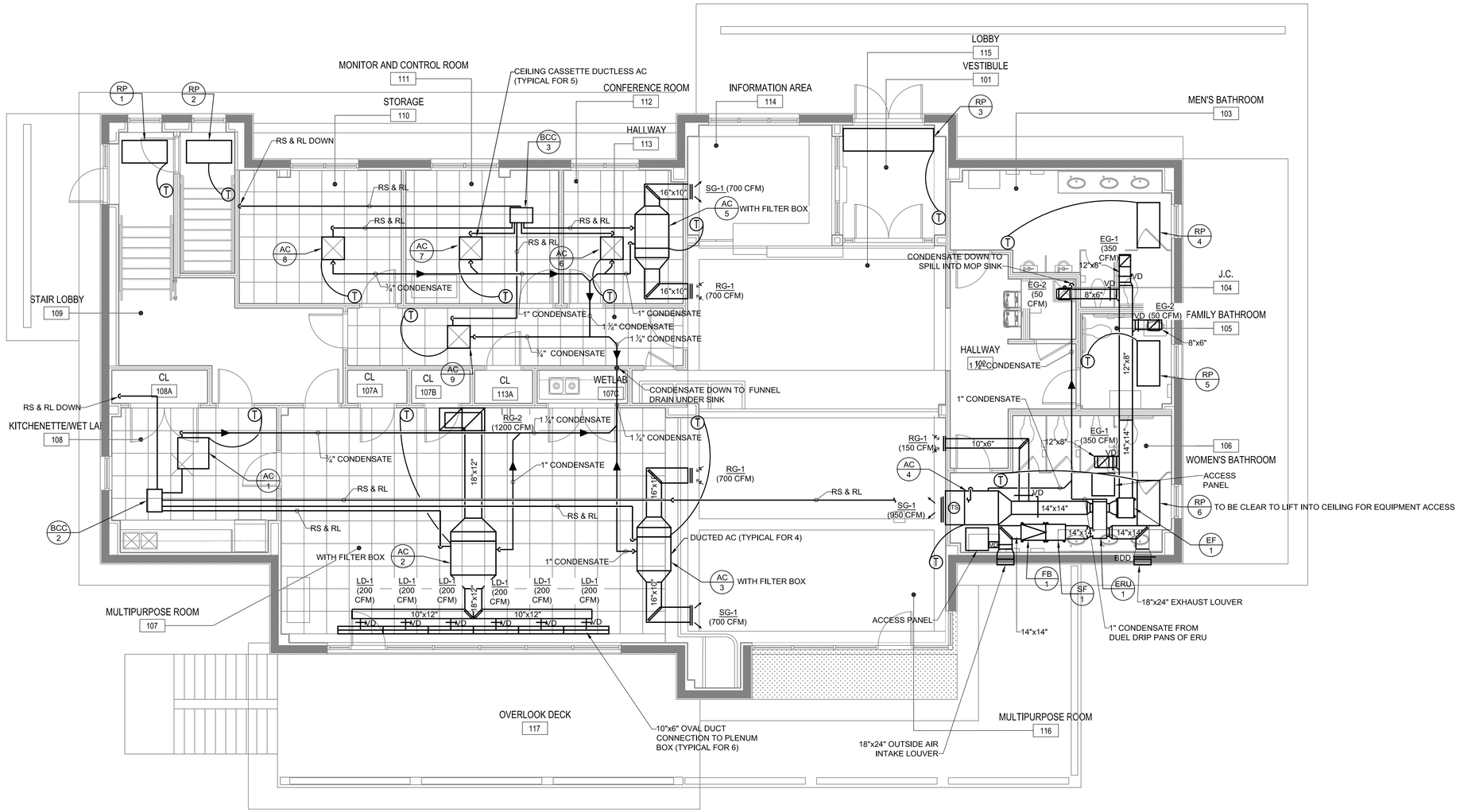

MECHANICAL FIRST FLOOR PLAN

SCALE: 1/4" = 1'-0"

NOTE:
REFRIGERANT RS & RL SIZING PER MANUFACTURER'S SPECIFICATIONS

NY RISING

NEW YORK STATE | Parks, Recreation and Historic Preservation

CONSULTANTS:

Stantec

H2M architects + engineers
538 Broad Hollow Road
4th Floor East
Melville, NY 11747
P:(631)754-8000
F:(631)694-4122

LKB CONSULTING ENGINEERS

Cashin Associates, P.C.

LYNSTAAR ENGINEERING, P.C.

SEAL

"ALTERATION OF THIS DOCUMENT EXCEPT BY A LICENSED PROFESSIONAL IS ILLEGAL"

THESE DOCUMENTS CONTAIN POTENTIALLY SENSITIVE INFORMATION AND SHALL BE USED FOR THEIR INTENDED PURPOSE. ONCE THE INTENDED PURPOSE HAS CEASED, THE DOCUMENTS SHALL BE DESTROYED IN A SECURE MANNER.

IT IS A VIOLATION OF STATE EDUCATION LAW FOR ANY PERSON, UNLESS UNDER THE DIRECTION OF A LICENSED ARCHITECT TO ALTER THIS DOCUMENT IN ANYWAY. ALTERATIONS MUST HAVE THE SEAL AFFIXED ALONG WITH A DESCRIPTION OF THE ALTERATIONS, DATE AND ARCHITECT'S SIGNATURE. COPYRIGHT © 2012

PHASE
% SUBMISSION

Revisions

Number	Description	Date:
1		
2		
3		
4		
5		

Project Title

HEMPSTEAD LAKE STATE PARK

CONTRACT
NYSP
WORK ORDER: LI-022
CONTRACT: D004472
COA: 1290350/30377/33001/ PRK 4559

PROJECT #: NYSP-1503
DATE: JUNE 2017
DESIGNED BY: PFD
DRAWN BY: PFD
CHECKED BY: BCS
REVIEWED BY: GRL

SHEET TITLE
MECHANICAL FIRST FLOOR PLAN

SHEET #
M1.1

N:\AutoCAD Drawings\1712 Hempstead Park\DWG\1712_M-1.0.dwg Last Modified: Jul 11, 2017 - 9:33am Plotted on: Jul 11, 2017 - 9:46am By pross

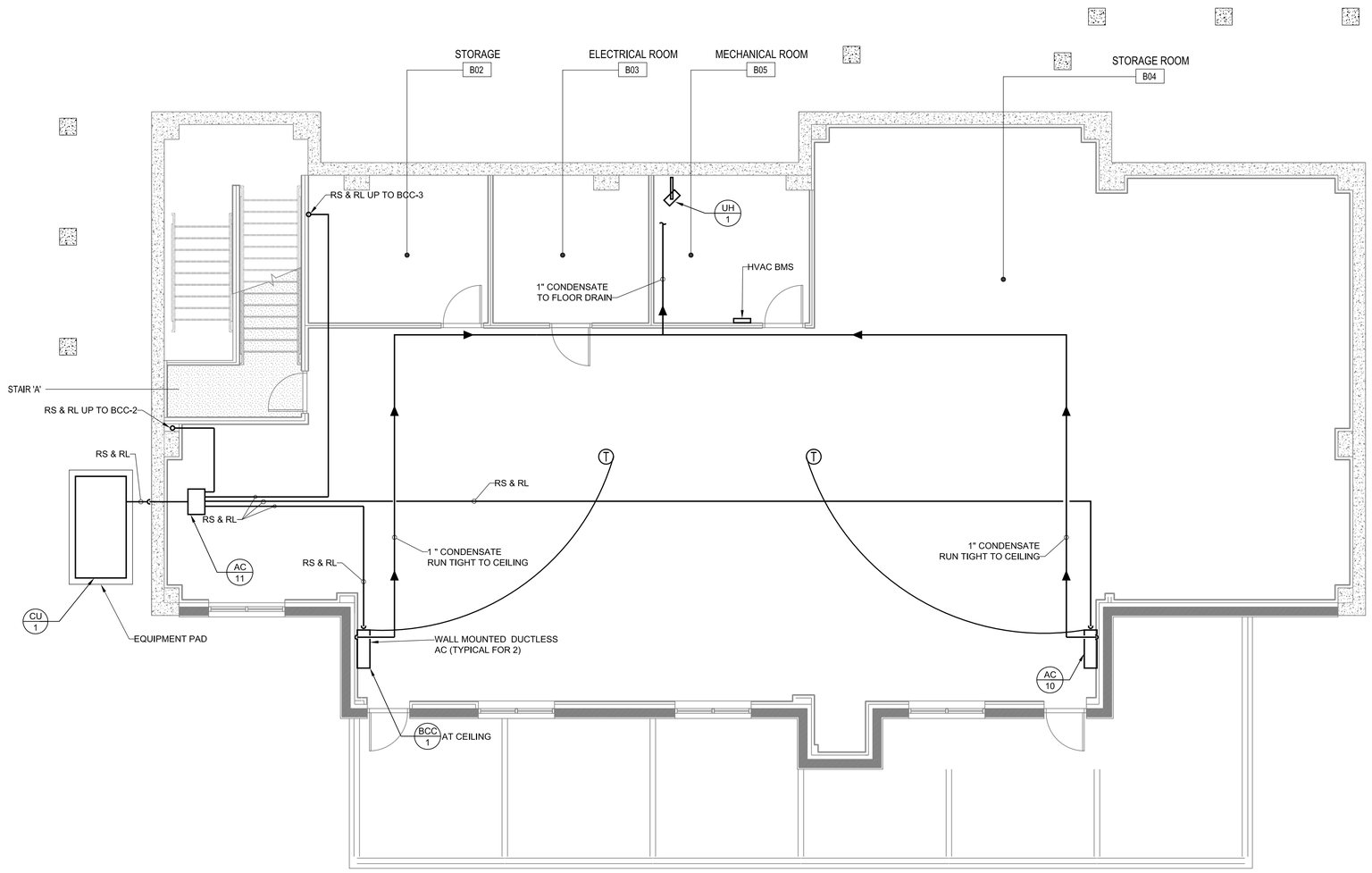

MECHANICAL BASEMENT FLOOR PLAN

SCALE: 1/4" = 1'-0"

NOTE:
REFRIGERANT RS & RL SIZING PER
MANUFACTURER'S SPECIFICATIONS

NY RISING

NEW YORK STATE Parks, Recreation and Historic Preservation

CONSULTANTS:

Stantec

H2M architects + engineers
538 Broad Hollow Road
4th Floor East
Melville, NY 11747
P:(631)756-8000
F:(631)694-4122

LKB CONSULTING ENGINEERS

Cashin Associates, P.C.

LYNSTAR ENGINEERING, P.C.

SEAL

"ALTERATION OF THIS DOCUMENT EXCEPT BY A LICENSED PROFESSIONAL IS ILLEGAL"

THESE DOCUMENTS CONTAIN POTENTIALLY SENSITIVE INFORMATION AND SHALL BE USED FOR THEIR INTENDED PURPOSE. ONCE THE INTENDED PURPOSE HAS CEASED, THE DOCUMENTS SHALL BE DESTROYED IN A SECURE MANNER.

IT IS A VIOLATION OF STATE EDUCATION LAW FOR ANY PERSON, UNLESS UNDER THE DIRECTION OF A LICENSED ARCHITECT TO ALTER THIS DOCUMENT IN ANYWAY. ALTERATIONS MUST HAVE THE SEAL AFFIXED ALONG WITH A DESCRIPTION OF THE ALTERATIONS, DATE AND ARCHITECT'S SIGNATURE. COPYRIGHT © 2012

PHASE
% SUBMISSION

Revisions

Number	Description	Date:
1		
2		
3		
4		
5		

Project Title

HEMPSTEAD LAKE STATE PARK

CONTRACT
NYSP
WORK ORDER: LI-022
CONTRACT: D004472
COA: 1290350/30377/33001/ PRK 4559

PROJECT #: NYSP-1503
DATE: JUNE 2017
DESIGNED BY: **PFD**
DRAWN BY: **PFD**
CHECKED BY: **BCS** REVIEWED BY: **GRL**

SHEET TITLE
MECHANICAL BASEMENT PLAN

SHEET #
M1.0

N:\AutoCAD Drawings\1712 Hempstead Park\DWG\1712_M-1.0.dwg Last Modified: Jul 11, 2017 - 9:33am Plotted on: Jul 11, 2017 - 9:44am By jross

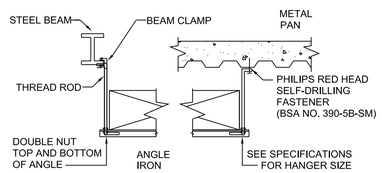

DUCT HANGER DETAIL

NO SCALE

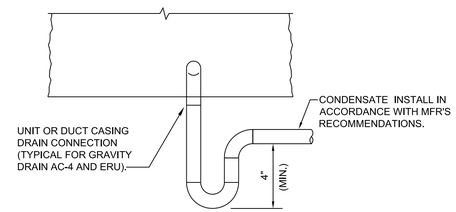

AC CONDENSATE DRAIN CONNECTION DETAIL

NO SCALE

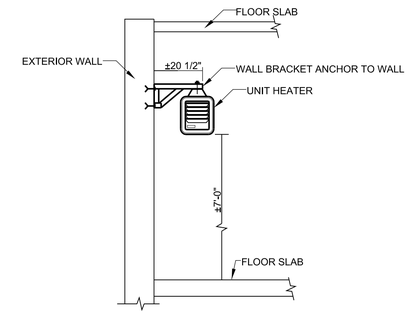

UNIT HEATER MOUNTING DETAIL

NO SCALE

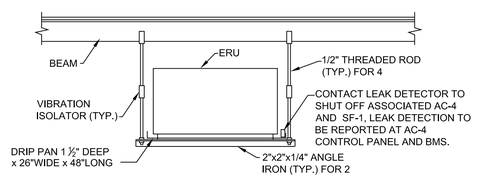

ERU SUPPORT DETAIL (TYP.)

NO SCALE

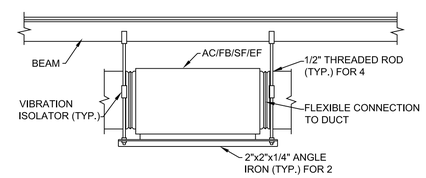

EQUIPMENT SUPPORT DETAIL (TYP.)

NO SCALE

NY RISING

NEW YORK STATE Parks, Recreation and Historic Preservation

CONSULTANTS:

Stantec

H2M architects + engineers
538 Broad Hollow Road
4th Floor East
Melville, NY 11747
P:(631)756-8000
F:(631)694-4122

LKB CONSULTING ENGINEERS

Cashin Associates, P.C.

LYNSTAAR ENGINEERING, P.C.

SEAL

"ALTERATION OF THIS DOCUMENT EXCEPT BY A LICENSED PROFESSIONAL IS ILLEGAL"

THESE DOCUMENTS CONTAIN POTENTIALLY SENSITIVE INFORMATION AND SHALL BE USED FOR THEIR INTENDED PURPOSE. ONCE THE INTENDED PURPOSE HAS CEASED, THE DOCUMENTS SHALL BE DESTROYED IN A SECURE MANNER.

IT IS A VIOLATION OF STATE EDUCATION LAW FOR ANY PERSON, UNLESS UNDER THE DIRECTION OF A LICENSED ARCHITECT TO ALTER THIS DOCUMENT IN ANYWAY. ALTERATIONS MUST HAVE THE SEAL AFFIXED ALONG WITH A DESCRIPTION OF THE ALTERATIONS, DATE AND ARCHITECT'S SIGNATURE. COPYRIGHT © 2012

PHASE

% SUBMISSION

Revisions

Number	Description	Date:
1		
2		
3		
4		
5		

Project Title

HEMPSTEAD LAKE STATE PARK

CONTRACT

NYSP
WORK ORDER: LI-022
CONTRACT: D004472
COA: 1290350/30377/33001/ PRK 4559

PROJECT #: NYSP-1503

DATE: JUNE 2017

DESIGNED BY: **PFD**

DRAWN BY: **PFD**

CHECKED BY: **BCS** REVIEWED BY: **GRL**

SHEET TITLE

MECHANICAL DETAILS 2 OF 2

SHEET #

M3.1

N:\AutoCAD Drawings\1712 Hempstead Park\DWG\1712_M-2.0.dwg Last Modified: Jul 11, 2017 - 9:33am Plotted on: Jul 11, 2017 - 9:47am By jross

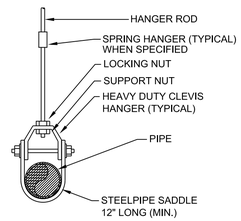

TYPICAL CLEVIS HANGER SUPPORT

NO SCALE

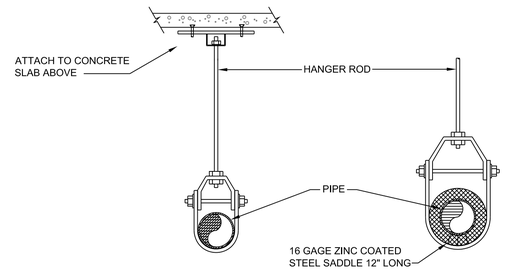

UINSULATED PIPE

INSULATED PIPE W/ VAPOR BARRIER

TYPICAL CLEVIS HANGER SUPPORT

NO SCALE

INDIVIDUAL PIPE HANGER ROD & SPACING SCHEDULE												
NOMINAL PIPE OR TUBE SIZE - INCHES	3/4	1	1 1/2	2	2 1/2	3	4	5	6	8	10	12
HANGER ROD SIZES - INCHES	3/8	3/8	3/8	3/8	1/2	1/2	5/8	5/8	7/8	7/8	7/8	7/8
MAXIMUM SPACING BETWEEN PIPE SUPPORTS - FEET	6	7	9	10	11	12	14	16	17	19	22	23
MAX. SPACING BETWEEN CU. TUBE SUPPORTS - FEET	6	6	8	9	10	10	12	14	14	16	18	20

NOTES: TRAPEZE HANGER SPACING SHALL BE BASED ON SPACING OF SMALLEST PIPE ON TRAPEZE. TRAPEZE SHALL BE DESIGNED WITH A FACTOR OF SAFETY OF 5 FOR CENTER OF SPAN CONCENTRATED LOAD.

PIPE SUPPORT DETAIL

NO SCALE

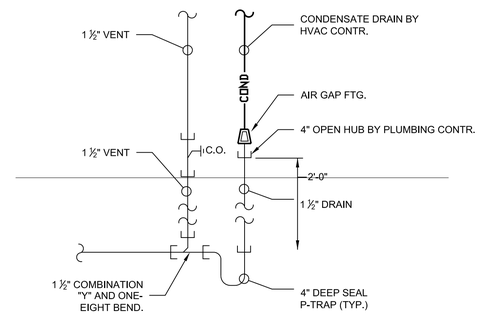

DETAIL OF CONDENSATE DRAIN RECEIVER

NO SCALE

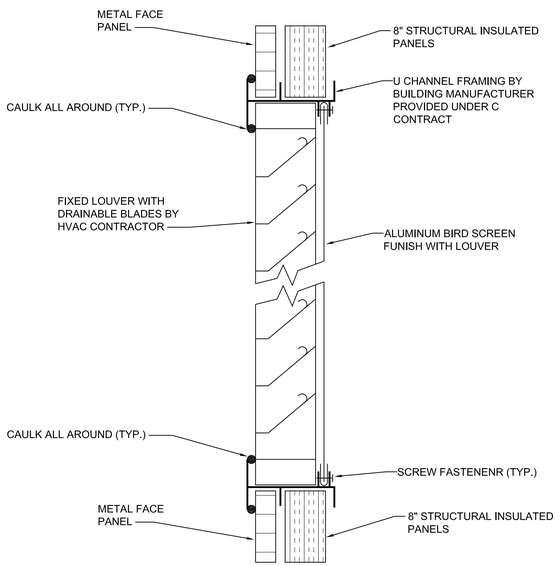

LOUVER DETAIL

NO SCALE

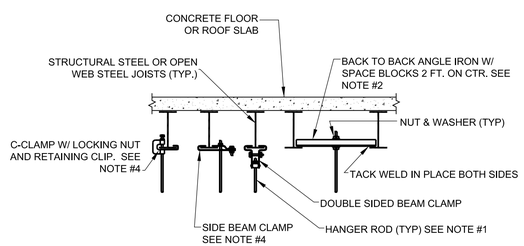

NOTES:

1. REFER TO PIPE HANGER DETAIL FOR HANGER ROD SIZE. FOR CEILING SUSPENDED EQUIPMENT PROVIDE MIN. 3/8" DIA. HANGER ROD (REFER TO MANUFACTURERS INSTALLATION INSTRUCTIONS).
2. FOR PIPES UNDER 2" US A SINGLE 1-1/2"x1-1/2"x1/4" ANGLE IRON WITH C-CLAMP. FOR PIPES 2-1/2" AND LARGER USE 3"x3"x1/4" ANGLE IRON BACK TO BACK AS SHOWN.
3. REPAIR OF FIRE PROOFING IN ORDER TO FACILITATE THE INSTALLATION OF HANGER RODS IN EXISTING CONSTRUCTION SHALL BE BY THE G.C.
4. USE OF C-CLAMPS AND SIDE BEAM CLAMPS LIMITED TO PIPING 2-1/2" AND UNDER.

TYPICAL METHODS OF SECURING HANGER RODS TO STRUCTURAL STEEL

NO SCALE

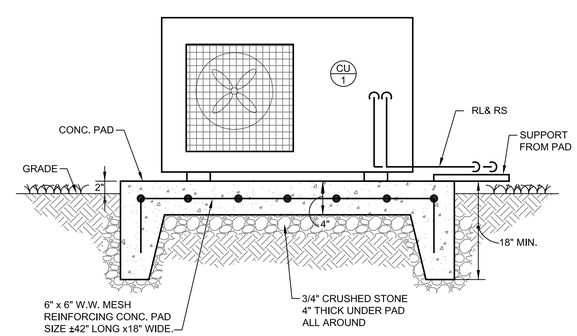

CONCRETE PAD SUPPORT DETAIL

NO SCALE

NY RISING

NEW YORK STATE | Parks, Recreation and Historic Preservation

CONSULTANTS:

Stantec

H2M architects + engineers
538 Broad Hollow Road
4th Floor East
Melville, NY 11747
P:(631)756-8000
F:(631)694-4122

SURVEY DESIGN LAND SURVEYING ARCHITECTURE ETC

LKB CONSULTING ENGINEERS

Cashin Associates, P.C. ENGINEERING • PLANNING • ENVIRONMENTAL • CONSTRUCTION MANAGEMENT

LYNSTAAR ENGINEERING, P.C.

SEAL

"ALTERATION OF THIS DOCUMENT EXCEPT BY A LICENSED PROFESSIONAL IS ILLEGAL"

THESE DOCUMENTS CONTAIN POTENTIALLY SENSITIVE INFORMATION AND SHALL BE USED FOR THEIR INTENDED PURPOSE. ONCE THE INTENDED PURPOSE HAS CEASED, THE DOCUMENTS SHALL BE DESTROYED IN A SECURE MANNER.

IT IS A VIOLATION OF STATE EDUCATION LAW FOR ANY PERSON, UNLESS UNDER THE DIRECTION OF A LICENSED ARCHITECT TO ALTER THIS DOCUMENT IN ANYWAY. ALTERATIONS MUST HAVE THE SEAL AFFIXED ALONG WITH A DESCRIPTION OF THE ALTERATIONS, DATE AND ARCHITECT'S SIGNATURE. COPYRIGHT © 2012

PHASE
% SUBMISSION

Revisions

Number	Description	Date:
1		
2		
3		
4		
5		

Project Title

HEMPSTEAD LAKE STATE PARK

CONTRACT
NYSP
WORK ORDER: LI-022
CONTRACT: D004472
COA: 1290350/30377/33001/ PRK 4559

PROJECT #: NYSP-1503
DATE: JUNE 2017
DESIGNED BY: **PFD**
DRAWN BY: **PFD**
CHECKED BY: **BCS** REVIEWED BY: **GRL**

SHEET TITLE

MECHANICAL DETAILS 1 OF 2

SHEET # **M3.0**

N:\AutoCAD Drawings\1712 Hempstead Park\DWG\1712_M-2.0.dwg Last Modified: Jul 11, 2017 - 9:33am Plotted on: Jul 11, 2017 - 9:46am By jross

ELECTRIC WATER HEATER SCHEDULE

UNIT NO.	STORAGE CAPACITY	TEMP. RISE °F	MAXIMUM PRESSURE	RECOVERY GPH	INPUT KW	BTU INPUT PER HOUR	ELECTRIC SERVICE		MFR.& MODEL NO.	REMARKS
HWH 1	50 GALS.	90	150 PSIG	41	9	30,709	208 - 3Ø - 60HZ	FLA 25	RHEEM-ES50-9-G	1

1 FURNISH WITH TEMPERATURE AND PRESSURE RELIEF VALVE.

PUMP SCHEDULE

UNIT NO.	GPM	TDH	RPM	BHP.	MOTOR WATTS	CONNECTIONS		ELECTRIC SERVICE	TYPE	MFR.& MODEL NO.
						SUCT.	DISCH.			
HWCP 1	.5	.5	3250	1/40	-	1/2"	1/2"	120V-1Ø-60HZ -0.52 FLA	INLINE WET ROTOR	TACO MODEL 006-BC4

NOTE:

FURNISH ALL HOT WATER CIRCULATION PUMPS WITH LINE THERMOSTAT.
ALL HOT WATER CIRCULATION PUMPS TO SIGNAL ON FROM LINE THERMOSTAT READING OF 110° F AND OFF FROM READING OF 130° F.

EXPANSION TANK SCHEDULE

UNIT NO.	TANK VOLUME (GAL)	WEIGHT (LBS)	MFR.& MODEL NO.
ET 1	2.0	10	AMTROL ST-5C

LEGEND

SYMBOL	DESCRIPTION
	NEW WORK
	EXISTING/WORK BY OTHER TRADES
	UNION
	SHUT OFF VALVE
	BALANCING VALVE
	CHECK VALVE
	COLD WATER
	HOT WATER SUPPLY
	HOT WATER RETURN
	SANITARY LINE
	VENT
	HIDDEN WORK
CW	COLD WATER
HWS	HOT WATER SUPPLY
HWR	HOT WATER RETURN
V	VENT
SAN	SANITARY LINE
WC	WATER CLOSET
S	SINK
FD	FLOOR DRAIN
SH	SHOWER
UR	URINAL
MB	MOP BASIN
WCO	WALL CLEAN OUT
FCO	FLOOR CLEANOUT
VTR	VENT THROUGH ROOF
HWH	HOT WATER HEATER
HWCP	HOT WATER CIRCULATING PUMP
HB	HOSE BIBB
R	REFRIGERATOR
FPHB	FREEZE PROOF HOSE BIBB

NOTE: ALL WORK IS NEW UNLESS NOTED OTHERWISE.

NY RISING

NEW YORK STATE Parks, Recreation and Historic Preservation

CONSULTANTS:

Stantec

H2M architects + engineers
538 Broad Hollow Road
4th Floor East
Melville, NY 11747
P:(631)756-8000
F:(631)694-4122

SURVEY DESIGN L.A.S.P.C. LANDSCAPE ARCHITECTURE PC

LKB CONSULTING ENGINEERS

Cashin Associates, P.C. ENGINEERING • PLANNING • ENVIRONMENTAL • CONSTRUCTION MANAGEMENT

LYNSTAAR ENGINEERING, P.C.

SEAL

"ALTERATION OF THIS DOCUMENT EXCEPT BY A LICENSED PROFESSIONAL IS ILLEGAL"

THESE DOCUMENTS CONTAIN POTENTIALLY SENSITIVE INFORMATION AND SHALL BE USED FOR THEIR INTENDED PURPOSE. ONCE THE INTENDED PURPOSE HAS CEASED, THE DOCUMENTS SHALL BE DESTROYED IN A SECURE MANNER.

IT IS A VIOLATION OF STATE EDUCATION LAW FOR ANY PERSON, UNLESS UNDER THE DIRECTION OF A LICENSED ARCHITECT TO ALTER THIS DOCUMENT IN ANYWAY. ALTERATIONS MUST HAVE THE SEAL AFFIXED ALONG WITH A DESCRIPTION OF THE ALTERATIONS, DATE AND ARCHITECT'S SIGNATURE. COPYRIGHT © 2012

PHASE
% SUBMISSION

Revisions

Number	Description	Date:
1		
2		
3		
4		
5		

Project Title

HEMPSTEAD LAKE STATE PARK

CONTRACT
NYSP
WORK ORDER: LI-022
CONTRACT: D004472
COA: 1290350/30377/33001/ PRK 4559

PROJECT #: NYSP-1503
DATE: JUNE 2017
DESIGNED BY: **JSR**
DRAWN BY: **JSR**
CHECKED BY: **BCS** REVIEWED BY: **GRL**

SHEET TITLE

LEGEND AND SCHEDULES

SHEET #
P0.1

N:\AutoCAD Drawings\1712 Hempstead Park\DWGs\1712_P-0.0.dwg Last Modified: Jul 07, 2017 - 11:28am Plotted on: Jul 11, 2017 - 9:47am By jross

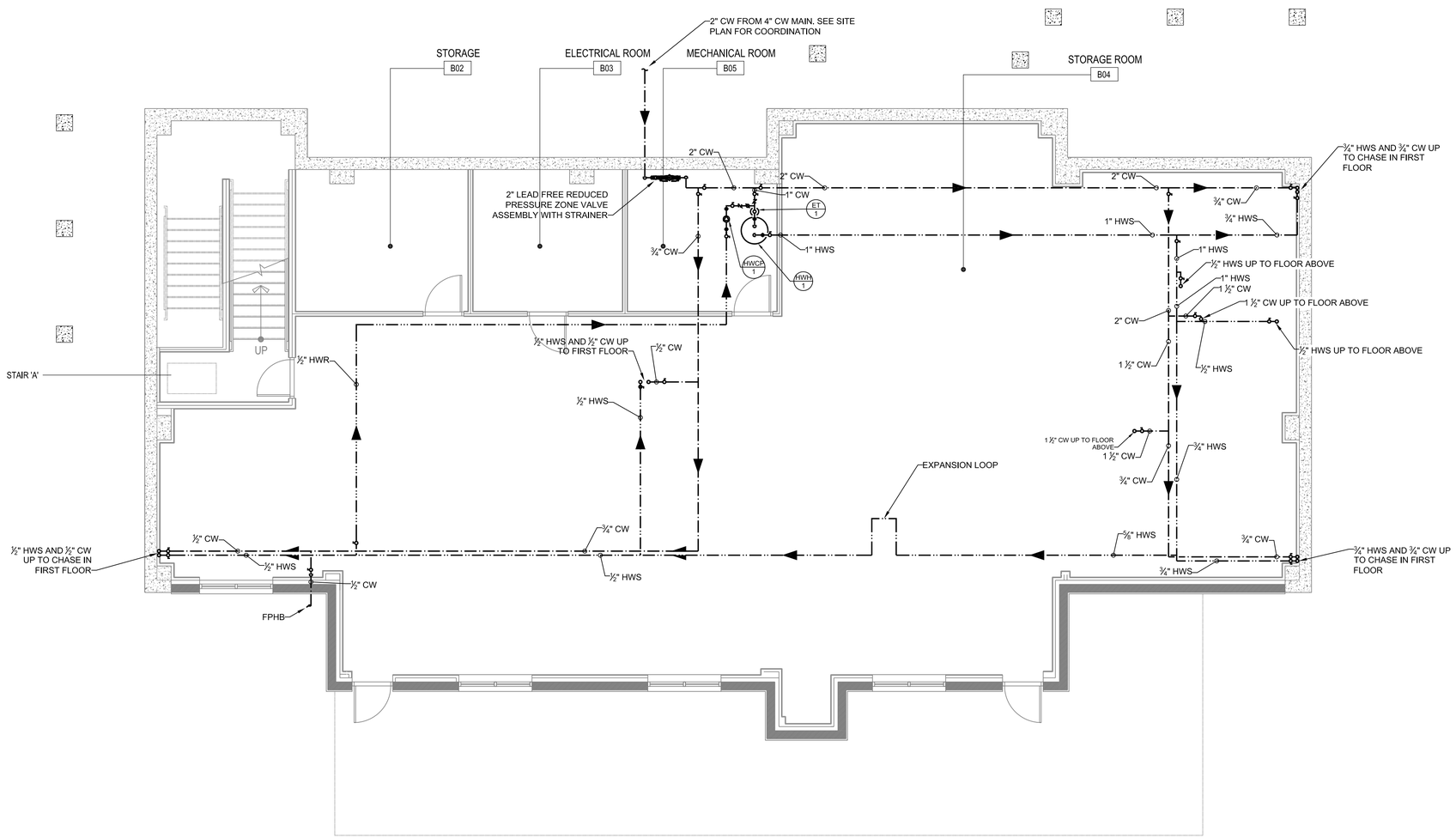

DOMESTIC PLUMBING BASEMENT FLOOR PLAN

SCALE: 3/16" = 1'-0"

NOTE: RUN PIPING TIGHT TO CEILING

NY RISING

NEW YORK STATE | Parks, Recreation and Historic Preservation

CONSULTANTS:

Stantec

H2M architects + engineers
538 Broad Hollow Road
4th Floor East
Melville, NY 11747
P:(631)756-8000
F:(631)694-4122

SURVEY
DESIGN
L.A.B.P.C. LANDSCAPE ARCHITECT / LAB PC

LKB CONSULTING ENGINEERS

Cashin Associates, P.C.
ENGINEERING • PLANNING • ENVIRONMENTAL • CONSTRUCTION MANAGEMENT

LYNSTAAR ENGINEERING, P.C.

SEAL

"ALTERATION OF THIS DOCUMENT EXCEPT BY A LICENSED PROFESSIONAL IS ILLEGAL"

THESE DOCUMENTS CONTAIN POTENTIALLY SENSITIVE INFORMATION AND SHALL BE USED FOR THEIR INTENDED PURPOSE. ONCE THE INTENDED PURPOSE HAS CEASED, THE DOCUMENTS SHALL BE DESTROYED IN A SECURE MANNER.

IT IS A VIOLATION OF STATE EDUCATION LAW FOR ANY PERSON, UNLESS UNDER THE DIRECTION OF A LICENSED ARCHITECT TO ALTER THIS DOCUMENT IN ANYWAY. ALTERATIONS MUST HAVE THE SEAL AFFIXED ALONG WITH A DESCRIPTION OF THE ALTERATIONS, DATE AND ARCHITECT'S SIGNATURE. COPYRIGHT © 2012

PHASE
% SUBMISSION

Revisions

Number	Description	Date:
1		
2		
3		
4		
5		

Project Title

HEMPSTEAD LAKE STATE PARK

CONTRACT
NYSP
WORK ORDER: LI-022
CONTRACT: D004472
COA: 1290350/30377/33001/ PRK 4559

PROJECT #: NYSP-1503
DATE: JUNE 2017
DESIGNED BY: **PFD**
DRAWN BY: **PFD**
CHECKED BY: **BCS** REVIEWED BY: **GRL**

SHEET TITLE
DOMESTIC PLUMBING BASEMENT PLAN

SHEET # **P1.0**

N:\AutoCAD Drawings\1712 Hempstead Park\DWG\1712_P-1.0.dwg Last Modified: Jul 11, 2017 - 9:12am Plotted on: Jul 11, 2017 - 9:49am By jross

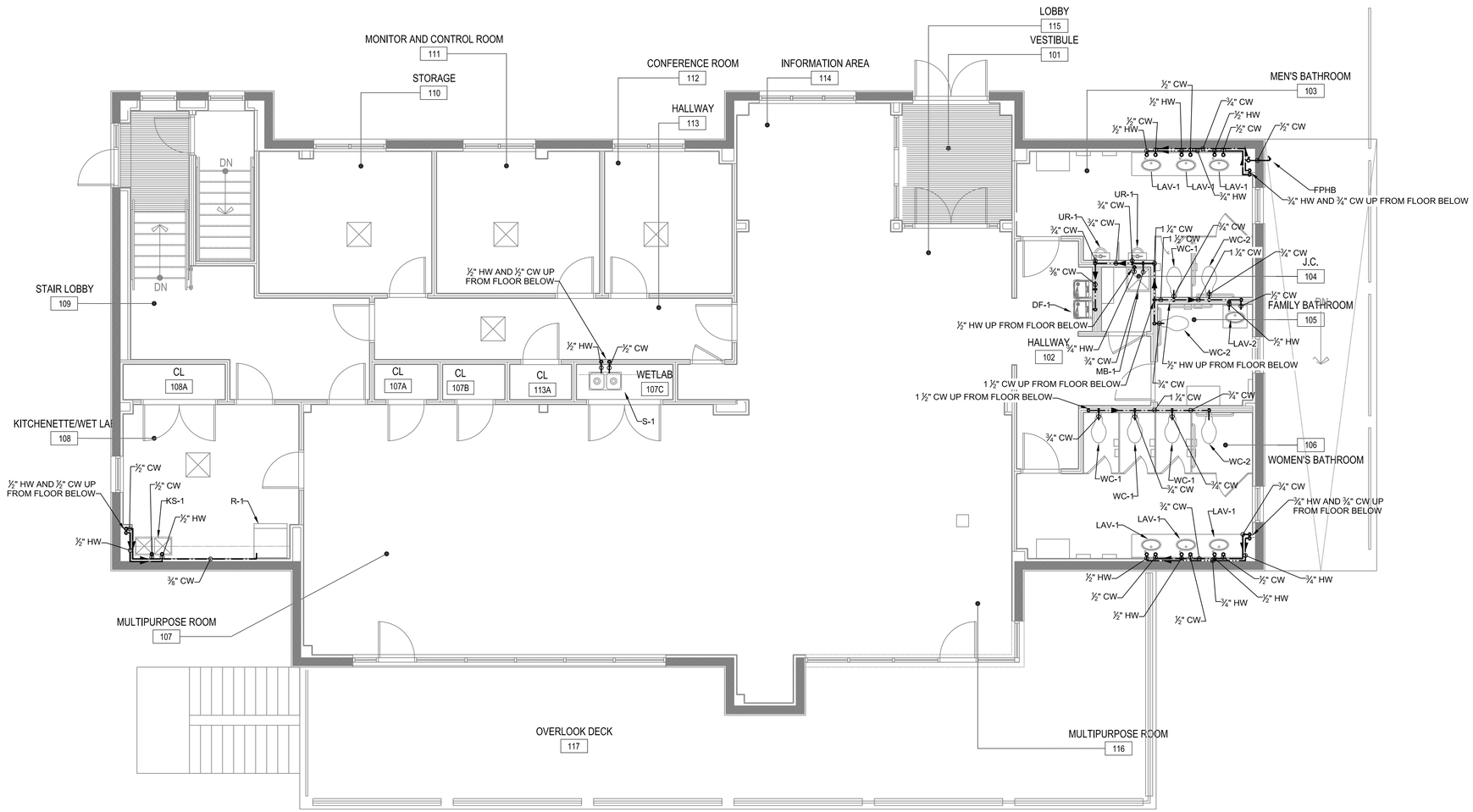

DOMESTIC PLUMBING FIRST FLOOR PLAN

SCALE: 1/4" = 1'-0"

NY RISING

NEW YORK STATE | Parks, Recreation and Historic Preservation

CONSULTANTS:

Stantec

H2M architects + engineers
538 Broad Hollow Road
4th Floor East
Melville, NY 11747
P:(631)756-8000
F:(631)694-4122

GARNEY DESIGN
L & S P.C. LANDSCAPE ARCHITECTURE PC

LKB CONSULTING ENGINEERS

Cashin Associates, P.C.
ENGINEERING • PLANNING • ENVIRONMENTAL • CONSTRUCTION MANAGEMENT

LYNSTAAR ENGINEERING, P.C.

SEAL

"ALTERATION OF THIS DOCUMENT EXCEPT BY A LICENSED PROFESSIONAL IS ILLEGAL"

THESE DOCUMENTS CONTAIN POTENTIALLY SENSITIVE INFORMATION AND SHALL BE USED FOR THEIR INTENDED PURPOSE. ONCE THE INTENDED PURPOSE HAS CEASED, THE DOCUMENTS SHALL BE DESTROYED IN A SECURE MANNER.

IT IS A VIOLATION OF STATE EDUCATION LAW FOR ANY PERSON, UNLESS UNDER THE DIRECTION OF A LICENSED ARCHITECT TO ALTER THIS DOCUMENT IN ANYWAY. ALTERATIONS MUST HAVE THE SEAL AFFIXED ALONG WITH A DESCRIPTION OF THE ALTERATIONS, DATE AND ARCHITECT'S SIGNATURE. COPYRIGHT © 2012

PHASE
% SUBMISSION

Revisions

Number	Description	Date:
1		
2		
3		
4		
5		

Project Title

HEMPSTEAD LAKE STATE PARK

CONTRACT
NYSP
WORK ORDER: LI-022
CONTRACT: D004472
COA: 1290350/30377/33001/ PRK 4559

PROJECT #: NYSP-1503
DATE: JUNE 2017
DESIGNED BY: JSR
DRAWN BY: JSR
CHECKED BY: BCS
REVIEWED BY: GRL

SHEET TITLE
DOMESTIC PLUMBING FIRST FLOOR PLAN

SHEET #
P1.1

N:\AutoCAD Drawings\1712 Hempstead Park\DWG\1712_P-1.1.dwg Last Modified: Jul 11, 2017 - 9:12am Plotted on: Jul 11, 2017 - 9:50am By jross

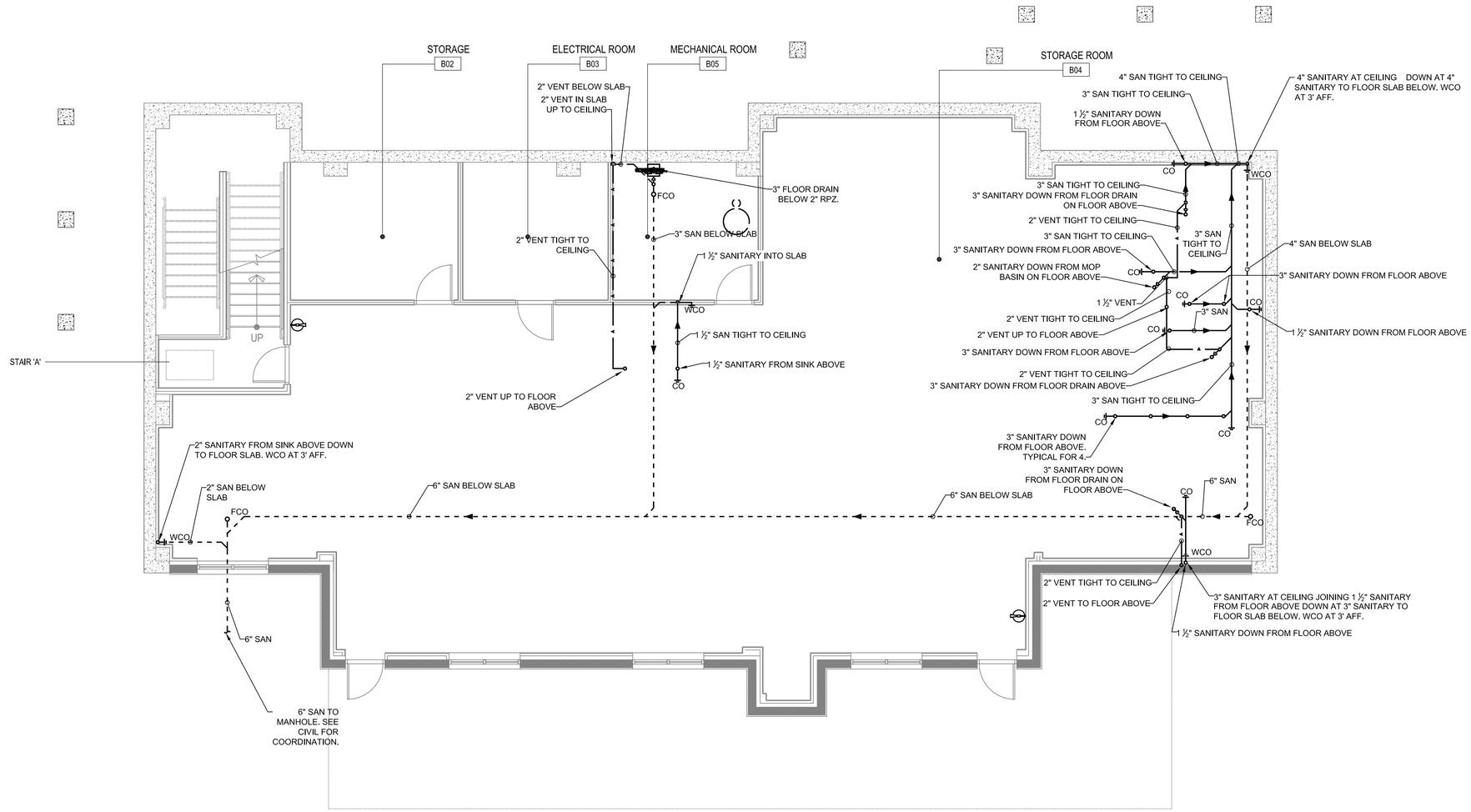

SANITARY PLUMBING BASEMENT FLOOR PLAN

SCALE: 1/4" = 1'-0"

NY RISING

NEW YORK STATE — Parks, Recreation and Historic Preservation

CONSULTANTS:

Stantec

H2M architects + engineers
538 Broad Hollow Road
4th Floor East
Melville, NY 11747
P:(631)756.8000
F:(631)694-4122

SURVEY
DESIGN
L.A.S P.C. LANDSCAPE ARCHITECTURE PC

LKB CONSULTING ENGINEERS

Cashin Associates, P.C.
ENGINEERING • PLANNING • ENVIRONMENTAL • CONSTRUCTION MANAGEMENT

LYNSTAR ENGINEERING, P.C.

SEAL

"ALTERATION OF THIS DOCUMENT EXCEPT BY A LICENSED PROFESSIONAL IS ILLEGAL"

THESE DOCUMENTS CONTAIN POTENTIALLY SENSITIVE INFORMATION AND SHALL BE USED FOR THEIR INTENDED PURPOSE. ONCE THE INTENDED PURPOSE HAS CEASED, THE DOCUMENTS SHALL BE DESTROYED IN A SECURE MANNER.

IT IS A VIOLATION OF STATE EDUCATION LAW FOR ANY PERSON, UNLESS UNDER THE DIRECTION OF A LICENSED ARCHITECT TO ALTER THIS DOCUMENT IN ANYWAY, ALTERATIONS MUST HAVE THE SEAL AFFIXED ALONG WITH A DESCRIPTION OF THE ALTERATIONS, DATE AND ARCHITECT'S SIGNATURE. COPYRIGHT © 2012

PHASE
% SUBMISSION

Revisions

Number	Description	Date:
1		
2		
3		
4		
5		

Project Title

HEMPSTEAD LAKE STATE PARK

CONTRACT
NYSP
WORK ORDER: LI-022
CONTRACT: D004472
COA: 1290350/30377/33001/ PRK 4559

PROJECT #: NYSP-1503
DATE: JUNE 2017
DESIGNED BY: **JSR**
DRAWN BY: **JSR**
CHECKED BY: **BCS** REVIEWED BY: **GRL**

SHEET TITLE
SANITARY PLUMBING BASEMENT PLAN

SHEET #
P2.0

N:\AutoCAD Drawings\1712 Hempstead Park\DWGs\1712_P-2.0.dwg Last Modified: Jul 10, 2017 - 1:41pm Plotted on: Jul 11, 2017 - 9:57am By: jross

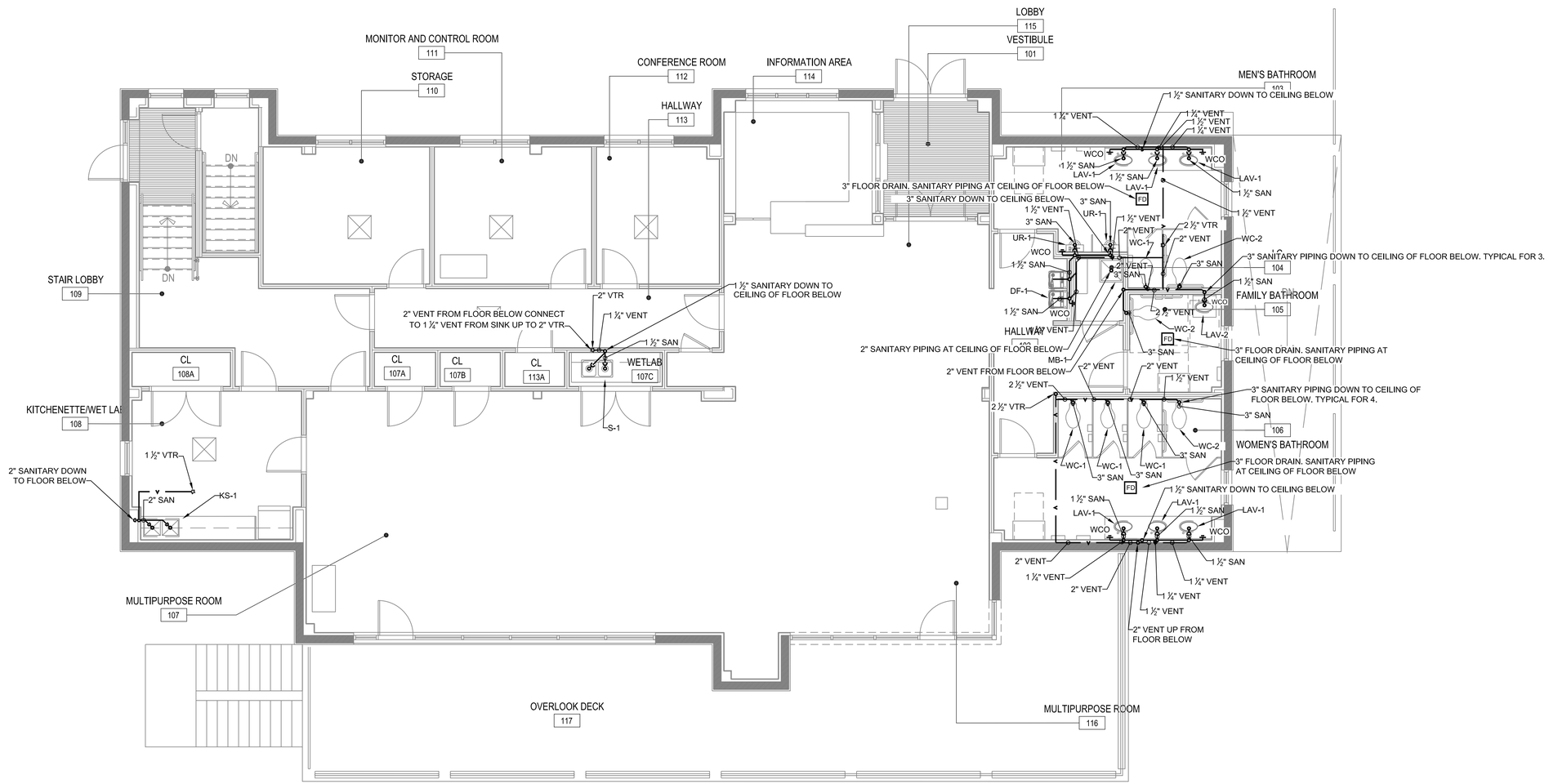

SANITARY PLUMBING FIRST FLOOR PLAN

SCALE: 1/4" = 1'-0"

NY RISING

NEW YORK STATE — Parks, Recreation and Historic Preservation

CONSULTANTS:

Stantec

H2M architects + engineers
538 Broad Hollow Road
4th Floor East
Melville, NY 11747
P:(631)754-8000
F:(631)694-4122

LKB CONSULTING ENGINEERS

Cashin Associates, P.C.

LYNSTAAR ENGINEERING, P.C.

SEAL

"ALTERATION OF THIS DOCUMENT EXCEPT BY A LICENSED PROFESSIONAL IS ILLEGAL"

THESE DOCUMENTS CONTAIN POTENTIALLY SENSITIVE INFORMATION AND SHALL BE USED FOR THEIR INTENDED PURPOSE. ONCE THE INTENDED PURPOSE HAS CEASED, THE DOCUMENTS SHALL BE DESTROYED IN A SECURE MANNER.

IT IS A VIOLATION OF STATE EDUCATION LAW FOR ANY PERSON, UNLESS UNDER THE DIRECTION OF A LICENSED ARCHITECT TO ALTER THIS DOCUMENT IN ANYWAY. ALTERATIONS MUST HAVE THE SEAL AFFIXED ALONG WITH A DESCRIPTION OF THE ALTERATIONS, DATE AND ARCHITECT'S SIGNATURE. COPYRIGHT © 2012

PHASE
% SUBMISSION

Revisions

Number	Description	Date:
1		
2		
3		
4		
5		

Project Title

HEMPSTEAD LAKE STATE PARK

CONTRACT
NYSP
WORK ORDER: LI-022
CONTRACT: D004472
COA: 1290350/30377/33001/ PRK 4559

PROJECT #: NYSP-1503
DATE: JUNE 2017
DESIGNED BY: **JSR**
DRAWN BY: **JSR**
CHECKED BY: **BCS** REVIEWED BY: **GRL**

SHEET TITLE
SANITARY PLUMBING FIRST FLOOR PLAN

SHEET #
P2.1

N:\AutoCAD Drawings\1712 Hempstead Park\DWG\1712_P-2.1.dwg Last Modified: Jul 10, 2017 - 1:06pm Plotted on: Jul 11, 2017 - 10:05am By jross

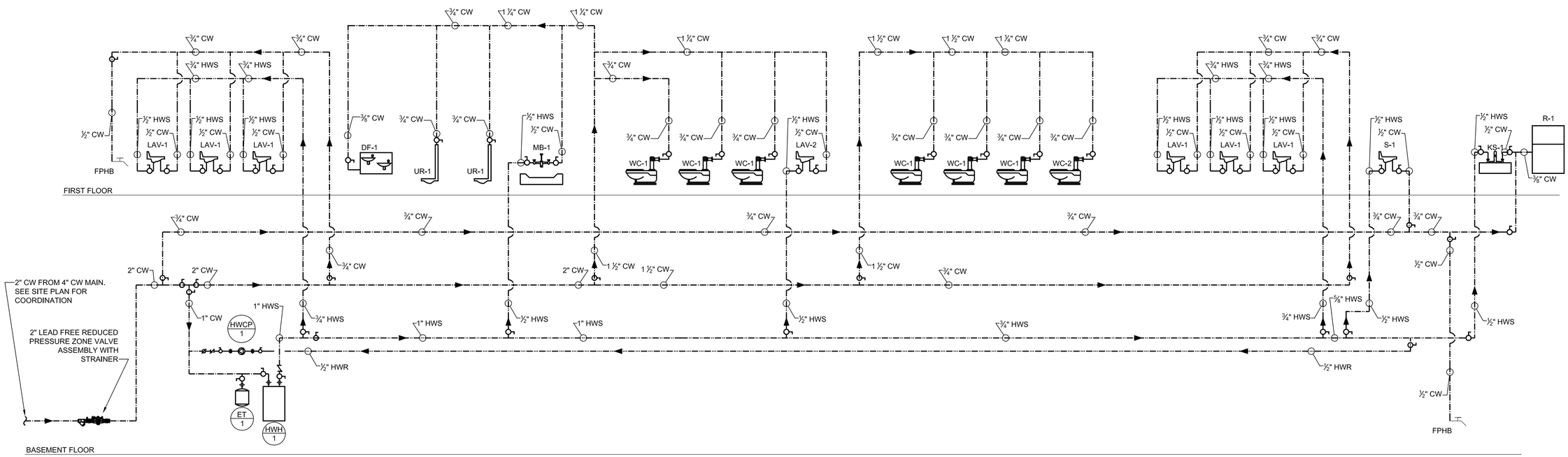

DOMESTIC RISER DETAIL

NO SCALE

NY RISING

NEW YORK STATE — Parks, Recreation and Historic Preservation

CONSULTANTS:

Stantec

H2M architects + engineers
538 Broad Hollow Road
4th Floor East
Melville, NY 11747
P:(631)756-8000
F:(631)694-4122

LKB CONSULTING ENGINEERS

Cashin Associates, P.C.

LYNSTAAR ENGINEERING, P.C.

SEAL

ALTERATION OF THIS DOCUMENT EXCEPT BY A LICENSED PROFESSIONAL IS ILLEGAL

THESE DOCUMENTS CONTAIN POTENTIALLY SENSITIVE INFORMATION AND SHALL BE USED FOR THEIR INTENDED PURPOSE. ONCE THE INTENDED PURPOSE HAS CEASED, THE DOCUMENTS SHALL BE DESTROYED IN A SECURE MANNER.

IT IS A VIOLATION OF STATE EDUCATION LAW FOR ANY PERSON, UNLESS UNDER THE DIRECTION OF A LICENSED ARCHITECT TO ALTER THIS DOCUMENT IN ANYWAY. ALTERATIONS MUST HAVE THE SEAL AFFIXED ALONG WITH A DESCRIPTION OF THE ALTERATIONS, DATE AND ARCHITECT'S SIGNATURE. COPYRIGHT © 2012

PHASE
% SUBMISSION

Revisions GRL

Number	Description	Date:
1		
2		
3	PFD	
4		
5	BCS	

Project Title

HEMPSTEAD LAKE STATE PARK

CONTRACT
NYSP
WORK ORDER: LI-022
CONTRACT: D004472
COA: 1290350/30377/33001/ PRK 4559

PROJECT #: NYSP-1503
DATE: JUNE 2017
DESIGNED BY: **JSR**
DRAWN BY: **JSR**
CHECKED BY: **BCS** REVIEWED BY: **GRL**

SHEET TITLE

DOMESTIC PLUMBING RISER

SHEET #
P3.1

N:\AutoCAD Drawings\1712 Hempstead Park\DWG\1712_P-3.0.dwg Last Modified: Jul 11, 2017 - 10:15am Plotted on: Jul 11, 2017 - 10:20am By: jross

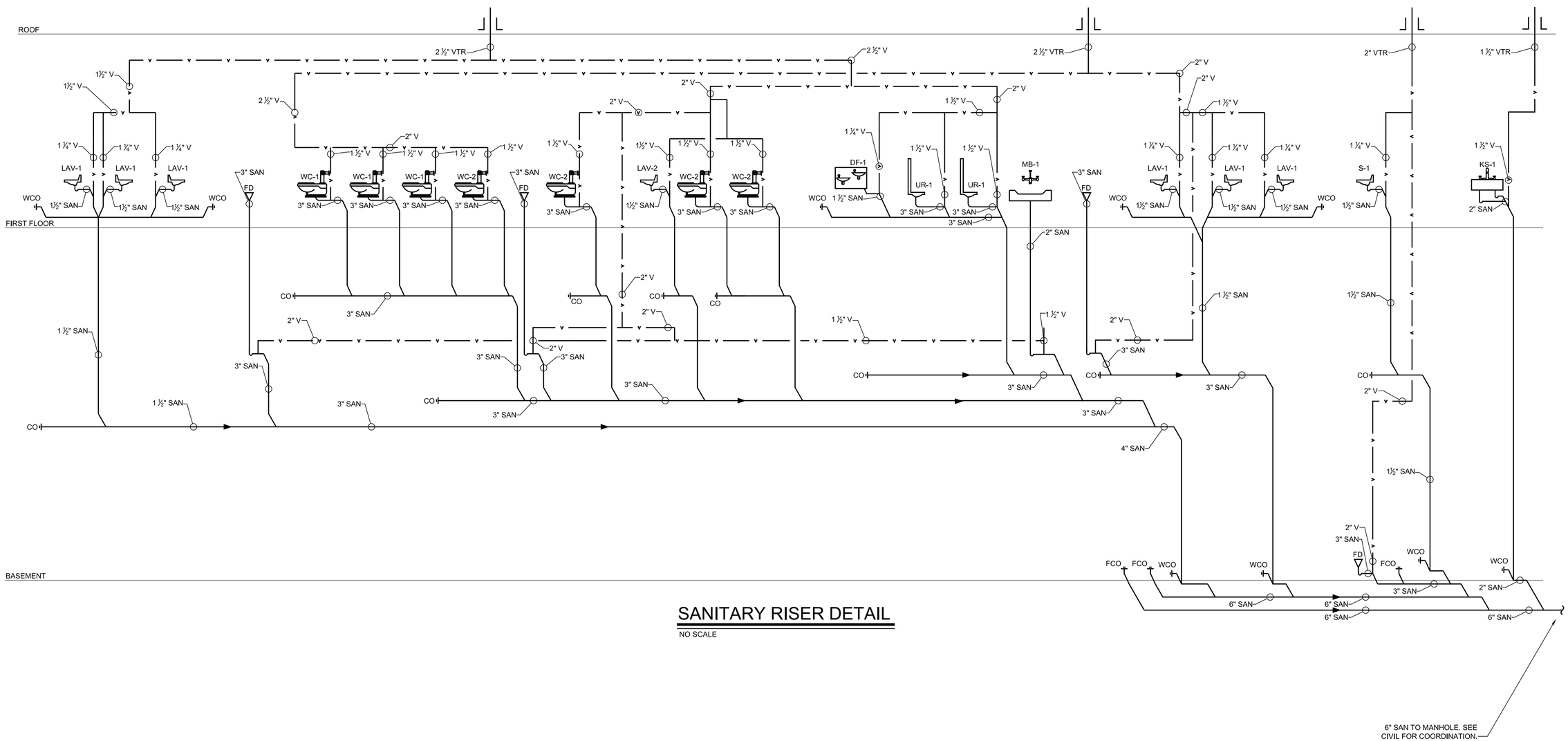

SANITARY RISER DETAIL

NO SCALE

6" SAN TO MANHOLE. SEE CIVIL FOR COORDINATION.

PFD

NEW YORK STATE Parks, Recreation and Historic Preservation

CONSULTANTS:

BCS GRL

Stantec

H2M architects + engineers
538 Broad Hollow Road
4th Floor East
Melville, NY 11747
P:(631)754-8000
F:(631)694-4122

SURVEY
DESIGN
L.A.S.P.C. LANDSCAPE ARCHITECT LAND SURVEYOR

LKB CONSULTING ENGINEERS

Cashin Associates, P.C.
ENGINEERING • PLANNING • ENVIRONMENTAL CONSULTING • CONSTRUCTION MANAGEMENT

LYNSTAAR ENGINEERING, P.C.

SEAL

"ALTERATION OF THIS DOCUMENT EXCEPT BY A LICENSED PROFESSIONAL IS ILLEGAL"

THESE DOCUMENTS CONTAIN POTENTIALLY SENSITIVE INFORMATION AND SHALL BE USED FOR THEIR INTENDED PURPOSE. ONCE THE INTENDED PURPOSE HAS CEASED, THE DOCUMENTS SHALL BE DESTROYED IN A SECURE MANNER.

IT IS A VIOLATION OF STATE EDUCATION LAW FOR ANY PERSON, UNLESS UNDER THE DIRECTION OF A LICENSED ARCHITECT TO ALTER THIS DOCUMENT IN ANYWAY. ALTERATIONS MUST HAVE THE SEAL AFFIXED ALONG WITH A DESCRIPTION OF THE ALTERATIONS, DATE AND ARCHITECT'S SIGNATURE. COPYRIGHT © 2012

PHASE
% SUBMISSION

Revisions

Number	Description	Date:
1		
2		
3		
4		
5		

Project Title

HEMPSTEAD LAKE STATE PARK

CONTRACT
NYSP
WORK ORDER: LI-022
CONTRACT: D004472
COA: 1290350/30377/33001/ PRK 4559

PROJECT #: NYSP-1503
DATE: JUNE 2017
DESIGNED BY: JSR
DRAWN BY: JSR
CHECKED BY: BCS
REVIEWED BY: GRL

SHEET TITLE

SANITARY PLUMBING RISER

SHEET #
P3.2

N:\AutoCAD Drawings\1712 Hempstead Park\DWGs\1712_P-3.0.dwg Last Modified: Jul 11, 2017 - 10:15am Plotted on: Jul 11, 2017 - 10:20am By jhoss

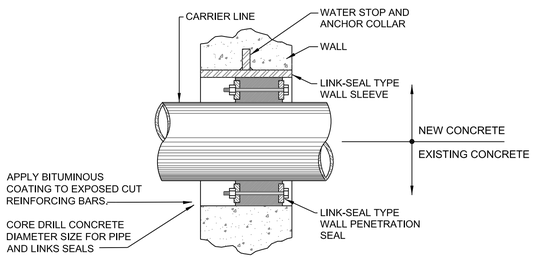

PIPE PENETRATION DETAIL FOR WALLS LESS THAN 12" THICK

NO SCALE

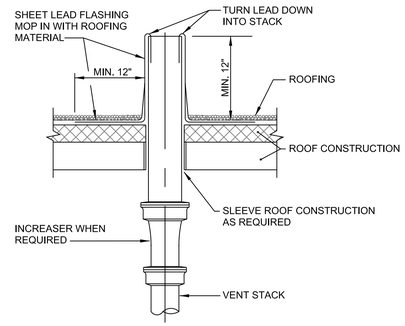

LEAD FLASHING

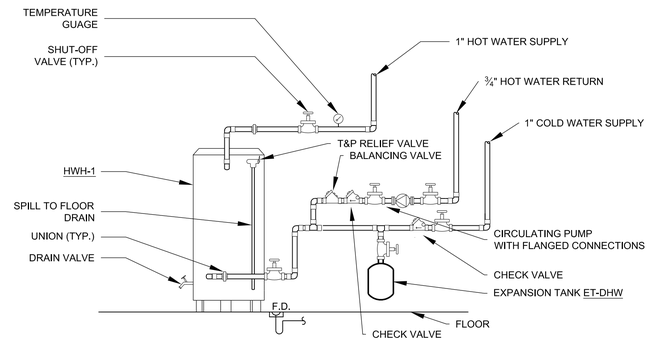

HOT WATER HEATER

NO SCALE

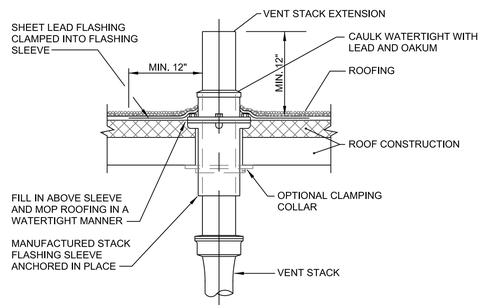

FLASHING SLEEVE

VENT THRU ROOF

NO SCALE

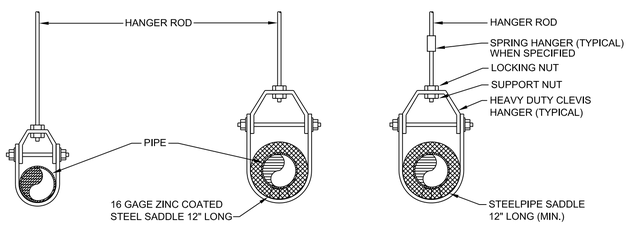

UINSULATED PIPE | INSULATED PIPE W/ VAPOR BARRIER | INSULATED PIPE W/ NO VAPOR BARRIER

TYPICAL CLEVIS HANGER SUPPORT

NO SCALE

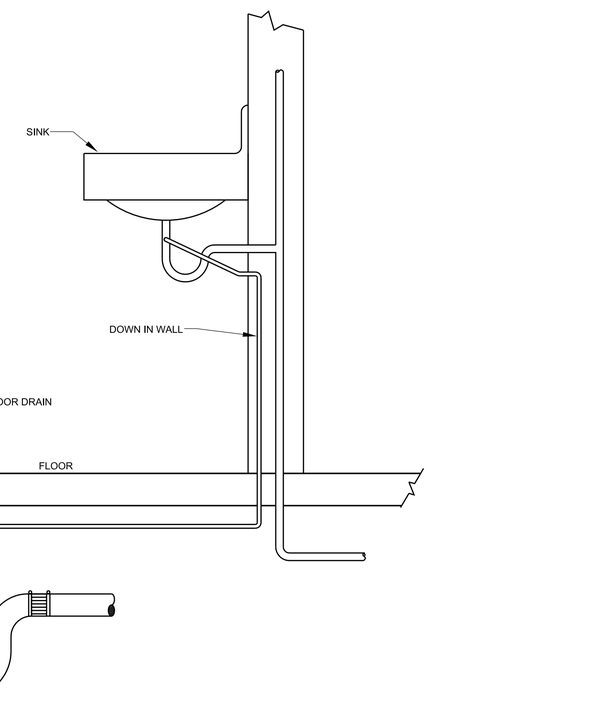

FLOOR DRAIN TRAP PRIMER DETAIL

NO SCALE

INDIVIDUAL PIPE HANGER ROD & SPACING SCHEDULE

NOMINAL PIPE OR TUBE SIZE - INCHES	3/4	1	1 1/2	2	2 1/2	3	4	5	6	8	10	12
HANGER ROD SIZES - INCHES	3/8	3/8	3/8	3/8	1/2	1/2	5/8	5/8	7/8	7/8	7/8	7/8
MAXIMUM SPACING BETWEEN PIPE SUPPORTS - FEET	6	7	9	10	11	12	14	16	17	19	22	23
MAX. SPACING BETWEEN CU. TUBE SUPPORTS - FEET	6	6	8	9	10	10	12	14	14	16	18	20

NOTES: TRAPEZE HANGER SPACING SHALL BE BASED ON SPACING OF SMALLEST PIPE ON TRAPEZE. TRAPEZE SHALL BE DESIGNED WITH A FACTOR OF SAFETY OF 5 FOR CENTER OF SPAN CONCENTRATED LOAD.

PIPE SUPPORT DETAIL

NO SCALE

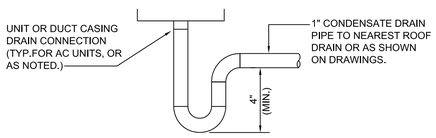

CONDENSATE DRAIN CONNECTION DETAIL

NO SCALE

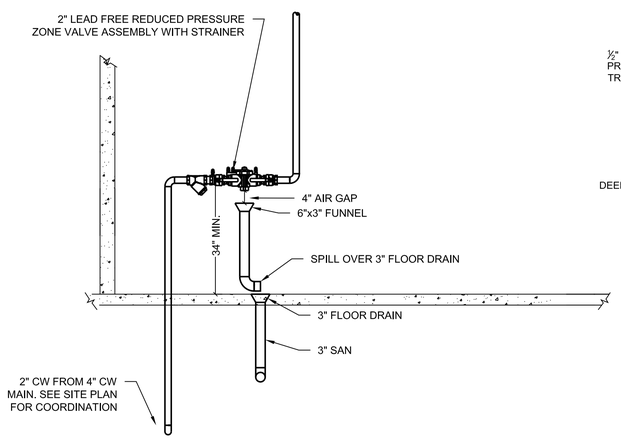

SECONDARY REDUCED PRESSURE ZONE VALVE DETAIL

NO SCALE

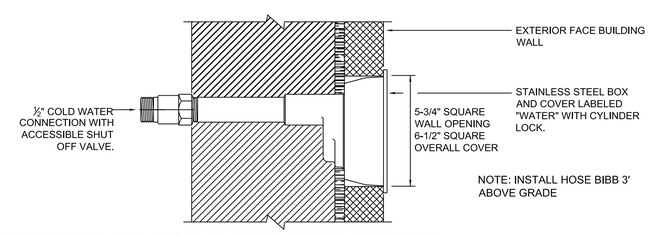

FREEZE PROOF HOSE BIBB DETAIL

NO SCALE

NY RISING

NEW YORK STATE — Parks, Recreation and Historic Preservation

CONSULTANTS:

Stantec

H2M architects + engineers
538 Broad Hollow Road
4th Floor East
Melville, NY 11747
P:(631)756-8000
F:(631)694-4122

SURVEY
DESIGN
LAND ARCHITECTURE, ARCHITECTURE, ENGINEERING

LKB CONSULTING ENGINEERS

Cashin Associates, P.C.
ENGINEERING • PLANNING • ENVIRONMENTAL • CONSTRUCTION MANAGEMENT

LYNSTAR ENGINEERING, P.C.

SEAL

PFD

BCS GRL

"ALTERATION OF THIS DOCUMENT EXCEPT BY A LICENSED PROFESSIONAL IS ILLEGAL"

THESE DOCUMENTS CONTAIN POTENTIALLY SENSITIVE INFORMATION AND SHALL BE USED FOR THEIR INTENDED PURPOSE. ONCE THE INTENDED PURPOSE HAS CEASED, THE DOCUMENTS SHALL BE DESTROYED IN A SECURE MANNER.

IT IS A VIOLATION OF STATE EDUCATION LAW FOR ANY PERSON, UNLESS UNDER THE DIRECTION OF A LICENSED ARCHITECT TO ALTER THIS DOCUMENT IN ANYWAY. ALTERATIONS MUST HAVE THE SEAL AFFIXED ALONG WITH A DESCRIPTION OF THE ALTERATIONS, DATE AND ARCHITECT'S SIGNATURE. COPYRIGHT © 2012

PHASE
% SUBMISSION

Revisions

Number	Description	Date:
1		
2		
3		
4		
5		

Project Title

HEMPSTEAD LAKE STATE PARK

CONTRACT
NYSP
WORK ORDER: LI-022
CONTRACT: D004472
COA: 1290350/30377/33001/ PRK 4559

PROJECT #: NYSP-1503
DATE: JUNE 2017
DESIGNED BY: JSR
DRAWN BY: JSR
CHECKED BY: BCS REVIEWED BY: GRL

SHEET TITLE
PLUMBING DETAILS

SHEET #
P3.0

N:\AutoCAD Drawings\1712 Hempstead Park\DWGs\1712_P-3.0.dwg Last Modified: Jul 11, 2017 - 10:15am Plotted on: Jul 11, 2017 - 10:17am By jross

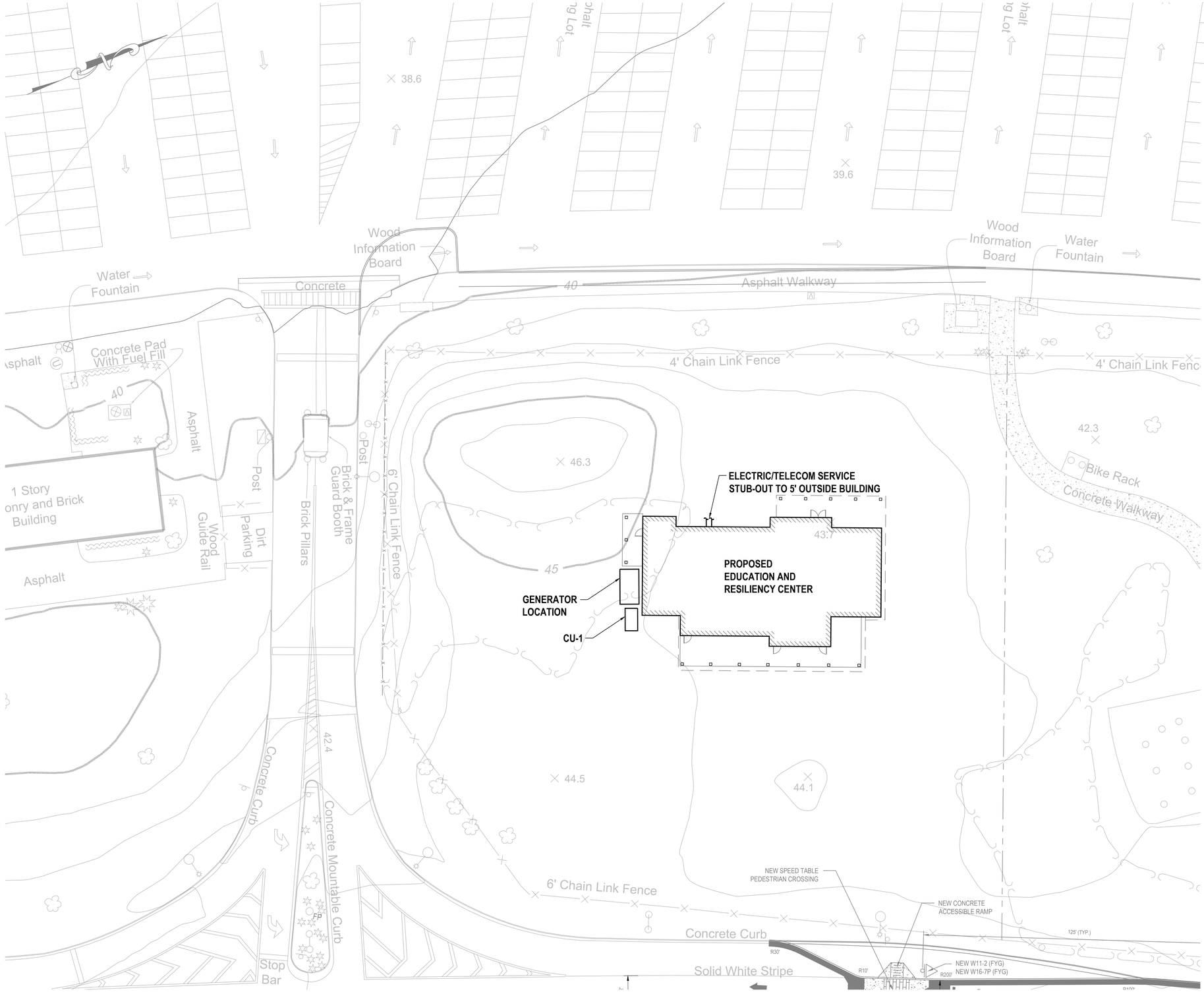

ELECTRICAL SITE PLAN

1" = 20'

LEGEND

SYMBOL	DESCRIPTION
	EQUIPMENT, DEVICE, CONDUIT, WIRE, ETC. TO BE PROVIDED AND INSTALLED
S	SINGLE POLE SWITCH
S_M	MANUAL STARTER
S_{2P}	TWO POLE SWITCH
S_3	THREE WAY SWITCH
S_4	FOUR WAY SWITCH
S_{OC}	SWITCHED OCCUPANCY SENSOR
	120V 1Ø 20A DUPLEX RECEPTACLE
2	120V 1Ø 20A QUAD RECEPTACLE
	120/208V 3Ø 4W PANELBOARD
30/--	DISCONNECT SWITCH FRAME/FUSE
J	JUNCTION BOX
	ENCLOSED CIRCUIT BREAKER
	TEL/DATA PORT
	WIREWAY 2 #12, 1 #12 GND., 3/4" C UNLESS OTHERWISE NOTED
	CIRCUIT HOMERUN 120V TO PANELBOARD
	WIREWAY- CROSSLINES INDICATE NUMBER OF CONDUCTORS WHERE MORE THAN TWO
	BEGINNING OF CIRCUIT
OC	CEILING MOUNT OCCUPANCY SENSOR
PC	LINE VOLTAGE OUTDOOR PHOTOCELL
NL	GROUND FAULT INTERRUPTER
GFI	GROUND FAULT INTERRUPTER
WP	WEATHER PROOF
NTS	NOT TO SCALE
CH	COUNTER HEIGHT
SD	SMOKE DETECTOR
SD RAL	ABOVE CEILING SMOKE DETECTOR WITH REMOTE ALARM LAMP MOUNTED ON UNDERSIDE OF CEILING
HD	HEAT DETECTOR
CO	CARBON MONOXIDE
F	PULL STATION
F	STROBE LIGHT
F	HORN/STROBE
FACP	FIRE ALARM CONTROL PANEL
FA ANN	FIRE ALARM REMOTE ANNUNCIATOR PANEL
AC 11	EQUIPMENT NAME EQUIPMENT NUMBER
PP1	POWER PACK NPP16

NOTE: ALL WORK IS NEW UNLESS OTHERWISE NOTED.

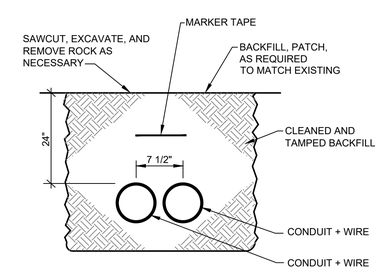

TYPICAL TRENCH DETAIL

NO SCALE

NY RISING

NEW YORK STATE Parks, Recreation and Historic Preservation

CONSULTANTS:

Stantec

H2M architects + engineers
538 Broad Hollow Road
4th Floor East
Melville, NY 11747
P:(631)756-8000
F:(631)694-4122

LKB CONSULTING ENGINEERS

Cashin Associates, P.C.
ENGINEERING - PLANNING - CONSTRUCTION MANAGEMENT

LYNSTAAR ENGINEERING, P.C.

SEAL

"ALTERATION OF THIS DOCUMENT EXCEPT BY A LICENSED PROFESSIONAL IS ILLEGAL"

THESE DOCUMENTS CONTAIN POTENTIALLY SENSITIVE INFORMATION AND SHALL BE USED FOR THEIR INTENDED PURPOSE. ONCE THE INTENDED PURPOSE HAS CEASED, THE DOCUMENTS SHALL BE DESTROYED IN A SECURE MANNER.

IT IS A VIOLATION OF STATE EDUCATION LAW FOR ANY PERSON, UNLESS UNDER THE DIRECTION OF A LICENSED ARCHITECT TO ALTER THIS DOCUMENT IN ANYWAY. ALTERATIONS MUST HAVE THE SEAL AFFIXED ALONG WITH A DESCRIPTION OF THE ALTERATIONS, DATE AND ARCHITECT'S SIGNATURE. COPYRIGHT © 2012

PHASE
% SUBMISSION

Revisions

Number	Description	Date:
1		
2		
3		
4		
5		

Project Title

HEMPSTEAD LAKE STATE PARK

CONTRACT
NYSP
WORK ORDER: LI-022
CONTRACT: D004472
COA: 1290350/30377/33001/ PRK 4559

PROJECT #: NYSP-1503
DATE: JUNE 2017
DESIGNED BY:
DRAWN BY: GD
CHECKED BY: JD
REVIEWED BY: GRL

SHEET TITLE
ELECTRICAL SITE PLAN, LEGEND & DETAILS

SHEET #
E0.0

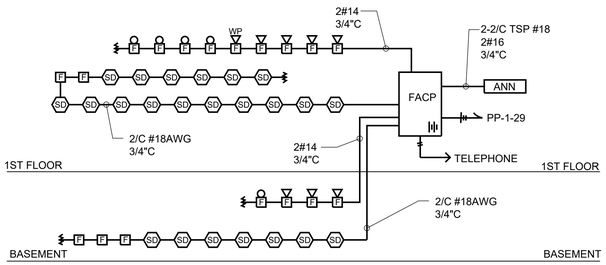

FIRE ALARM SINGLE LINE RISER DIAGRAM

NO SCALE

PANELBOARD PP-1 SCHEDULE

MAIN BUS RATINGS: 400A, 120/208 VOLTS, 3 PHASE, 4 WIRE
MINIMUM SHORTCIRCUIT INTERRUPTION RATING: 22,000 AIC
MAIN BREAKER TRIP: 300 A
ESTIMATED CONNECTED LOAD: 77KW

FED FROM: ATS 1
INCOMING FEED: 4-350KCMIL
ENCLOSURE: NEMA 1

DESCRIPTION	LOAD KW	CB TRIP/POLE	CIR. NO	A B C	CIR. NO	CB TRIP/POLE	LOAD KW	DESCRIPTION
SF-1	.69	20A/1P	1		2	75A/3P	16.2	CU-1
OFFICE ACU'S 5,6,7,8,9 BCC-3	.2	20A/2P	3		4			
			5		6			
SHOW ROOM ACU 1,2,3,4 BCC-2	.8	20A/2P	7		8	75A/3P	16.2	CU-1
			9		10			
BASEMENT ACU 10, 11 BCC-1	.1	20A/1P	11		12			
			13		14	20A/1P	.75	STAIR HEATER RP-1
HWH-1	9	40A/3P	15		16	20A/1P	.75	STAIR HEATER RP-2
			17		18	20A/1P	.75	MENS BATH HEATER RP-4
			19		20	20A/1P	.75	WOMENS BATH HEATER RP-6
EF-1	.69	20A/1P	21		22	20A/1P	.75	FAMILY BATH HEATER RP-5
ERU-1	.36	15A/1P	23		24	20A/1P	1.5	VESTIBULE HEATERS RP-3
BLOCK HEATER	1.5	20A/1P	25		26	20A/1P		HVAC BMS
BATTERY CHARGER	.2	20A/1P	27		28	20A/1P		HWCP-1
FACP	.5	20A/1P	29		30	20A/1P		SPARE
UH-1	3	20A/2P	31		32	20A/1P		SPARE
			33		34	20A/1P		SPARE
SPARE		20A/1P	35		36	20A/1P		SPARE
PP-3		60A/3P	37		38	100A/3P	22	PP-2
			39		40			
			41		42			

PANELBOARD PP-2 SCHEDULE

MAIN BUS RATINGS: 125A, 120/208 VOLTS, 3 PHASE, 4 WIRE
MINIMUM SHORTCIRCUIT INTERRUPTION RATING: 10,000 AIC
MAIN BREAKER TRIP: 100A
ESTIMATED CONNECTED LOAD: 22KW

FED FROM: PP-1
INCOMING FEED: 4#3
ENCLOSURE: NEMA 1

DESCRIPTION	LOAD KW	CB TRIP/POLE	CIR. NO	A B C	CIR. NO	CB TRIP/POLE	LOAD KW	DESCRIPTION
PANTRY FRIDGE	.4	20A/1P	1		2	20A/1P	1.2	UTILITY RM RECEPTACLES
PANTRY GFCI	.18	20A/1P	3		4	20A/1P	1.2	UTILITY RM RECEPTACLES
FLOOR MAINTENANCE	.9	20A/1P	5		6	20A/1P	.72	RECEPTION RECEP
FLOOR MAINTENANCE	.36	20A/1P	7		8	20A/1P	1.2	OFFICE RECEP
BALCONY GFCI	.54	20A/1P	9		10	20A/1P	1.2	OFFICE RECEP
OFFICE LTG	.72	15A/1P	11		12	20A/1P	.9	SHOW RM RECEP
BATHROOM LTG	.4	15A/1P	13		14	20A/1P	.36	BATH GFI'S
SHOWROOM LTG	1	15A/1P	15		16	20A/1P	.72	BATH GFI'S
BASEMENT LIGHTING	.6	15A/1P	17		18	20A/1P	1	DRINKING FOUNTAIN
STAIRWAY LIGHTING	.3	15A/1P	19		20	20A/1P	1	DRINKING FOUNTAIN
OUTDOOR LTG	.1	15A/1P	21		22	20A/1P	1.4	DYSON DRYER
OUTDOOR LTG	.1	15A/1P	23		24	20A/1P	1.4	DYSON DRYER
BASEMENT LIGHTING	.35	15A/1P	25		26	20A/1P	1.4	DYSON DRYER
ROOF GFCI	.36	20A/1P	27		28	20A/1P	1.4	DYSON DRYER
NIGHT LIGHTS	.2	20A/1P	29		30	20A/1P	1.1	MIROWAVE
SPARE		20A/1P	31		32	20A/1P		SPARE
SPARE		20A/1P	33		34	20A/1P		SPARE
SPARE		20A/1P	35		36	20A/1P		SPARE
SPARE		20A/1P	37		38	20A/1P		SPARE
SPARE		20A/1P	39		40	20A/1P		SPARE
SPARE		20A/1P	41		42	20A/1P		SPARE

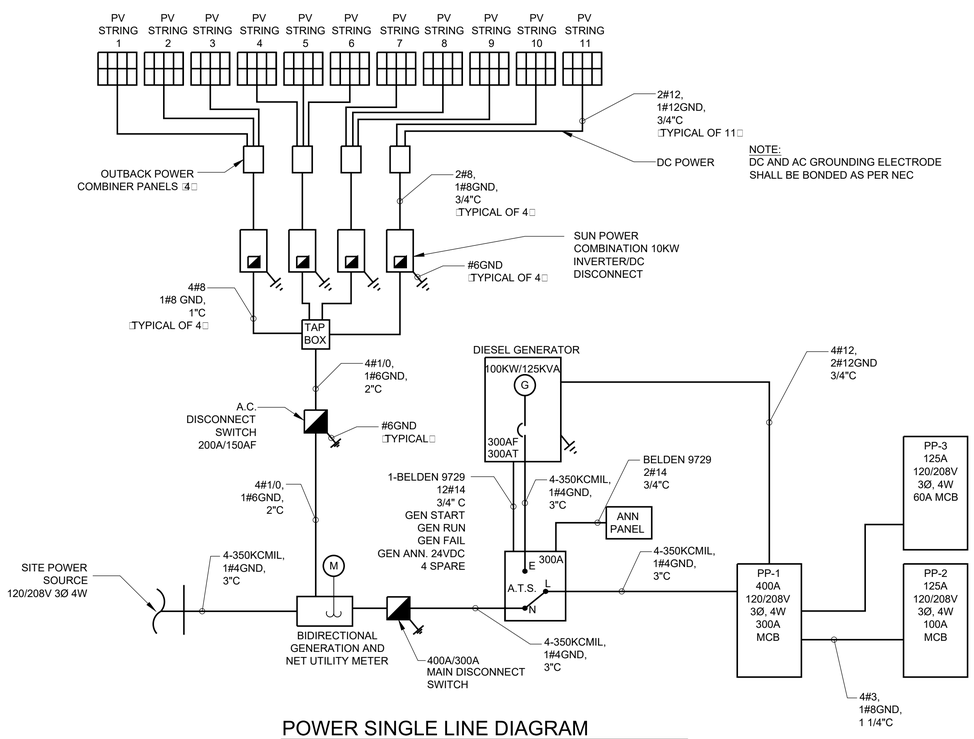

POWER SINGLE LINE DIAGRAM

NO SCALE

SCHEDULE OF LIGHTING FIXTURES

TYPE	LAMPS WATTS	MOUNTING	VOLTAGE	FIXTURE MANUFACTURER AND CATALOG NUMBER	REMARKS
A	30W	CEILING	120V	LCAT 2X2 LED	3500K TEMPERATURE ML LUMEN PACKAGE
B	48W	SUSPEND	120V	COLUMBIA LIGHTING LCL LED	4000K, COORDINATE LENGTH WITH ARCH. MEDIUM LUMENS
C	32W	SURFACE	120V	METALUX AP 2X2 LED FLAT PANEL	2'X2' SURFACE LED PANEL, 3400 LUMEN 3500K, 0-10V DIMMABLE
D	46W	PENDANT	120V	LUMENWERX VIA 4 LED	4000K, MEDIUM LUMEN, LENGTH AND FINISH BY ARCHITECT
F	22W	SURFACE	120V	LUMENWERX VIA 2 PLUS LED	4000K, COORDINATE LENGTH AND FINISH BY ARCHITECT
G	15W	FLUSH	120V	ACULUS LENSED DOWNLIGHT REFLECTOR 2" SQUARE TRIMS LED	2" SQUARE TRIMS FINISH BY ARCHITECT
H	14W	FLUSH	120V	JUNO LIGHTING INDY SDSQ6 SERIES WET LOCATION TRIM LED	1100 LUMENS, 3500K

EXIT COMPASS CEL SERIES EDGE-LIT LED EMERGENCY EXIT SIGN WITH EMERGENCY BATTERY PACK AND GREEN LETTERS

B LITHONIA QUANTUM DUAL VOLTAGE, ELM4

NY RISING

NEW YORK STATE Parks, Recreation and Historic Preservation

CONSULTANTS:

Stantec

H2M architects + engineers
538 Broad Hollow Road
4th Floor East
Melville, NY 11747
P:(631)756-8000
F:(631)694-4122

LKB CONSULTING ENGINEERS

Cashin Associates, P.C.

LYNSTAAR ENGINEERING, P.C.

SEAL

"ALTERATION OF THIS DOCUMENT EXCEPT BY A LICENSED PROFESSIONAL IS ILLEGAL"

THESE DOCUMENTS CONTAIN POTENTIALLY SENSITIVE INFORMATION AND SHALL BE USED FOR THEIR INTENDED PURPOSE. ONCE THE INTENDED PURPOSE HAS CEASED, THE DOCUMENTS SHALL BE DESTROYED IN A SECURE MANNER.

IT IS A VIOLATION OF STATE EDUCATION LAW FOR ANY PERSON, UNLESS UNDER THE DIRECTION OF A LICENSED ARCHITECT TO ALTER THIS DOCUMENT IN ANYWAY. ALTERATIONS MUST HAVE THE SEAL AFFIXED ALONG WITH A DESCRIPTION OF THE ALTERATIONS, DATE AND ARCHITECT'S SIGNATURE. COPYRIGHT © 2012

PHASE
% SUBMISSION

Revisions

Number	Description	Date:
1		
2		
3		
4		
5		

Project Title

HEMPSTEAD LAKE STATE PARK

CONTRACT
NYSP
WORK ORDER: LI-022
CONTRACT: D004472
COA: 1290350/30377/33001/ PRK 4559

PROJECT #: NYSP-1503
DATE: JUNE 2017
DESIGNED BY:
DRAWN BY: GD
CHECKED BY: JD
REVIEWED BY: GRL

SHEET TITLE
ELECTRICAL SINGLE LINE DIAGRAM & SCHEDULES

SHEET #
E1.0

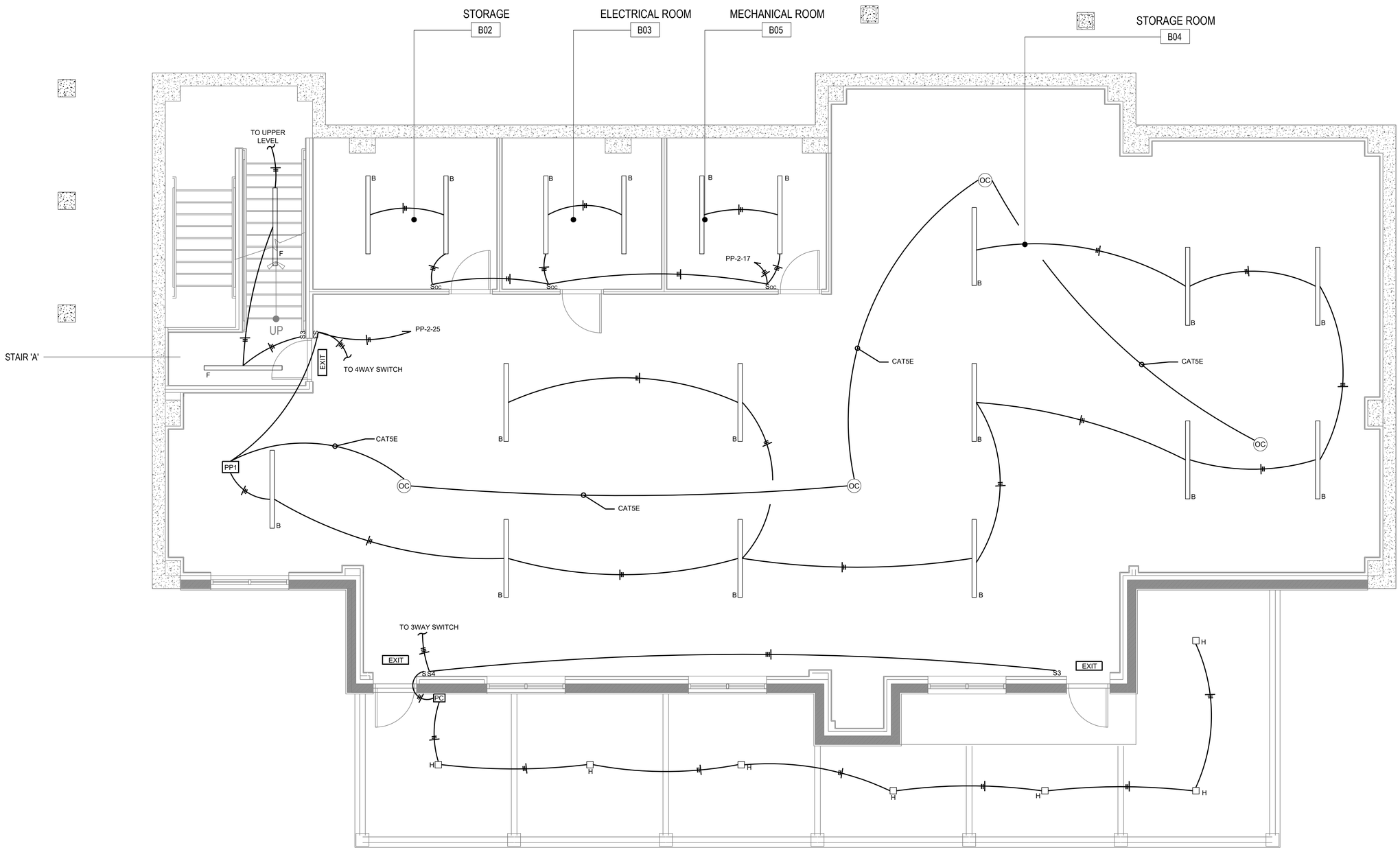

ELECTRICAL BASEMENT LIGHTING PLAN

SCALE: 1/4" = 1'-0"

NY RISING

NEW YORK STATE Parks, Recreation and Historic Preservation

CONSULTANTS:

Stantec

H2M architects + engineers
538 Broad Hollow Road
4th Floor East
Melville, NY 11747
P:(631)756-0000
F:(631)694-4122

SIDNEY DESIGN LLA PC LANDSCAPE ARCHITECTURE PC

LKB CONSULTING ENGINEERS

Cashin Associates, P.C.
ENGINEERING - PLANNING - CONSTRUCTION MANAGEMENT

LYNSTAAR ENGINEERING, P.C.

SEAL

"ALTERATION OF THIS DOCUMENT EXCEPT BY A LICENSED PROFESSIONAL IS ILLEGAL"

THESE DOCUMENTS CONTAIN POTENTIALLY SENSITIVE INFORMATION AND SHALL BE USED FOR THEIR INTENDED PURPOSE. ONCE THE INTENDED PURPOSE HAS CEASED, THE DOCUMENTS SHALL BE DESTROYED IN A SECURE MANNER.

IT IS A VIOLATION OF STATE EDUCATION LAW FOR ANY PERSON, UNLESS UNDER THE DIRECTION OF A LICENSED ARCHITECT TO ALTER THIS DOCUMENT IN ANYWAY. ALTERATIONS MUST HAVE THE SEAL AFFIXED ALONG WITH A DESCRIPTION OF THE ALTERATIONS, DATE AND ARCHITECT'S SIGNATURE. COPYRIGHT © 2012

PHASE
% SUBMISSION

Revisions

Number	Description	Date:
1		
2		
3		
4		
5		

Project Title

HEMPSTEAD LAKE STATE PARK

CONTRACT
NYSP
WORK ORDER: LI-022
CONTRACT: D004472
COA: 1290350/30377/33001/ PRK 4559

PROJECT #: NYSP-1503
DATE: JUNE 2017
DESIGNED BY:
DRAWN BY: GD
CHECKED BY: JD
REVIEWED BY: GRL

SHEET TITLE
ELECTRICAL BASEMENT LIGHTING PLAN

SHEET #
E2.0

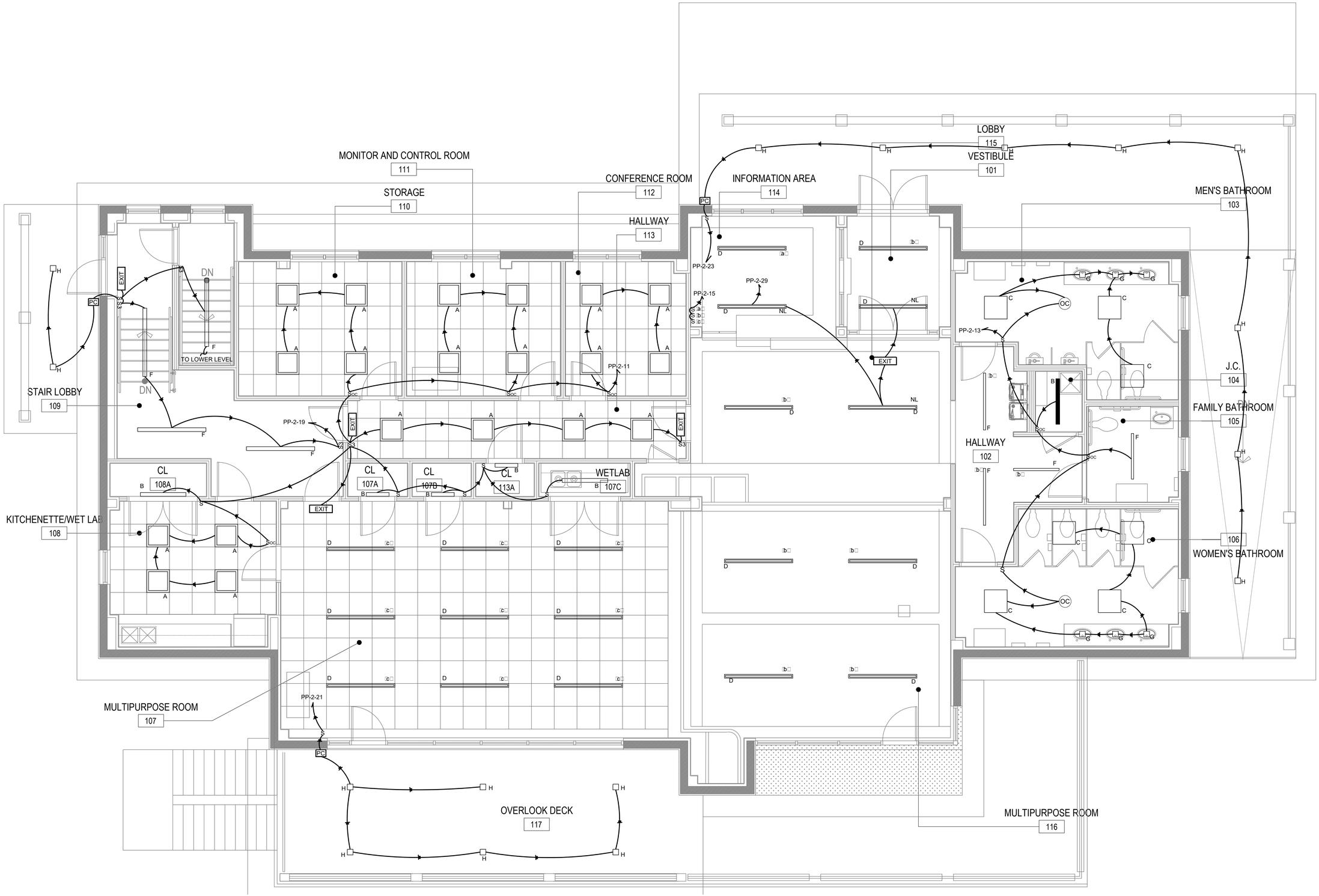

ELECTRICAL FIRST FLOOR LIGHTING PLAN

SCALE: 1/4" = 1'-0"

NY RISING

NEW YORK STATE Parks, Recreation and Historic Preservation

CONSULTANTS:

Stantec

H2M architects + engineers
538 Broad Hollow Road
4th Floor East
Melville, NY 11747
P:(631)756-0000
F:(631)694-4122

LKB CONSULTING ENGINEERS

Cashin Associates, P.C.

LYNSTAAR ENGINEERING, P.C.

SEAL

"ALTERATION OF THIS DOCUMENT EXCEPT BY A LICENSED PROFESSIONAL IS ILLEGAL"

THESE DOCUMENTS CONTAIN POTENTIALLY SENSITIVE INFORMATION AND SHALL BE USED FOR THEIR INTENDED PURPOSE. ONCE THE INTENDED PURPOSE HAS CEASED, THE DOCUMENTS SHALL BE DESTROYED IN A SECURE MANNER.

IT IS A VIOLATION OF STATE EDUCATION LAW FOR ANY PERSON, UNLESS UNDER THE DIRECTION OF A LICENSED ARCHITECT TO ALTER THIS DOCUMENT IN ANYWAY. ALTERATIONS MUST HAVE THE SEAL AFFIXED ALONG WITH A DESCRIPTION OF THE ALTERATIONS, DATE AND ARCHITECT'S SIGNATURE. COPYRIGHT © 2012

PHASE

% SUBMISSION

Revisions

Number	Description	Date:
1		
2		
3		
4		
5		

Project Title

HEMPSTEAD LAKE STATE PARK

CONTRACT

NYSP
WORK ORDER: LI-022
CONTRACT: D004472
COA: 1290350/30377/33001/ PRK 4559

PROJECT #: NYSP-1503

DATE: JUNE 2017

DESIGNED BY:

DRAWN BY: GD

CHECKED BY: JD

REVIEWED BY: GRL

SHEET TITLE

ELECTRICAL FIRST FLOOR LIGHTING PLAN

SHEET #

E2.1

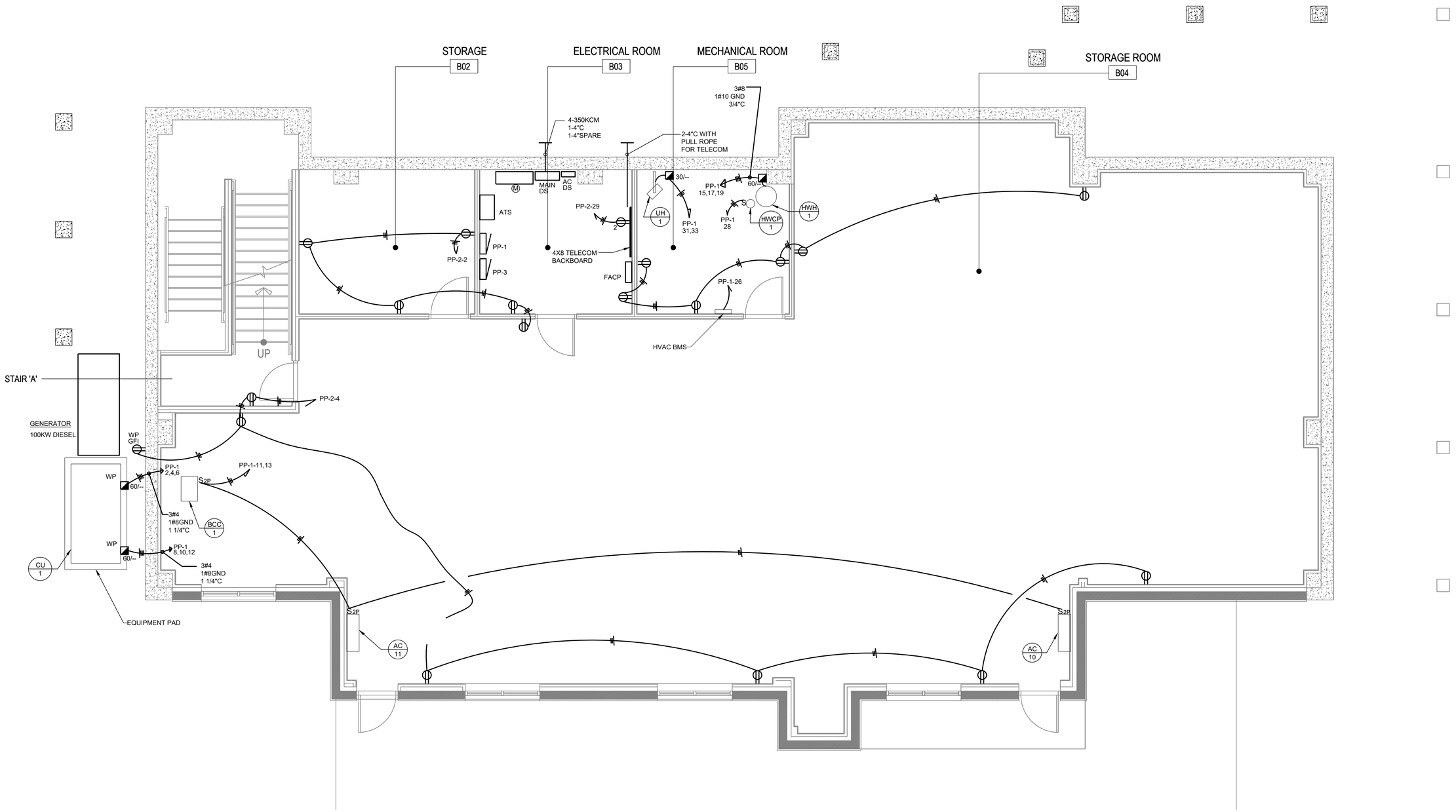

BASEMENT POWER PLAN

SCALE: 1/4" = 1'-0"

NY RISING

NEW YORK STATE | Parks, Recreation and Historic Preservation

CONSULTANTS:

Stantec

H2M architects + engineers
538 Broad Hollow Road
4th Floor East
Melville, NY 11747
P:(631)756-8000
F:(631)694-4122

KIDNEY DESIGN
LA & PC LANDSCAPE ARCHITECTURE PC

LKB CONSULTING ENGINEERS

Cashin Associates, P.C.
ENGINEERING - PLANNING - CONSTRUCTION MANAGEMENT

LYNSTAAR ENGINEERING, P.C.

SEAL

"ALTERATION OF THIS DOCUMENT EXCEPT BY A LICENSED PROFESSIONAL IS ILLEGAL"

THESE DOCUMENTS CONTAIN POTENTIALLY SENSITIVE INFORMATION AND SHALL BE USED FOR THEIR INTENDED PURPOSE. ONCE THE INTENDED PURPOSE HAS CEASED, THE DOCUMENTS SHALL BE DESTROYED IN A SECURE MANNER.

IT IS A VIOLATION OF STATE EDUCATION LAW FOR ANY PERSON, UNLESS UNDER THE DIRECTION OF A LICENSED ARCHITECT TO ALTER THIS DOCUMENT IN ANYWAY. ALTERATIONS MUST HAVE THE SEAL AFFIXED ALONG WITH A DESCRIPTION OF THE ALTERATIONS, DATE AND ARCHITECT'S SIGNATURE. COPYRIGHT © 2012

PHASE
% SUBMISSION

Revisions

Number	Description	Date:
1		
2		
3		
4		
5		

Project Title

HEMPSTEAD LAKE STATE PARK

CONTRACT
NYSP
WORK ORDER: LI-022
CONTRACT: D004472
COA: 1290350/30377/33001/ PRK 4559

PROJECT #: NYSP-1503
DATE: JUNE 2017
DESIGNED BY:
DRAWN BY: GD
CHECKED BY: JD
REVIEWED BY: GRL

SHEET TITLE
ELECTRICAL BASEMENT POWER PLAN

SHEET #
E3.0

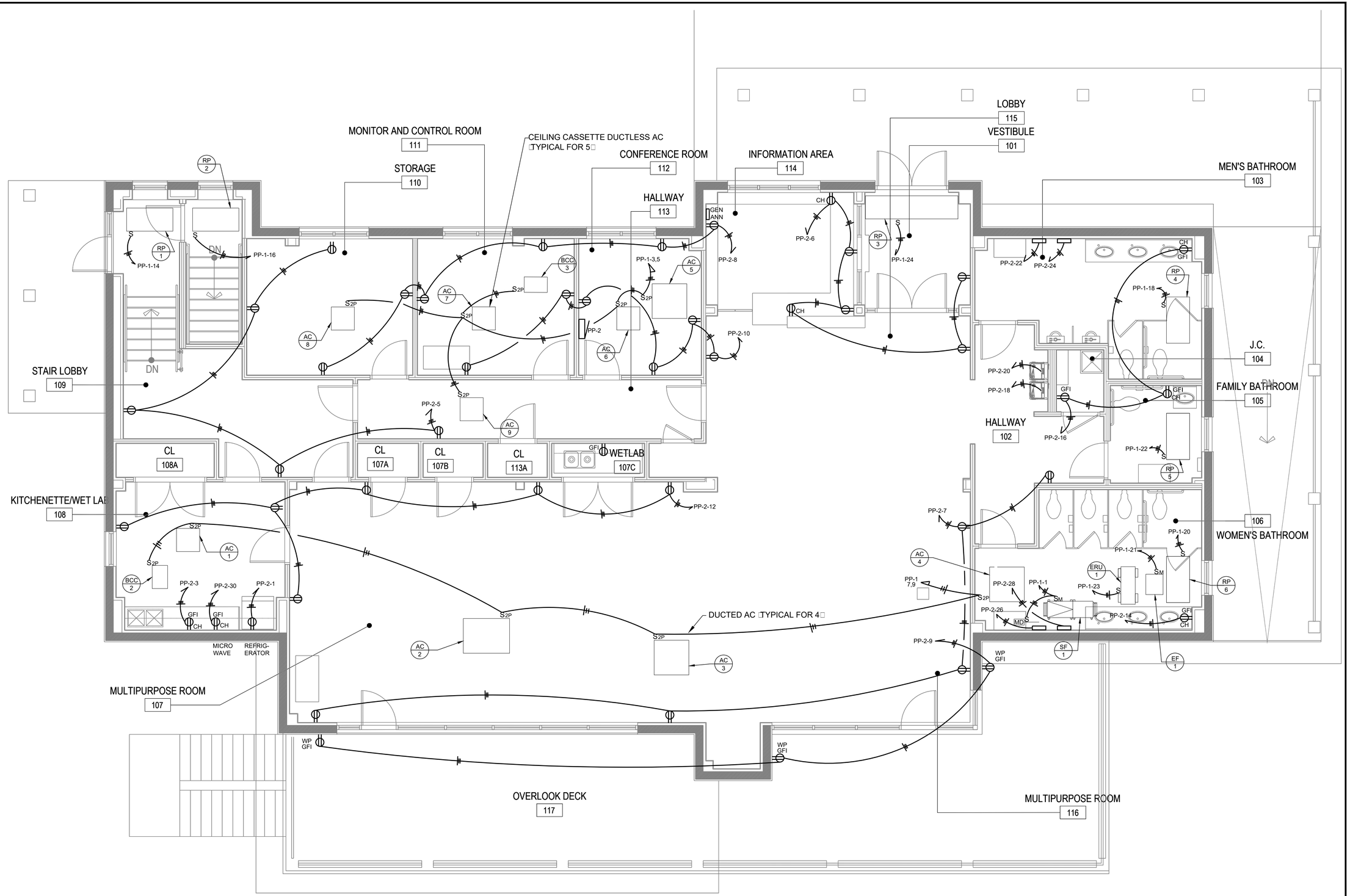

ELECTRICAL FIRST FLOOR PLAN

SCALE: 1/4" = 1'-0"

N

NY RISING

NEW YORK STATE Parks, Recreation and Historic Preservation

CONSULTANTS:

Stantec

H2M architects + engineers
538 Broad Hollow Road
4th Floor East
Melville, NY 11747
P:(631)756-8000
F:(631)694-4122

LKB CONSULTING ENGINEERS

Cashin Associates, P.C.
ENGINEERING - PLANNING - ENVIRONMENTAL - CONSTRUCTION MANAGEMENT

LYNSTAAR ENGINEERING, P.C.

SEAL

"ALTERATION OF THIS DOCUMENT EXCEPT BY A LICENSED PROFESSIONAL IS ILLEGAL"

THESE DOCUMENTS CONTAIN POTENTIALLY SENSITIVE INFORMATION AND SHALL BE USED FOR THEIR INTENDED PURPOSE. ONCE THE INTENDED PURPOSE HAS CEASED, THE DOCUMENTS SHALL BE DESTROYED IN A SECURE MANNER.

IT IS A VIOLATION OF STATE EDUCATION LAW FOR ANY PERSON, UNLESS UNDER THE DIRECTION OF A LICENSED ARCHITECT TO ALTER THIS DOCUMENT IN ANYWAY. ALTERATIONS MUST HAVE THE SEAL AFFIXED ALONG WITH A DESCRIPTION OF THE ALTERATIONS, DATE AND ARCHITECT'S SIGNATURE. COPYRIGHT © 2012

PHASE

% SUBMISSION

Revisions

Number	Description	Date:
1		
2		
3		
4		
5		

Project Title

HEMPSTEAD LAKE STATE PARK

CONTRACT

NYSP
WORK ORDER: LI-022
CONTRACT: D004472
COA: 1290350/30377/33001/ PRK 4559

PROJECT #: NYSP-1503

DATE: JUNE 2017

DESIGNED BY:

DRAWN BY: GD

CHECKED BY: JD

REVIEWED BY: GRL

SHEET TITLE

ELECTRICAL FIRST FLOOR POWER PLAN

SHEET #

E3.1

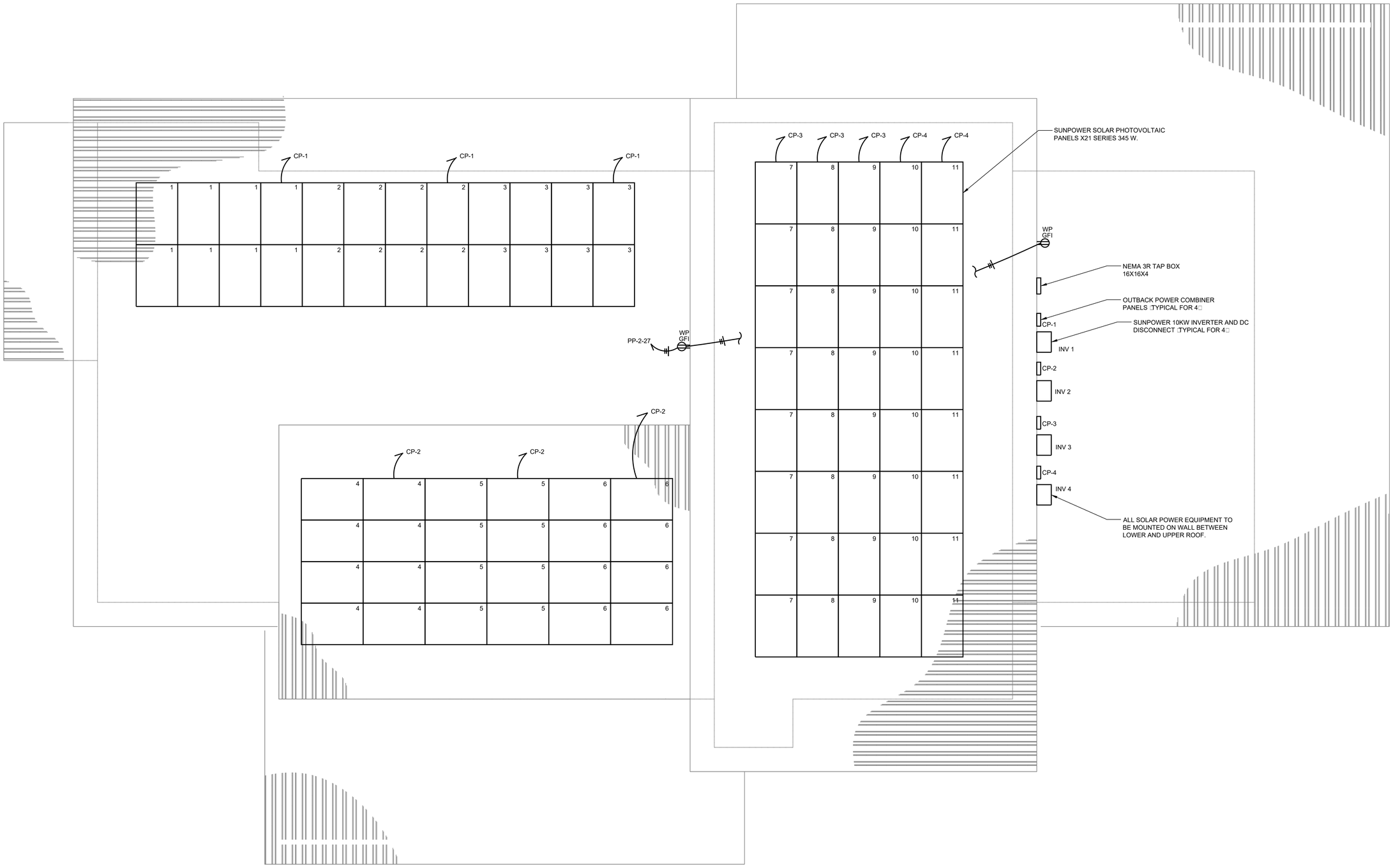

ELECTRICAL ROOF FLOOR PLAN

SCALE: 1/4" = 1'-0"

NY RISING

NEW YORK STATE Parks, Recreation and Historic Preservation

CONSULTANTS:

Stantec

H2M architects + engineers
538 Broad Hollow Road
4th Floor East
Melville, NY 11747
P:(631)756-0000
F:(631)694-4122

SIDNEY DESIGN
LA & PC LANDSCAPE ARCHITECTURE PC

LKB CONSULTING ENGINEERS

Cashin Associates, P.C.
ENGINEERING - PLANNING - CONSTRUCTION MANAGEMENT

LYNSTAAR ENGINEERING, P.C.

SEAL

"ALTERATION OF THIS DOCUMENT EXCEPT BY A LICENSED PROFESSIONAL IS ILLEGAL"

THESE DOCUMENTS CONTAIN POTENTIALLY SENSITIVE INFORMATION AND SHALL BE USED FOR THEIR INTENDED PURPOSE. ONCE THE INTENDED PURPOSE HAS CEASED, THE DOCUMENTS SHALL BE DESTROYED IN A SECURE MANNER.

IT IS A VIOLATION OF STATE EDUCATION LAW FOR ANY PERSON, UNLESS UNDER THE DIRECTION OF A LICENSED ARCHITECT TO ALTER THIS DOCUMENT IN ANYWAY. ALTERATIONS MUST HAVE THE SEAL AFFIXED ALONG WITH A DESCRIPTION OF THE ALTERATIONS, DATE AND ARCHITECT'S SIGNATURE. COPYRIGHT © 2012

PHASE
% SUBMISSION

Revisions

Number	Description	Date:
1		
2		
3		
4		
5		

Project Title

HEMPSTEAD LAKE STATE PARK

CONTRACT
NYSP
WORK ORDER: LI-022
CONTRACT: D004472
COA: 1290350/30377/33001/ PRK 4559

PROJECT #: NYSP-1503
DATE: JUNE 2017
DESIGNED BY:
DRAWN BY: GD
CHECKED BY: JD
REVIEWED BY: GRL

SHEET TITLE
ELECTRICAL ROOF POWER PLAN

SHEET #
E3.2

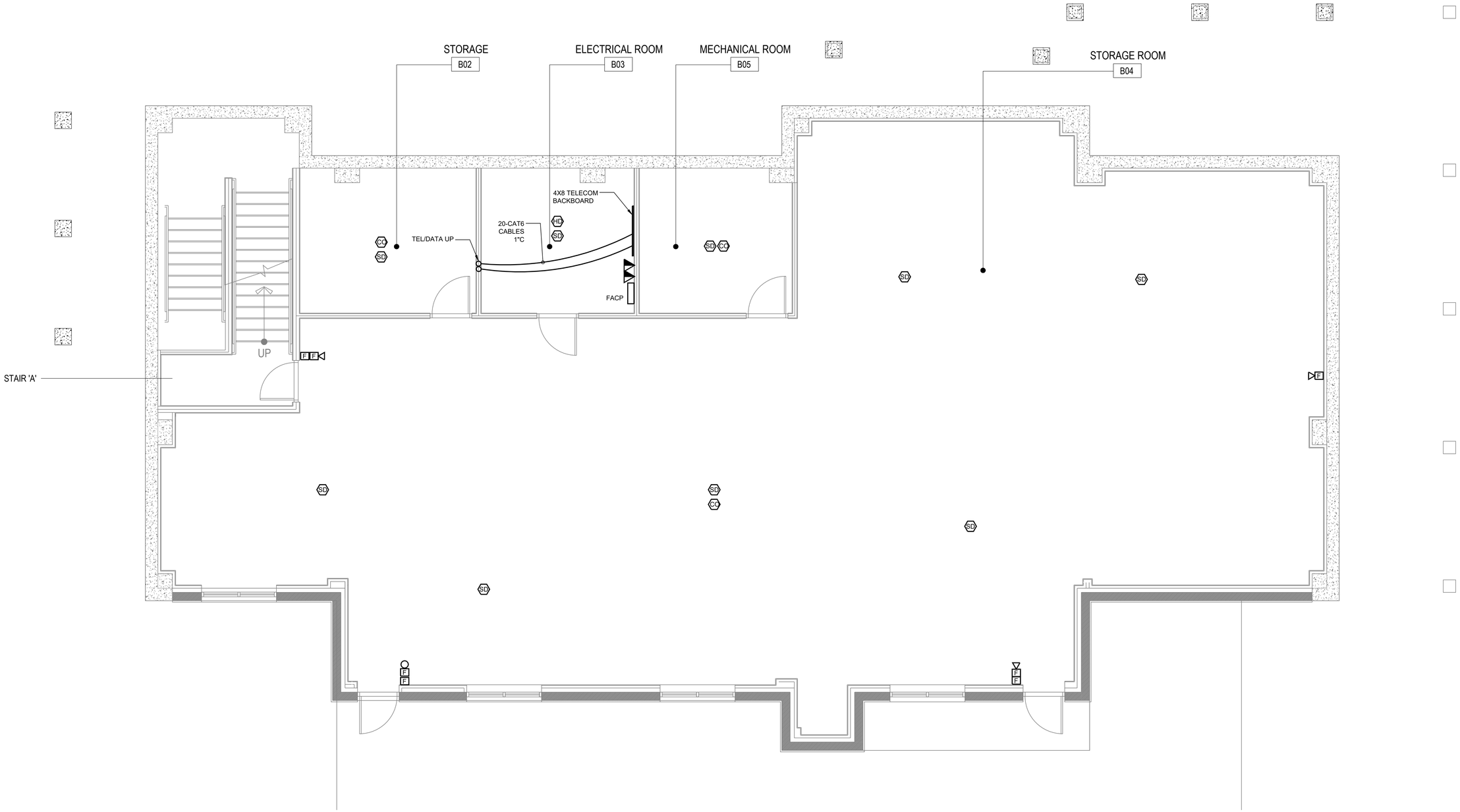

ELECTRICAL BASEMENT SIGNAL PLAN

SCALE: 1/4" = 1'-0"

NY RISING

NEW YORK STATE | Parks, Recreation and Historic Preservation

CONSULTANTS:

Stantec

H2M architects + engineers
538 Broad Hollow Road
4th Floor East
Melville, NY 11747
P:(631)756-0000
F:(631)694-4122

SIDNEY DESIGN LA & PC LANDSCAPE ARCHITECTURE PC

LKB CONSULTING ENGINEERS

Cashin Associates, P.C.
ENGINEERING - PLANNING - ENVIRONMENTAL - CONSTRUCTION MANAGEMENT

LYNSTAAR ENGINEERING, P.C.

SEAL

"ALTERATION OF THIS DOCUMENT EXCEPT BY A LICENSED PROFESSIONAL IS ILLEGAL"

THESE DOCUMENTS CONTAIN POTENTIALLY SENSITIVE INFORMATION AND SHALL BE USED FOR THEIR INTENDED PURPOSE. ONCE THE INTENDED PURPOSE HAS CEASED, THE DOCUMENTS SHALL BE DESTROYED IN A SECURE MANNER.

IT IS A VIOLATION OF STATE EDUCATION LAW FOR ANY PERSON, UNLESS UNDER THE DIRECTION OF A LICENSED ARCHITECT TO ALTER THIS DOCUMENT IN ANYWAY. ALTERATIONS MUST HAVE THE SEAL AFFIXED ALONG WITH A DESCRIPTION OF THE ALTERATIONS, DATE AND ARCHITECT'S SIGNATURE. COPYRIGHT © 2012

PHASE
% SUBMISSION

Revisions

Number	Description	Date:
1		
2		
3		
4		
5		

Project Title

HEMPSTEAD LAKE STATE PARK

CONTRACT
NYSP
WORK ORDER: LI-022
CONTRACT: D004472
COA: 1290350/30377/33001/ PRK 4559

PROJECT #: NYSP-1503
DATE: JUNE 2017
DESIGNED BY:
DRAWN BY: GD
CHECKED BY: JD
REVIEWED BY: GRL

SHEET TITLE
ELECTRICAL BASEMENT SIGNAL PLAN

SHEET #
E4.0

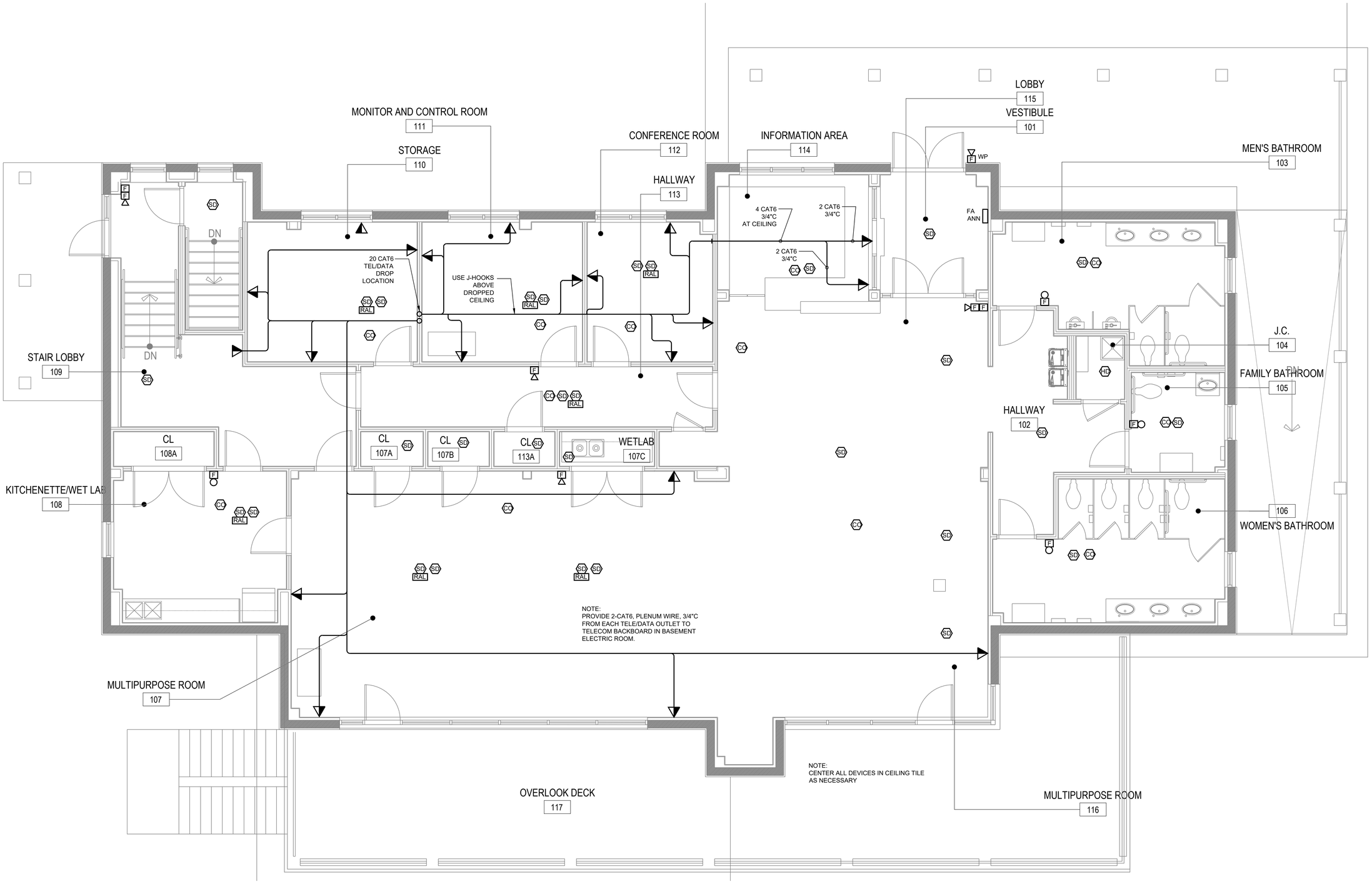

ELECTRICAL FIRST FLOOR SIGNAL PLAN

SCALE: 1/4" = 1'-0"

NY RISING

NEW YORK STATE Parks, Recreation and Historic Preservation

CONSULTANTS:

Stantec

H2M architects + engineers
538 Broad Hollow Road
4th Floor East
Melville, NY 11747
P:(631)756-8900
F:(631)694-4122

KIDNEY DESIGN LA & PC LANDSCAPE ARCHITECTURE PC

LKB CONSULTING ENGINEERS

Cashin Associates, P.C. ENGINEERING - PLANNING - ENVIRONMENTAL - CONSTRUCTION MANAGEMENT

LYNSTAAR ENGINEERING, P.C.

SEAL

"ALTERATION OF THIS DOCUMENT EXCEPT BY A LICENSED PROFESSIONAL IS ILLEGAL"

THESE DOCUMENTS CONTAIN POTENTIALLY SENSITIVE INFORMATION AND SHALL BE USED FOR THEIR INTENDED PURPOSE. ONCE THE INTENDED PURPOSE HAS CEASED, THE DOCUMENTS SHALL BE DESTROYED IN A SECURE MANNER.

IT IS A VIOLATION OF STATE EDUCATION LAW FOR ANY PERSON, UNLESS UNDER THE DIRECTION OF A LICENSED ARCHITECT TO ALTER THIS DOCUMENT IN ANYWAY. ALTERATIONS MUST HAVE THE SEAL AFFIXED ALONG WITH A DESCRIPTION OF THE ALTERATIONS, DATE AND ARCHITECT'S SIGNATURE. COPYRIGHT © 2012

PHASE

% SUBMISSION

Revisions

Number	Description	Date:
1		
2		
3		
4		
5		

Project Title

HEMPSTEAD LAKE STATE PARK

CONTRACT

NYSP
WORK ORDER: LI-022
CONTRACT: D004472
COA: 1290350/30377/33001/ PRK 4559

PROJECT #: NYSP-1503

DATE: JUNE 2017

DESIGNED BY:

DRAWN BY: GD

CHECKED BY: JD

REVIEWED BY: GRL

SHEET TITLE

ELECTRICAL FIRST FLOOR SIGNAL PLAN

SHEET #

E4.1

DUAL ACTION MANUAL PULL STATION

NO SCALE

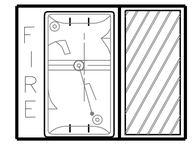

ADA STROBE AND HORN DETAIL

NO SCALE

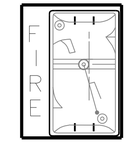

ADA STROBE DETAIL

NO SCALE

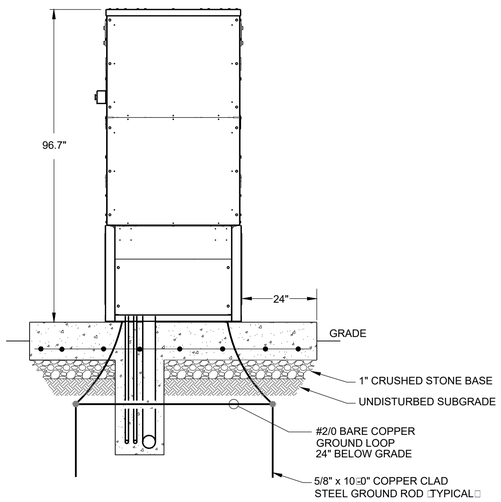

EAST GENERATOR ELEVATION

SCALE: 1/2" □ 1□0"

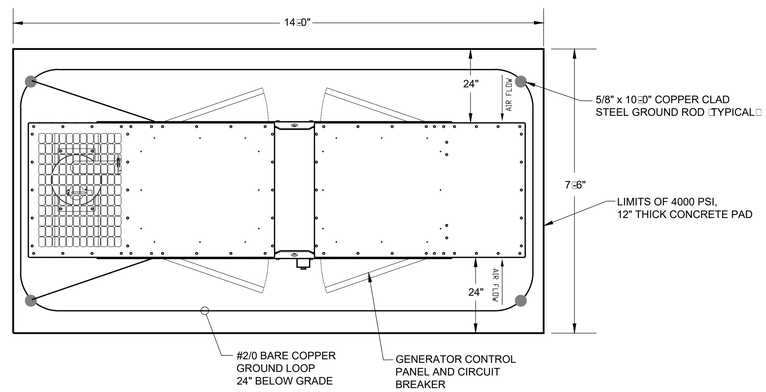

GENERATOR PLAN

SCALE: 1/2" □ 1□0"

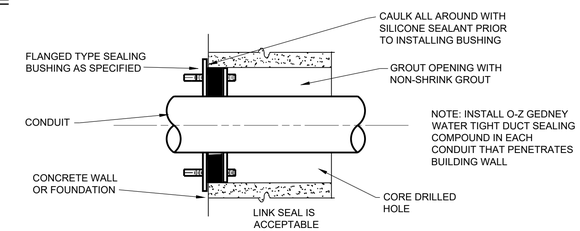

TYPICAL SLEEVE DETAIL FOR WALL/FLOOR PENETRATION

NO SCALE

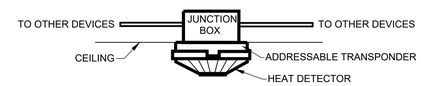

HEAT DETECTOR DETAIL

NO SCALE

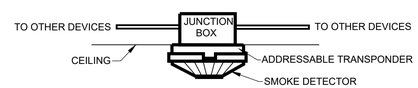

SMOKE DETECTOR DETAIL

NO SCALE

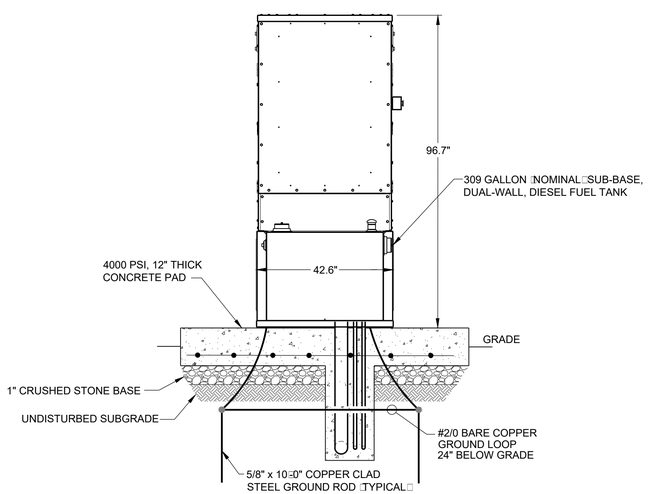

WEST GENERATOR ELEVATION

SCALE: 1/2" □ 1□0"

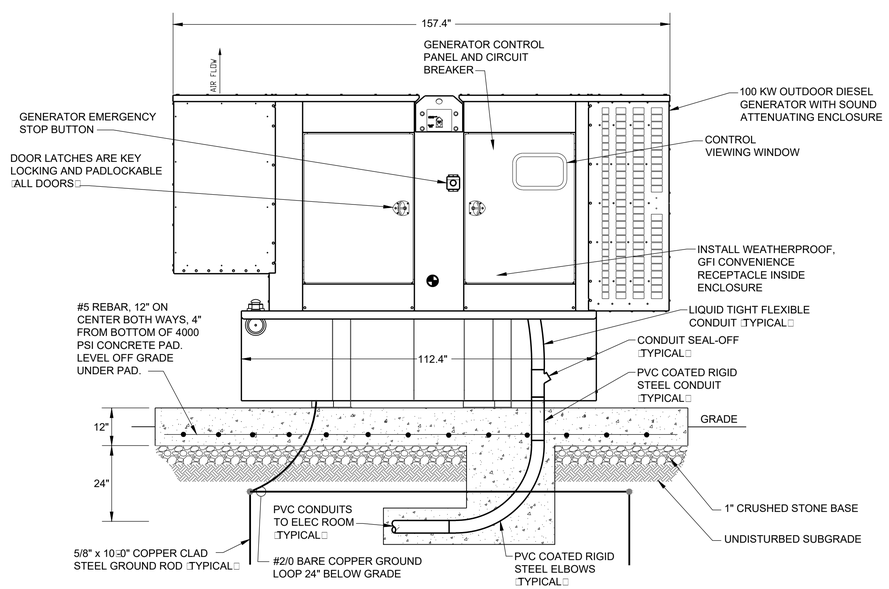

SOUTH GENERATOR ELEVATION

SCALE: 1/2" □ 1□0"

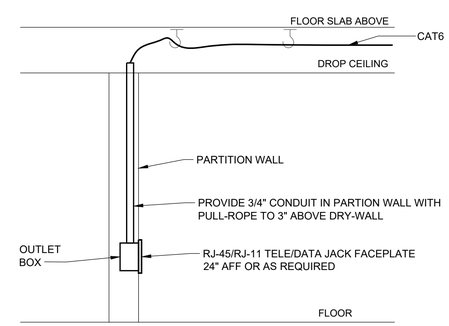

TYPICAL DATA OUTLET DETAIL

NO SCALE

NY RISING

NEW YORK STATE Parks, Recreation and Historic Preservation

CONSULTANTS:

Stantec

H2M architects + engineers
538 Broad Hollow Road
4th Floor East
Melville, NY 11747
P:(631)756-8000
F:(631)694-4122

GEDNEY DESIGN

LKB CONSULTING ENGINEERS

Cashin Associates, P.C.
ENGINEERING - PLANNING - ENVIRONMENTAL - CONSTRUCTION MANAGEMENT

LYNSTAAR ENGINEERING, P.C.

SEAL

"ALTERATION OF THIS DOCUMENT EXCEPT BY A LICENSED PROFESSIONAL IS ILLEGAL"

THESE DOCUMENTS CONTAIN POTENTIALLY SENSITIVE INFORMATION AND SHALL BE USED FOR THEIR INTENDED PURPOSE. ONCE THE INTENDED PURPOSE HAS CEASED, THE DOCUMENTS SHALL BE DESTROYED IN A SECURE MANNER.

IT IS A VIOLATION OF STATE EDUCATION LAW FOR ANY PERSON, UNLESS UNDER THE DIRECTION OF A LICENSED ARCHITECT TO ALTER THIS DOCUMENT IN ANYWAY. ALTERATIONS MUST HAVE THE SEAL AFFIXED ALONG WITH A DESCRIPTION OF THE ALTERATIONS, DATE AND ARCHITECT'S SIGNATURE. COPYRIGHT © 2012

PHASE
% SUBMISSION

Revisions

Number	Description	Date:
1		
2		
3		
4		
5		

Project Title

HEMPSTEAD LAKE STATE PARK

CONTRACT
NYSP
WORK ORDER: LI-022
CONTRACT: D004472
COA: 1290350/30377/33001/ PRK 4559

PROJECT #: NYSP-1503
DATE: JUNE 2017
DESIGNED BY:
DRAWN BY: GD
CHECKED BY: JD
REVIEWED BY: GRL

SHEET TITLE
ELECTRICAL GENERATOR AND FIRE ALARM DETAILS

SHEET #
E5.0