APPENDIX E DETAILED DESIGN DRAWINGS

LONG BEACH WPCP CONSOLIDATION

PUMP STATION CONVERSION

DEPARTMENT OF PUBLIC WORKS
NASSAU COUNTY, NEW YORK

LONG BEACH WPCP CONSOLIDATION PUMP STATION CONVERSION

JULY 2020

CONTRACT NO. S35109-01G

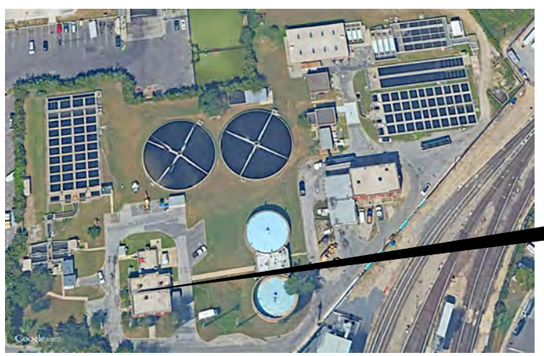

LONG BEACH WASTEWATER POLLUTION CONTROL PLANT – INFLUENT PUMP STATION

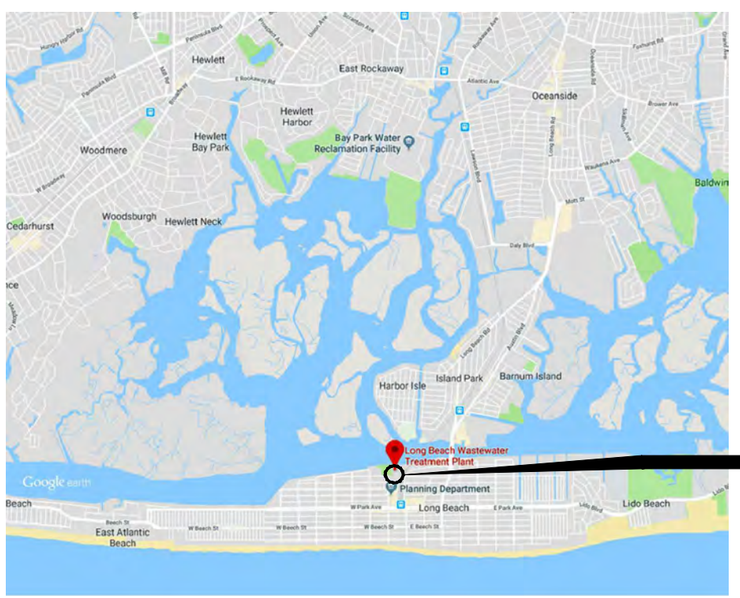

LONG BEACH WASTEWATER POLLUTION CONTROL PLANT

LOCATION MAP

RECOMMENDED FOR APPROVAL

EDWARD F. VISONE
ASSISTANT SUPERINTENDENT OF SANITARY CONSTRUCTION

6/30/2020
DATE

VINCENT FALKOWSKI, P.E.
DEPUTY COMMISSIONER OF ENVIRONMENTAL PROGRAMS

6/30/2020
DATE

APPROVED BY

KENNETH G. ARNOLD, P.E.
COMMISSIONER OF PUBLIC WORKS

06/30/20
DATE

Hazen ARCADIS

LEGAL ENTITY:
ARCADIS CE, INC.

DRAWING INDEX

SHEET NUMBER	SHEET COUNT	SHEET TITLE
		GENERAL
G-01	1	TITLE BLOCK - INCLUDES VICINITY MAP
G-02	2	LIST OF DRAWINGS, ABBREVIATIONS AND SYMBOLS
G-03	3	CODE COMPLIANCE CHARTS
G-04	4	CODE COMPLIANCE CHARTS
G-05	5	CODE COMPLIANCE PLANS
		INSTRUMENTATION AND CONTROL
I-01	6	SYMBOLS, LEGENDS AND ABBREVIATIONS
I-02	7	NETWORK ARCHITECTURE BLOCK DIAGRAM
I-03	8	PUMP STATION P&ID
I-04	9	ELECTRICAL ROOM P&ID
I-05	10	INSTALLATION AND MOUNTING DETAILS
I-06	11	PANEL LAYOUT
		DEMOLITION
D-01	12	EXISTING AND DEMOLITION BOTTOM PLAN (MECHANICAL)
D-02	13	EXISTING AND DEMOLITION INTERMEDIATE PLAN (MECHANICAL)
D-03	14	EXISTING AND DEMOLITION SECTION (MECHANICAL)
D-04	15	EXISTING AND DEMOLITION PLANS (STRUCTURAL)
D-05	16	EXISTING AND DEMOLITION OPERATING FLOOR PLAN AND ROOF PLAN (STRUCTURAL)
D-06	17	EXISTING AND DEMOLITION SECTIONS (STRUCTURAL)
D-07	18	EXISTING AND DEMOLITION DETAILS - SHEET 1
D-08	19	EXISTING AND DEMOLITION DETAILS - SHEET 2
		CIVIL (SITE)
C-01	20	CIVIL NOTES, SYMBOLS AND ABBREVIATIONS
C-02	21	EXISTING SITE PLAN
C-03	22	EXISTING AND STAGING PLAN
C-04	23	EXISTING SITE FEATURES DEMOLITION PLAN
C-05	24	DEMOLITION BURIED UTILITIES PLAN
C-06	25	EROSION AND SEDIMENT CONTROL PLAN
C-07	26	SITE PLAN
C-08	27	BURIED UTILITIES PLAN
C-09	28	FORCE MAIN - BAY PARK SANITARY SEWER CONNECTION
C-10	29	FORCE MAIN - PROFILE
C-11	30	DETAILS SHEET 1
C-12	31	DETAILS SHEET 2
C-13	32	DETAILS SHEET 3
C-14	33	INLINE CDS DETAIL
		LANDSCAPING (NONE)
		STRUCTURAL
S-01	34	GENERAL NOTES AND ABBREVIATIONS
S-02	35	PUMP STATION FOUNDATION PLAN AT EL -9.80
S-03	36	PUMP STATION INTERMEDIATE PLAN AT EL -0.30
S-04	37	PUMP STATION FLOOR PLAN AT EL 9.89
S-05	38	ELECTRICAL BUILDING FOUNDATION PLAN AT EL 3.40
S-06	39	ELECTRICAL BUILDING FLOOR PLAN AT EL 21.40
S-07	40	GENERATOR PLATFORM PLANS
S-08	41	SECTIONS AND DETAILS SHEET 1
S-09	42	SECTIONS AND DETAILS SHEET 2
S-10	43	SECTIONS AND DETAILS SHEET 3
S-11	44	SECTIONS AND DETAILS SHEET 4
S-12	45	BYPASS PUMP STATION FOUNDATION PLAN
S-13	46	BYPASS PUMP STATION TOP PLAN
S-14	47	BYPASS PUMP STATION SECTIONS AND DETAILS SHEET 1
S-15	48	BYPASS PUMP STATION SECTIONS AND DETAILS SHEET 2
S-16	49	MISCELLANEOUS DETAILS - I
S-17	50	MISCELLANEOUS DETAILS - II
S-18	51	MISCELLANEOUS DETAILS - III
S-19	52	TYPICAL DETAILS I
S-20	53	TYPICAL DETAILS II
S-21	54	TYPICAL DETAILS III
S-22	55	TYPICAL DETAILS IV
S-23	56	TYPICAL DETAILS V
S-24	57	TYPICAL DETAILS VI
S-25	58	TYPICAL DETAILS VII

SHEET NUMBER	SHEET COUNT	SHEET TITLE
		ARCHITECTURAL
A-01	59	LEGENDS, ABBREVIATIONS AND GENERAL NOTES
A-02	60	ELECTRICAL BUILDING FLOOR PLAN AND ROOF PLAN
A-03	61	ELECTRICAL BUILDING: EXTERIOR ELEVATIONS
A-04	62	ELECTRICAL BUILDING: BUILDING AND WALL SECTIONS
A-05	63	BUILDING AND ROOF DETAILS
A-06	64	TYPICAL RAILING, MASONRY AND MISC DETAILS
A-07	65	TYPICAL DOOR DETAILS AND SCHEDULES
A-08	66	SIGNAGE
A-09	67	SIGNAGE PLANS
		MECHANICAL (PROCESS)
M-01	68	LEGEND, SYMBOLS, ABBREVIATIONS, AND GENERAL NOTES
M-02	69	PUMP STATION BOTTOM PLAN
M-03	70	PUMP STATION INTERMEDIATE PLAN
M-04	71	PUMP STATION TOP PLAN
M-05	72	PUMP STATION SECTION I
M-06	73	PUMP STATION SECTION II
M-07	74	PUMP STATION SECTION III
M-08	75	BYPASS PUMPING SITE PLAN
M-09	76	BYPASS PUMPING PLAN
M-10	77	BYPASS PUMPING SECTION I
M-11	78	BYPASS PUMPING SECTION II
M-12	79	MISCELLANEOUS DETAILS - SHEET 1
M-13	80	MISCELLANEOUS DETAILS - SHEET 2
M-14	81	MISCELLANEOUS DETAILS - SHEET 3
		HVAC
H-01	82	ABBREVIATIONS, SYMBOLS AND GENERAL NOTES
H-02	83	ELECTRICAL ROOM PLAN
H-03	84	GRADE LEVEL PLAN
H-04	85	PARTIAL FLOOR PLANS
H-05	86	EQUIPMENT SCHEDULES, CONTROL SCHEMATICS AND DETAILS
		PLUMBING
P-01	87	ABBREVIATIONS, SYMBOLS AND GENERAL NOTES
P-02	88	PUMP ROOM ROOF AND INTERMEDIATE FLOOR PLAN
P-03	89	PUMP ROOM FLOOR PLAN
P-04	90	DETAILS
		FIRE PROTECTION (NONE)
		ELECTRICAL
E-01	91	LEGEND, SYMBOLS AND ABBREVIATIONS
E-02	92	SITE PLAN
E-03	93	SWBD-1 SINGLE LINE DIAGRAM
E-04	94	PP-1 SINGLE LINE DIAGRAM
E-05	95	ELECTRICAL BUILDING POWER PLAN
E-06	96	ELECTRICAL BUILDING LIGHTING AND GROUNDING PLAN
E-07	97	SITE GROUNDING PLAN
E-08	98	PUMP STATION BOTTOM PLAN POWER
E-09	99	PUMP STATION BOTTOM PLAN LIGHTING
E-10	100	PUMP STATION INTERMEDIATE PLAN POWER
E-11	101	PUMP STATION INTERMEDIATE PLAN LIGHTING
E-12	102	DEMOLITION PLAN
E-13	103	BLOCK DIAGRAM
E-14	104	PANELBOARD AND FIXTURE SCHEDULES
E-15	105	ELECTRICAL DETAILS I
E-16	106	ELECTRICAL DETAILS II
E-17	107	GENERATOR PLATFORM CONDUIT DETAILS
E-18	108	ELECTRICAL BUILDING FOUNDATION CONDUIT DETAILS
E-19	109	ELECTRICAL BUILDING CONDUIT DETAILS
E-20	110	TEMPORARY DISTRIBUTION SYSTEM DIAGRAM
E-21	111	EXISTING SITE PLAN TEMPORARY ELECTRICAL SYSTEMS
E-22	112	TEMPORARY GRIT COLLECTION SYSTEM CONTROLS

NOTES:

1. ALL REFERENCES IN THE CONTRACT DOCUMENTS TO CONTRACTOR OR WORK BY A SPECIFIC DISCIPLINE SHALL BE INTERPRETED TO MEAN THE CONTRACT NO. S35109-01G GENERAL CONSTRUCTION CONTRACTOR.

DRAWING NUMBER SEQUENCE

1. THE RUNNING TOTAL FOR THE ENTIRE SET OF DRAWINGS IS DISPLAYED IN THE LOWER RIGHT HAND CORNER.

TITLE MARKERS

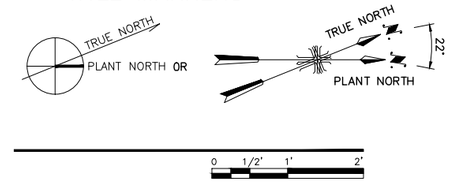

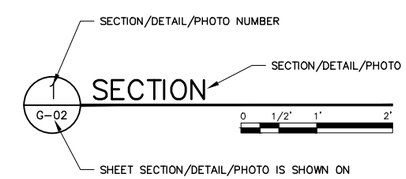

TYPICAL DETAILS

0 1/2' 1' 2'

SECTION MARKERS

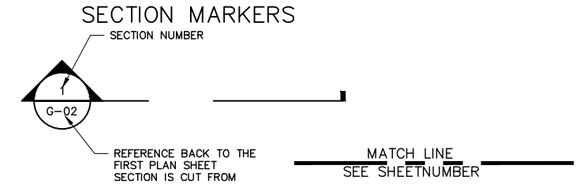

DISCIPLINE DESIGNATOR

G	GENERAL
I	INSTRUMENTATION
C	CIVIL
D	DEMOLITION
S	STRUCTURAL
A	ARCHITECTURAL
M	MECHANICAL (PROCESS)
H	HVAC
P	PLUMBING
E	ELECTRICAL

DETAIL MARKERS

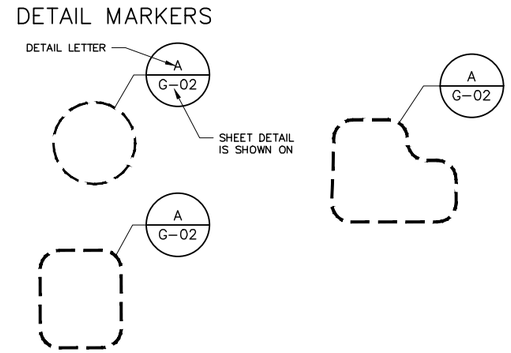

SHEET NUMBER IDENTIFICATION

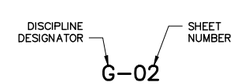

Hazen ARCADIS
A JOINT VENTURE

LEGAL ENTITY:
ARCADIS CE, INC.

SEALS

NASSAU COUNTY, NEW YORK
DEPARTMENT OF PUBLIC WORKS

LONG BEACH WPCP CONSOLIDATION
PUMP STATION CONVERSION

LONG BEACH WASTEWATER POLLUTION CONTROL PLANT

NO.	DATE	ISSUED FOR	BY

COPYRIGHT: 2017 HAZEN AND SAWYER/ ARCADIS A JOINT VENTURE

DATE:	JULY 2020
PROJECT NO.:	00726790.0001
FILE NAME:	G-02
DESIGNED BY:	L. JONES
DRAWN BY:	J. MA
CHECKED BY:	R. PENA-LANG

SHEET TITLE

GENERAL

LIST OF DRAWINGS, ABBREVIATIONS AND SYMBOLS

SCALE:
NOT TO SCALE

G-02

SHEET 02 OF 112

User: JMA Spec: AUS-NCSMOD File: G:\WH_CAD\VOL2\ACAD\PROJ\00726790.0001\SHEETS\G-02.DWG Scale: 1:1 SavedDate: 7/20/2020 Time: 12:00 Plot Date: Mo, Jessica; 7/20/2020; 12:00 ; Layout: LAYOUT1

DISCIPLINE	GENERAL CODE CRITERIA						TABLE NOTES
	PROJECT	GENERAL					
	CODES						
A/S	BUILDING CODE	2020 INTERNATIONAL BUILDING CODE					
H/A	FIRE CODE	2020 INTERNATIONAL FIRE CODE					
H	PLUMBING CODE	2020 INTERNATIONAL PLUMBING CODE					
H	MECHANICAL CODE	2020 INTERNATIONAL MECHANICAL CODE					
E	ELECTRICAL CODE	NFPA 70 (NEC 2017)					
A	ENERGY CODE	2020 INTERNATIONAL ENERGY CONSERVATION CODE					
A/S	EXISTING BUILDING CODE	2020 INTERNATIONAL EXISTING BUILDING CODE					
	SITE						
S	SOIL CLASSIFICATION (SITE CLASS)	D					
S	WIND SPEED	134 MPH					
S	WIND EXPOSURE	C					
S	SPECTRAL RESPONSE COEFFICIENT, SDS	0.258					
A	CLIMATE ZONE	4A - MOIST					
S	NON STRUCTURAL COMPONENT SEISMIC DESIGN REQUIRED	NO					
	BUILDING/STRUCTURE #	ELECTRICAL BUILDING					
A	OCCUPANCY OF BUILDING	F-2					
A	CONSTRUCTION TYPE	II-B					
A	NUMBER OF STORIES	1 - STORY					
A	BUILDING HEIGHT	26 - FEET					
A	FLOOR AREA	806 SF					
S	WIND PRESSURE (COMPONENTS AND CLADDING)	50 PSF					
S	RISK CATEGORY	III					
S	SEISMIC DESIGN CATEGORY	B					
	BUILDING/STRUCTURE #	PUMP STATION					
A	OCCUPANCY OF BUILDING	U					
A	CONSTRUCTION TYPE	II-B					
A	NUMBER OF STORIES	0-STORIES ABOVE GRADE, 2 - STORIES BELOW GRADE					
A	BUILDING HEIGHT	1 - FEET ABOVE GRADE, 22'-4" BELOW GRADE					
A	FLOOR AREA	1,854 SF					
S	WIND PRESSURE (COMPONENTS AND CLADDING)	50 PSF					
S	RISK CATEGORY	III					
S	SEISMIC DESIGN CATEGORY	B					
	ROOM NAME/AREA	ROOM OCCUPANCY - IBC CHAPTER 3	NFPA 820 VENTILATION RATE (AIR CHANGES PER HR)	ELECTRICAL CLASSIFICATION	NEC HAZARDOUS CLASSIFICATION	AUTOMATIC SPRINKLER: STAND PIPE: FIRE ALARM: GAS DETECTION	
	DISCIPLINE	A	H (REQUIRED/ ACTUAL)	E	E	A/P/M	
ROOM 1	ELECTRICAL ROOM	F-2	NA	DRY	UNCLASSIFIED	NO:NO:YES:NO	
ROOM 2	INFLUENT CHAMBER	U	NNV	CORROSIVE	CLASS I DIV I	NO:NO:NO:NO	
ROOM 3	DRY PIT	U	6 ACH	CORROSIVE	UNCLASSIFIED	NO:NO:YES:NO	

NNV – NORMALLY NOT VENTILATED

CODE NOTES

1. INFLUENT CHAMBER AND DRY PIT, OF THE EXISTING INFLUENT BUILDING, WILL BE THE ONLY REMAINING SPACES IN THE NEW CONVERTED PUMP STATION. PUMP STATION WILL BE AN UNDERGROUND, UNMANNED STRUCTURE. AS SUCH THE PUMP STATION WILL BE GOVERNED BY NFPA 820.
2. PUMP STATION OCCUPANCY IS FOR EGRESS PURPOSES ONLY. PUMP STATION IS NOT AN OCCUPIED STRUCTURE..
3. ALTERATIONS TO EXISTING INFLUENT CHAMBER ARE A LEVEL 3 ALTERATION AS PER THE INTERNATIONAL EXISTING BUILDING CODE.
4. FLOOD COMPLIANCE INFORMATION
   - 4.1. FEMA MAP NUMBER: 36059C0308G.
   - 4.2. FLOOD ZONE: NON–COASTAL A.
   - 4.3. BASE FLOOD ELEVATION: 10.5 FT (NAVD 88)
   - 4.4. 100 YR FLOOD DATA (NAVD 88).
     - 4.4.1. STILL WATER: 10.5 FT.
     - 4.4.2. WAVE HEIGHT: 1.0 FT
     - 4.4.3. SEA LEVEL RISE (SLR): 2.5 FT.
     - 4.4.4. 100 YR DESIGN FLOOD ELEVATION: 14.0 FT.
   - 4.5. 500 YR FLOOD DATA (NAV 88).
     - 4.5.1. 500 YR STILL WATER: 14 FT.
     - 4.5.2. WAVE HEIGHT: 2.9 FT.
     - 4.5.3. SEA LEVEL RISE (SLR): 2.5 FT.
     - 4.5.4. 500 YR DESIGN FLOOD ELEVATION: 19.4 FT.
   - 4.6. PROJECT DESIGN FLOOD ELEVATION: 19.4 FT (NAV 88).

BUILDING CODE CHART: [IBC 2020 AS MODIFIED BY THE STATE OF NEW YORK]				
	ELECTRICAL BUILDING		PUMP STATION	
NFPA 820 CLASSIFICATION	NA		SEE GENERAL CODE TABLE	
BUILDING (MAIN) OCCUPANCY (CHAPTER 3)	F-2		U	
MIXED USE FACILITY				
ROOM SEPARATION RATING	NA		NONE	
CONSTRUCTION CLASSIFICATION (CHAPTER 6)	II-B		II-B	
NUMBER OF STORIES	ALLOWABLE	ACTUAL	ALLOWABLE	ACTUAL
	3 STORIES	2 STORIES	2 STORIES	0 STORIES
BUILDING HEIGHT	ALLOWABLE	ACTUAL	ALLOWABLE	ACTUAL
	55-FEET	26-FEET	55-FEET	1-FEET
ALLOWABLE AREA PER FLOOR	ALLOWABLE	ACTUAL	ALLOWABLE	ACTUAL
	23000 SF	806 SF	8,500 SF	1,854 SF
FIRE SEPARATION DISTANCE RATINGS (TABLE 602):				
	REQUIRED	PROVIDED	REQUIRED	PROVIDED
DISTANCE LESS THAN 5'	1	NA	1	1
DISTANCE BETWEEN 5' & 10'	1	NA	1	1
DISTANCE BETWEEN 10' & 30'	0	0	0	0
DISTANCE MORE THAN 30'	0	0	0	0
FIRE RESISTANCE RATING REQ'TS FOR BLDG ELEMENTS (TABLE 601):				
	REQUIRED	PROVIDED	REQUIRED	PROVIDED
PRIMARY STRUCTURAL FRAMING	0	0	0	NA
BEARING WALLS - EXTERIOR	0	0	0	NA
BEARING WALLS - INTERIOR	0	0	0	NA
NON BEARING WALLS - EXTERIOR	SEE FIRE SEPARATION DISTANCE RATINGS			
NON BEARING WALLS - INTERIOR	0	0	0	NA
FLOOR CONSTRUCTION	0	0	0	NA
ROOF CONSTRUCTION	0	0	0	NA
INTERIOR FINISHES (TABLE 803.11) :				
VERTICAL EXITS AND EXIT PASSAGEWAYS	B	B	NR	NR
EXIT ACCESS CORRIDORS & OTHER EXITWAYS	C	C	NR	NR
ROOMS AND ENCLOSED SPACES	C	C	NR	NR
FIRE PROTECTION SYSTEMS (CHAPTER 9):				
	REQUIRED	PROVIDED	REQUIRED	PROVIDED
AUTOMATIC SPRINKLER SYSTEMS (SECTION 903)	NO	NO	NO	NO
ALT. AUTOMATIC FIRE-EXTINGUISHING SYSTEMS (SECTION 904)	NO	NO	NO	NO
STANDPIPE SYSTEMS (SECTION 905)	NO	NO	NO	NO
PORTABLE FIRE EXTINGUISHERS (SECTION 906)	YES	YES	NO	YES
FIRE ALARM AND DETECTION SYSTEMS(SECTION 907)	NO	YES	NO	YES
EMERGENCY ALARM SYSTEMS (SECTION 908)	NO	NO	NO	NO
EMERGENCY RESPONDER SAFETY FEATURES (SECTION 914)	NO	NO	NO	NO
MEANS OF EGRESS (CHAPTER 10):				
	REQUIRED/ ALLOWABLE	PROVIDED	REQUIRED/ ALLOWABLE	PROVIDED
OCCUPANT LOAD CHART (TABLE 1004.1.2) (REFERENCE CODE COMPLIANCE PLAN)	3		4	
EGRESS WIDTH PER OCCUPANT LOAD - STAIRWAYS (SECTION 1005.3)	MIN 36"	36"	MIN 36"	NA
EGRESS WIDTH PER OCCUPANT LOAD - OTHER COMPONENTS (SECTION 1005.3)	MIN 36"	36"	MIN 36"	NA
STORIES WITH ONE MEANS OF EGRESS (TABLE 1006.3.2)	NO		YES	
SPACES WITH ONE MEANS OF EGRESS (TABLE 1006.2.1)	NO		YES	
EXIT ACCESS TRAVEL DISTANCE (REFERENCE CODE COMPLIANCE PLAN)	75-FEET		100-FEET	
CORRIDOR FIRE-RESISTANCE RATING	0	0	0	0
ACCESSIBILITY (ANSI/ ADAAG/IBC CHAPTER 11):				
	REQUIRED	PROVIDED	REQUIRED	PROVIDED
CONSTRUCTION SITES	NO	NO	NO	EXEMPT 1103.2.4
ACCESSIBLE ROUTE	NO	EXEMPT 1103.2.9 & 1104	NO	EXEMPT 1103.2.4
ACCESSIBLE ENTRANCE	NO	EXEMPT 1103.2.9	NO	EXEMPT 1103.2.4
EQUIPMENT SPACES	NO	EXEMPT 1103.2.9	NO	EXEMPT 1103.2.4 & 1103.2.9
PARKING	NO	NO	NO	EXEMPT 1103.2.4
SIGNAGE	NO	YES	NO	EXEMPT 1103.2.4

NR - NOT REQUIRED; NA - NOT APPLICABLE; HR = HOUR(S); FT - FEET; BLDG - BUILDING; ALT - ALTERNATE; GSF - GROSS SQUARE FEET; SPKR - SPRINKLER; W - WITH; W/O - WITHOUT; MAX - MAXIMUM; MIN - MINIMUM

Hazen ARCADIS
A JOINT VENTURE

LEGAL ENTITY:
ARCADIS CE, INC.

SEALS

NASSAU COUNTY, NEW YORK
DEPARTMENT OF PUBLIC WORKS

LONG BEACH WPCP CONSOLIDATION
PUMP STATION CONVERSION

LONG BEACH WASTEWATER POLLUTION CONTROL PLANT

NO.	DATE	ISSUED FOR	BY

COPYRIGHT: 2017 HAZEN AND SAWYER/ ARCADIS A JOINT VENTURE

DATE: JULY 2020
PROJECT NO.: 00726790.0001
FILE NAME: G–03
DESIGNED BY: R. BELLO
DRAWN BY: R. BOBY
CHECKED BY: E. DAWKINS

SHEET TITLE
GENERAL
CODE COMPLIANCE CHARTS

SCALE:
NOT TO SCALE

G–03
SHEET 03 OF 112

User:JMA Spec:AUS-NCSMOD File:\\NY03FP01\DATA\WHI_CAD\VOL2\ACAD\PROJ\00726790.0001\SHEETS\G-03.DWG Scale:1:1 SavedDate:7/17/2020 Time:09:47 Plot Date: Mo, Jessica; 7/17/2020; 16:37 ; Layout:G-03

STRUCTURAL CRITERIA: SITE			
SNOW LOADS:			
GROUND SNOW LOAD, Pg	25 PSF		
FLAT-ROOF SNOW LOAD, Pf	22 PSF		
SNOW LOAD IMPORTANCE FACTOR, Is	1.10		
THERMAL FACTOR, Ct	1.10		
SNOW EXPOSURE FACTOR, Ce	0.90		
WIND DESIGN DATA:			
WIND SPEED	134 MPH		
WIND EXPOSURE	C		
WIND IMPORTANCE FACTOR, IW	1.00		
APPLICABLE INTERNAL PRESSURE COEFFICIENT	± 0.18		
SEISMIC DESIGN DATA:			
SOIL CLASSIFICATION (SITE CLASS)	D		
SEISMIC IMPORTANCE FACTOR, IE	1.25		
MAPPED SPECTRAL RESPONSE ACCELERATION, SS	24.20%		
MAPPED SPECTRAL RESPONSE ACCELERATION, SI	6.60%		
SPECTRAL RESPONSE COEFFICIENT, SDS	25.80%		
SPECTRAL RESPONSE COEFFICIENT, SDI	10.60%		
DESIGN BASE SHEAR	0.753 W		
SEISMIC RESPONSE COEFFICIENT, CS	7.53%		
RESPONSE MODIFICAITON FACTOR, R	3		
ANALYSIS PROCEDURE USED	"EQUIVALENT LATERAL FORCE PROCEDURE" ASCE 7-10, SECTION 12.8		
BUILDING/STRUCTURE #	ELECTRICAL BUILDING	PUMP STATION	GENERATOR PLATFORM
WIND DESIGN DATA:			
WIND PRESSURE (COMPONENTS AND CLADDING)	50 PSF	50 PSF	50 PSF
SEISMIC DESIGN DATA:			
BASIC SEISMIC FORCE RESISTING SYSTEMS	ORDINARY REINFORCED CONCRETE SHEAR WALLS		
SEISMIC DESIGN CATEGORY	B	B	B
ROOM/AREA	ALL AREAS	AREAS AS NOTED	ALL AREAS
LIVE LOADS:	250 PSF	ROOF - 250 PSF INTERIOR 100 PSF	250 PSF

REQUIRED VERIFICATION AND INSPECTION (2020 IBC 1705)

ITEM DESCRIPTION	IBC REQUIREMENT	CONSTR. DOCUMENTS	INDEPENDENT INSPECTOR	COMMENTS
STEEL CONSTRUCTION	TABLE 1705.2.3	NOT REQUIRED	NO	
CONCRETE CONSTRUCTION	TABLE 1705.3	REQUIRED	YES	
MASONRY CONSTRUCTION	SECTION 1705.4	NOT REQUIRED	NO	
WOOD CONSTRUCTION	SECTION 1705.5	NOT REQUIRED	NO	
SOILS	TABLE 1705.6	REQUIRED	YES	
DRIVEN DEEP FOUNDATIONS	TABLE 1705.7	REQUIRED	YES	
CAST-IN-PLACE DEEP FOUNDATIONS	TABLE 1705.8	NOT REQUIRED	NO	
HELICAL PILE FOUNDATIONS	SECTION 1705.9	NOT REQUIRED	NO	
WIND RESISTANCE	SECTION 1705.11.3	NOT REQUIRED	NO	
SEISMIC RESISTANCE	SECTION 1705.12	NOT REQUIRED	NO	
SPRAY FIRE-RESISTIVE MATERIALS	SECTION 1705.14	REQUIRED	YES	
MASTIC AND INTUMESCENT FIRE-RESISTANT COATINGS	SECTION 1705.15	NOT REQUIRED	NO	
EXTERIOR INSULATION AND FINISH SYSTEMS (EIFS)	SECTION 1705.16	NOT REQUIRED	NO	
FIRE -RESISTANT PENETRATIONS AND JOINTS	SECTION 1705.17	NOT REQUIRED	NO	
SMOKE CONTROL	SECTION 1705.18	NOT REQUIRED	NO	
OTHER:				

NOTES

ENERGY EFFICIENCY: [IECC 2020 AS MODIFIED BY THE STATE OF NEW YORK]		
CLIMATE ZONE (CHAPTER 3)	4	MOIST-(A)
	BUILDING ENVELOPE REQUIREMENTS (TABLE C402.1.3 or ALT C402.1.4)	BUILDING ENVELOPE DESIGN
ROOF ASSEMBLIES:		
INSULATION ENTIRELY ABOVE DECK	R-30ci	R-35ci
METAL BUILDING	R-19 + R-11 LS	NA
ATTIC AND OTHER	R-38	NA
WALLS BELOW GRADE:		
BELOW-GRADE WALL	R-7.5ci	NA
WALLS ABOVE GRADE:		
MASS	R-11.4ci	NA
METAL BUILDING	R-13 + R-13ci	NA
METAL-FRAMED	R-13 + R-7.5ci	R-24ci
WOOD-FRAMED AND OTHER	R-13 + R-3.8ci OR R-20	NA
FLOORS OVER OUTDOOR AIR OR UNCONDITIONED SPACE:		
MASS	R-10ci	R-10ci
JOIST FRAMING	R-30	NA
OPAQUE DOORS (< 50% GLASS):		
SWINGING	U-0.37	U-0.37
ROLL-UP OR SLIDING	R-4.75	NA
SLAB ON GRADE FLOORS:		
UNHEATED	R-10 FOR 24" BELOW	NA
HEATED	R-15 FOR 36" BELOW	NA
FENESTRATION	BUILDING ENVELOPE REQUIREMENTS (TABLE C402.4)	BUILDING ENVELOPE DESIGN
BUILDING WINDOW AND GLAZED PERCENTAGE	30%	0%
METAL FRAMING WITH OR WITHOUT THERMAL BREAK:		
CURTAIN WALL/ STOREFRONT U-FACTOR	0.38	NA
ENTRANCE U-FACTOR	0.77	0.77
ALL OTHER U-FACTOR	0.45	NA
SHGC - ALL FRAME TYPES:		
SHGC: PF < 0.25	0.4	NA
SHGC: 0.25 PF < 0.5	0.48	NA
SHGC: PF 0.5	0.64	NA
SKYLIGHTS (3% MAXIMUM):		
U-FACTOR	0.5	NA
SHGC	0.4	NA
AIR LEAKAGE (C402.5)		
WALL ASSEMBLIES (C402.5.1.2.2)	MAX 0.04 CFM/SF at 0.3 INCHES W.G.	REQ'D
BUILDING TEST REQUIRED (C402.4.1.2.3)	MAX 0.40 CFM/SF at 0.3 INCHES W.G.	REQ'D
LOUVER DAMPERS (C402.5.5)	MAX 4.00 CFM/SF at 1.0 INCHES W.G.	NA
MAX AIR INFILTRATION RATES	TABLE C402.5.2	
WINDOW, SLIDING DOOR ASSEMBLIES	MAX 0.20 CFM/SF or 0.30 CFM/SF at 6.24 PSF	NA
SKYLIGHTS - WITH CONDESATION WEEPAGE OPENINGS	MAX 0.30 CFM/SF	NA
SKYLIGHTS - ALL OTHER	MAX 0.20 CFM/SF or 0.30 CFM/SF at 6.24 PSF	NA
CURTAIN WALLS	MAX 0.20 CFM/SF or 0.30 CFM/SF at 6.24 PSF	NA
STOREFRONT GLAZING	MAX 0.06 CFM/SF	NA
COMMERCIAL GLAZED SWINGING ENTRANCE DOORS	MAX 1.00 CFM/SF	NA
REVOLVING DOORS	MAX 1.00 CFM/SF	NA
GARAGE DOOR	MAX 0.40 CFM/SF	NA
ROLLING DOOR	MAX 1.00 CFM/SF	NA
AIR LEAKAGE		
WINDOW, SLIDING DOOR ASSEMBLIES	MAX. 0.20 CFM/SF	NA
SWINGING DOOR ASSEMBLIES	MAX. 0.20 CFM/SF	MAX. 0.20 CFM/SF
NR - NOT REQUIRED; NA - NOT APPLICABLE		

Hazen ARCADIS
A JOINT VENTURE

LEGAL ENTITY:
ARCADIS CE, INC.

SEALS

REGISTERED ARCHITECT
ERROL ANTONIO DAWKINS
023835
STATE OF NEW YORK
7/21/2020

NASSAU COUNTY, NEW YORK
DEPARTMENT OF PUBLIC WORKS

LONG BEACH WPCP CONSOLIDATION
PUMP STATION CONVERSION

LONG BEACH WASTEWATER POLLUTION CONTROL PLANT

NO.	DATE	ISSUED FOR	BY

COPYRIGHT: 2017 HAZEN AND SAWYER/ ARCADIS A JOINT VENTURE

DATE: JULY 2020
PROJECT NO.: 00726790.0001
FILE NAME: G-04
DESIGNED BY: R. BELLO
DRAWN BY: R. BOBY
CHECKED BY: E. DAWKINS

SHEET TITLE

GENERAL

CODE COMPLIANCE CHARTS

SCALE: NOT TO SCALE

G-04

SHEET 04 OF 112

User:JMA Spec:AUS-NCSMOD File:\\NY03FP01\DATA\WHI_CAD\V02.2\ACAD\PROJ\00726790.0001\SHEETS\G-04.DWG Scale:1:1 SavedDate:7/17/2020 Time:09:47 Plot Date: Mo, Jessica; 7/17/2020; 16:38 ; Layout:G-04

LEGEND

## →	INDICATES DIRECTION OF EGRESS PATH ## IS DISTANCE IN FEET TO EXIT FROM SQUARE DOT TO ARROW
SF	SQUARE FEET
OLF	OCCUPANT LOAD FACTOR
OL	OCCUPANT LOAD
SPR	SPRINKLER
NA	NOT APPLICABLE
E	EXIT SIGN LOCATION
OC	OCCUPANT CLASSIFICATION
▲	FIRE EXTINGUISHER, DRY CHEMICAL
▲	FIRE EXTINGUISHER, CO2

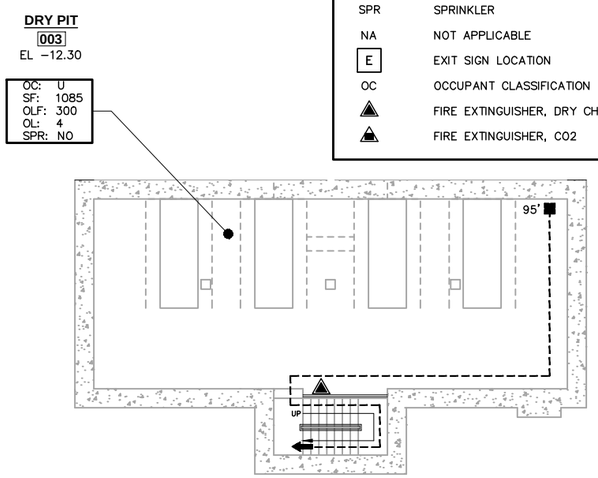

PUMP STATION BOTTOM FLOOR PLAN @ EL. −12.30

SCALE: 1/8" = 1'−0"

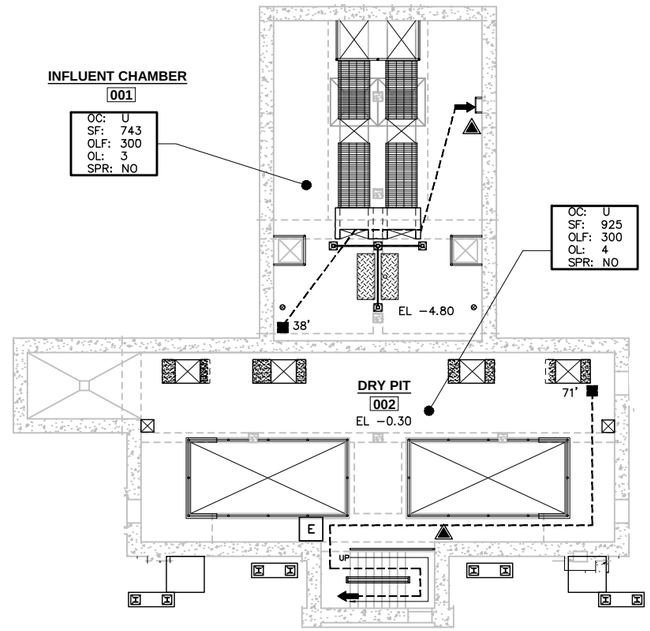

PUMP STATION INTERMEDIATE FLOOR PLAN @ EL. −0.30

SCALE: 1/8" = 1'−0"

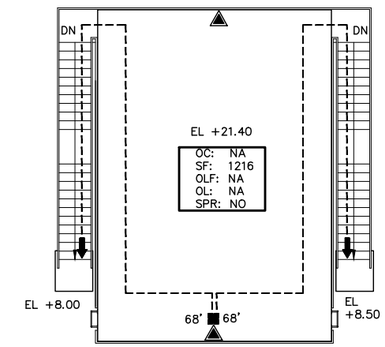

GENERATOR PLATFORM PLAN @ EL. 21.40

SCALE: 1/8" = 1'−0"

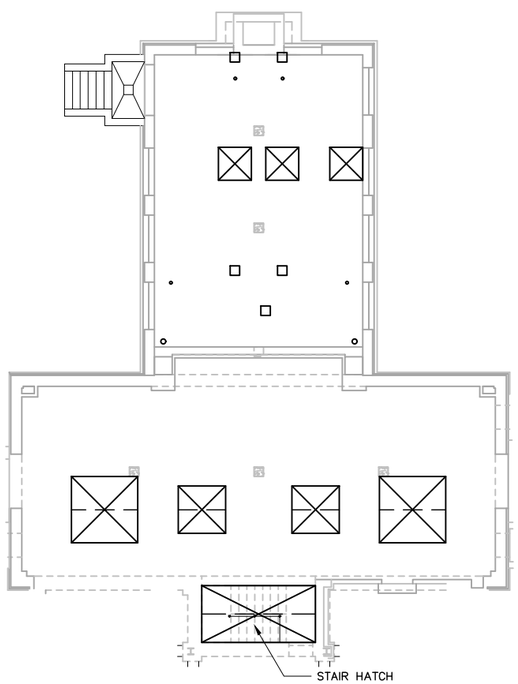

PUMP STATION GRADE LEVEL @ EL. 9.89

SCALE: 1/8" = 1'−0"

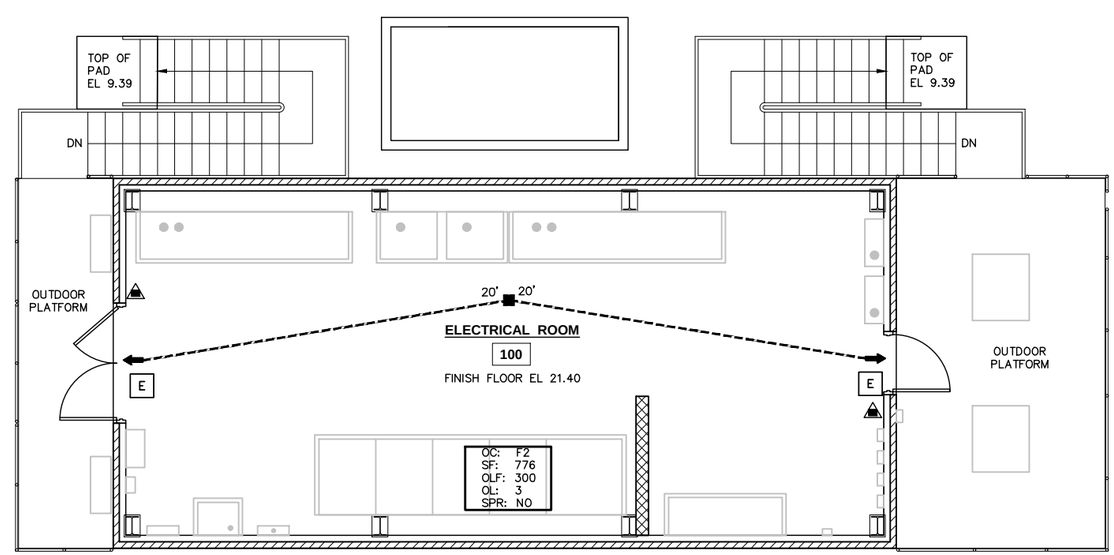

ELECTRICAL BUILDING FLOOR PLAN @ EL. 21.40

SCALE: 1/4" = 1'−0"

Hazen ARCADIS A JOINT VENTURE

LEGAL ENTITY:
ARCADIS CE, INC.

SEALS

REGISTERED ARCHITECT ERROL ANTONIO DAWKINS 023835 STATE OF NEW YORK 7/21/2020

NASSAU COUNTY, NEW YORK
DEPARTMENT OF PUBLIC WORKS

LONG BEACH WPCP CONSOLIDATION
PUMP STATION CONVERSION

LONG BEACH WASTEWATER POLLUTION CONTROL PLANT

NO.	DATE	ISSUED FOR	BY

COPYRIGHT: 2017 HAZEN AND SAWYER/ ARCADIS A JOINT VENTURE

DATE: JULY 2020
PROJECT NO.: 00726790.0001
FILE NAME: G−05
DESIGNED BY: R. BELLO
DRAWN BY: R. BOBY
CHECKED BY: E. DAWKINS

SHEET TITLE

GENERAL

CODE COMPLIANCE PLANS

SCALE: AS SHOWN

G−05

SHEET 05 OF 112

User:DMARTINS Spec:AUS-NCSMOD File:\\ARCADIS-US.COM\OFFICEDATA\WHITEPLAINS-NY\WHI_CAD\VOL2\ACAD\PROJ\00726790.0001\SHEETS\G-05.DWG Scale:1:1 SavedDate:7/20/2020 Time:09:19 Plot Date: Martins, Denise; 7/20/2020; 09:52 ; Layout:G-05

INSTRUMENT IDENTIFICATION LEGEND

	FIRST LETTER		SUCCEEDING LETTERS		
	MEASURED OR INITIATING VARIABLE,	MODIFIER	READOUT OR PASSIVE FUNCTION	OUTPUT FUNCTION	MODIFIER
A	ANALYSIS		ALARM		
B	BURNER FLAME		NOT USED	NOT USED	NOT USED
C	CONDUCTIVITY (ELECTRICAL)			CONTROL	CLOSED
D	DENSITY (MASS) OR SPECIFIC GRAVITY	DIFFERENTIAL			
E	VOLTAGE (EMF)		PRIMARY ELEMENT		
F	FLOW RATE	RATIO (FRACTION)			
G	INTRUSION		GLASS GAGE (UNCALIBRATED)		
H	HAND (MANUALLY INITIATED)				HIGH
I	CURRENT (ELECTRICAL)		INDICATE		
J	POWER	SCAN			
K	TIME OR TIME SCHEDULE			CONTROL STATION	
L	LEVEL		LIGHT (PILOT)		LOW
M	MOISTURE OR HUMIDITY				MIDDLE OR INTER-MEDIATE
N	SEQUENCE STRATEGY		NOT USED	NOT USED	NOT USED
O	NOT USED		ORIFICE (RESTRICTION)		OPEN
P	PRESSURE OR VACUUM		POINT (TEST CONNECTION)	PULSE	
Q	QUANTITY	INTEGRATE OR TOTALIZE			
R	RADIOACTIVITY		RECORD OR PRINT		
S	SPEED, FREQUENCY	SAFETY		SWITCH	
T	TEMPERATURE			TRANSMIT	
U	MULTIVARIABLE		MULTIFUNCTION	MULTIFUNCTION	MULTIFUNCTION
V	VIBRATION			VALVE, DAMPER OR LOUVER	
W	WEIGHT OR FORCE		WELL		
X	UNCLASSIFIED	X AXIS	UNCLASSIFIED	UNCLASSIFIED	UNCLASSIFIED
Y	EVENT STATUS	Y AXIS		RELAY OR COMPUTE	
Z	POSITION			DRIVE, ACTUATE OR UNCLASSIFIED FINAL CONTROL ELEMENT	

BASE INSTRUMENTATION SYMBOLS

FIT # — INSTRUMENT FIELD MOUNTED SEE THIS SHEET FOR DETAILS OF INSTRUMENT TAGGING SYSTEM. FULL TAG NUMBER SHOULD BE INCLUDED ON INSTRUMENT INDEX. POWER SUPPLY REQUIRED LOCALLY WHERE SHOWN.

FIR # — INSTRUMENT PANEL FACE MOUNTED

FY # X Y — INSTRUMENT RELAY MOUNTED IN REAR OF PANEL (BROKEN LINE). ACTIVATES AND DEACTIVATES CONTROL AND/OR ALARM SWITCHES AT PRESET VALUE. EQUIPMENT NUMBER (Y) ONLY WHEN NECESSARY. SEE BELOW FOR FUNCTIONS (X).

- △ DIFFERENCE
- > HIGH SELECTOR
- < LOW SELECTOR
- P/I PNEUMATIC/CURRENT CONVERTER
- I/I CURRENT/CURRENT CONVERTER (REPEATER)
- Σ SUMMATION
- AV AVERAGE
- % RATIO

FR # AR # DO — FR & AR ARE TWO FUNCTIONS AS PART OF ONE UNIIT. (CIRCLES TOUCH)

SYMBOLS FOR ANALYTICAL DEVICES:
- CH_4–METHANE
- Cl_2–CHLORINE
- DO–DISSOLVED OXYGEN
- H_2S–HYDROGEN SULFIDE
- H_3PO_4 –PHOSPHORIC ACID
- H_2SO_4 –SULFURIC ACID
- MeOH–METHANOL
- NaHOCL–SODIUM HYPOCHLORITE
- $Na_2S_2O_5$ –SODIUM METHA–BISULFITE
- O_2–OXYGEN
- ORP –OXYDATION REDUCTION POTENTIAL
- pH–HYDROGEN ION CONCENTRATION

△▽ DISCRETE INPUT/OUTPUT

▲▼ ANALOG INPUT/OUTPUT

DIGITAL COMMUNICATION INPUT/OUTPUT– ETHERNET (E), MODBUS (M), HART (H) OR DEVICENET (D)

- 120V — 120V AC POWER SUPPLY
- 480V — 480V AC POWER SUPPLY
- 24V — 24V DC POWER SUPPLY
- I.S.R — INTRINSICALLY SAFE RELAY
- PROGRAMMABLE LOGIC CONTROLLER (PLC) CONTROL BLOCK
- POINT FOR SHARED VIDEO DISPLAY (FUNCTIONS IN PLC)
- AS ABOVE WITH LIMITED ACCESS
- INTERLOCK # – INTERLOCK CONTROL STRATEGY
- FE # — MAGMETER
- PI XXXX, PSH XXXX — PRESSURE SENSOR ASSEMBLY WITH GAUGE AND SWITCH
- LE # — ULTRASONIC OR RADAR ELEMENT
- LSH # — LEVEL SWITCH (FLOAT / REED)

INSTRUMENT TAGGING SYSTEM

PS–LIT–950X–01

- FACILITY CODE
- INSTRUMENT IDENTIFICATION
- LOOP NUMBER
- UNIQUE IDENTIFIER

EQUIPMENT IDENTIFICATION

P–950X–01

- EQUIPMENT DESIGNATION
- LOOP NUMBER
- UNIQUE IDENTIFIER

LOOP#	PUMP STATION PROCESS AREA
9501	COMMINATORS AND GRINDERS
9502	WETWELL/PT LEVEL DEVICES
9503	PUMPS
9504	DISCHARGE FLOW
9505	DISCHARGE PRESSURE
9506	EMERGENCY GENERATOR
9507	FIRE ALARM EQUIPMENT
9508	GAS DETECTION EQUIPMENT
9509	MISC. EQUIPMENT

EQUIPMENT DESIGNATIONS

G	GENERATOR
M	MOTOR
MXR	MIXER
P	PUMP
SSP	SUBMERSIBLE SUMP PUMP
VFD	VARIABLE FREQUENCY DRIVE
SG	SLIDE GATE
GR	GRINDER

EQUIPMENT SYMBOLS

- SUBMERSIBLE PUMP
- GRINDER/MACERATOR
- M — MOTOR
- VFD — VARIABLE FREQUENCY DRIVE
- SLIDE GATE
- SLUICE GATE

VALVE SYMBOLS

- GATE VALVE
- PLUG VALVE
- GLOBE VALVE
- THREE WAY BALL VALVE
- DIAPHRAGM VALVE
- BALL VALVE
- PINCH VALVE
- CHECK VALVE
- DUCKBILL CHECK VALVE
- 3–WAY VALVE
- 4–WAY VALVE

PIPING SYMBOLS

- DIAPHRAGM SEAL WITH ISOLATION VALVE
- INLINE SEAL
- QUICK–CONNECT
- UNION
- ELBOW
- DRAIN
- REDUCER
- ECCENTRIC REDUCER

PANEL DEVICE SYMBOLS

HS L/O/R — HAND SWITCH (MANUAL SELECTOR)
FUNCTION SUBSCRIPT (LOCATION MAY VARY)

PB ESTOP — PUSHBUTTON
FUNCTION SUBSCRIPT (LOCATION MAY VARY)

FUNCTION SUBSCRIPTS FOR HAND SWITCH AND PUSHBUTTON CONTROLS:

ESTOP	E–STOP
F/O/R	FORWARD–OFF–REVERSE
F/O/JR	FORWARD–OFF–JOG REVERSE
H/O/A	HAND–OFF–AUTO
H/O/R	HAND–OFF–REMOTE
H/O/SBY	HAND–OFF–STANDBY
L/O/R	LOCAL–OFF–REMOTE
M/A	MANUAL–AUTO
M/O/A	MANUAL–OFF–AUTO
O/C	OPEN–CLOSE
O/O	ON–OFF
O/S/C	OPEN–STOP–CLOSE
RS	RESET
R/L	REMOTE–LOCAL
R/O	RUN–OFF
SC	SPEED CONTROL POTENTIOMETER
SCR	SILICON CRYSTAL RECTIFIER
S/S	START–STOP
S/SLO	START–STOP WITH LOCKOUT

IL G — INDICATING LIGHT UNIT
- G–GREEN (OFF,STOP,CLOSED)
- R–RED (RUN,START,OPEN)
- W–WHITE (POWER ON)
- A–AMBER (ALARM CONDITION)
- F–FLASHES ON ELECTRIC OR MECHANICAL MALFUNCTION

1 — INTERLOCK 1 = NOTE NUMBER

ELECTRONIC HORN

W — STROBE LIGHT
- A – AMBER
- W – WHITE
- R – RED
- B – BLUE

INTERCONNECTING LINES WITH DOT INDICATE ROUTING OF THE SAME SIGNAL.

INTERCONNECTING LINES WITHOUT DOT INDICATE ROUTING OF MORE THAN ONE SIGNAL

ACTUATOR SYMBOLS & ABBR.

M — ELECTRIC MOTOR ACTUATOR (E)

ABBREVIATIONS

DISCH	DISCHARGE
PRESS	PRESSURE
STP	SEWAGE TREATMENT PLANT

GENERAL NOTES

1. COORDINATE WORK WITH OTHER DRAWINGS AND DISCIPLINES.
2. THE SYMBOLS SHOWN ON THIS SHEET ARE STANDARD DESIGNATIONS. NOT ALL SYMBOLS ARE APPLICABLE TO THE INCLUDED DIAGRAMS AND INSTRUMENT TAGGING SYSTEM.
3. NOT ALL PIPING, FITTINGS, AND TANK DETAILS ARE SHOWN. REFER TO PROCESS DRAWINGS FOR ACTUAL DETAILS.
4. INSTRUMENT IDENTIFICATION AND LOOP NUMBERS APPEAR WITH INSTRUMENT SYMBOL.
5. TAG NUMBER DOES NOT CHANGE IF SIGNAL IS BROUGHT TO ANOTHER CONTRACT AREA.
6. FINAL ALPHA CHARACTER IN TAG (E.G. FI–101A) INDICATES DUPLICATE DEVICE EXISTS. FI–101B MAY BE IN A A PANEL.

LINE TYPES

- SOFTWARE LINK, SYSTEM FUNCTION CONNECTION OR COMMUNICATION LINK
- MODBUS COMMUNICATION
- ETHERNET COMMUNICATION
- DEVICENET COMMUNICATION
- MAIN PROCESS LINE
- AUXILIARY SYSTEMS
- EQUIPMENT PACKAGE LIMIT
- ELECTRIC (ELECTRONIC) SIGNAL
- PNEUMATIC SIGNAL
- CAPILLARY LINE
- HYDRAULIC SIGNAL
- SONIC SIGNAL
- HEAT TRACED AND INSULATED
- T — TELEPHONE LINK
- FUTURE
- EXISTING

DRAWING CONTINUATION LEGEND

PROCESS LINES (ON/OFF PAGE): I–1

UTILITY LINES (ON/OFF PAGE): REMARKS 1 — CONN — UTILITY DRAWING NUMBER — REMARKS 2

INSTRUMENT SIGNAL LINES (ON/OFF PAGE): SIGNAL NAME — CONN — DRAWING NUMBER

PROCESS LINE NOT WITHIN THE BOUNDARY OF THIS SET OF DRAWINGS

INSTRUMENT SIGNAL LINE NOT WITHIN THE BOUNDARY OF THIS SET OF DRAWINGS — SIGNAL NAME

CONN: CONNECTION NUMBER

Hazen ARCADIS A JOINT VENTURE

LEGAL ENTITY: ARCADIS CE, INC.

SEALS

STATE OF NEW YORK — FELIX JIMENEZ — 058881 — 10/21/2020

NASSAU COUNTY, NEW YORK
DEPARTMENT OF PUBLIC WORKS

LONG BEACH WPCP CONSOLIDATION PUMP STATION CONVERSION

LONG BEACH WASTEWATER POLLUTION CONTROL PLANT

NO.	DATE	ISSUED FOR	BY

COPYRIGHT: 2017 HAZEN AND SAWYER/ ARCADIS A JOINT VENTURE

DATE:	JULY 2020
PROJECT NO.:	00726790.0001
FILE NAME:	I–01
DESIGNED BY:	R.JIMENEZ
DRAWN BY:	S.CHALASANI
CHECKED BY:	F.ARANGO

SHEET TITLE

INSTRUMENTATION

SYMBOLS, LEGENDS AND ABBREVIATIONS

SCALE: NOT TO SCALE

I–01

SHEET 06 OF 112

User:SCHALASANI Spec: AUS–NCSMOD File: \\NY03FP01\DATA\WHI_CAD\VOL2\ACAD\PROJ\00726790.0001\SHEETS\I–01.DWG Scale:1:1 SavedDate:7/8/2020 Time:12:22 Plot Date: Chalasani, Subhash; 7/20/2020; 13:35 ; Layout:BLANK

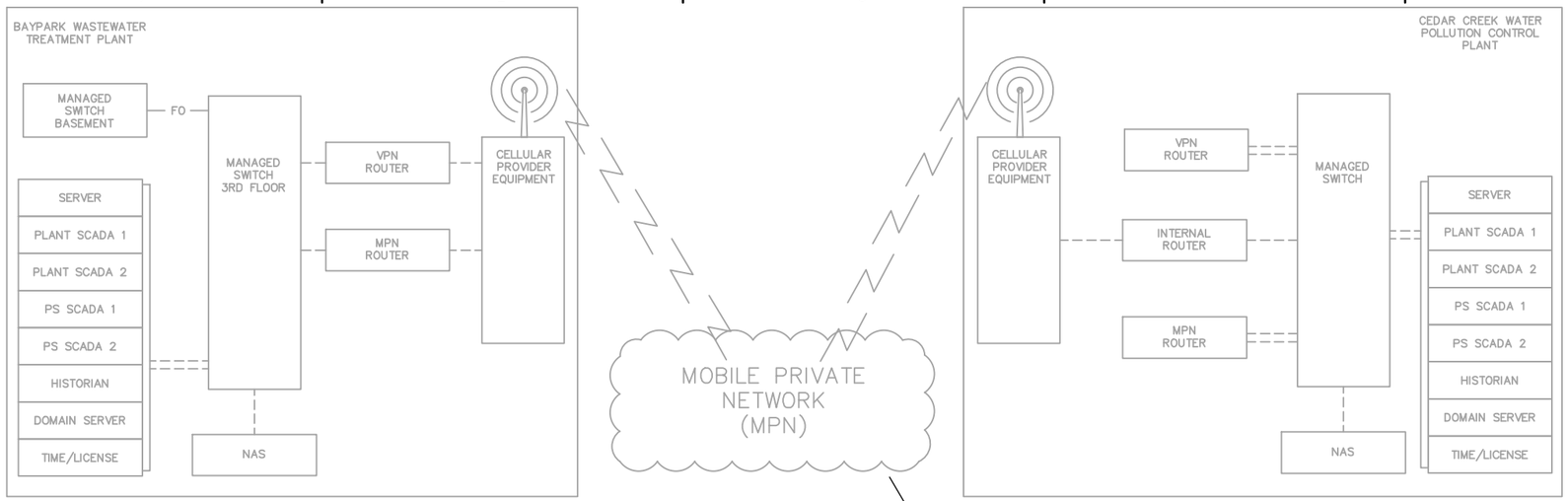

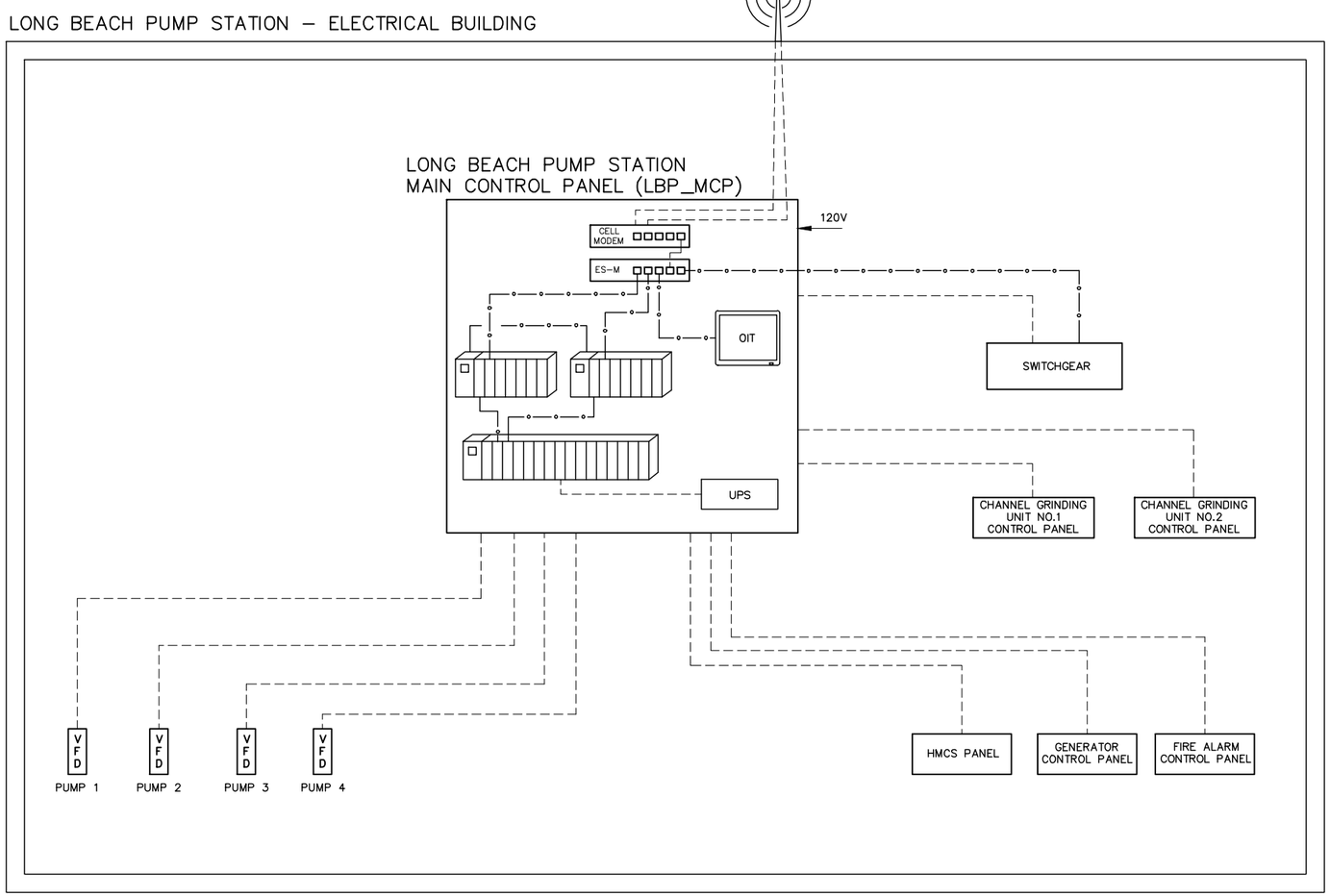

LEGEND

- PROGRAMMABLE LOGIC CONTROLLER (PLC)
- OIT — OPERATOR INTERFACE TERMINAL (OIT)
- ELECTRIC SIGNAL
- ETHERNET/COPPER CAT6 CABLE
- * — FACILITY/LOCATION LIMITS. WHERE ASTERISK (*) INDICATES NAME
- CELL MODEM — CELLULAR MODEM
- ES-M — ETHERNET SWITCH (MANAGED)
- UPS — UNINTERRUPTIBLE POWER SUPPLY
- MIMO ANTENNA

Hazen ARCADIS A JOINT VENTURE

LEGAL ENTITY:
ARCADIS CE, INC.

SEALS

NASSAU COUNTY, NEW YORK
DEPARTMENT OF PUBLIC WORKS

LONG BEACH WPCP CONSOLIDATION PUMP STATION CONVERSION

LONG BEACH WASTEWATER POLLUTION CONTROL PLANT

NO.	DATE	ISSUED FOR	BY

COPYRIGHT: 2017 HAZEN AND SAWYER/ ARCADIS A JOINT VENTURE

DATE: JULY 2020
PROJECT NO.: 00726790.0001
FILE NAME: I-02
DESIGNED BY: R.JIMENEZ
DRAWN BY: S.CHALASANI
CHECKED BY: F.ARANGO

SHEET TITLE

INSTRUMENTATION

NETWORK ARCHITECTURE BLOCK DIAGRAM

SCALE: NOT TO SCALE

I-02

SHEET 07 OF 112

User:SCHALASANI Spec:AUS-NCSMCO File:\\WY03FP01\DATA\WHI_CAD\VOL2\ACAD\PROJ\00726790.0001\SHEETS\I-02.DWG Scale:1:1 SavedDate:7/8/2020 Time:12:22 Plot Date: Chalasani, Subhash; 7/20/2020; 13:40 ; Layout:BLANK

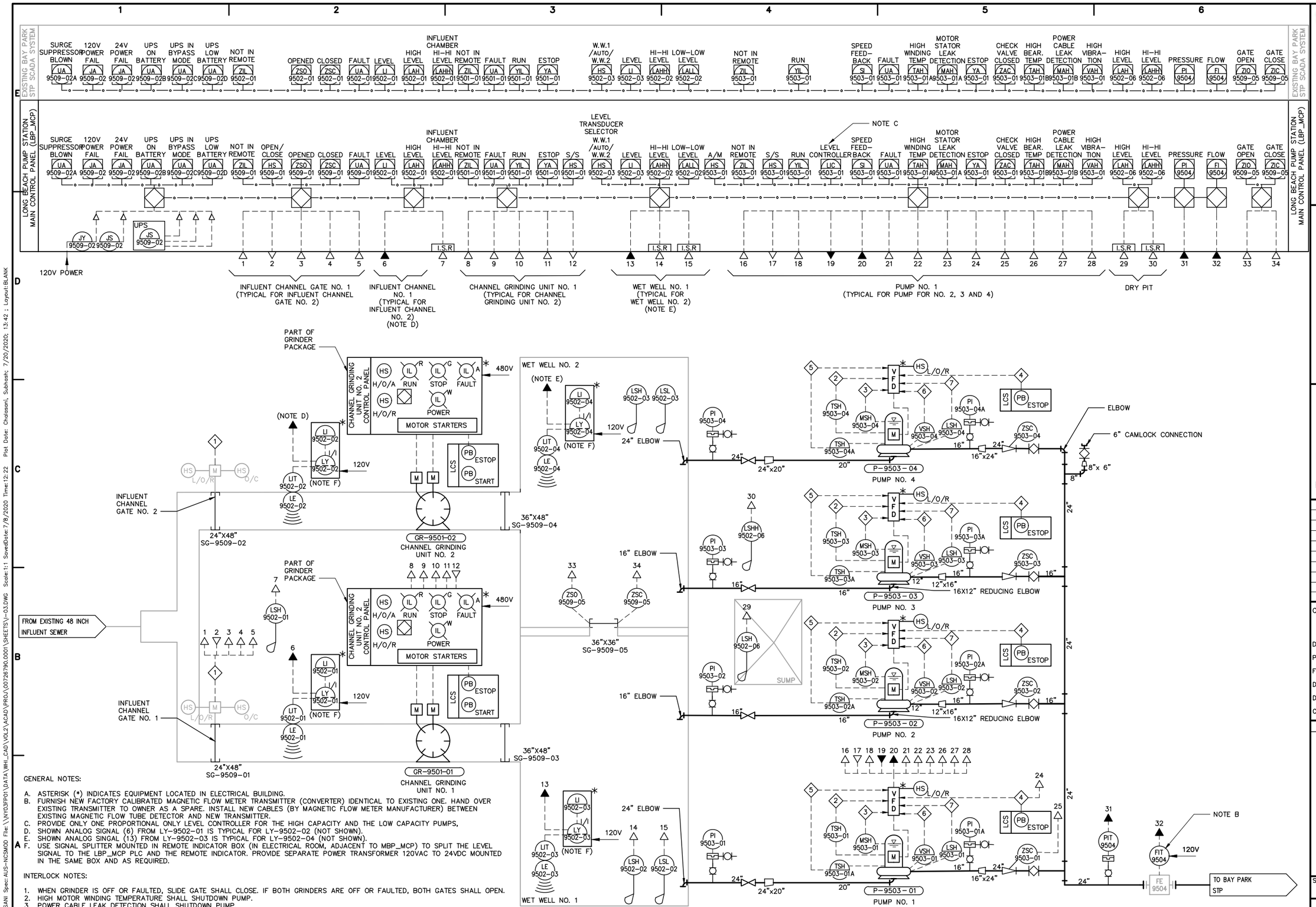

GENERAL NOTES:

A. ASTERISK (*) INDICATES EQUIPMENT LOCATED IN ELECTRICAL BUILDING.
B. FURNISH NEW FACTORY CALIBRATED MAGNETIC FLOW METER TRANSMITTER (CONVERTER) IDENTICAL TO EXISTING ONE. HAND OVER EXISTING TRANSMITTER TO OWNER AS A SPARE. INSTALL NEW CABLES (BY MAGNETIC FLOW METER MANUFACTURER) BETWEEN EXISTING MAGNETIC FLOW TUBE DETECTOR AND NEW TRANSMITTER.
C. PROVIDE ONLY ONE PROPORTIONAL ONLY LEVEL CONTROLLER FOR THE HIGH CAPACITY AND THE LOW CAPACITY PUMPS,
D. SHOWN ANALOG SIGNAL (6) FROM LY-9502-01 IS TYPICAL FOR LY-9502-02 (NOT SHOWN).
E. SHOWN ANALOG SINGAL (13) FROM LY-9502-03 IS TYPICAL FOR LY-9502-04 (NOT SHOWN).
F. USE SIGNAL SPLITTER MOUNTED IN REMOTE INDICATOR BOX (IN ELECTRICAL ROOM, ADJACENT TO MBP_MCP) TO SPLIT THE LEVEL SIGNAL TO THE LBP_MCP PLC AND THE REMOTE INDICATOR. PROVIDE SEPARATE POWER TRANSFORMER 120VAC TO 24VDC MOUNTED IN THE SAME BOX AND AS REQUIRED.

INTERLOCK NOTES:

1. WHEN GRINDER IS OFF OR FAULTED, SLIDE GATE SHALL CLOSE. IF BOTH GRINDERS ARE OFF OR FAULTED, BOTH GATES SHALL OPEN.
2. HIGH MOTOR WINDING TEMPERATURE SHALL SHUTDOWN PUMP.
3. POWER CABLE LEAK DETECTION SHALL SHUTDOWN PUMP.
4. ESTOP SHALL SHUTDOWN PUMP.
5. HIGH BEARING TEMPERATURE SHALL SHUTDOWN THE PUMP.
6. HIGH VIBRATION SHALL SHUTDOWN THE PUMP.
7. MOTOR STATOR LEAK DETECTION SHALL SHUTDOWN THE PUMP.

Hazen ARCADIS
A JOINT VENTURE

LEGAL ENTITY:
ARCADIS CE, INC.

SEALS

NASSAU COUNTY, NEW YORK
DEPARTMENT OF PUBLIC WORKS

LONG BEACH WPCP CONSOLIDATION
PUMP STATION CONVERSION

LONG BEACH WASTEWATER POLLUTION CONTROL PLANT

NO.	DATE	ISSUED FOR	BY

COPYRIGHT: 2017 HAZEN AND SAWYER/ ARCADIS A JOINT VENTURE

DATE: JULY 2020
PROJECT NO.: 00726790.0001
FILE NAME: I-03
DESIGNED BY: R.JIMENEZ
DRAWN BY: S.CHALASANI
CHECKED BY: F.ARANGO

SHEET TITLE

INSTRUMENTATION

PUMP STATION P&ID

SCALE: NOT TO SCALE

I-03

SHEET 08 OF 112

User:SCHALASANI Spec:AUS-NCSMOD File:\\WY03FP01\DATA\WHI_CAD\VOL2\ACAD\PROJ\00726790.0001\SHEETS\I-03.DWG Scale:1:1 SavedDate:7/8/2020 Time:12:22 Plot Date: Chalasani, Subhash; 7/20/2020; 13:42 ; Layout:BLANK

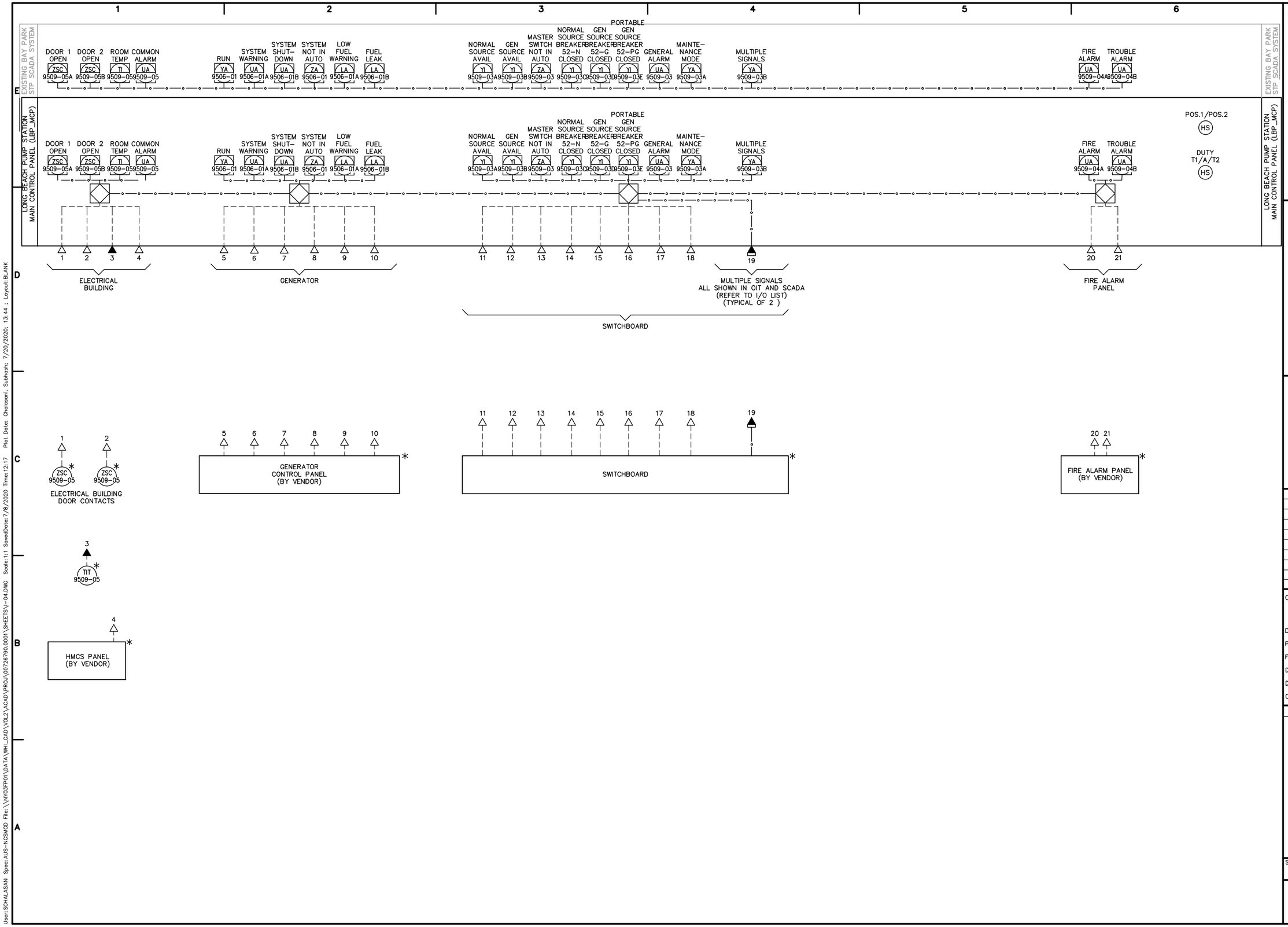

Hazen ARCADIS
A JOINT VENTURE

LEGAL ENTITY:
ARCADIS CE, INC.

SEALS

NASSAU COUNTY, NEW YORK
DEPARTMENT OF PUBLIC WORKS

LONG BEACH WPCP CONSOLIDATION
PUMP STATION CONVERSION

LONG BEACH WASTEWATER POLLUTION CONTROL PLANT

NO.	DATE	ISSUED FOR	BY

COPYRIGHT: 2017 HAZEN AND SAWYER/ ARCADIS A JOINT VENTURE

DATE: JULY 2020
PROJECT NO.: 00726790.0001
FILE NAME: I-04
DESIGNED BY: R.JIMENEZ
DRAWN BY: S.CHALASANI
CHECKED BY: F.ARANGO

SHEET TITLE

INSTRUMENTATION

ELECTRICAL ROOM P&ID

SCALE: NOT TO SCALE

I-04

SHEET 09 OF 112

User:SCHALASANI Spec:AUS-NCSMOD File:\\NY03FP01\DATA\WH_CAD\VOL2\ACAD\PROJ\00726790.0001\SHEETS\I-04.DWG Scale:1:1 SavedDate:7/8/2020 Time:12:17 Plot Date: Chalasani, Subhash; 7/20/2020; 13:44 ; Layout:BLANK

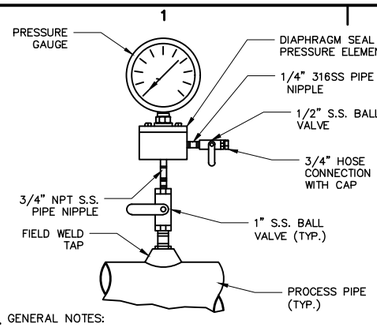

GENERAL NOTES:

A. PROVIDE HARDWARE AND APPURTENANCES TO FULLY SUPPORT SWITCHES.

1 / I-05 PRESSURE GAUGE

NOT TO SCALE

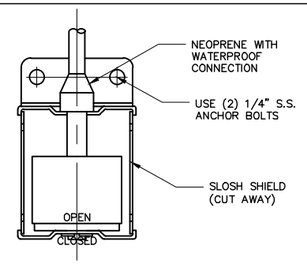

2 / I-05 LEVEL SWITCH (REED)

NOT TO SCALE

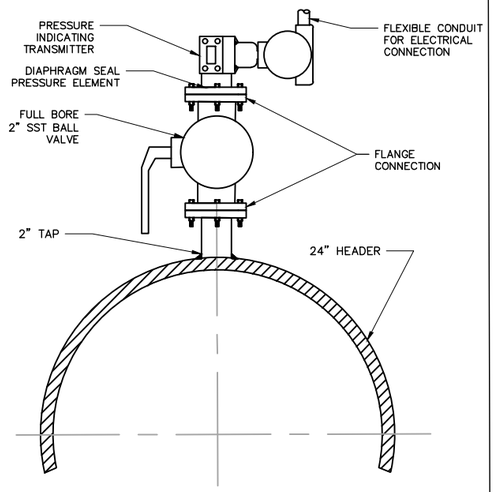

NOTES:

1. CONTRACTOR SHALL PROVIDE AND INSTALL NEW NEOPRENE GASKETS, NUTS, BOLTS AND WASHERS.
2. MATERIAL FOR ALL NUTS, BOLTS AND WASHERS SHALL BE ASTM A307, GRADE "A" WITH TRIPAC 2000 BLUE COATING SYSTEM.
3. BOLT QUANTITY AND SIZE SHALL BE VERIFIED AND COORDINATED IN FIELD BY CONTRACTOR.

3 / I-05 PRESSURE TRANSMITTER

NOT TO SCALE

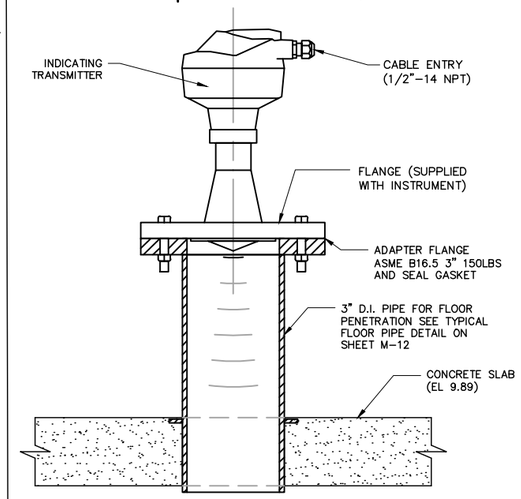

GENERAL NOTES:

A. INSTALL DIRECTILY ABOVE INFULENT GRINDER CHANNEL CENTERLINE

4 / I-05 RADAR LEVEL INDICATING TRANSMITTER

NOT TO SCALE

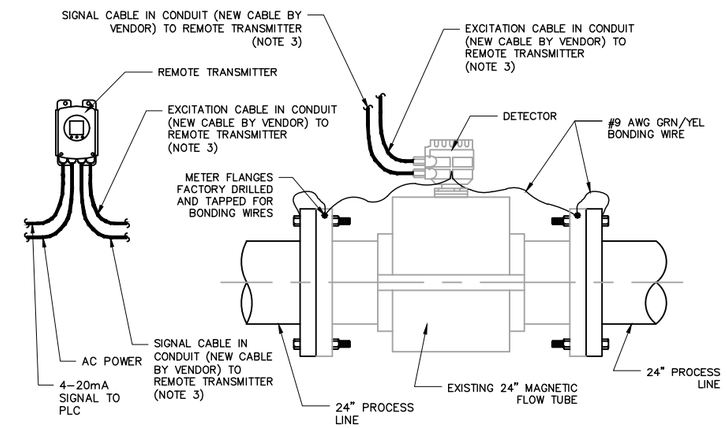

NOTES:

1. FLOW METER DETAIL SHOWN SHALL BE USED FOR BOTH ELECTRICALLY NON-CONDUCTIVE AND CONDUCTIVE TYPE PIPELINES.
2. BOND MAGNETIC FLOW METER TO ONE OF THE FOLLOWING ACCEPTABLE GROUNDS:
   a. METALLIC WATER PIPE IF BURIED PORTION IS MORE THAN 10 FEET.
   b. STRUCTURAL STEEL
3. REMOTE TRANSMITTER SHALL BE LOCATED IN A SUITABLE LOCATION. TRANSMITTER SHALL BE PEDESTAL MOUNTED OR WALL MOUNTED AS REQUIRED. FURNISH NEW VENDOR WIRING FROM TUBE TO TRANSMITTER AS SHOWN.
4. PROVIDE SURGE SUPPRESSOR ON OUTDOOR INSTALLATIONS.
5. GROUND WIRE SHALL BE NO. 12AWG INSULATED. IF LENGTH OF GROUND WIRE IS MORE THAN 6 FEET, INSTALL CONDUCTOR IN 3/4" CONDUIT.
6. SIGNAL CABLE TO PLC SHALL BE INSTALLED IN CONDUIT. CONDUIT NOT SHOWN.
7. PROVIDE POWER TO TRANSMITTER. POWER WIRING AND CONDUIT NOT SHOWN.

5 / I-05 MAGNETIC FLOW METER

NOT TO SCALE

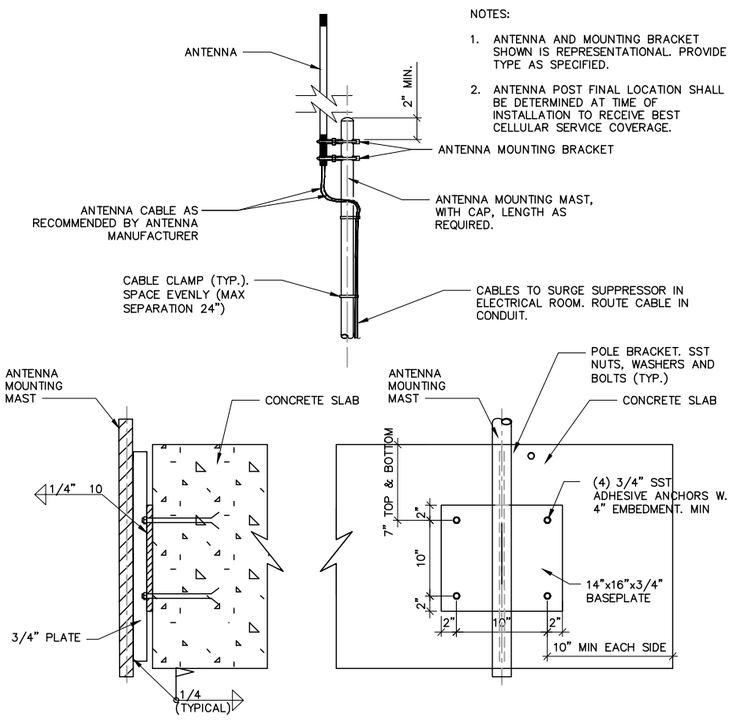

NOTES:

1. ANTENNA AND MOUNTING BRACKET SHOWN IS REPRESENTATIONAL. PROVIDE TYPE AS SPECIFIED.
2. ANTENNA POST FINAL LOCATION SHALL BE DETERMINED AT TIME OF INSTALLATION TO RECEIVE BEST CELLULAR SERVICE COVERAGE.

6 / I-05 OMNI DIRECTIONAL CELLULAR ANTENNA

NOT TO SCALE

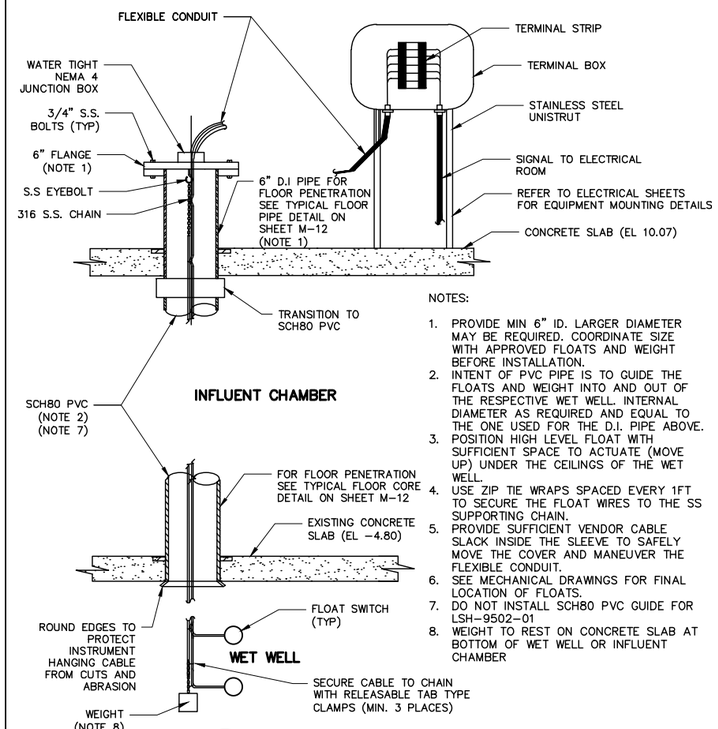

NOTES:

1. PROVIDE MIN 6" ID. LARGER DIAMETER MAY BE REQUIRED. COORDINATE SIZE WITH APPROVED FLOATS AND WEIGHT BEFORE INSTALLATION.
2. INTENT OF PVC PIPE IS TO GUIDE THE FLOATS AND WEIGHT INTO AND OUT OF THE RESPECTIVE WET WELL. INTERNAL DIAMETER AS REQUIRED AND EQUAL TO THE ONE USED FOR THE D.I. PIPE ABOVE.
3. POSITION HIGH LEVEL FLOAT WITH SUFFICIENT SPACE TO ACTUATE (MOVE UP) UNDER THE CEILINGS OF THE WET WELL.
4. USE ZIP TIE WRAPS SPACED EVERY 1FT TO SECURE THE FLOAT WIRES TO THE SS SUPPORTING CHAIN.
5. PROVIDE SUFFICIENT VENDOR CABLE SLACK INSIDE THE SLEEVE TO SAFELY MOVE THE COVER AND MANEUVER THE FLEXIBLE CONDUIT.
6. SEE MECHANICAL DRAWINGS FOR FINAL LOCATION OF FLOATS.
7. DO NOT INSTALL SCH80 PVC GUIDE FOR LSH-9502-01
8. WEIGHT TO REST ON CONCRETE SLAB AT BOTTOM OF WET WELL OR INFLUENT CHAMBER

7 / I-05 FLOAT SWITCH

NOT TO SCALE

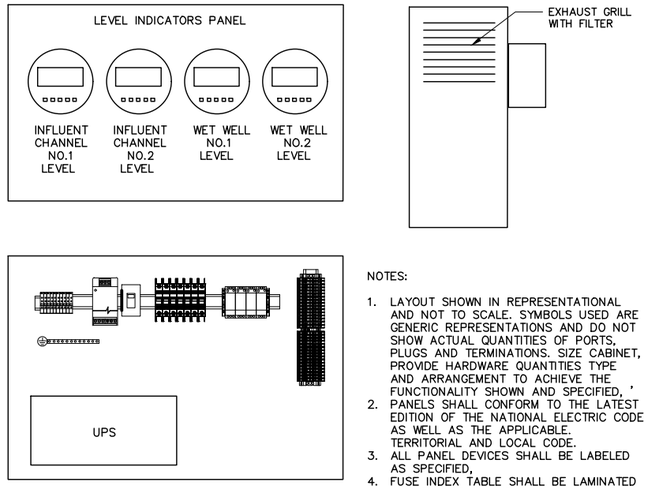

NOTES:

1. LAYOUT SHOWN IN REPRESENTATIONAL AND NOT TO SCALE. SYMBOLS USED ARE GENERIC REPRESENTATIONS AND DO NOT SHOW ACTUAL QUANTITIES OF PORTS, PLUGS AND TERMINATIONS. SIZE CABINET, PROVIDE HARDWARE QUANTITIES TYPE AND ARRANGEMENT TO ACHIEVE THE FUNCTIONALITY SHOWN AND SPECIFIED, '
2. PANELS SHALL CONFORM TO THE LATEST EDITION OF THE NATIONAL ELECTRIC CODE AS WELL AS THE APPLICABLE. TERRITORIAL AND LOCAL CODE.
3. ALL PANEL DEVICES SHALL BE LABELED AS SPECIFIED,
4. FUSE INDEX TABLE SHALL BE LAMINATED AND PLACED IN THE DOOR POCKET ON THE INSIDE OF EACH ENCLOSURE DOOR,
5. MOUNT INDICATORS 5FT. AFF. AND ACCESSIBLE TO OPERATORS.

8 / I-05 REMOTE LEVEL INDICATORS

NOT TO SCALE

Hazen ARCADIS A JOINT VENTURE

LEGAL ENTITY:
ARCADIS CE, INC.

SEALS

NASSAU COUNTY, NEW YORK
DEPARTMENT OF PUBLIC WORKS

LONG BEACH WPCP CONSOLIDATION
PUMP STATION CONVERSION

LONG BEACH WASTEWATER POLLUTION CONTROL PLANT

NO.	DATE	ISSUED FOR	BY

COPYRIGHT: 2017 HAZEN AND SAWYER/ ARCADIS A JOINT VENTURE

DATE:	JULY 2020
PROJECT NO.:	00726790.0001
FILE NAME:	I-05
DESIGNED BY:	R.JIMENEZ
DRAWN BY:	S.CHALASANI
CHECKED BY:	F.ARANGO

SHEET TITLE

INSTRUMENTATION

INSTALLATION AND MOUNTING DETAILS

SCALE: NOT TO SCALE

I-05

SHEET 10 OF 112

User:SCHALASANI Spec:AUS-NCSMOD File:\\NY03FP01\DATA\WH_CAD\VOL2\ACAD\PROJ\00726790.0001\SHEETS\I-05.DWG Scale:1:1 SavedDate:7/8/2020 Time:12:22 Plot Date: Chalasani, Subhash; 7/20/2020; 13:46 ; Layout:BLANK

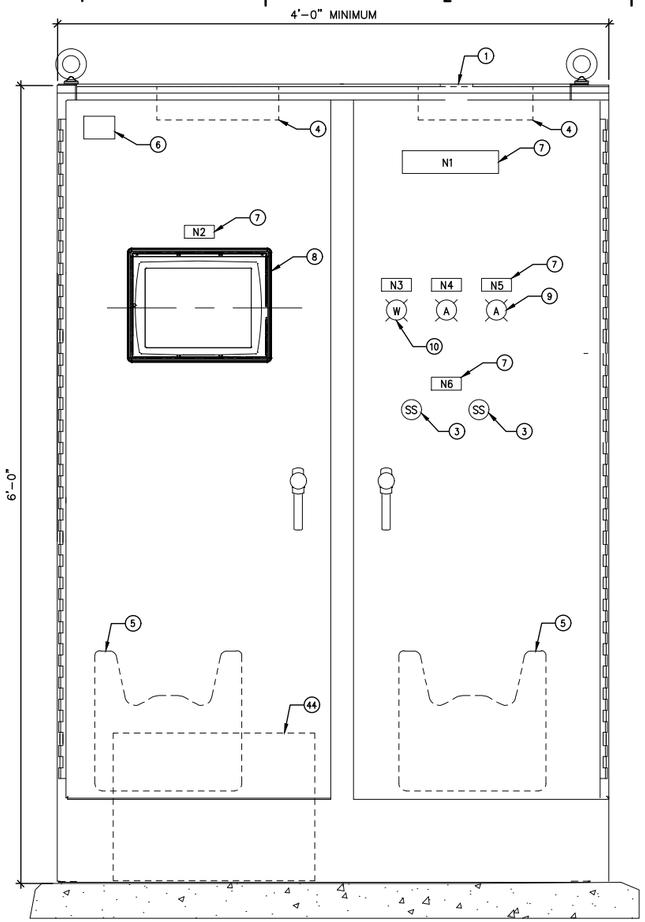

FRONT VIEW

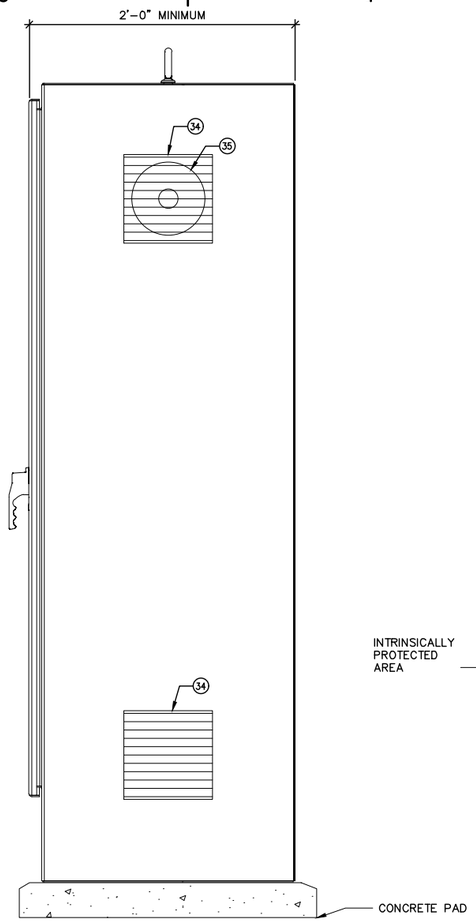

SIDE VIEW

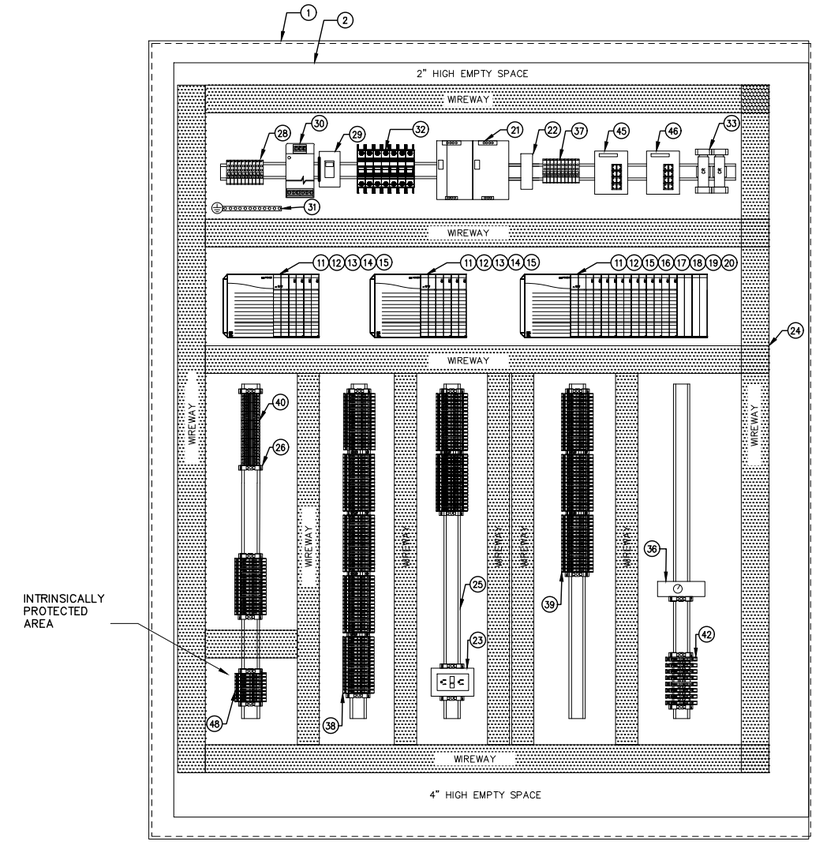

INTERIOR VIEW
BACK PANEL

MATERIAL LIST	
ITEM	DESCRIPTION
1	ENCLOSURE: FREE STAND, 2-DOOR, NEMA 12, 304S.S.
2	BACK PANEL, 68"HX68"W MIN.
3	SELECTOR SWITCH
4	PANEL LAMP, 120VAC, AUTOMATIC ON/OFF SWITCH
5	DATA POCKET
6	UL LABELS FOR UL-508, UL-508A, AND UL-698A
7	NAMEPLATE (SIZE VARIES)
8	OPERATOR INTERFACE TERMINAL (OIT)
9	INDICATOR LIGHT, AMBER
10	INDICATOR LIGHT, WHITE
11	PLC: CHASSIS
12	PLC: POWER SUPPLY
13	PLC: PROCESSOR
14	PLC: DNP3 MODULE
15	PLC: ETHERNET BRIDGE MODULE

MATERIAL LIST	
ITEM	DESCRIPTION
16	PLC: I/O CARD (DI) - 16 POINT AC INPUT
17	PLC: I/O CARD (DO) - 16 POINT AC OUTPUT
18	PLC: I/O CARD (AI) - 16 POINT ANALOG INPUT
19	PLC: I/O CARD (AO) - 8 POINT ANALOG OUTPUT
20	PLC: MODULE FILLER
21	24VDC POWER SUPPLY
22	REDUNDANCY 24VDC POWER SUPPLY
23	GFCI UTILITY RECEPTACLE, 2 PORT
24	WIREWAY
25	DIN RAIL
26	END CLAMP
27	BLOCK AND END CLAMP MARKING SYSTEM (NOT SHOWN)
28	MAIN INCOMING SUPPLY TERMINALS
29	MAIN DISCONNECT SWITCH
30	SURGE PROTECTION FOR AC POWER
31	GROUND BUS BAR

MATERIAL LIST	
ITEM	DESCRIPTION
32	CIRCUIT BREAKER, 120V
33	POWER FAIL RELAY
34	EXHAUST GRILL, WITH FILTER
35	COOLING FAN, 120VAC
36	THERMOSTAT
37	TERMINAL BLOCK
38	TERMINAL BLOCK FOR DISCRETE IO
39	TERMINAL BLOCK FOR ANALOG IO
40	CONTROL RELAY
41	SURGE PROTECTORS FOR FIELD WIRING (NOT SHOWN)
42	INTERPOSING RELAY
43	FIBER PATCH PANEL
44	UNINTERRUPTIBLE POWER SUPPLY (UPS) (NOTE 7)
45	CELLULAR ROUTER
46	ETHERNET SWITCH (MANAGED)
47	TAMPER SWITCH (NOT SHOWN)
48	INTRINSICALLY SAFE RELAYS

NOTES:

1. LAYOUT SHOWN IS REPRESENTATIONAL AND NOT TO SCALE. SYMBOLS USED ARE GENERIC REPRESENTATIONS AND DO NOT SHOW ACTUAL QUANTITIES OF PORTS, PLUGS, AND TERMINATIONS. SIZE CABINET, PROVIDE HARDWARE QUANTITIES, TYPE, AND ARRANGEMENT TO ACHIEVE THE FUNCTIONALITY SHOWN AND SPECIFIED.
2. QUANTITY OF PLC I/O MODULES, CIRCUIT BREAKERS, SURGE SUPPRESSORS, RELAYS, TERMINAL BLOCKS, PUSHBUTTONS, INDICATING LIGHTS, AND SELECTOR SWITCHES SHOWN ARE REPRESENTATIVE. PROVIDE QUANTITIES TO ACHIEVE THE FUNCTIONALITY SHOWN AND SPECIFIED.
3. PLC INPUT/OUTPUT POINTS SHALL BE ARRANGED SUCH THAT, FAILURE OF A GIVEN I/O CARD WILL NOT CAUSE SHUTDOWN OF MORE THAN ONE OF THE SAME TYPE OF EQUIPMENT IN A GIVEN PROCESS.
4. PANELS SHALL CONFORM TO THE LATEST EDITION OF THE NATIONAL ELECTRIC CODE AS WELL AS THE APPLICABLE TERRITORIAL AND LOCAL CODE.
5. ALL PANEL DEVICES SHALL BE LABELED AS SPECIFIED.
6. FUSE INDEX TABLE SHALL BE LAMINATED AND PLACED IN THE DOOR POCKET ON THE INSIDE OF EACH ENCLOSURE DOOR.
7. UPS SHALL BE LOCATED INSIDE PANEL ON FLOOR OF PANEL. PROVIDE AN ADDITIONAL 3-FEET MINIMUM OF WIRE LENGTH FOR ALL WIRING TO/FROM UPS TO ALLOW UPS TO BE REMOVED FROM PANEL WITHOUT DISCONNECTING. UPS LOCATION SHALL NOT CAUSE INTERFERENCE WITH OTHER HARDWARE IN PANEL.
8. PROVIDE MINIMUM 1-FT CLEARANCE ON RIGHT SIDE OF ENCLOSURE TO ALLOW AIR FLOW FOR EXHAUST FAN/GRILLS.
9. HEAT LOAD CALCULATIONS MAY DETERMINE THE NEED OF AN AIR CONDITIONING UNIT (NOT SHOWN).

NAMEPLATES	
NO.	ENGRAVING
N1	PUMP STATION MAIN CONTROL PANEL
N2	OIT
N3	POWER
N4	COMMUNICATION FAIL
N5	COMMON ALARM
N6	TRAIN 1 / AUTO / TRAIN 2

LONG BEACH PUMP STATION MAIN CONTROL PANEL
LAYOUT
NOT TO SCALE

Hazen ARCADIS
A JOINT VENTURE

LEGAL ENTITY:
ARCADIS CE, INC.

SEALS

NASSAU COUNTY, NEW YORK
DEPARTMENT OF PUBLIC WORKS

LONG BEACH WPCP CONSOLIDATION
PUMP STATION CONVERSION

LONG BEACH WASTEWATER POLLUTION CONTROL PLANT

NO.	DATE	ISSUED FOR	BY

COPYRIGHT: 2017 HAZEN AND SAWYER/ ARCADIS A JOINT VENTURE

DATE: JULY 2020
PROJECT NO.: 00726790.0001
FILE NAME: I-06
DESIGNED BY: R.JIMENEZ
DRAWN BY: S.CHALASANI
CHECKED BY: F.ARANGO

SHEET TITLE
INSTRUMENTATION
PANEL LAYOUT

SCALE: NOT TO SCALE

I-06
SHEET 11 OF 112

User:SCHALASANI Spec:AUS-NCSMCO File:\\WY03FP01\DATA\WHL_CAD\VOL2\ACAD\PROJ\00726790.0001\SHEETS\I-06.DWG Scale:1:1 SavedDate:7/8/2020 Time:12:22 Plot Date: Chalasani, Subhash; 7/20/2020; 13:47 ; Layout:I-06

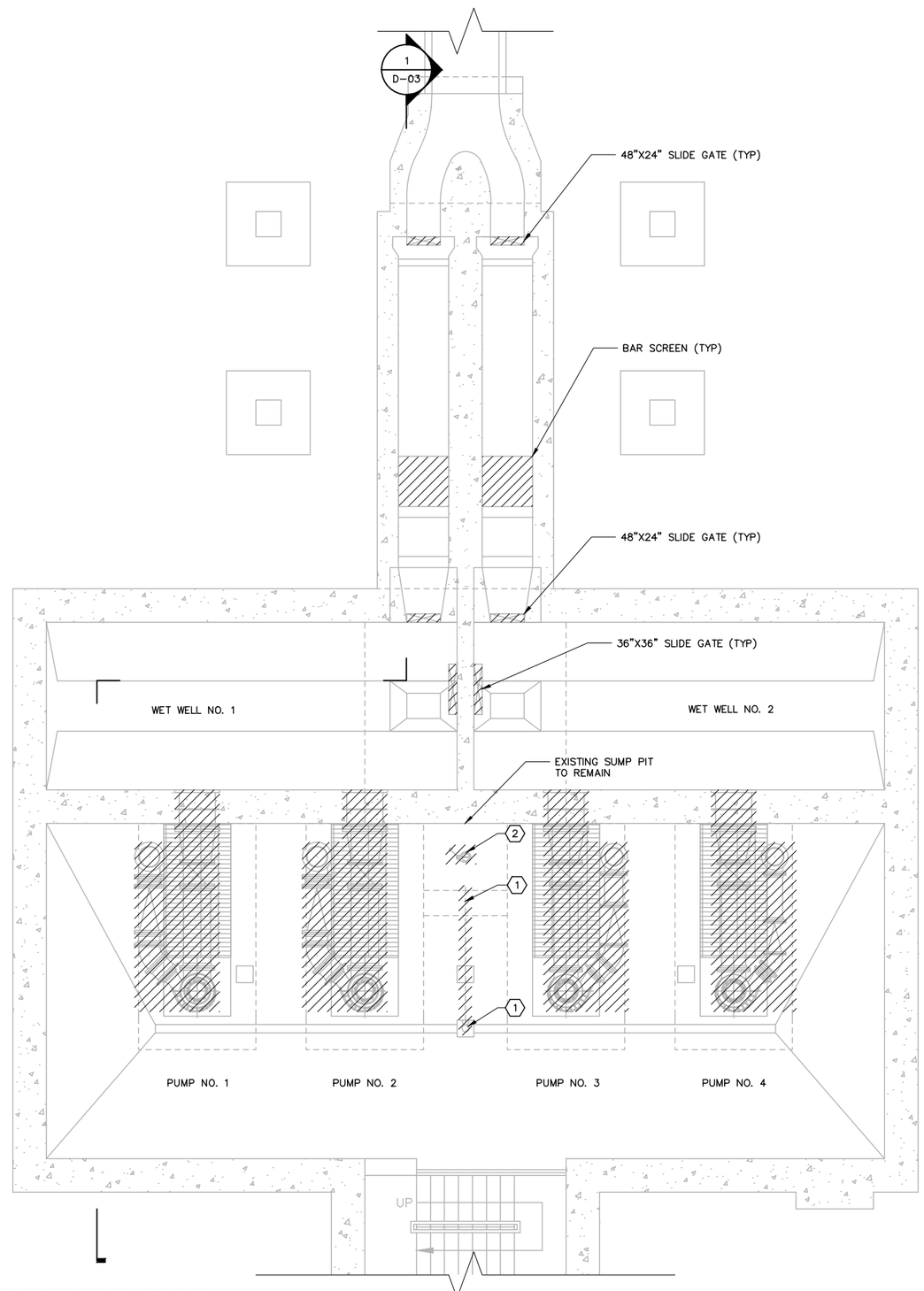

BASEMENT PLAN

SCALE: 1/4" = 1'-0"

0 2' 4' 8'

N

NOTES:

1. DEMOLISH SLIDE GATES, SLIDE GATE STEM, SUPPORTS, AND APPURTENANCES.
2. DEMOLISH PUMPS, PIPING, ASSOCIATED PUMP AND PIPE SUPPORTS, AND APPURTENANCES.
3. FOR STRUCTURAL DEMOLITION, SEE SHEETS D-04 THROUGH D-06.

DEMOLITION KEY NOTES:

1. CONTRACTOR TO DEMOLISH EXISTING FLOOR DRAIN AT BOTTOM OF TRENCH AND ASSOCIATED PIPING AND FITTINGS.
2. CONTRACTOR TO DEMOLISH EXISTING SUMP PUMP AND ASSOCIATED DISCHARGE PIPING AND FITTINGS UP TO EXISTING CHECK VALVE. CAP PIPING AT CHECK VALVE INLET FOR FUTURE CONNECTION. SEE SUMP PUMP DETAIL ON P-03 FOR MORE INFORMATION.

Hazen ARCADIS
A JOINT VENTURE

LEGAL ENTITY:
ARCADIS CE, INC.

SEALS

STATE OF NEW YORK
LANGSTON S. JOAPS
No. 093357
LICENSED PROFESSIONAL ENGINEER
7/20

NASSAU COUNTY, NEW YORK
DEPARTMENT OF PUBLIC WORKS

LONG BEACH WPCP CONSOLIDATION
PUMP STATION CONVERSION

LONG BEACH WASTEWATER POLLUTION CONTROL PLANT

NO.	DATE	ISSUED FOR	BY

COPYRIGHT: 2017 HAZEN AND SAWYER/ ARCADIS A JOINT VENTURE

DATE: JULY 2020
PROJECT NO.: 00726790.0001
FILE NAME: D-01
DESIGNED BY: L. JONES
DRAWN BY: J. MA
CHECKED BY: L. JONES

SHEET TITLE

DEMOLITION

EXISTING AND DEMOLITION BOTTOM PLAN (MECHANICAL)

SCALE: 1/4" = 1'-0"

D-01

SHEET 12 OF 112

User:SWOHLFAHRT Spec:AUS-NCSMOD File:\\NYO3FP01\DATA\WHI_CAD\VOL2\ACAD\PROJ\00726790.0001\SHEETS\D-01.DWG Scale:1:1 SavedDate:6/30/2020 Time:12:52 Plot Date: Wohlfahrt, Sarah; 7/20/2020; 14:59 ; Layout:LAYOUT1

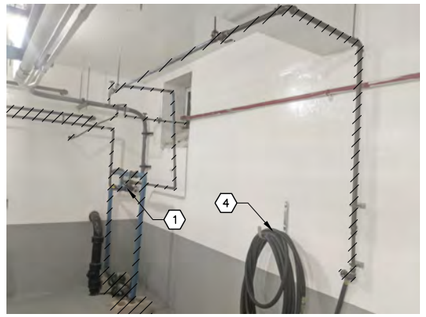

1 D-02 CONNECTION TO POTABLE WATER

SCALE: NOT TO SCALE

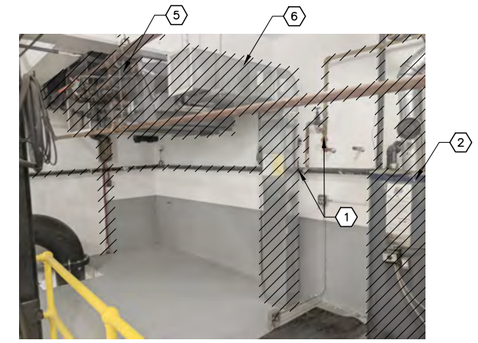

2 D-02 HVAC DUCTWORK

SCALE: NOT TO SCALE

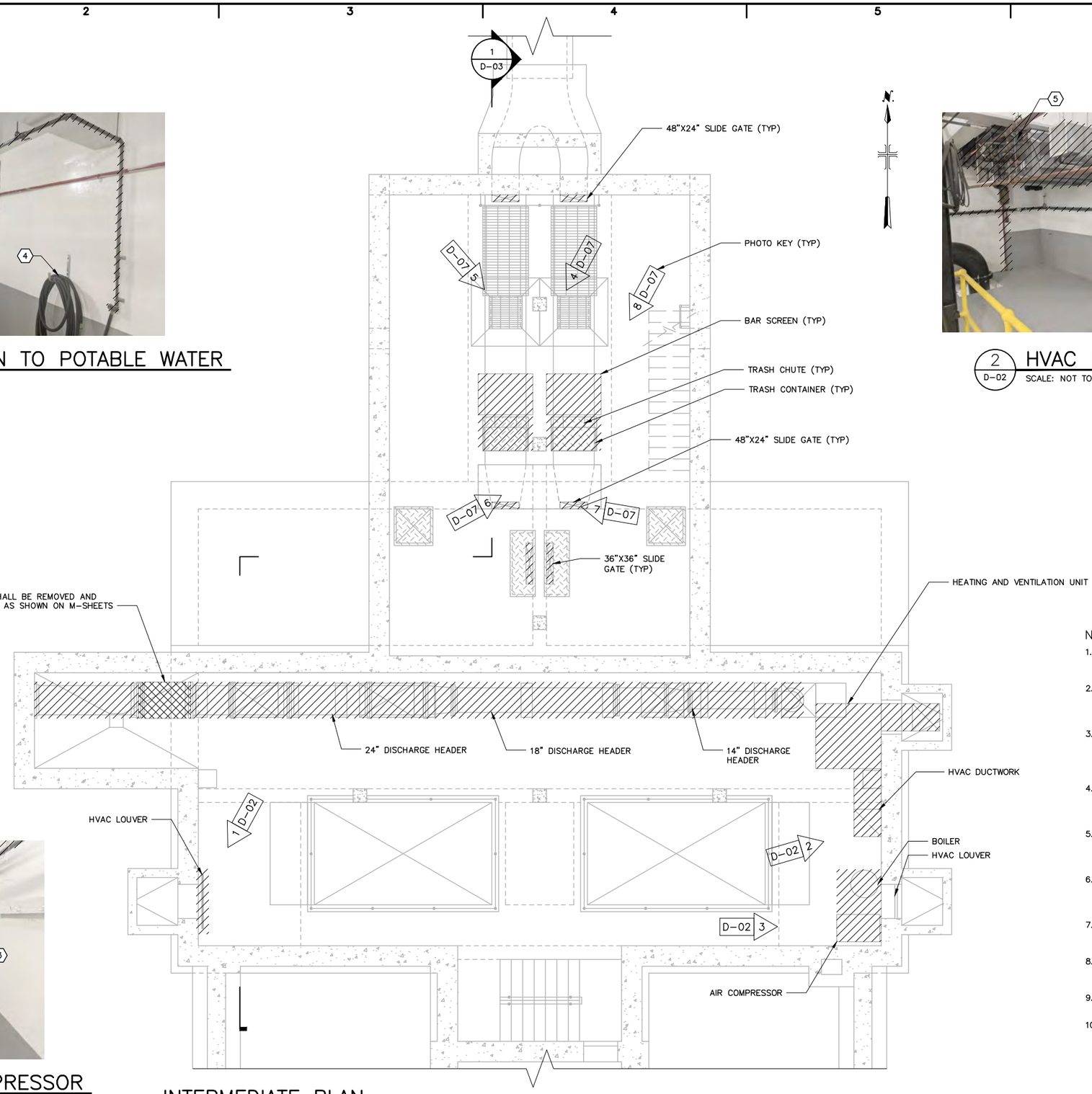

INTERMEDIATE PLAN

SCALE: 1/4" = 1'-0"

0 2' 4' 8'

DEMOLITION KEY NOTES:

1. DEMOLISH WATER PIPE UP TO EXISTING SHUT-OFF VALVE.
2. BOILER
3. AIR COMPRESSOR
4. RE-USE EXISTING HOSE
5. HVAC UNIT AND PIPING ACCESSORIES
6. HVAC DUCTWORK

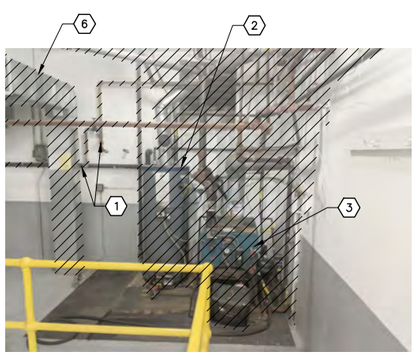

3 D-02 BOILER AND AIR COMPRESSOR

SCALE: NOT TO SCALE

NOTES:

1. DEMOLISH SLIDE GATES, SLIDE GATE STEM, SUPPORTS, AND APPURTENANCES.
2. DEMOLISH PUMPS, PIPING, ASSOCIATED PUMP AND PIPE SUPPORTS, AND APPURTENANCES.
3. DEMOLISH BAR SCREENS, ASSOCIATED STRUCTURAL FRAMING, TRASH CHUTE, TRASH CONTAINER, AND APPURTENANCES.
4. DEMOLISH HVAC DUCTWORK, SUPPORTS, ASSOCIATED HVAC PIPING, PIPE SUPPORTS, AND APPURTENANCES.
5. DEMOLISH BOILER, AIR COMPRESSOR, ASSOCIATED PIPING, PIPE SUPPORTS, AND APPURTENANCES.
6. REMOVE EXISTING TRASH RACKS AND COORDINATE WITH OWNER FOR STORAGE LOCATION.
7. REMOVE EXISTING HOSE AND COORDINATE WITH OWNER FOR STORAGE LOCATION.
8. DEMOLISH EXISTING BUCKETS, CONES, DEBRIS, AND UNISTRUT FRAMING.
9. EXISTING BUILDING DRAINAGE PIPING TO REMAIN.
10. FOR STRUCTURAL DEMOLITION, SEE SHEETS D-04 THROUGH D-06.

Hazen ARCADIS A JOINT VENTURE

LEGAL ENTITY:
ARCADIS CE, INC.

SEALS

STATE OF NEW YORK · JANGSTON S. JOAFS · No. 093357 · LICENSED PROFESSIONAL ENGINEER

NASSAU COUNTY, NEW YORK
DEPARTMENT OF PUBLIC WORKS

LONG BEACH WPCP CONSOLIDATION PUMP STATION CONVERSION

LONG BEACH WASTEWATER POLLUTION CONTROL PLANT

NO.	DATE	ISSUED FOR	BY

COPYRIGHT: 2017 HAZEN AND SAWYER/ ARCADIS A JOINT VENTURE

DATE: JULY 2020
PROJECT NO.: 00726790.0001
FILE NAME: D-02
DESIGNED BY: L. JONES
DRAWN BY: J. MA
CHECKED BY: L. JONES

SHEET TITLE

DEMOLITION

EXISTING AND DEMOLITION INTERMEDIATE PLAN (MECHANICAL)

SCALE: AS SHOWN

D-02

SHEET 13 OF 112

User:SWOHLFAHRT Spec:AUS-NCSMOD File:\\NYO3FP01\DATA\WH_CAD\VOL2\ACAD\PROJ\00726790.0001\SHEETS\D-02.DWG Scale:1:1 SavedDate:6/30/2020 Time:10:49 Plot Date: Wohlfahrt, Sarah; 7/20/2020; 15:02 : Layout:LAYOUT1

NOTES:

1. DEMOLISH SLIDE GATES, SLIDE GATE STEM, SUPPORTS, AND APPURTENANCES.
2. DEMOLISH PUMPS, PIPING, ASSOCIATED PUMP AND PIPE SUPPORTS, AND APPURTENANCES.
3. DEMOLISH BAR SCREENS, ASSOCIATED STRUCTURAL FRAMING, TRASH CHUTE, TRASH CONTAINER, AND APPURTENANCES.
4. EXISTING BUILDING DRAINAGE PIPING TO REMAIN.
5. PUMP DEMOLITION IS SIMILAR FOR ALL FOUR SEWAGE PUMPS.
6. FOR STRUCTURAL DEMOLITION, SEE SHEETS D–04 THROUGH D–06.

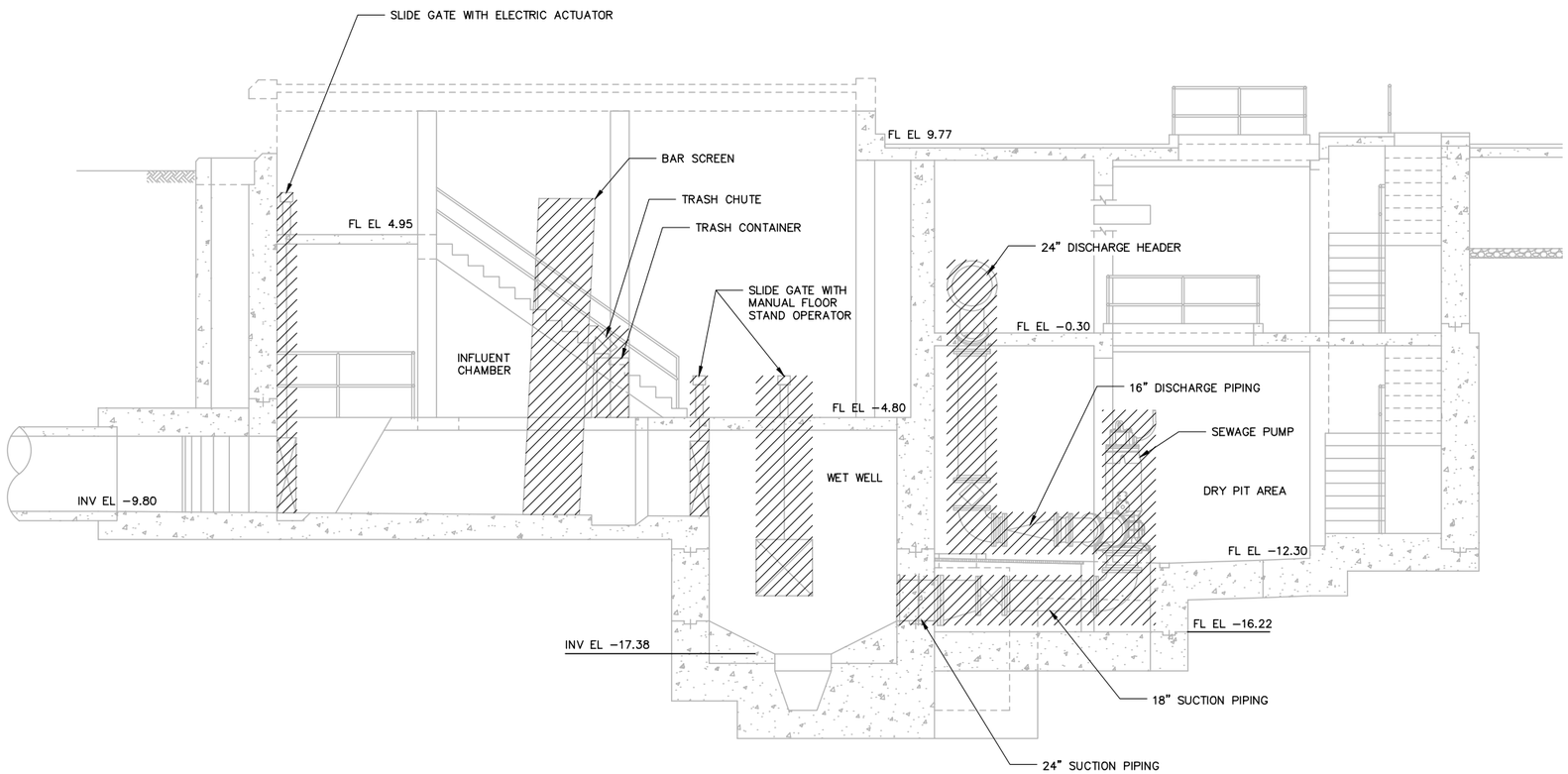

1 D–01 SECTION

SCALE: 1/4" = 1'–0"

0 2' 4' 8'

Hazen ARCADIS A JOINT VENTURE

LEGAL ENTITY:
ARCADIS CE, INC.

SEALS

STATE OF NEW YORK · NANGSTON S. JOAFS · No. 093357 · LICENSED PROFESSIONAL ENGINEER

NASSAU COUNTY, NEW YORK
DEPARTMENT OF PUBLIC WORKS

LONG BEACH WPCP CONSOLIDATION PUMP STATION CONVERSION

LONG BEACH WASTEWATER POLLUTION CONTROL PLANT

NO.	DATE	ISSUED FOR	BY

COPYRIGHT: 2017 HAZEN AND SAWYER/ ARCADIS A JOINT VENTURE

DATE: JULY 2020
PROJECT NO.: 00726790.0001
FILE NAME: D–03
DESIGNED BY: L. JONES
DRAWN BY: J. MA
CHECKED BY: L. JONES

SHEET TITLE

DEMOLITION

EXISTING AND DEMOLITION SECTION (MECHANICAL)

SCALE: 1/4" = 1'–0"

D–03

SHEET 14 OF 112

User:SWOHLFAHRT Spec:AUS-NCSMOD File:\\NY03FP01\DATA\WHI_CAD\VOL2\ACAD\PROJ\00726790.0001\SHEETS\D-03.DWG Scale:1:1 SavedDate:6/30/2020 Time:13:03 Plot Date: Wohlfahrt, Sarah; 7/20/2020; 15:05 ; Layout:LAYOUT1

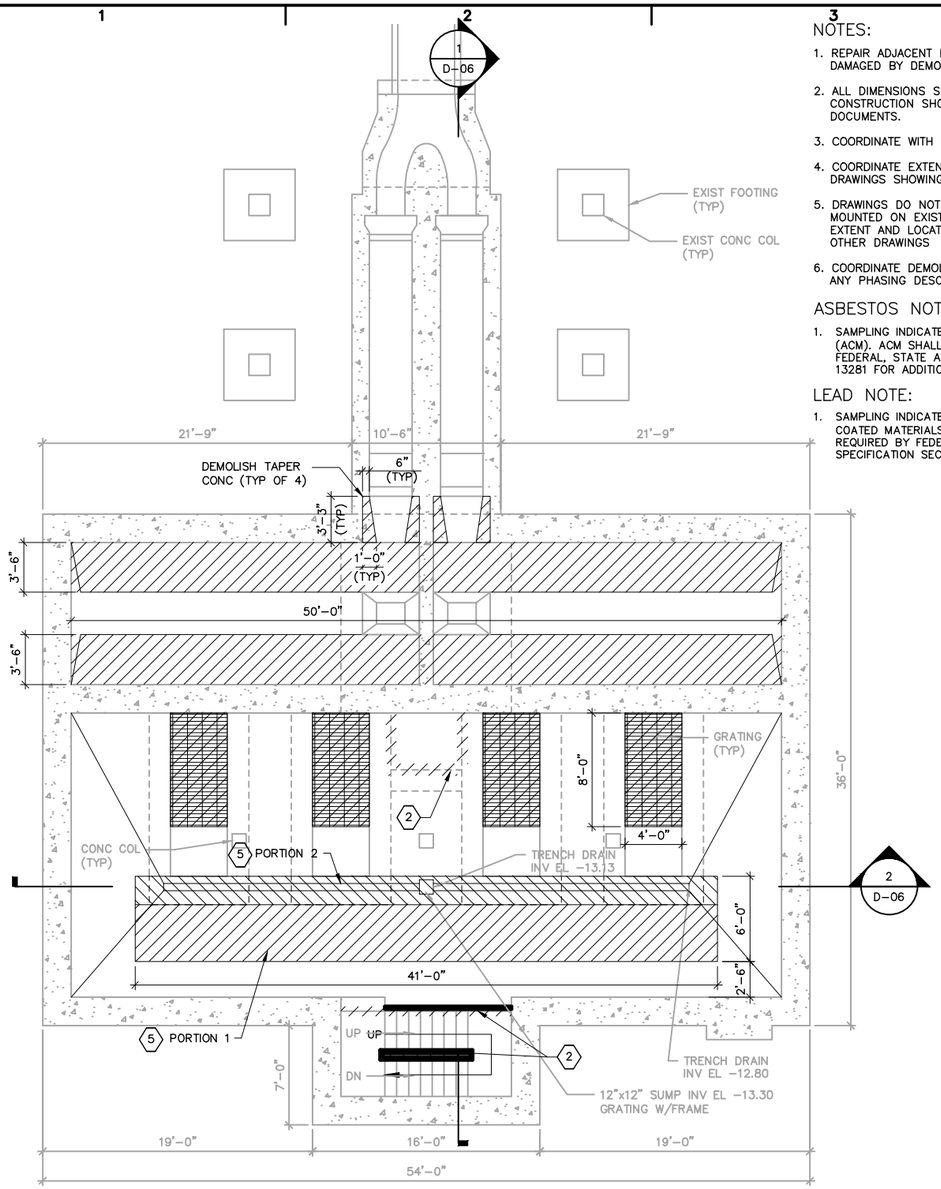

FOUNDATION PLAN AT EL -12.30

SCALE: 3/16" = 1'-0"

0 4' 8' 12'

NOTES:

1. REPAIR ADJACENT EXISTING CONSTRUCTION TO REMAIN THAT IS DAMAGED BY DEMOLITION.
2. ALL DIMENSIONS SHALL BE FIELD VERIFIED. EXISTING CONSTRUCTION SHOWN IS BASED ON EXISTING CONSTRUCTION DOCUMENTS.
3. COORDINATE WITH OTHER DRAWINGS FOR NEW WORK.
4. COORDINATE EXTENT OF DEMOLITION WORK WITH CONTRACT DRAWINGS SHOWING WORK.
5. DRAWINGS DO NOT SHOW THE EXTENT OF ALL EXISTING EQUIPMENT MOUNTED ON EXISTING SUBSTRATE. CONTRACTOR SHALL VERIFY THE EXTENT AND LOCATIONS OF ALL SUCH ITEMS AND COORDINATE WITH OTHER DRAWINGS
6. COORDINATE DEMOLITION WITH ALL DRAWINGS AND WITH ANY PHASING DESCRIBED IN DRAWINGS AND SPECIFICATIONS.

ASBESTOS NOTE:

1. SAMPLING INDICATED PRESENCE OF ASBESTOS CONTAINING MATERIALS (ACM). ACM SHALL BE ABATED AND REMOVED AS REQUIRED BY FEDERAL, STATE AND LOCAL REGULATIONS. SEE SPECIFICATION SECTION 13281 FOR ADDITIONAL REQUIREMENTS.

LEAD NOTE:

1. SAMPLING INDICATED PRESENCE OF LEAD BASED PAINT CONTAMINATED/ COATED MATERIALS (LBP). LBP SHALL BE ABATED AND REMOVED AS REQUIRED BY FEDERAL, STATE AND LOCAL REGULATIONS. SEE SPECIFICATION SECTION 13281 FOR ADDITIONAL REQUIREMENTS.

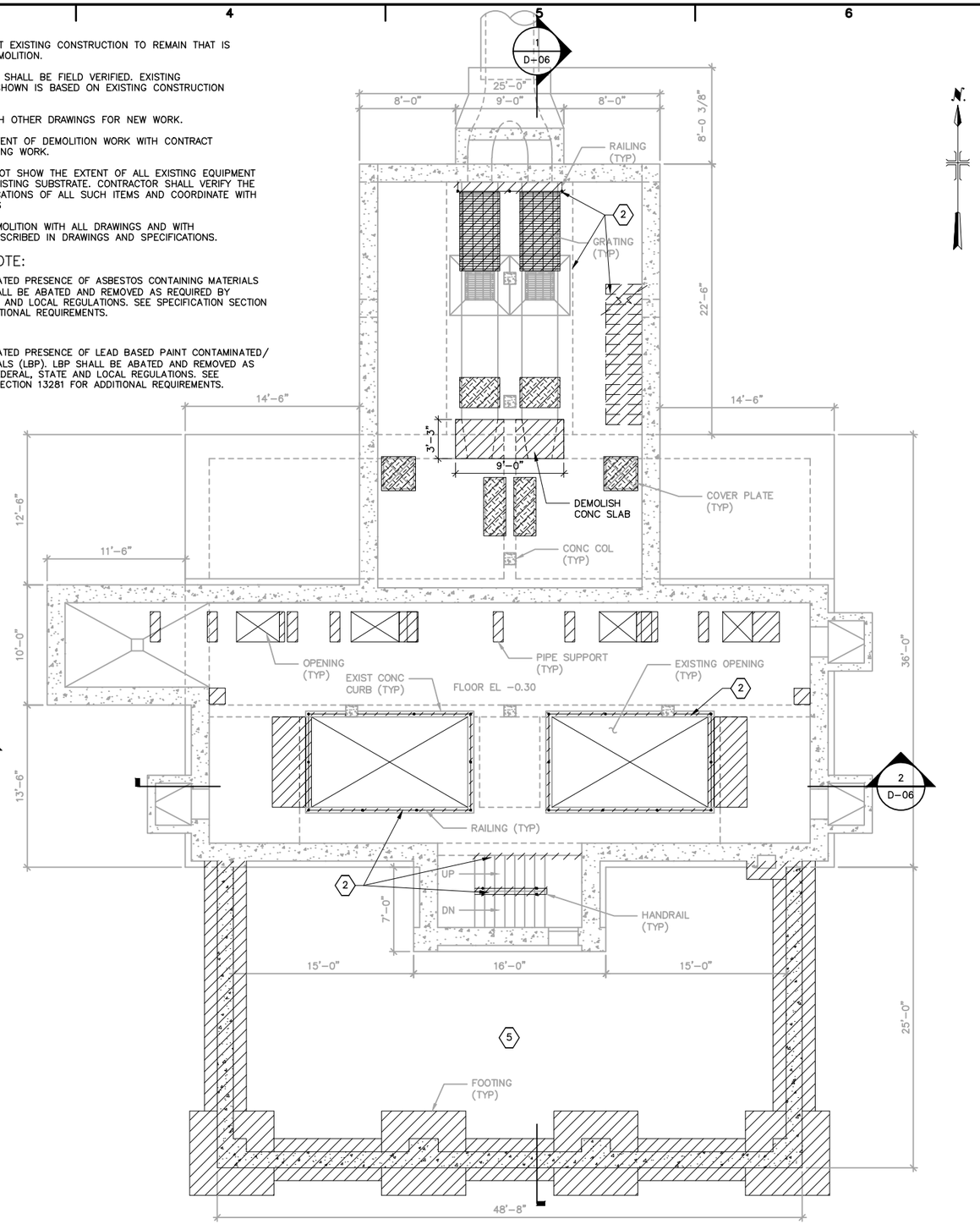

INTERMEDIATE PLAN AT EL -0.30

SCALE: 3/16" = 1'-0"

0 4' 8' 12'

KEY NOTES (X):

1. REMOVE ALL PAINT ON WALLS AND FLOOR. LEAD PRESENT IN PAINT (REFER TO LEAD NOTE 1), TYP.
2. REMOVE RAILING AND ALL BRACKETS, MOUNTS, APPURTENANCES, ETC, TYP.
3. REMOVE WINDOWS AND MASONRY WALLS, TYP.
4. REMOVE ENTIRETY OF BUILDING SUPERSTRUCTURE, TYP.
5. DEMOLISH FLOOR SLAB IN PORTIONS AS SHOWN IN PLAN AND IN SECTION 1 ON SHEET D-06. FOLLOW SUGGESTED SEQUENCE FOR DEMOLITION ON SHEET D-06.

Hazen ARCADIS
A JOINT VENTURE

LEGAL ENTITY:
ARCADIS CE, INC.

SEALS

STATE OF NEW YORK
MARINAL VERMA
LICENSED PROFESSIONAL ENGINEER

NASSAU COUNTY, NEW YORK
DEPARTMENT OF PUBLIC WORKS

LONG BEACH WPCP CONSOLIDATION PUMP STATION CONVERSION

LONG BEACH WASTEWATER POLLUTION CONTROL PLANT

NO.	DATE	ISSUED FOR	BY

COPYRIGHT: 2017 HAZEN AND SAWYER/ ARCADIS A JOINT VENTURE

DATE: JULY 2020
PROJECT NO.: 00726790.0001
FILE NAME: D-04
DESIGNED BY: M. ESTRADA
DRAWN BY: Z. SANGALANG
CHECKED BY: M. VERMA

SHEET TITLE

DEMOLITION

EXISTING AND DEMOLITION PLANS (STRUCTURAL)

SCALE: AS NOTED

D-04

SHEET 15 OF 112

User:SANGALANG Spec:AUS-NCSMOD File:I:\ACAD\PROJ\00726790.0001\SHEETS\D-04.DWG Scale:1:1 SavedDate:6/29/2020 Time:14:45 Plot Date: Sangalang, Zesimo; 7/17/2020; 16:43 ; Layout:LAYOUT1

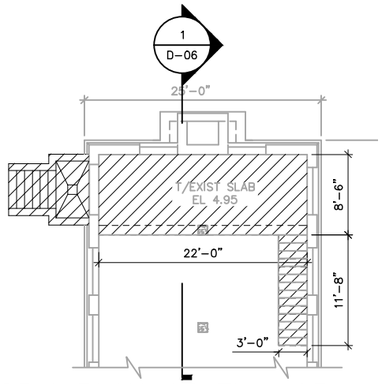

PLATFORM PLAN AT EL 4.95

SCALE: 1/8" = 1'-0"

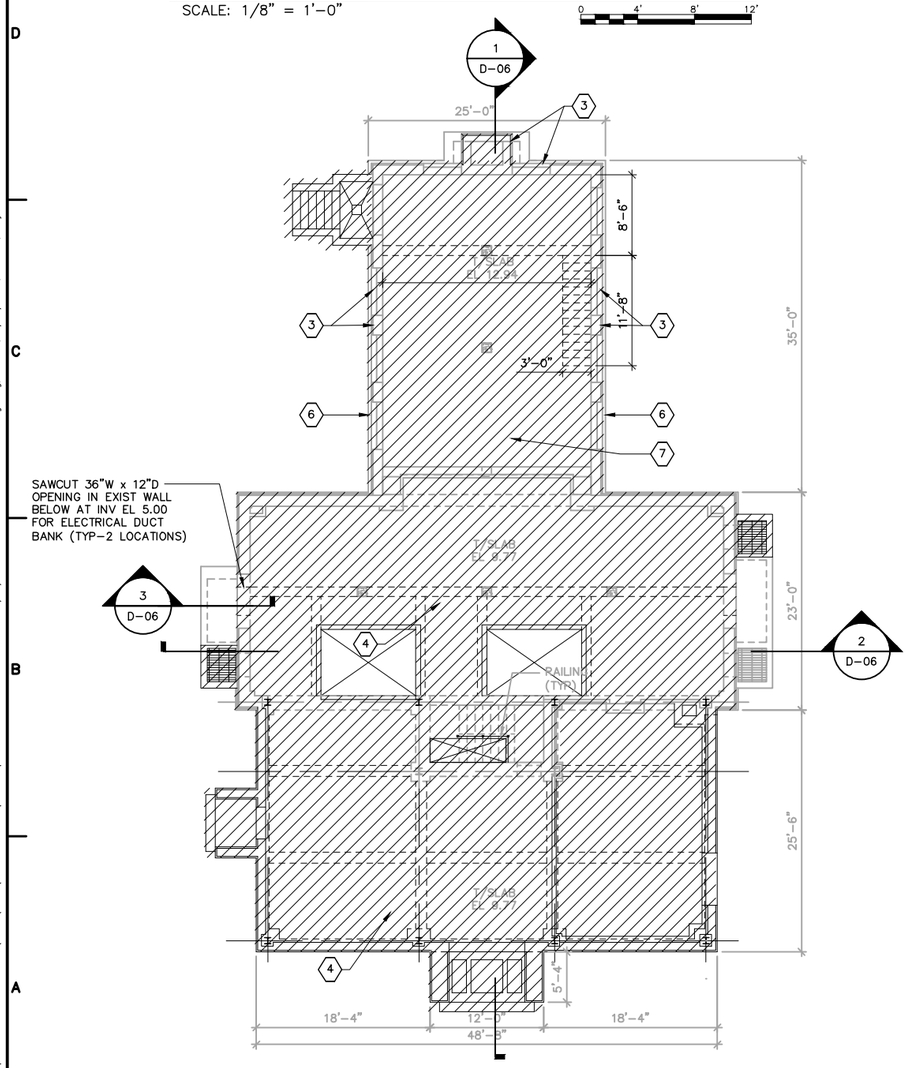

OPERATING FLOOR PLAN AT EL 9.77

SCALE: 1/8" = 1'-0"

NOTES:

1. REPAIR ADJACENT EXISTING CONSTRUCTION TO REMAIN THAT IS DAMAGED BY DEMOLITION.
2. ALL DIMENSIONS SHALL BE FIELD VERIFIED. EXISTING CONSTRUCTION SHOWN IS BASED ON EXISTING CONSTRUCTION DOCUMENTS.
3. COORDINATE WITH OTHER DRAWINGS FOR NEW WORK.
4. COORDINATE EXTENT OF DEMOLITION WORK WITH CONTRACT DRAWINGS SHOWING WORK.
5. DRAWINGS DO NOT SHOW THE EXTENT OF ALL EXISTING EQUIPMENT MOUNTED ON EXISTING SUBSTRATE. CONTRACTOR SHALL VERIFY THE EXTENT AND LOCATIONS OF ALL SUCH ITEMS AND COORDINATE WITH OTHER DRAWINGS
6. COORDINATE DEMOLITION WITH ALL DRAWINGS AND WITH ANY PHASING DESCRIBED IN DRAWINGS AND SPECIFICATIONS.

ASBESTOS NOTE:

1. SAMPLING INDICATED PRESENCE OF ASBESTOS CONTAINING MATERIALS (ACM). ACM SHALL BE ABATED AND REMOVED AS REQUIRED BY FEDERAL, STATE AND LOCAL REGULATIONS. SEE SPECIFICATION SECTION 13281 FOR ADDITIONAL REQUIREMENTS.

LEAD NOTE:

1. SAMPLING INDICATED PRESENCE OF LEAD BASED PAINT CONTAMINATED/ COATED MATERIALS (LBP). LBP SHALL BE ABATED AND REMOVED AS REQUIRED BY FEDERAL, STATE AND LOCAL REGULATIONS. SEE SPECIFICATION SECTION 13283 FOR ADDITIONAL REQUIREMENTS.

KEY NOTES (X):

1. REMOVE ALL PAINT ON WALLS AND FLOOR. LEAD PRESENT IN PAINT (REFER TO LEAD NOTE 1). TYP. CONTRACTOR SHALL PROVIDE SHORING FOR THE EXISTING 35 FEET LONG EAST AND THE WEST CONCRETE WALLS OF THE SUBSTRUCTURE (BENEATH THE WINDOWS AND MASONRY) AFTER THE ROOF HAS BEEN DEMOLISHED. THE SHORING SHALL REMAIN UNTIL THE NEW ROOF HAS BEEN POURED AND CONCRETE HAS GAINED DESIGN STRENGTH.
2. REMOVE RAILING AND ALL BRACKETS, MOUNTS, APPURTANENCES, ETC, TYP.
3. REMOVE WINDOWS AND MASONRY WALLS, TYP.
4. REMOVE ENTIRETY OF BUILDING SUPERSTRUCTURE, TYP.
5. CONTRACTOR TO DEMOLISH EXISTING ROOF DRAIN & ASSOCIATED PIPING & FITTINGS DN TO EXISTING HORIZONTAL MAIN EXITING THE BUILDING & CAP.
6. CONTRACTOR SHALL TEMPORARILY BRACE THE EXISTING 35 FEET LONG EAST AND WEST CONCRETE WALLS OF THE SUBSTRUCTURE (BENEATH THE WINDOWS AND MASONRY) HORIZONTALLY AND VERTICALLY AGAINST LATERAL EARTH PRESSURE FROM SOIL OUTSIDE THE WALLS. ASSUME SOIL TO BE AT THE SAME ELEVATION AS TOP OF THE CONCRETE WALLS. CONTRACTOR SHALL BRACE THE WALLS PRIOR TO DEMOLISHING THE ROOF. BRACING SHALL REMAIN IN PLACE UNTIL THE ROOF HAS BEEN POURED AND ROOF CONCRETE HAS REACHED THE DESIGN STRENGTH. CONTRACTOR SHALL PROVIDE SIGNED AND SEALED CALCULATIONS FOR THE TEMPORARY BRACING BY A REGISTERED P.E. IN THE STATE OF NEW YORK.
7. CONTRACTOR SHALL SUBMIT A DETAILED DESCRIPTION OF METHODS AND EQUIPMENT AND SEQUENCE FOR DEMOLITION FOR ENGINEER'S REVIEW PER SPECIFICATION 02050. CONTRACTOR SHALL PROVIDE NECESSARY WEATHER PROTECTION OF INTERIOR PREMISES AFTER ROOF HAS BEEN DEMOLISHED PER SPECIFICATIONS 02050 AND 01560.

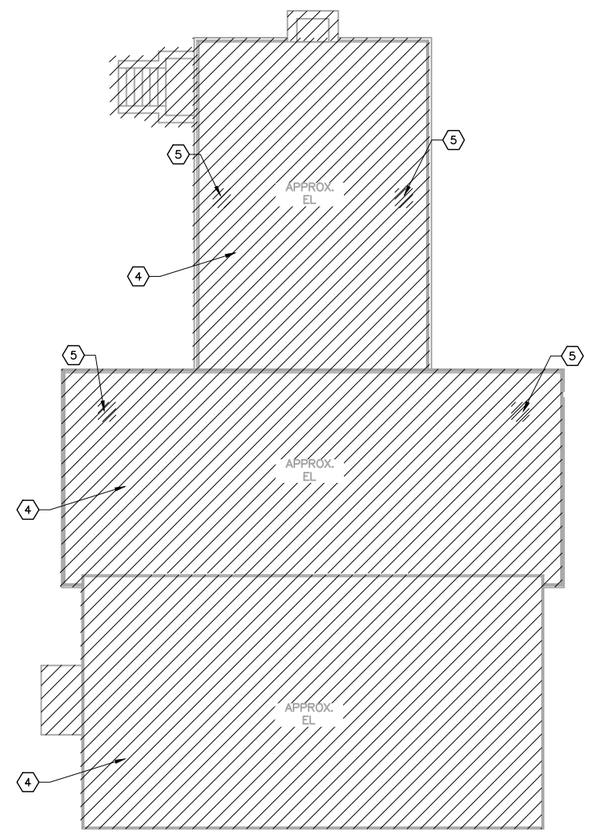

ROOF PLAN

SCALE: 1/8" = 1'-0"

Hazen ARCADIS
A JOINT VENTURE

LEGAL ENTITY:
ARCADIS CE, INC.

SEALS

STATE OF NEW YORK
MANAL VERMA
LICENSED PROFESSIONAL ENGINEER

NASSAU COUNTY, NEW YORK
DEPARTMENT OF PUBLIC WORKS

LONG BEACH WPCP CONSOLIDATION PUMP STATION CONVERSION

LONG BEACH WASTEWATER POLLUTION CONTROL PLANT

NO.	DATE	ISSUED FOR	BY

COPYRIGHT: 2017 HAZEN AND SAWYER/ ARCADIS A JOINT VENTURE

DATE: JULY 2020
PROJECT NO.: 00726790.0001
FILE NAME: D-05
DESIGNED BY: M. ESTRADA
DRAWN BY: Z. SANGALANG
CHECKED BY: M. VERMA

SHEET TITLE

DEMOLITION

EXISTING AND DEMOLITION OPERATING FLOOR PLAN AND ROOF PLAN (STRUCTURAL)

SCALE: AS NOTED

D-05

SHEET 16 OF 112

User:SANGALANG Spec:AUS-NCSMOD File:I:\ACAD\PROJ\00726790.0001\SHEETS\D-05.DWG Scale:1:1 SavedDate:7/17/2020 Time:16:31 Plot Date: Sangalang, Zosimo; 7/17/2020; 16:42 ; Layout:LAYOUT1

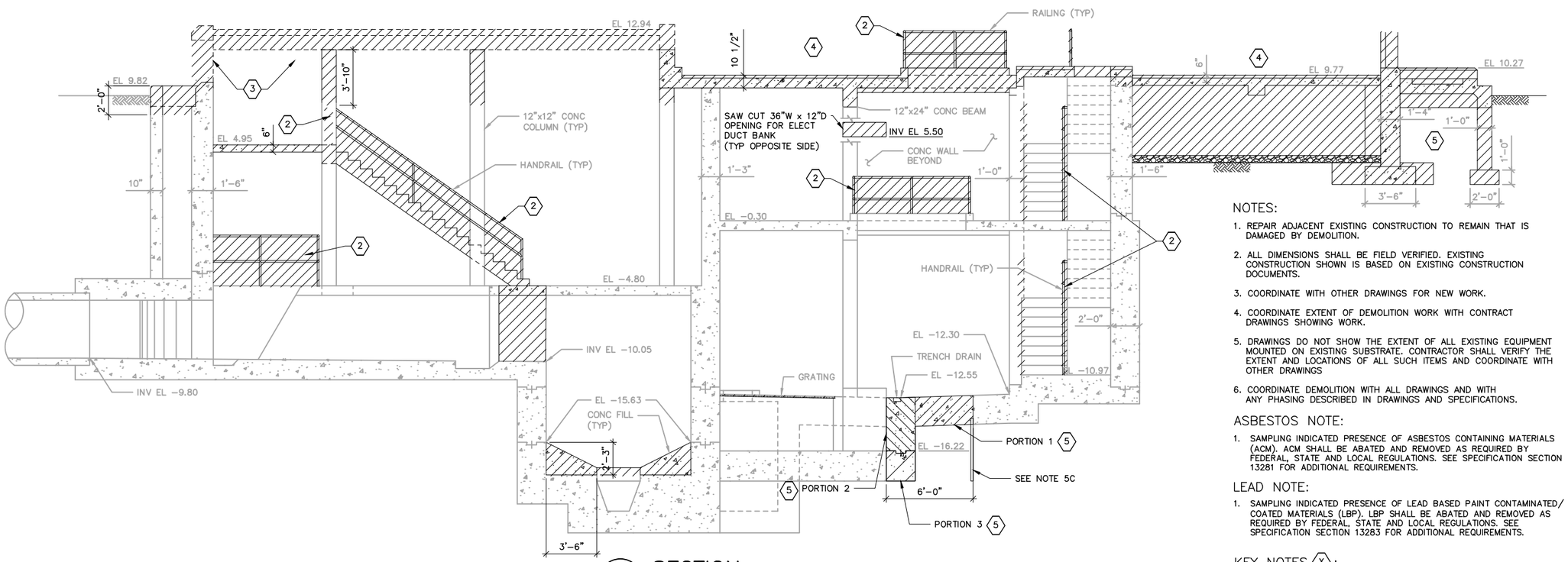

1 / D-04 SECTION
1/4" = 1'-0"

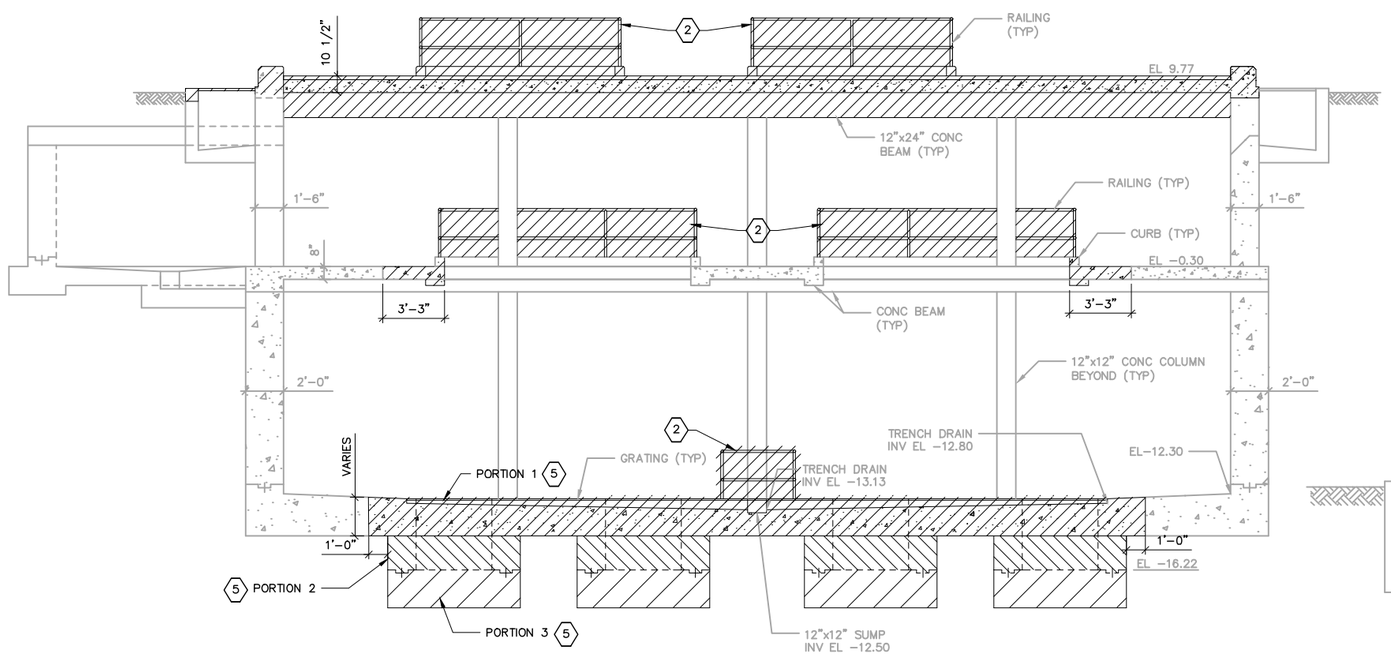

2 / D-04 SECTION
1/4" = 1'-0"

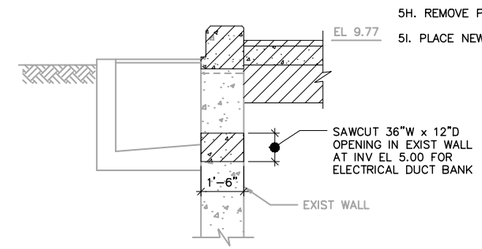

3 / D-04 SECTION
3/8" = 1'-0"

NOTES:

1. REPAIR ADJACENT EXISTING CONSTRUCTION TO REMAIN THAT IS DAMAGED BY DEMOLITION.
2. ALL DIMENSIONS SHALL BE FIELD VERIFIED. EXISTING CONSTRUCTION SHOWN IS BASED ON EXISTING CONSTRUCTION DOCUMENTS.
3. COORDINATE WITH OTHER DRAWINGS FOR NEW WORK.
4. COORDINATE EXTENT OF DEMOLITION WORK WITH CONTRACT DRAWINGS SHOWING WORK.
5. DRAWINGS DO NOT SHOW THE EXTENT OF ALL EXISTING EQUIPMENT MOUNTED ON EXISTING SUBSTRATE. CONTRACTOR SHALL VERIFY THE EXTENT AND LOCATIONS OF ALL SUCH ITEMS AND COORDINATE WITH OTHER DRAWINGS
6. COORDINATE DEMOLITION WITH ALL DRAWINGS AND WITH ANY PHASING DESCRIBED IN DRAWINGS AND SPECIFICATIONS.

ASBESTOS NOTE:

1. SAMPLING INDICATED PRESENCE OF ASBESTOS CONTAINING MATERIALS (ACM). ACM SHALL BE ABATED AND REMOVED AS REQUIRED BY FEDERAL, STATE AND LOCAL REGULATIONS. SEE SPECIFICATION SECTION 13281 FOR ADDITIONAL REQUIREMENTS.

LEAD NOTE:

1. SAMPLING INDICATED PRESENCE OF LEAD BASED PAINT CONTAMINATED/ COATED MATERIALS (LBP). LBP SHALL BE ABATED AND REMOVED AS REQUIRED BY FEDERAL, STATE AND LOCAL REGULATIONS. SEE SPECIFICATION SECTION 13283 FOR ADDITIONAL REQUIREMENTS.

KEY NOTES (X):

1. REMOVE ALL PAINT ON WALLS AND FLOOR. LEAD PRESENT IN PAINT (REFER TO LEAD NOTE 1), TYP.
2. REMOVE RAILING AND ALL BRACKETS, MOUNTS, APPURTANENCES, ETC, TYP.
3. REMOVE WINDOWS AND MASONRY WALLS, TYP.
4. REMOVE ENTIRETY OF BUILDING SUPERSTRUCTURE, TYP.
5. DEMOLITION SHOWN ON SHEET D-06 CAN ONLY OCCUR AFTER DEWATERING HAS BEEN COMPLETED. FOLLOWING IS A RECOMMENDED SEQUENCE:

5A. GROUNDWATER SHALL MAINTAINED AT LEAST 2 FEET BELOW THE ELEVATION OF THE LOWEST SUBGRADE EXCAVATION UNTIL THE NEWLY POURED CONCRETE REACHES DESIGN STRENGTH. SEE GEOTECHNICAL REPORT DEWATERING INFORMATION. CONTRACTOR SHALL SUBMIT A SIGNED AND SEALED DEWATERING PLAN DEVELOPED BY A REGISTERED P.E. IN NEW YORK FOR REVIEW AND APPROVAL.

5B. PORTION 1 CONCRETE ON SHEET D-06 SHALL BE SAW CUT FIRST AND REMOVED.

5C. AFTER REMOVAL OF PORTION 1, INSTALL LAGGING OR SIMILAR SYSTEM WITH VERTICAL SUPPORTS AS REQUIRED ON THE SOUTH SIDE OF THE SAW CUT.

5D. THE SOIL SUPPORT SYSTEM WILL REMAIN IN PLACE. TOP OF SUPPORT SUPPORT SYSTEM SHOULD NOT EXTEND ABOVE BOTTOM OF THE SLAB AT EL. -12.30.

5E. EXCAVATION RATE AND LAGGING PLACEMENT SHALL PROCEED AT A SIMILAR PACE TO KEEP EXISTING SUBGRADE INTACT UNDER THE REMAINING EXISTING STRUCTURE SOUTH OF THE EXCAVATION AND AVOID UNDERMINING.

5F. EXCAVATION SHOULD NOT EXTEND BEYOND THE BOTTOM OF EXISTING SLAB AT EL. - 16.22.

5G. REMOVE PORTION 2 CONCRETE WITH A SMALL ELECTRIC HAMMER CHISEL.

5H. REMOVE PORTION 3 BY SAW CUTTING.

5I. PLACE NEW CONCRETE.

Hazen ARCADIS
A JOINT VENTURE

LEGAL ENTITY:
ARCADIS CE, INC.

SEALS

STATE OF NEW YORK · MANIAL VERMA · 073718 · LICENSED PROFESSIONAL ENGINEER

NASSAU COUNTY, NEW YORK
DEPARTMENT OF PUBLIC WORKS

LONG BEACH WPCP CONSOLIDATION PUMP STATION CONVERSION

LONG BEACH WASTEWATER POLLUTION CONTROL PLANT

NO.	DATE	ISSUED FOR	BY

COPYRIGHT: 2017 HAZEN AND SAWYER/ ARCADIS A JOINT VENTURE

DATE:	JULY 2020
PROJECT NO.:	00726790.0001
FILE NAME:	D-06
DESIGNED BY:	M. ESTRADA
DRAWN BY:	Z. SANGALANG
CHECKED BY:	M. VERMA

SHEET TITLE

DEMOLITION

EXISTING AND DEMOLITION SECTIONS (STRUCTURAL)

SCALE: AS NOTED

D-06

SHEET 17 OF 112

User: SANGALANG Spec: AUS-NCSMOD File1: \ACAD\PROJ\00726790.0001\SHEETS\D-06.DWG Scale:1:1 SavedDate:7/17/2020 Time:16:57 Plot Date: Sangalang, Zosimo; 7/20/2020; 09:26 ; Layout:LAYOUT1

4 D-02 BAR SCREEN DETAIL 1
SCALE: NOT TO SCALE

5 D-02 BAR SCREEN DETAIL 2
SCALE: NOT TO SCALE

6 D-02 TRASH CHUTE AND SLIDE GATE DETAIL 1
SCALE: NOT TO SCALE

7 D-02 TRASH CHUTE AND SLIDE GATE DETAIL 2
SCALE: NOT TO SCALE

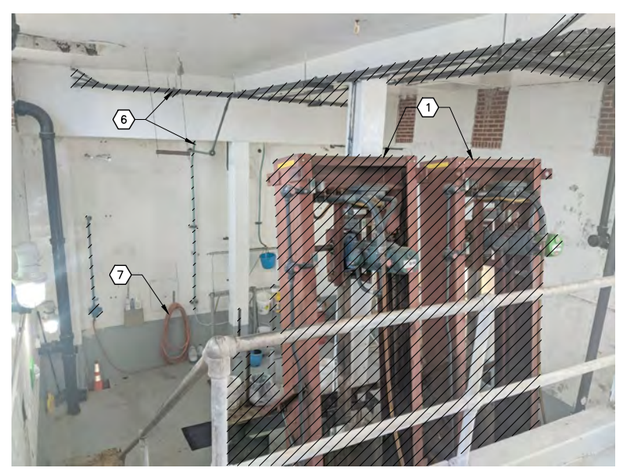

8 D-02 INFLUENT CHAMBER TOP VIEW
SCALE: NOT TO SCALE

DEMOLITION KEY NOTES:

1. BAR SCREEN
2. BAR SCREEN FRAMING
3. SLIDE GATE
4. TRASH CHUTE
5. WOODEN TABLE
6. ELECTRICAL CONDUITS AND ACCESSORIES
7. RE-USE EXISTING HOSE

Hazen ARCADIS
A JOINT VENTURE

LEGAL ENTITY:
ARCADIS CE, INC.

SEALS

STATE OF NEW YORK
NANGSTON S. JOAFS
No. 093357
LICENSED PROFESSIONAL ENGINEER
7/20

NASSAU COUNTY, NEW YORK
DEPARTMENT OF PUBLIC WORKS

LONG BEACH WPCP CONSOLIDATION PUMP STATION CONVERSION

LONG BEACH WASTEWATER POLLUTION CONTROL PLANT

NO.	DATE	ISSUED FOR	BY

COPYRIGHT: 2017 HAZEN AND SAWYER/ ARCADIS A JOINT VENTURE

DATE: JULY 2020
PROJECT NO.: 00726790.0001
FILE NAME: D-07
DESIGNED BY: L. JONES
DRAWN BY: J. MA
CHECKED BY: L. JONES

SHEET TITLE

DEMOLITION

EXISTING AND DEMOLITION DETAILS – SHEET 1

SCALE: NOT TO SCALE

D-07

SHEET 18 OF 112

User:SWOHLFAHRT Spec:AUS-NCSMOD File:\\WY03FP01\DATA\WHI_CAD\VOL2\ACAD\PROJ\00726790.0001\SHEETS\D-07.DWG Scale:1:1 SavedDate:6/30/2020 Time:12:36 Plot Date: Wohlfahrt, Sarah; 7/20/2020; 15:14 ; Layout:LAYOUT1

NOTES:

1. REPAIR ADJACENT EXISTING CONSTRUCTION TO REMAIN THAT IS DAMAGED BY DEMOLITION.
2. ALL DIMENSIONS SHALL BE FIELD VERIFIED. EXISTING CONSTRUCTION SHOWN IS BASED ON EXISTING CONSTRUCTION DOCUMENTS.
3. COORDINATE WITH OTHER DRAWINGS FOR NEW WORK.
4. COORDINATE EXTENT OF DEMOLITION WORK WITH CONTRACT DRAWINGS SHOWING WORK.
5. DRAWINGS DO NOT SHOW THE EXTENT OF ALL EXISTING EQUIPMENT MOUNTED ON EXISTING SUBSTRATE. CONTRACTOR SHALL VERIFY THE EXTENT AND LOCATIONS OF ALL SUCH ITEMS AND COORDINATE WITH OTHER DRAWINGS
6. COORDINATE DEMOLITION WITH ALL DRAWINGS AND WITH ANY PHASING DESCRIBED IN DRAWINGS AND SPECIFICATIONS.

ASBESTOS NOTE:

1. SAMPLING INDICATED PRESENCE OF ASBESTOS CONTAINING MATERIALS (ACM). ACM SHALL BE ABATED AND REMOVED AS REQUIRED BY FEDERAL, STATE AND LOCAL REGULATIONS. SEE SPECIFICATION SECTION 13281 FOR ADDITIONAL REQUIREMENTS.

LEAD NOTE:

1. SAMPLING INDICATED PRESENCE OF LEAD BASED PAINT CONTAMINATED/ COATED MATERIALS (LBP). LBP SHALL BE ABATED AND REMOVED AS REQUIRED BY FEDERAL, STATE AND LOCAL REGULATIONS. SEE SPECIFICATION SECTION 13283 FOR ADDITIONAL REQUIREMENTS.

DEMOLITION STAGING NOTES:

1. DEMOLITION OF THE SUPERSTRUCTURE SHALL NOT OCCUR UNTIL THE ACCEPTANCE OF THE BYPASS PUMP STATION.

DEMOLITION KEY NOTES:

1. GENERATOR
2. TRANSFORMER
3. STORAGE SHED
4. PLANT SERVICE BUILDING
5. SCREEN HOUSE
6. PUMP STATION
7. BURIED DIESEL FUEL TANK

9 / C-04 EXTERIOR DETAIL 1
SCALE: NOT TO SCALE

10 / C-04 EXTERIOR DETAIL 2
SCALE: NOT TO SCALE

11 / C-04 EXTERIOR DETAIL 3
SCALE: NOT TO SCALE

12 / C-04 EXTERIOR DETAIL 4
SCALE: NOT TO SCALE

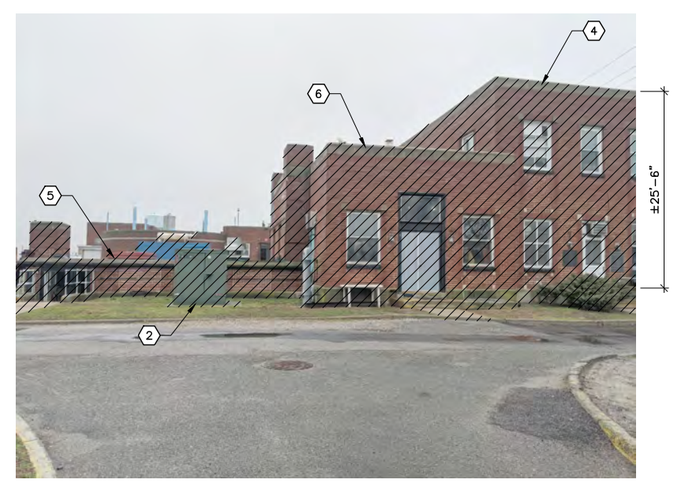

13 / C-04 EXTERIOR DETAIL 5
SCALE: NOT TO SCALE

Hazen ARCADIS
A JOINT VENTURE

LEGAL ENTITY:
ARCADIS CE, INC.

SEALS

STATE OF NEW YORK
HANGSTON S. JOATS
No. 093357
LICENSED PROFESSIONAL ENGINEER
7/20

NASSAU COUNTY, NEW YORK
DEPARTMENT OF PUBLIC WORKS

LONG BEACH WPCP CONSOLIDATION
PUMP STATION CONVERSION

LONG BEACH WASTEWATER POLLUTION CONTROL PLANT

NO.	DATE	ISSUED FOR	BY

COPYRIGHT: 2017 HAZEN AND SAWYER/ ARCADIS A JOINT VENTURE

DATE: JULY 2020
PROJECT NO.: 00726790.0001
FILE NAME: D-08
DESIGNED BY: L. JONES
DRAWN BY: J. MA
CHECKED BY: L. JONES

SHEET TITLE

DEMOLITION

EXISTING AND DEMOLITION DETAILS – SHEET 2

SCALE: NOT TO SCALE

D-08

SHEET 19 OF 112

User: SWOHLFAHRT Spec: AUS-NCSMOD File: \\NY03FP01\DATA\WHL_CAD\VOL2\ACAD\PROJ\00726790.0001\SHEETS\D-08.DWG Scale:1:1 SavedDate:6/30/2020 Time:12:38 Plot Date: Wohlfahrt, Sarah; 7/20/2020; 15:19 ; Layout:LAYOUT1

ABBREVIATIONS

GENERAL

AFF	ABOVE FINISHED FLOOR
ARCH	ARCHITECTURAL
B	BORING
BC	BOTTOM OF CONCRETE
B, BOT	BOTTOM
BFE	BASE FLOOD ELEVATION
BP	BOTTOM OF PIPE
BM	BENCH MARK
B.C.	BACK CURB
BRG	BEARING
CB	CATCH BASIN
CJ	CONSTRUCTION JOINT
CL	CENTERLINE
CO	CLEANOUT
CONC	CONCRETE
CONN	CONNECTION
CONT	CONTINUOUS, CONTINUATION
CONT'D	CONTINUED
CTR	CENTER
DEPRESS	DEPRESSION
DET	DETAIL
DMH	DRAIN MANHOLE
DIA, ø	DIAMETER
DIM(S)	DIMENSION(S)
DWG(S)	DRAWING(S)
D/S	DOWNSTREAM
DWG(S)	DRAWING(S)
E	ELECTRICAL CONDUIT
EA	EACH
EC	ELECTRICAL CONTRACTOR
EHH	ELECTRICAL HAND HOLE
EL/ELEV	ELEVATION
EMH	ELECTRICAL MANHOLE
EQ	EQUAL
ETC	ET CETERA
EXP	EXPANSION
EXP JT	EXPANSION JOINT
EXT	EXTERIOR
F.C.	FRONT OF CURB
FD	FLOOR DRAIN
FF/FIN FL	FINISHED FLOOR
FG	FINISHED GRADE
FM	FORCE MAIN
FOB	FLAT ON BOTTOM
GA	GAUGE
GALV	GALVANIZED
GRTG	GRATING
GS	GAS SERVICE
HH	HAND HOLE
HYD	HYDRANT
ID	INSIDE DIAMETER
IN	INCH
INV./IE	INVERT ELEVATION
JT	JOINT
LBS	POUNDS
LF	LINEAR FEET
LG	LONG
LLV	LONG LEG VERTICAL
LP	LOW POINT
MAINT.	MAINTENANCE
MAX	MAXIMUM
MCC	MOTOR CONTROL CENTER
MECH	MECHANICAL
MH	MANHOLE
MIN	MINIMUM
NA	NOT APPLICABLE
NCS	NASSAU COUNTY SANITARY SEWER
NO./ #	NUMBER
NTS	NOT TO SCALE
OF	OVERFLOW
OH	OVERHEAD ELECTRIC
PI	PRESSURE INDICATOR
PSF	POUNDS PER SQUARE FOOT
REF	REFERENCE
REQD	REQUIRED
ROW	RIGHT OF WAY
SECT	SECTION
SPECS	SPECIFICATIONS
SQ	SQUARE
SQ FT	SQUARE FOOT
STD	STANDARD
STM	STORM
STP	SEWAGE TREATMENT PLANT
STRU	STRUCTURAL
SYM	SYMMETRICAL
T	TOP/TELEPHONE
TC	TOP OF CONCRETE
TF	TOP OF FRAME
TP	TOP OF PIPE
(TYP)	TYPICAL
UGC	UNDERGROUND COMMUNICATION
UGE	UNDERGROUND ELECTRIC
W	WATER
W/	WITH
WM	WATER MAIN
WS	WATER STOP OR WATER SERVICE
WV	WATER VALVE
YR	YEAR

VALVES, FITTINGS, ETC.

ARV	AIR RELIEF VALVE
ARVT	AIR RELEASE VALVE VAULT
BFP	BACKFLOW PREVENTER
BF	BLIND FLANGE
BFV	BUTTERFLY VALVE
BV	BALL VALVE
CAV	COMBINATION AIR VALVE
CV	CHECK VALVE
CPLG	COUPLING
EP	ECCENTRIC PLUG VALVE
EXP JT	EXPANSION JOINT
FLEX	FLEXIBLE
FLG	FLANGE
FM	FLOW METER
FTG	FITTING
FV	FLAP VALVE
GB	GLOBE VALVE
GV	GATE VALVE
HB	HOSE BIBB
HBVB	HOSE BIBB WITH VACUUM BREAKER
KGV	KNIFE GATE VALVE
MFM	MAGNETIC FLOWMETER
MJ	MECHANICAL JOINT
MOV	MOTOR OPERATED VALVE
NPT	NATIONAL PIPE THREAD
PE	PLAIN END
PV	PLUG VALVE
PRV	PRESSURE RELIEF VALVE
RED	REDUCER
RPZ	REDUCED PRESSURE ZONE ASSEMBLY
SAV	SURGE ANTICIPATOR VALVE
SOV	SOLENOID OPERATED VALVE
TCV	TEMPERATURE CONTROL VALVE
THD	THREADED

PIPING MATERIALS

CI	CAST IRON PIPE
CMP	CORRUGATED METAL PIPE
CPP	CORRUGATED PLASTIC PIPE
CU	COPPER PIPE
DI	DUCTILE IRON PIPE
ERCP	ELLIPTICAL REINFORCED CONCRETE PIPE
FRP	FIBERGLASS REINFORCED PIPE
GSP	GALVANIZED STEEL PIPE
HDPE	HIGH DENSITY POLYETHYLENE
PE LINING	POLYETHYLENE LINING
RCP	REINFORCED CONCRETE PIPE
SSP	STAINLESS STEEL PIPE
IPS	IRON PIPE SIZE
PVC	POLYVINYLCHLORIDE
PCCP	PRESTRESSED CONCRETE CYLINDER PIPE
VCP	VITRIFIED CLAY PIPE

PROCESS PIPING

AF	ANTIFOAM SOLUTION
CEN	CENTRATE
CHWR	CHILLED WATER RETURN
CHWS	CHILLED WATER SUPPLY
CW	CITY WATER
DG	DIGESTER GAS
DR	DRAIN
DS	DIGESTED SLUDGE
DW	DECANT WASTE
EW	EFFLUENT WATER
FBWS	FLUIDIZED BED WASTE SLUDGE
FPW	FIRE PROTECTION WATER
FTE	FILTRATE THICKENER EFFLUENT
FTS	FINAL TANK SCUM
FW	FILTRATE/WASHWATER
G	GAS MAIN
GRIT	GRIT
H202	HYDROGEN PEROXIDE
HWR	HOT WATER RETURN
HWS	HOT WATER SERVICE
MNS	MICRO NUTRIENT SOLUTION
NaOH	SODIUM HYDROXIDE
NP	NON-POTABLE WATER
OC	ODOR CONTROL DUCT
OF	OVERFLOW
PA	PROCESS AIR
PDR	PUMP DRAIN
PE	PRIMARY EFFLUENT
POLY	POLYMER
PW	POTABLE WATER
RD	ROOF DRAIN
RF	REACTOR FEED
S	SEWER
SA	SERVICE AIR
SAN	SANITARY SEWER
SBS	SODIUM BISULFITE SOLUTION
SFM	SANITARY FORCE MAIN
SL	SLUDGE
SLW	SEAL WATER
SPW	SUMP PUMP DISCHARGE
SW	SERVICE WATER
UNK	UNKNOWN
VDR	VENT DRAIN
WAS	WASTE ACTIVATED SLUDGE

LEGEND

EXISTING	NEW	
		ABANDONED IN PLACE
		ASPHALT PAVEMENT
		BUILDING/STRUCTURE
		CONCRETE PAD/PAVING
		ELECTRICAL DUCT BANK
		CONCRETE PAVERS
		GRAVEL ROAD
		CONCRETE CURB AND GUTTER
		CONCRETE SIDEWALK
		CONSTRUCTION LIMITS
—x—x—x—	—x—x—x— (RESET/NEW)	FENCE
		FLOODPLAIN LINE
—PL—	—PL—	PROPERTY LINE
		SILT FENCE
—SL—		SITE LIGHTING CONDUIT
—UGE—		UNDERGROUND ELECTRIC CONDUIT
	—OHE—	TEMPOARY OVERHEAD ELECTRIC CABLES
		CONSTRUCTION LIMITS
		YARD PIPING
300	300	CONTOUR
	B-1	SOIL BORING
X10.00	X10.00	SPOT ELEVATION
	1	STAKING POINT
		APPROXIMATE WOODLINE
6"		SHRUB W/ DIAMETER
8"		TREE W/ TRUNK DIAMETER
		AIR VENT MANHOLE
D		DRAINAGE MANHOLE
S	S	SANITARY MANHOLE
E	E	ELECTRICAL MANHOLE
	C	ELECTRICAL HAND HOLE
	L	LIGHTING HAND HOLE
T	T	TELEPHONE MANHOLE
		UNKNOWN MANHOLE
		CATCH BASIN
		DRAINAGE INLET
		DIGESTER GAS VALVE
		GAS VALVE
		HYDRANT SHUTOFF VALVE
		WATER MAIN VALVE
TRANS.		ELECTRICAL TRANSFORMER
E		ELECTRICAL VAULT
		FIRE HYDRANT/ WALL HYDRANT
SL		SITE LIGHTING HAND HOLE
		LIGHT POLE
—ST—	—STM—	STORM DRAINAGE PIPE
		RELOCATED LIGHT POLE
		TEMPORARY UTILITY POLE
		WOODEN UTILITY POLE
		STAIRWELL W/ LANDING

GENERAL NOTES

1. RECORD DRAWINGS USED FOR EXISTING FEATURES:

1.1. CITY OF LONG BEACH SEWAGE TREATMENT PLANT AND INTERCEPTING SEWER PROJECT. SEWAGE TREATMENT PLANT – CONSTRUCTION NO.1A GENERAL CONSTRUCTION –1951.

2. PRIMARY CONTROL POINTS COORDINATES ARE REFERENCED TO THE NEW YORK STATE PLANE COORDINATE SYSTEM LONG ISLAND ZONE, NAD 83. THE AVERAGE COMBINED SCALE FACTOR FOR THE PROJECT IS 0.99994695. THE TOPOGRAPHIC SURVEY WAS PREPARED ON THE GROUND UTILIZING THE PRIMARY CONTROL POINTS.

3. ELEVATIONS ARE REFERENCED TO THE NAVD 88 VERTICAL DATUM.

4. CONTRACTOR SHALL OBTAIN ALL THE NECESSARY PERMITS FROM THE APPROPRIATE AUTHORITIES, DEPARTMENTS, AND/OR AGENCIES HAVING JURISDICTION PRIOR TO COMMENCING WORK.

5. CONTRACTOR SHALL TAKE CARE TO AVOID DAMAGE TO EXISTING PAVEMENT, TREES, VEGETATION, STRUCTURES, AND UTILITIES THAT ARE NOT INDICATED TO BE DEMOLISHED, REMOVED OR RELOCATED. ANY DAMAGE TO EXISTING PAVEMENT, TREES, VEGETATION, STRUCTURES, AND UTILITIES NOT INDICATED TO BE DEMOLISHED, REMOVED OR RELOCATED SHALL BE REPAIRED, REPLACED OR RELOCATED AT THE CONTRACTOR'S EXPENSE.

6. UTILITIES HAVE BEEN PLOTTED FROM AVAILABLE SURVEY INFORMATION. CONTRACTOR SHALL VERIFY FIELD CONDITIONS BEFORE COMMENCEMENT OF ANY CONSTRUCTION ACTIVITIES. CONTRACTOR SHALL VERIFY EXISTING ELEVATIONS AND DIMENSIONS WHERE NEW WORK WILL MATCH EXISTING. DISCREPANCIES SHALL BE BROUGHT TO THE ATTENTION OF THE ENGINEER FOR RESOLUTION PRIOR TO THE COMMENCEMENT OF WORK. IT IS THE CONTRACTOR'S RESPONSIBILITY TO VERIFY THEIR EXACT LOCATION AND TO AVOID DAMAGE TO THEM. THE CONTRACTOR SHALL CONTACT DIG SAFELY NEW YORK AT PHONE NUMBER 1-800-272-4480 TO REQUEST UNDERGROUND UTILITY LOCATION MARK-OUT AT LEAST TWO (2) WORKING DAYS BUT NO MORE THAN TEN (10) WORKING DAYS PRIOR TO BEGINNING EXCAVATION, INCLUDING SOIL DRILLING. THE CONTRACTOR SHALL ALSO CONTACT AND REQUEST UTILITY LOCATION MARK-OUT FROM BURIED UTILITY OWNERS WITH UTILITIES ON THE PROJECT SITE THAT ARE NOT PARTICIPANTS OF DIG SAFELY NEW YORK.

7. WHERE PROPOSED WORK IS IN THE VICINITY OF UTILITY POLES, SUCH THAT SUPPORT OF THE POLE(S) WILL BE REQUIRED, THE CONTRACTOR SHALL BE RESPONSIBLE FOR NOTIFYING THE UTILITY OF THE WORK. IT WILL BE THE RESPONSIBILITY OF THE CONTRACTOR TO COORDINATE WITH THE UTILITY FOR SUPPORT OF THE POLE.

8. WHERE OVERHEAD POWER LINES ARE PRESENT, CONTRACTOR SHALL CONTACT THE UTILITY PRIOR TO CONSTRUCTION ACTIVITIES TO DETERMINE THE MINIMUM REQUIRED EQUIPMENT CLEARANCE (MEC) DISTANCE BASED UPON LINE STRENGTH.

9. DURING EXCAVATION AND PLACEMENT OF UTILITIES THE CONTRACTOR SHALL COMPLY WITH ALL APPLICABLE SAFETY REGULATIONS.

10. ALL MATERIALS, CONSTRUCTION METHODS, AND WORKMANSHIP SHALL CONFORM WITH THE CONSTRUCTION SPECIFICATIONS AND DRAWINGS. CONTRACTOR IS RESPONSIBLE FOR SUBMITTAL OF SHOP DRAWINGS FOR APPROVAL PRIOR TO INSTALLATION AND FURNISHING OF MATERIALS ASSOCIATED WITH SPECIFIED STANDARDS.

11. THE CONTRACTOR SHALL REMOVE AND DISPOSE OF ALL DEBRIS GENERATED DURING THE PROJECT OFF SITE AT A PROPERLY PERMITTED DISPOSAL FACILITY.

12. CONTRACTOR SHALL MAKE EVERY EFFORT TO SAVE AND MAINTAIN ALL PROPERTY IRONS, MONUMENTS, OTHER PERMANENT POINTS AND LINES OF REFERENCE AND CONSTRUCTION STAKES. A REGISTERED LAND SURVEYOR AT THE CONTRACTOR'S EXPENSE SHALL REPLACE OR RELOCATE PROPERTY IRONS, MONUMENTS, AND OTHER PERMANENT POINTS OF REFERENCE DESTROYED BY THE CONTRACTOR.

13. ALL DEMOLITION OF EXISTING UTILITIES SHALL BE DONE IN ACCORDANCE WITH SECTION 01700 – MAINTENANCE OF PLANT OPERATIONS.

14. CONTRACTOR SHALL SUPPORT EXISTING UTILITIES WITHIN EXCAVATION LIMITS SUCH THAT THE EXISTING UTILITIES CAN REMAIN IN SERVICE. CONTRACTOR SHALL HAND DIG AROUND EXISTING UTILITIES THAT ARE TO REMAIN IN SERVICE.

15. CONSTRUCTION LIMITS SHOWN ON DRAWINGS ALSO INDICATE LIMITS OF CLEARING AND GRUBBING. CLEARING AND GRUBBING SHALL BE IN ACCORDANCE WITH SECTION 02100 – CLEARING, GRUBBING AND SITE PREPARATION IN THE CONTRACT DOCUMENTS.

EROSION CONTROL PLAN AND CONSTRUCTION SEQUENCE

1. CONSTRUCTION ACTIVITY SHALL NOT COMMENCE UNTIL AUTHORIZATION TO DISCHARGE UNDER SPDES GENERAL PERMIT NO. GP-0-20-001 IS OBTAINED. STORMWATER DISCHARGE FROM CONSTRUCTION ACTIVITY IS AUTHORIZED TEN (10) BUSINESS DAYS FROM THE DATE THE NYSDEC RECEIVES BOTH A COMPLETE PAPER VERSION OF THE NOI AND A SIGNED MUNICIPAL SEPARATE STORM SEWER SYSTEM (MS4) SWPPP ACCEPTANCE FORM.

2. NO CONSTRUCTION OR LAND DISTURBANCE ACTIVITIES MAY BEGIN UNTIL ALL PERIMETER EROSION CONTROL MEASURES HAVE BEEN INSTALLED AS SHOWN ON THE CONTRACT DRAWINGS. MEASURES SHALL INCLUDE CONSTRUCTION FENCING, AND SILT FENCING. IF CLEARING IS REQUIRED FOR INSTALLATION OF A PARTICULAR MEASURE, ALL MEASURES NOT REQUIRING CLEARING SHALL BE INSTALLED FIRST. CLEARING OF THE NECESSARY LAND FOR INSTALLATION OF THE PARTICULAR MEASURE MAY THEN PROCEED.

3. STORM DRAINAGE INLETS AND OUTLETS SHALL BE PROTECTED WITH INLET PROTECTION AND OTHER APPROPRIATE EROSION CONTROL MEASURES UNTIL ENTIRE SITE HAS BEEN STABILIZED.

4. ONCE ALL MEASURES HAVE BEEN INSTALLED, CLEAR AND GRUB THE SITE WITHIN THE CONSTRUCTION LIMITS AS SHOWN ON THE CONTRACT DRAWINGS.

5. ONCE CLEARING AND GRUBBING IS COMPLETE, TOPSOIL SHALL BE STRIPPED AND STOCKPILED ONSITE AS CONDITIONS ALLOW.

6. EARTHWORK OPERATIONS CAN BEGIN ONCE TOPSOIL HAS BEEN REMOVED.

7. REMOVE THE EXISTING STRUCTURES AS SHOWN IN THE EXISTING AND DEMOLITION PLAN.

8. ALL EXCESS SOIL RESULTING FROM EARTHWORK OPERATIONS SHALL BE REMOVED FROM SITE. ANY ONSITE SOIL STOCKPILE AREAS SHALL BE PROTECTED WITH APPROPRIATE EROSION CONTROL MEASURES AND SEEDED WITH TEMPORARY SEEDING FOR THE DURATION OF CONSTRUCTION ACTIVITIES. ANY SOILS TAKEN OFFSITE SHALL BE STOCKPILED AT LOCATIONS WITH ALL REQUIRED PERMITS.

9. UPON COMPLETION OF THE NECESSARY EARTHWORK, PLACE TEMPORARY STABILIZATION GRAVEL, AND INSTALL TEMPORARY UTILITY LINES AND STRUCTURES. IN ACCORDANCE WITH CONTRACT DOCUMENTS, SUBBASE COARSE OF PAVEMENT SECTION MAY SERVE AS TEMPORARY STABILIZATION GRAVEL.

10. ALL DUCTBANKS AND PIPE WORK SHALL BE INSTALLED IN ACCORDANCE WITH STANDARD CONSTRUCTION TECHNIQUES. ONLY THE LENGTH OF TRENCH IN WHICH PIPE CAN BE INSTALLED IN ONE DAY'S TIME SHALL BE OPEN AT ANY TIME, WITH SPOIL MATERIAL PLACED ON THE UPHILL SIDE OF THE TRENCH. PIPING SHALL BE CAPPED AT THE END OF EACH DAYS WORK TO PREVENT SEDIMENT FROM ENTERING.

11. PROVIDE TEMPORARY SEEDING FOR ALL DISTURBED AREAS THROUGHOUT CONSTRUCTION ON ANY AREAS THAT REMAIN UNDISTURBED FOR MORE THAN 7 DAYS.

12. THE CONTRACTOR WILL BE RESPONSIBLE FOR OBTAINING ALL NECESSARY PERMITS FOR DEWATERING OPERATION. APPROVED PERMITS SHALL BE SUBMITTED TO THE COUNTY. DEWATERING SHALL BE DONE IN ACCORDANCE WITH SECTION 02240 – DEWATERING.

13. CONSTRUCT PERMANENT PAVEMENT AFTER ALL PIPE WORK AND GRADING IS COMPLETE.

14. ONCE CONSTRUCTION ACTIVITIES ARE COMPLETE, FINAL GRADING MAY BEGIN.

15. GRADING SHALL DIRECT RUNOFF FLOW TO THE STORM DRAINAGE STRUCTURES.

16. UPON COMPLETION OF FINAL GRADING, EROSION CONTROL MATTING, PERMANENT SEEDING, LANDSCAPING MULCHING, AND FERTILIZING MEASURES SHALL BE EMPLOYED WITHIN THE LIMITS OF DISTURBANCE AS PER CONTRACT DRAWINGS AND SPECIFICATION SECTION 02485 – GRASSING AND PLANTING AND SECTION 02500 – SURFACE RESTORATION. ALL EROSION CONTROL MEASURES SHALL REMAIN IN PLACE UNTIL ENTIRE SITE HAS BEEN STABILIZED.

17. ONCE PERMANENT STABILIZATION HAS OCCURRED, TEMPORARY SEDIMENT CONTROL MEASURES MAY BE REMOVED. ANY AREAS DISTURBED BY THE REMOVAL OF THESE MEASURES SHALL BE RETURNED AS CLOSELY AS POSSIBLE TO ORIGINAL CONDITION AND SEEDED, MULCHED AND FERTILIZED AS PER SPECIFICATION SECTION 02485 – GRASSING AND PLANTING AND SECTION 02500 – SURFACE RESTORATION.

SOIL EROSION AND SEDIMENT CONTROL NOTES

1. DUE TO THE NATURE OF THE WORK REQUIRED BY THIS CONTRACT, IT IS ANTICIPATED THE LOCATION AND NATURE OF EROSION AND SEDIMENT CONTROL MEASURES WILL BE ADJUSTED AS REQUIRED TO REFLECT THE CURRENT PHASE OF WORK. THE CONSTRUCTION SCHEDULE ADOPTED BY THE CONTRACT WILL IMPACT THE PLACEMENT AND NEED FOR SPECIFIC DEVICES REQUIRED FOR THE CONTROL EROSION. THE LOCATION AND EXTENT OF EROSION AND SEDIMENT CONTROL MEASURES SHALL BE REVISED FOR THE CONTROL OF EROSION. THE LOCATION AND EXTENT OF EROSION AND SEDIMENT CONTROL MEASURES SHALL BE REVISED AT EACH PHASE OF CONSTRUCTION THAT RESULTS IN A CHANGE OF EITHER THAT QUANTITY OR DIRECTION OF SURFACE RUNOFF FROM THE CONSTRUCTION AREAS.

2. THE PROPOSED LIMIT OF DISTURBANCE SHALL BE DEMARCATED IN THE FIELD WITH SNOW FENCE.

3. ALL EROSION CONTROL MEASURES SHALL BE IN PLACE BEFORE, OR AS SOON AS PRACTICABLE AFTER, ANY LAND CLEARING OR CONSTRUCTION ACTIVITIES MAY BEGIN.

4. ALL WORK PERFORMED SHALL BE IN ACCORDANCE WITH THE "NEW YORK STATE STANDARDS AND SPECIFICATIONS FOR EROSION AND SEDIMENT CONTROL", 2016, OR LATEST EDITION AND IN ACCORDANCE WITH THE CONTRACT DOCUMENTS.

5. REFER TO SECTION 02276– EROSIONS AND SEDIMENT CONTROL IN THE CONTRACT DOCUMENTS FOR ADDITIONAL EROSION AND SEDIMENT CONTROL PLAN.

6. CONTRACTOR SHALL OBTAIN PRIOR APPROVAL FROM THE ENGINEER FOR DEVIATIONS FROM THE APPROVED EROSION ND SEDIMENT CONTROL PLAN.

7. EROSION IN THE VICINITY OF SOIL STOCKPILES SHALL BE PREVENTED BY INSTALLING SILT FENCE REINFORCE WITH HAY BALES AROUND THE PERIMETER OF THE PILE. TEMPORARY SEEDING SHALL BE APPLIED TO THE STOCKPILE(S) IF THE PILES TO REMAIN UNUSED AND UNDISTRACTED FOR MORE THAN 14 DAYS.

8. ALL DISTURBED ARES, EXCEPT ROADWAYS, WHICH WILL REMAIN UNDISTURBED FOR MORE THAN 14 DAYS SHALL BE TEMPORARILY SEEDED WITH ½ LB. OF RYE GRASS OR MULCHED WITH 100 LBS. OF STRAW OR HAY PER 1,000 SQ. FT. ROADWAYS SHALL BE STABILIZED AS RAPIDLY AS PRACTICAL BY THE INSTALLATION OF THE BASE COURSE, BUT TEMPORARY ASPHALT STABILIZATION MAY BE REQUIRED.

9. INSPECTION OF EROSION AND SEDIMENT CONTROL MEASURES SHALL BE PERFORMED AT THE END OF EACH CONSTRUCTION DAY AND IMMEDIATELY FOLLOWING EACH RAINFALL EVENT.

10. CONTROL MEASURES SHALL BE REPAIRED OR REPLACED IMMEDIATELY AS REQUIRED TO MAINTAIN PERFORMANCE OF MEASURE. R REMOVED SEDIMENT SHALL BE DISPOSED OF IN SUCH A MANNER AS TO REDUCE FURTHER SEDIMENT TRANSPORT.

11. SEDIMENT DEPOSITS SHALL BE REMOVED WHEN THEY REACH APPROXIMATELY ½ THE HEIGHT OF THE SILT FENCE. ALL SUCH SEDIMENT SHALL BE PROPERLY DISPOSED OF IN FILL AREAS ON THE SITE, AS DIRECTED BY THE OWNER;S FIELD REPRESENTATIVE. FILL SHALL BE PROTECTED FOLLOWING DISPOSAL WITH MULCH, TEMPORARY AND/OR PERMANENT VEGETATION AND BE COMPLETELY BOUNDED ON THE DOWNHILL SIDE BY SILT FENCE.

12. ALL POINTS OF CONSTRUCTION INGRESS AND EGRESS SHALL BE PROTECTED BY WASHING ALL VEHICLE WHEELS IN A SAFE DISPOSAL AREA. ALL MATERIALS DEPOSITED ONTO PUBLIC THOROUGHFARE(S) SHALL BE REMOVED IMMEDIATELY. PROPER PRECAUTIONS SHALL BE TAKEN TO ENSURE THAT MATERIALS DEPOSITED ONTO PUBLIC THOROUGHFARES(S) ARE REMOVED SO THAT THEY DO NOT ENTER CATCH BASINS, STORM SEWERS, COMBINED SEWERS, OR ROADSIDE SWALES.

13. PREVENT THE DISCHARGE OF POLLUTANTS FROM SPILLS AND LEAKS AND IMPLEMENT CHEMICAL SPILL AND LEAK PREVENTION AND RESPONSE PROCEDURES.

14. SILT THAT LEAVES THE SITE DESPITE THE REQUIRED PRECAUTIONS SHALL BE COLLECTED AND REMOVED.

15. MAINTAIN DUST CONTROL MEASURES THROUGH DRY WEATHER PERIODS UNTIL ALL DISTURBED AREAS ARE STABILIZED BY SPRAYING WATER UNTIL THE SURFACE IS WET.

16. ALL EROSION AND SEDIMENT CONTROL MEASURES AND DEVICES SHALL REMAIN IN PLACE AND SHALL BE MAINTAINED BY THE CONTRACTOR UNTIL THE SITE HAS BEEN FULL STABILIZED.

LINETYPES

	PROPOSED ITEMS
	EXISTING ITEMS
	HIDDEN ITEMS
	DEMOLITION ITEMS
	ABANDONED ITEMS
	CENTER LINE
	MATCH LINE
	FUTURE ITEMS

Hazen ARCADIS
A JOINT VENTURE

LEGAL ENTITY:
ARCADIS CE, INC.

SEALS

STATE OF NEW YORK
RODRIGO JAVIER PENA-LANG
096577
07/21/2020
LICENSED PROFESSIONAL ENGINEER

NASSAU COUNTY, NEW YORK
DEPARTMENT OF PUBLIC WORKS

LONG BEACH WPCP CONSOLIDATION PUMP STATION CONVERSION

LONG BEACH WASTEWATER POLLUTION CONTROL PLANT

NO.	DATE	ISSUED FOR	BY

COPYRIGHT: 2017 HAZEN AND SAWYER/ ARCADIS A JOINT VENTURE

DATE:	JULY 2020
PROJECT NO.:	00726790.0001
FILE NAME:	C-01
DESIGNED BY:	L. JONES
DRAWN BY:	H. DAVE
CHECKED BY:	R. PENA-LANG

SHEET TITLE

CIVIL

CIVIL NOTES, SYMBOLS AND ABBREVIATIONS

SCALE: NONE

C-01

SHEET 20 OF 112

User:HDAVE Spec:AUS-NCSMOD Filter:F:\SHEETS\C-01.DWG Scale:1:1 SavedDate:7/21/2020 Time:10:00 Plot Date: Dave, Hetvi; 7/21/2020; 13:28 ; Layout:C11-01

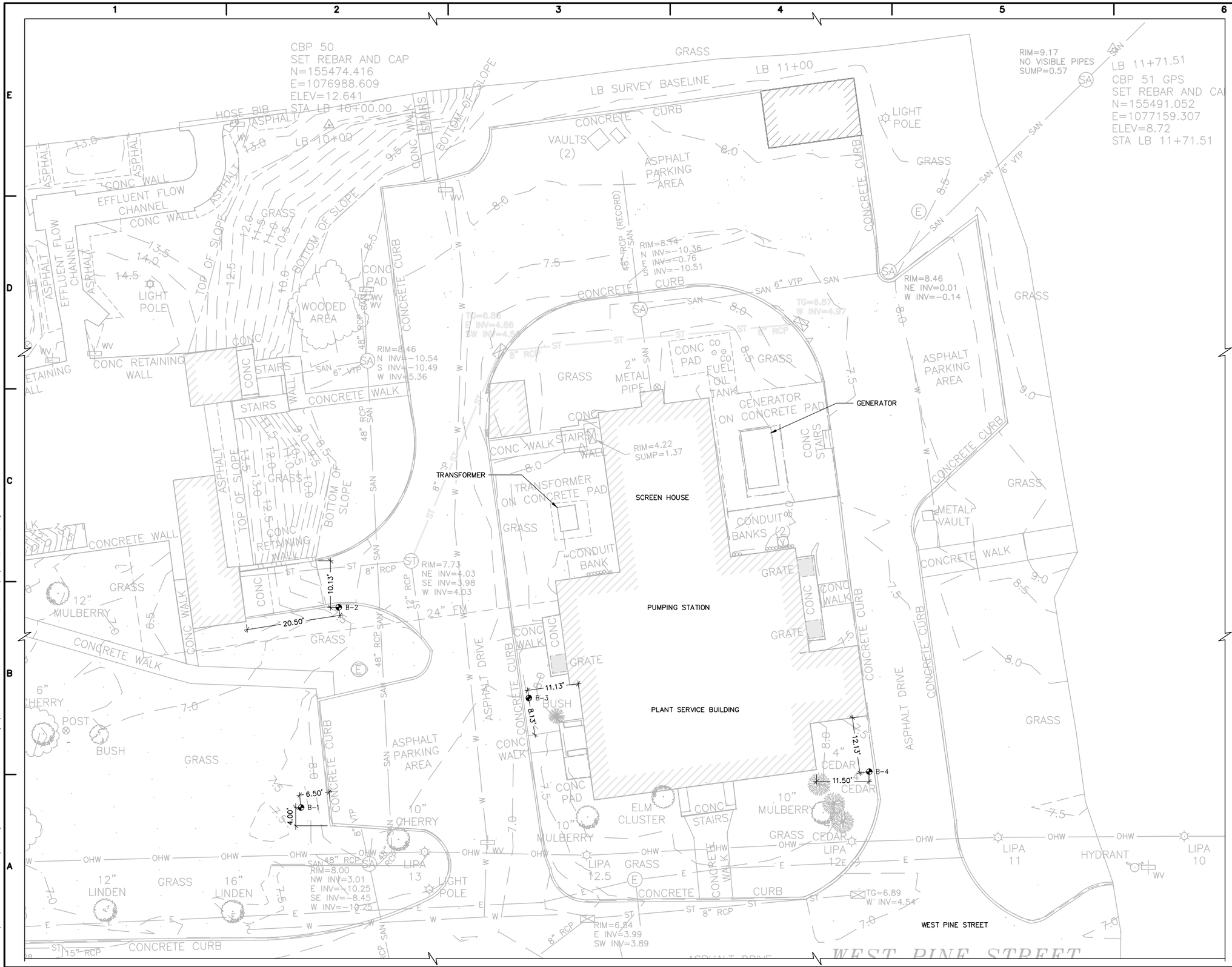

Hazen ARCADIS
A JOINT VENTURE

LEGAL ENTITY:
ARCADIS CE, INC.

SEALS

NASSAU COUNTY, NEW YORK
DEPARTMENT OF PUBLIC WORKS

LONG BEACH WPCP CONSOLIDATION PUMP STATION CONVERSION

LONG BEACH WASTEWATER POLLUTION CONTROL PLANT

NO.	DATE	ISSUED FOR	BY

COPYRIGHT: 2017 HAZEN AND SAWYER/ ARCADIS A JOINT VENTURE

DATE:	JULY 2020
PROJECT NO.:	00726790.0001
FILE NAME:	C-02
DESIGNED BY:	L. JONES
DRAWN BY:	H. DAVE
CHECKED BY:	R. PEÑA-LANG

SHEET TITLE

CIVIL

EXISTING SITE PLAN

SCALE: 1"=10'-0"

C-02

SHEET 21 OF 112

User:HDAVE Spec:AUS-NCSMOD File:F:\SHEETS\C-02.DWG Scale:1:1 SavedDate:7/21/2020 Time:09:55 Plot Date: Dave, Hetvi; 7/21/2020; 13:30 ; Layout:LAYOUT1

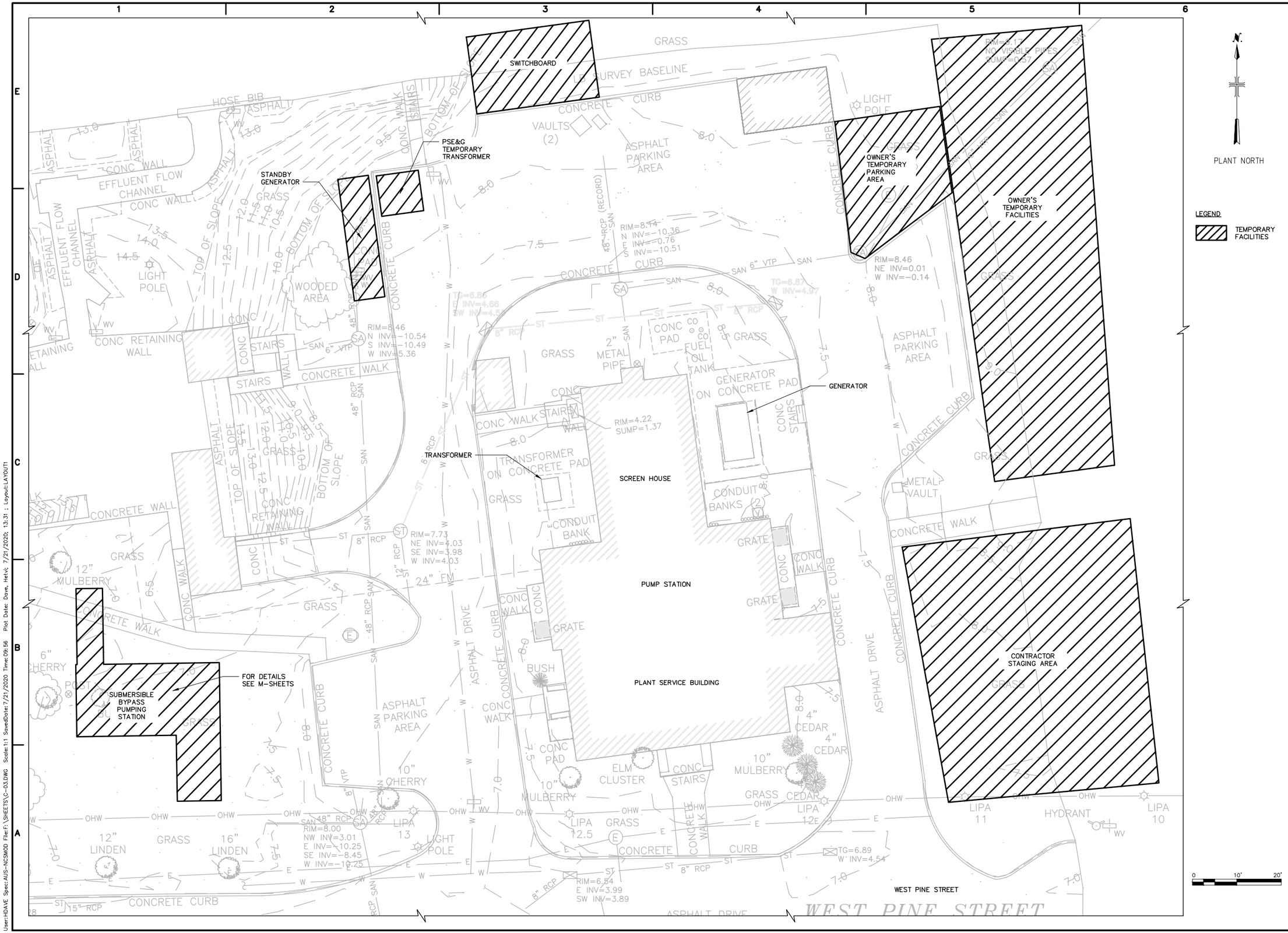

Hazen ARCADIS
A JOINT VENTURE

LEGAL ENTITY:
ARCADIS CE, INC.

SEALS

NASSAU COUNTY, NEW YORK
DEPARTMENT OF PUBLIC WORKS

LONG BEACH WPCP CONSOLIDATION
PUMP STATION CONVERSION

LONG BEACH WASTEWATER POLLUTION CONTROL PLANT

NO.	DATE	ISSUED FOR	BY

COPYRIGHT: 2017 HAZEN AND SAWYER/ ARCADIS A JOINT VENTURE

DATE: JULY 2020
PROJECT NO.: 00726790.0001
FILE NAME: C-03
DESIGNED BY: L. JONES
DRAWN BY: H. DAVE
CHECKED BY: R. PENA-LANG

SHEET TITLE

CIVIL

EXISTING AND STAGING PLAN

SCALE: 1"=10'-0"

C-03

SHEET 22 OF 112

User:HDAVE Spec:AUS-NCSMOD File:F:\SHEETS\C-03.DWG Scale:1:1 SavedDate:7/21/2020 Time:09:56 Plot Date: Dave, Hetvi; 7/21/2020; 13:31 ; Layout:LAYOUT1

DEMOLITION KEY NOTES:

1. EXISTING STRUCTURE TO REMAIN AND SHALL BE PROTECTED FOR THE DURATION OF CONSTRUCTION
2. DEMOLISH STORAGE SHED AND COORDINATE WITH OWNER ON WHERE TO STORE EXISTING ITEMS CONTAINED WITHIN THE SHED

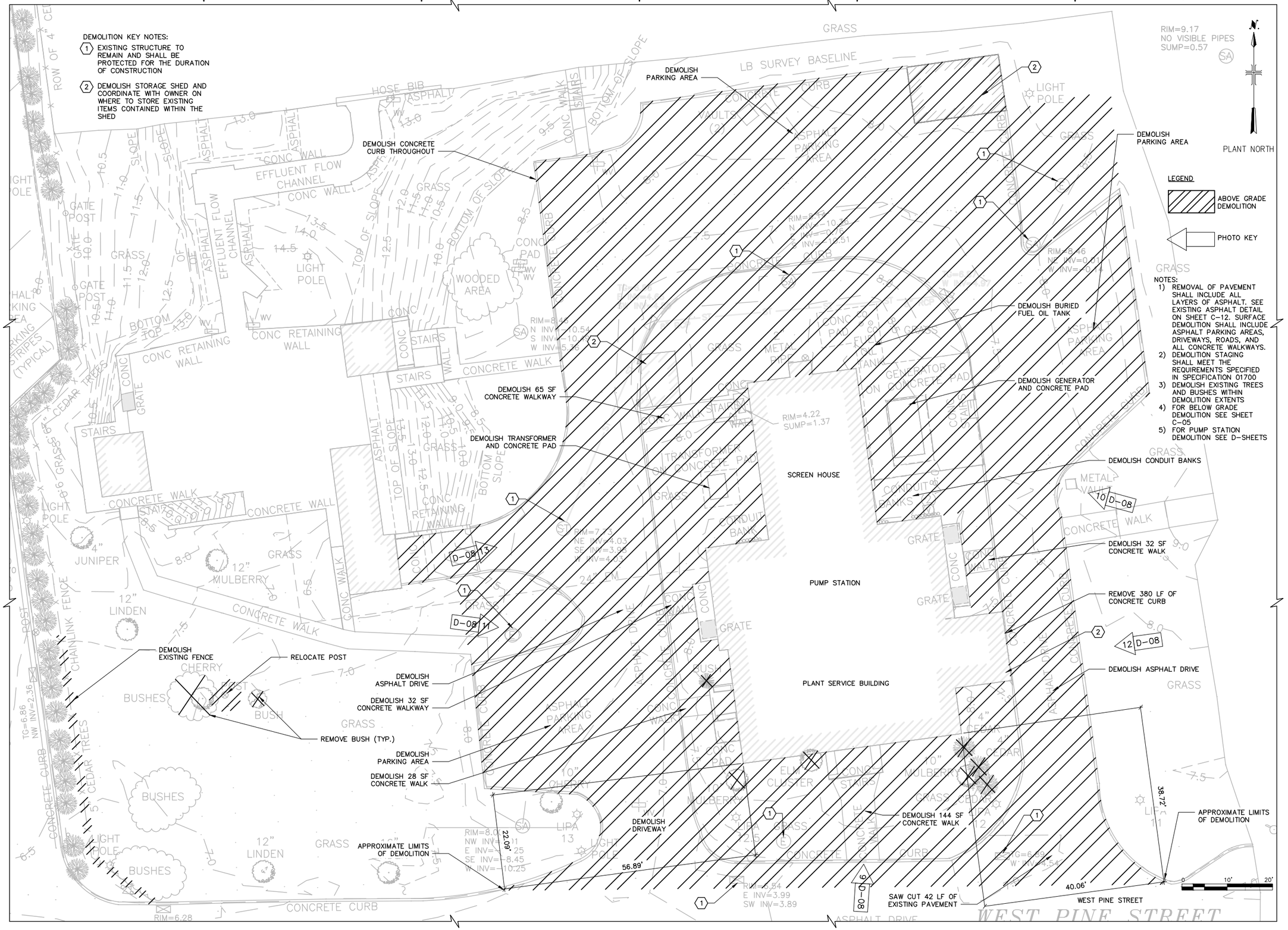

NOTES:

1) REMOVAL OF PAVEMENT SHALL INCLUDE ALL LAYERS OF ASPHALT. SEE EXISTING ASPHALT DETAIL ON SHEET C-12. SURFACE DEMOLITION SHALL INCLUDE ASPHALT PARKING AREAS, DRIVEWAYS, ROADS, AND ALL CONCRETE WALKWAYS.
2) DEMOLITION STAGING SHALL MEET THE REQUIREMENTS SPECIFIED IN SPECIFICATION 01700
3) DEMOLISH EXISTING TREES AND BUSHES WITHIN DEMOLITION EXTENTS
4) FOR BELOW GRADE DEMOLITION SEE SHEET C-05
5) FOR PUMP STATION DEMOLITION SEE D-SHEETS

Hazen ARCADIS
A JOINT VENTURE

LEGAL ENTITY:
ARCADIS CE, INC.

SEALS

NASSAU COUNTY, NEW YORK
DEPARTMENT OF PUBLIC WORKS

LONG BEACH WPCP CONSOLIDATION
PUMP STATION CONVERSION

LONG BEACH WASTEWATER POLLUTION CONTROL PLANT

NO.	DATE	ISSUED FOR	BY

COPYRIGHT: 2017 HAZEN AND SAWYER/ ARCADIS A JOINT VENTURE

DATE:	JULY 2020
PROJECT NO.:	00726790.0001
FILE NAME:	C-04
DESIGNED BY:	L. JONES
DRAWN BY:	H. DAVE
CHECKED BY:	R. PENA-LANG

SHEET TITLE

CIVIL

EXISTING SITE FEATURES DEMOLITION PLAN

SCALE: 1"=10'-0"

C-04

SHEET 23 OF 112

User:HDAVE Spec:AUS-NCSMOD File:F:\SHEETS\C-04.DWG Scale:1:1 SavedDate:7/21/2020 Time:11:45 Plot Date: Dave, Hetvi: 7/21/2020; 13:32 ; Layout:LAYOUT1

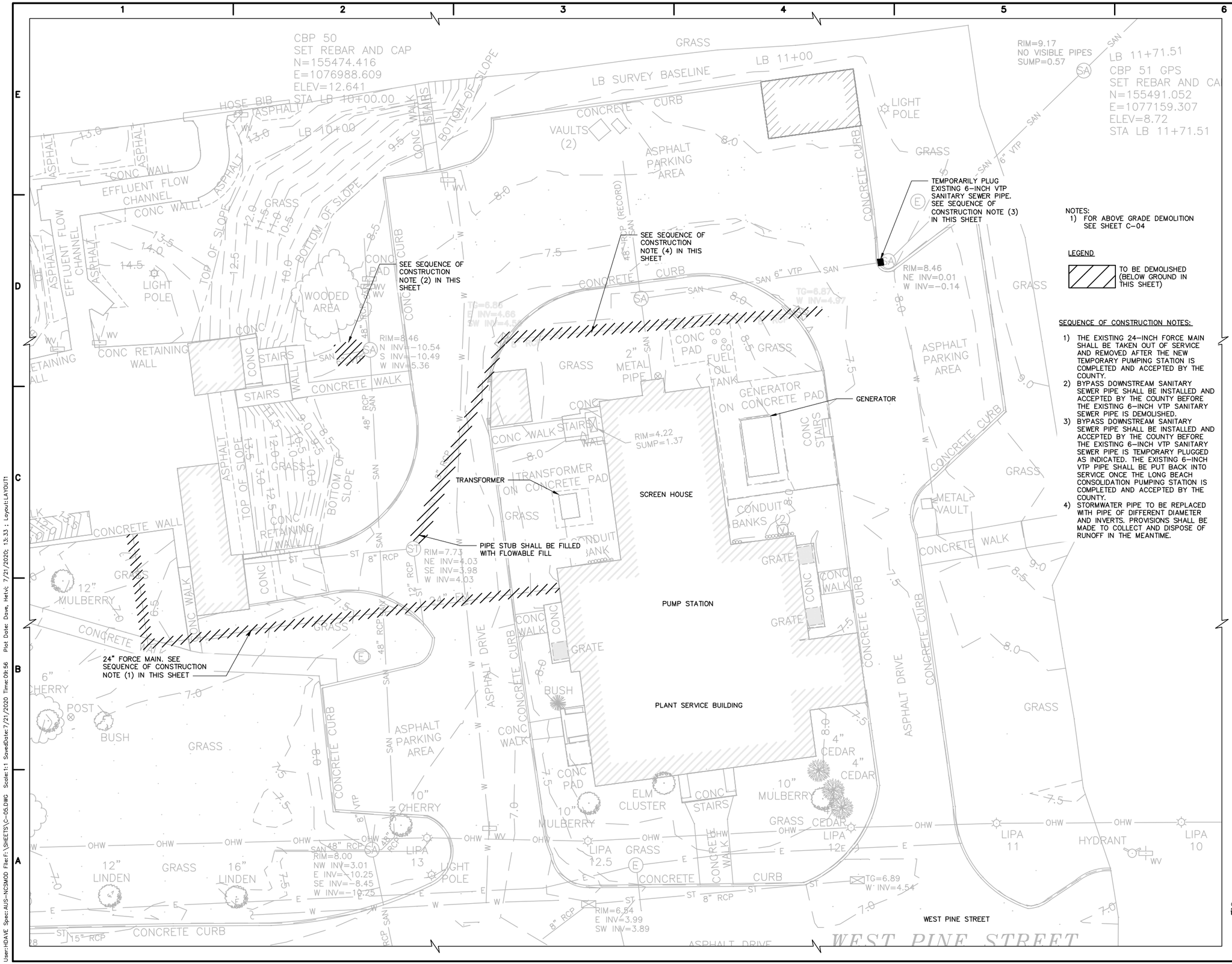

NOTES:
1) FOR ABOVE GRADE DEMOLITION SEE SHEET C-04

LEGEND

TO BE DEMOLISHED (BELOW GROUND IN THIS SHEET)

SEQUENCE OF CONSTRUCTION NOTES:

1) THE EXISTING 24-INCH FORCE MAIN SHALL BE TAKEN OUT OF SERVICE AND REMOVED AFTER THE NEW TEMPORARY PUMPING STATION IS COMPLETED AND ACCEPTED BY THE COUNTY.
2) BYPASS DOWNSTREAM SANITARY SEWER PIPE SHALL BE INSTALLED AND ACCEPTED BY THE COUNTY BEFORE THE EXISTING 6-INCH VTP SANITARY SEWER PIPE IS DEMOLISHED.
3) BYPASS DOWNSTREAM SANITARY SEWER PIPE SHALL BE INSTALLED AND ACCEPTED BY THE COUNTY BEFORE THE EXISTING 6-INCH VTP SANITARY SEWER PIPE IS TEMPORARY PLUGGED AS INDICATED. THE EXISTING 6-INCH VTP PIPE SHALL BE PUT BACK INTO SERVICE ONCE THE LONG BEACH CONSOLIDATION PUMPING STATION IS COMPLETED AND ACCEPTED BY THE COUNTY.
4) STORMWATER PIPE TO BE REPLACED WITH PIPE OF DIFFERENT DIAMETER AND INVERTS. PROVISIONS SHALL BE MADE TO COLLECT AND DISPOSE OF RUNOFF IN THE MEANTIME.

Hazen ARCADIS
A JOINT VENTURE

LEGAL ENTITY:
ARCADIS CE, INC.

SEALS

NASSAU COUNTY, NEW YORK
DEPARTMENT OF PUBLIC WORKS

LONG BEACH WPCP CONSOLIDATION PUMP STATION CONVERSION

LONG BEACH WASTEWATER POLLUTION CONTROL PLANT

NO.	DATE	ISSUED FOR	BY

COPYRIGHT: 2017 HAZEN AND SAWYER/ ARCADIS A JOINT VENTURE

DATE: JULY 2020
PROJECT NO.: 00726790.0001
FILE NAME: C-05
DESIGNED BY: L. JONES
DRAWN BY: H. DAVE
CHECKED BY: R. PENA-LANG

SHEET TITLE

CIVIL

DEMOLITION BURIED UTILITIES PLAN

SCALE: 1"=10'-0"

C-05

SHEET 24 OF 112

User:HDAVE Spec:AUS-NCSMOD File:F:\SHEETS\C-05.DWG Scale:1:1 SavedDate:7/21/2020 Time:09:56 Plot Date: Dave, Hetvi; 7/21/2020; 13:33 ; Layout:LAYOUT1

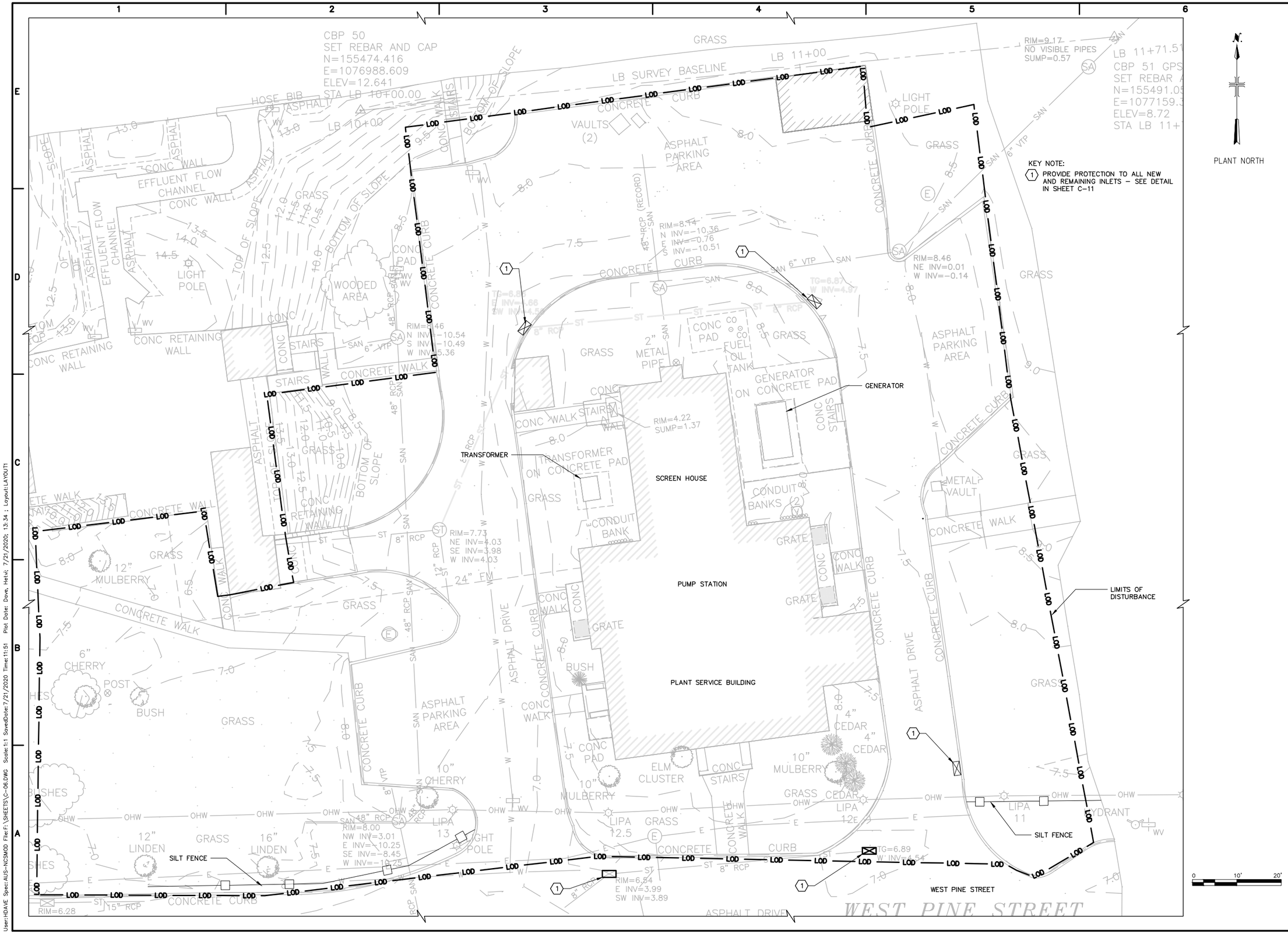

Hazen ARCADIS
A JOINT VENTURE

LEGAL ENTITY:
ARCADIS CE, INC.

SEALS

NASSAU COUNTY, NEW YORK
DEPARTMENT OF PUBLIC WORKS

LONG BEACH WPCP CONSOLIDATION
PUMP STATION CONVERSION

LONG BEACH WASTEWATER POLLUTION CONTROL PLANT

NO.	DATE	ISSUED FOR	BY

COPYRIGHT: 2017 HAZEN AND SAWYER/ ARCADIS A JOINT VENTURE

DATE:	JULY 2020
PROJECT NO.:	00726790.0001
FILE NAME:	C-06
DESIGNED BY:	L. JONES
DRAWN BY:	H. DAVE
CHECKED BY:	R. PENA-LANG

SHEET TITLE

CIVIL

EROSION AND SEDIMENT CONTROL PLAN

SCALE: 1"=10'-0"

C-06

SHEET 25 OF 112

User:HDAVE Spec:AUS-NCSMOD File:F:\SHEETS\C-06.DWG Scale:1:1 SavedDate:7/21/2020 Time:11:51 Plot Date: Dave, Hetvi; 7/21/2020; 13:34 ; Layout:LAYOUT1

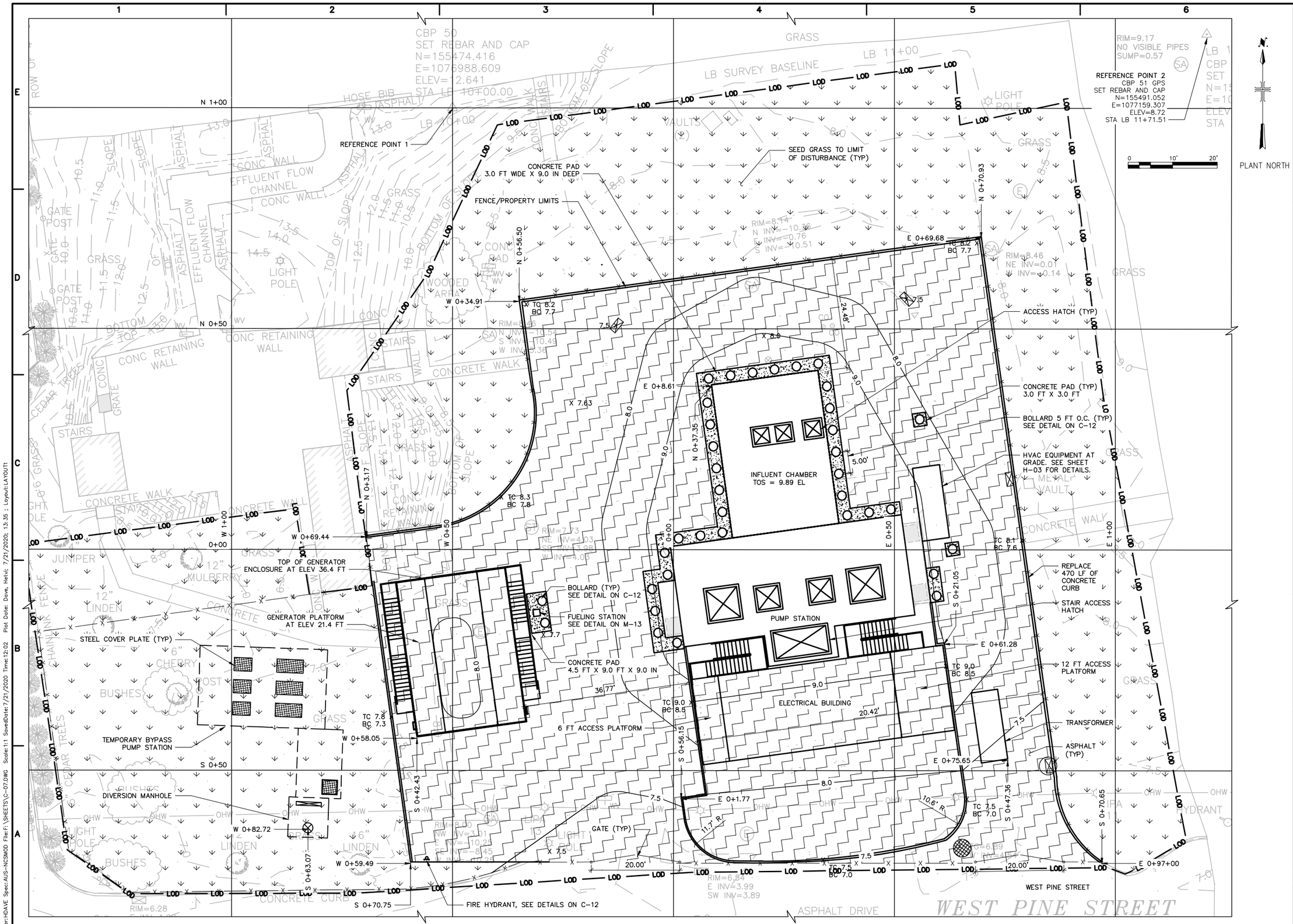

Hazen ARCADIS
A JOINT VENTURE

LEGAL ENTITY:
ARCADIS CE, INC.

SEALS

NASSAU COUNTY, NEW YORK
DEPARTMENT OF PUBLIC WORKS

LONG BEACH WPCP CONSOLIDATION
PUMP STATION CONVERSION

LONG BEACH WASTEWATER POLLUTION CONTROL PLANT

NO.	DATE	ISSUED FOR	BY

COPYRIGHT: 2017 HAZEN AND SAWYER/ ARCADIS A JOINT VENTURE

DATE:	JULY 2020
PROJECT NO.:	00726790.0001
FILE NAME:	C-07
DESIGNED BY:	L. JONES
DRAWN BY:	H. DAVE
CHECKED BY:	R. PENA LANG

SHEET TITLE

CIVIL

SITE PLAN

SCALE: 1"=10'-0"

C-07

SHEET 26 OF 112

User:HDAVE Spec:AUS-NCSMOD File:F:\SHEETS\C-07.DWG Scale:1:1 SavedDate:7/21/2020 Time:12:02 Plot Date: Dave, Hetvi; 7/21/2020; 13:35 ; Layout:LAYOUT1

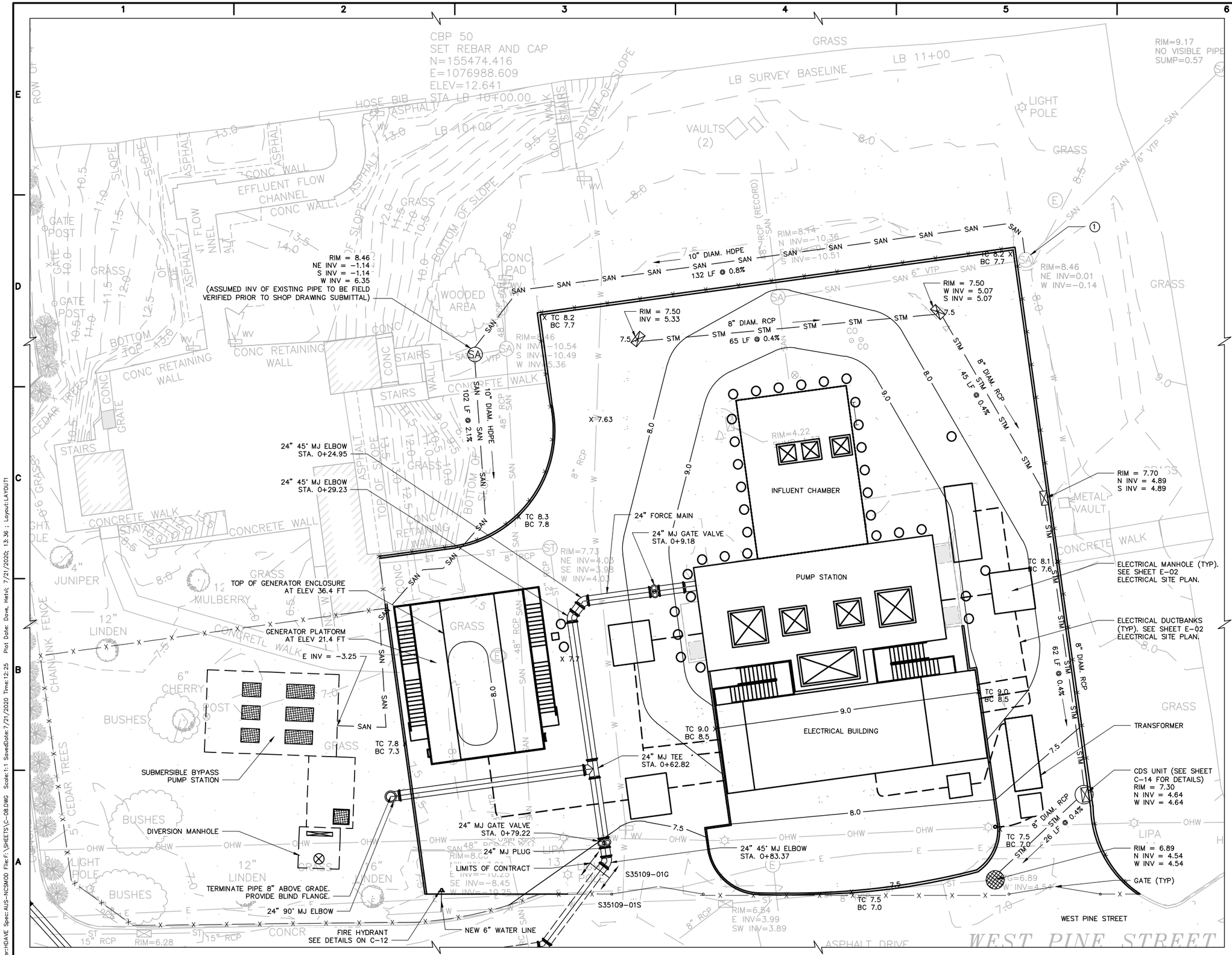

1

SUGGESTED SEQUENCE OF CONSTRUCTION FOR SANITARY PIPING

1. CORE EXISTING MANHOLE TO PROVIDE NORTH INV = -0.14. EXISTING WEST INV TO BE TEMPORARILY PLUGGED.
2. TEMPORARILY PLUG 6"-SAN LOCATED ON WEST SIDE OF MANHOLE. PLUG SHALL LAST THE DURATION OF CONTRACT.
3. ONCE THE NEW PUMP STATION PLUS THE FORCE MAIN (BY OTHERS), ARE CONNECTED, TESTED AND ACCEPTED BY THE COUNTY, THE CONTRACTOR SHALL PLACE MANHOLE BACK TO ORIGINAL CONDITIONS BY REMOVING AND PLUGGING TEMPORARY 10-INCH SANITARY LINE AND RE-CONNECTING 6"-SANITARY.

Hazen ARCADIS
A JOINT VENTURE

LEGAL ENTITY:
ARCADIS CE, INC.

SEALS

STATE OF NEW YORK
RODRIGO JAVIER BENLANG
LICENSED PROFESSIONAL ENGINEER
096577
07/21/20

NASSAU COUNTY, NEW YORK
DEPARTMENT OF PUBLIC WORKS

LONG BEACH WPCP CONSOLIDATION PUMP STATION CONVERSION

LONG BEACH WASTEWATER POLLUTION CONTROL PLANT

NO.	DATE	ISSUED FOR	BY

COPYRIGHT: 2017 HAZEN AND SAWYER/ ARCADIS A JOINT VENTURE

DATE: JULY 2020
PROJECT NO.: 00726790.0001
FILE NAME: C-08
DESIGNED BY: L. JONES
DRAWN BY: H. DAVE
CHECKED BY: R. PENA LANG

SHEET TITLE

CIVIL

BURIED UTILITIES PLAN

SCALE: 1"=10'-0"

C-08

SHEET 27 OF 112

User:HDAVE Spec:AUS-NCSMOD File:F:\SHEETS\C-08.DWG Scale:1:1 SavedDate:7/21/2020 Time:12:25 Plot Date: Dave, Hetvi: 7/21/2020; 13:36 ; Layout:LAYOUT1

NOTES:
1) CONTRACTOR SHALL RESEED AREA DISTURBED BY CONSTRUCTION ACTIVITIES.
2) TEMPORARY GATE SHALL BE PROVIDED AT CONSTRUCTION ENTRANCE. FOR CONSTRUCTION ENTRANCE, SEE DETAIL ON SHEET C–12.
3) CONCRETE SIDEWALK SHALL BE REPAIRED AS REQUIRED TO MEET OR EXCEED CONDITIONS PRIOR TO CONSTRUCTION ACTIVITIES.
4) LIGHT POLE TO BE REMOVED AND RELOCATED NORTH OF THE SEWER CONNECTION CHAMBER WITHIN THE LIMITS OF DISTURBANCE.
5) CONTRACTOR SHALL INTERCEPT EXISTING CIRCUIT AND EXTEND CONDUIT AND WIRING TO NEW LOCATION AS REQUIRED FOR FIXTURE OPERATION.
6) CONTRACTOR SHALL MATCH COLOR, FINISH, SIZE AND HEIGHT ABOVE GRADE OF THE CONCRETE BASE FOR THE LIGHT POLE TO EXISTING LIGHT POLE CONCRETE BASES.
7) CONTRACTOR SHALL RE–GRADE SITE ONCE CONSTRUCTION IS COMPLETE TO MATCH THE GRADING OF EXISTING CONTOURS.

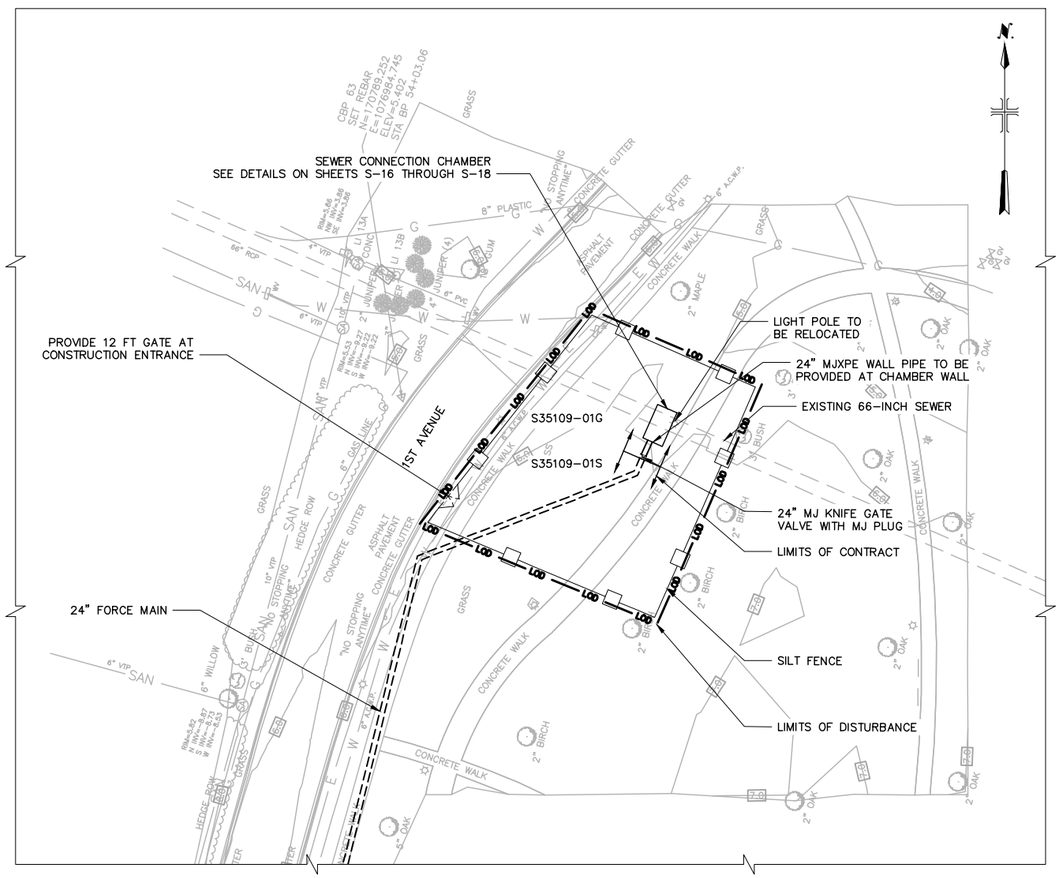

66" INTERCEPTOR PLAN

SCALE: 1" = 30'–0" 0 30' 60'

BAY PARK STP – KEY MAP

SCALE: 1" = 200'–0" 0 200' 400'

Hazen ARCADIS
A JOINT VENTURE

LEGAL ENTITY:
ARCADIS CE, INC.

SEALS

STATE OF NEW YORK
RODRIGO JAVIER TENA LANG
LICENSED PROFESSIONAL ENGINEER
096577
07/21/2020

NASSAU COUNTY, NEW YORK
DEPARTMENT OF PUBLIC WORKS

LONG BEACH WPCP CONSOLIDATION
PUMP STATION CONVERSION

LONG BEACH WASTEWATER POLLUTION CONTROL PLANT

NO.	DATE	ISSUED FOR	BY

COPYRIGHT: 2017 HAZEN AND SAWYER/ ARCADIS A JOINT VENTURE

DATE: JULY 2020
PROJECT NO.: 00726790.0001
FILE NAME: C–09
DESIGNED BY: L. JONES
DRAWN BY: J. MA
CHECKED BY: L. JONES

SHEET TITLE
CIVIL

FORCE MAIN – BAY PARK SANITARY SEWER CONNECTION

SCALE: AS SHOWN

C–09
SHEET 28 OF 112

User:HDAVE Spec:AUS–NCSMOD File:F:\SHEETS\C–09.DWG Scale:1:1 SavedDate:7/21/2020 Time:09:58 Plot Date: Dave, Hetvi; 7/21/2020; 13:37 ; Layout:LAYOUT1

NOTES:

1. SEE DRAWINGS FOR CONTRACT S35109-01S FOR THE DESIGN AND CONSTRUCTION OF THE FORCE MAIN FROM THE 24" GATE VALVE TO BAY PARK STP.

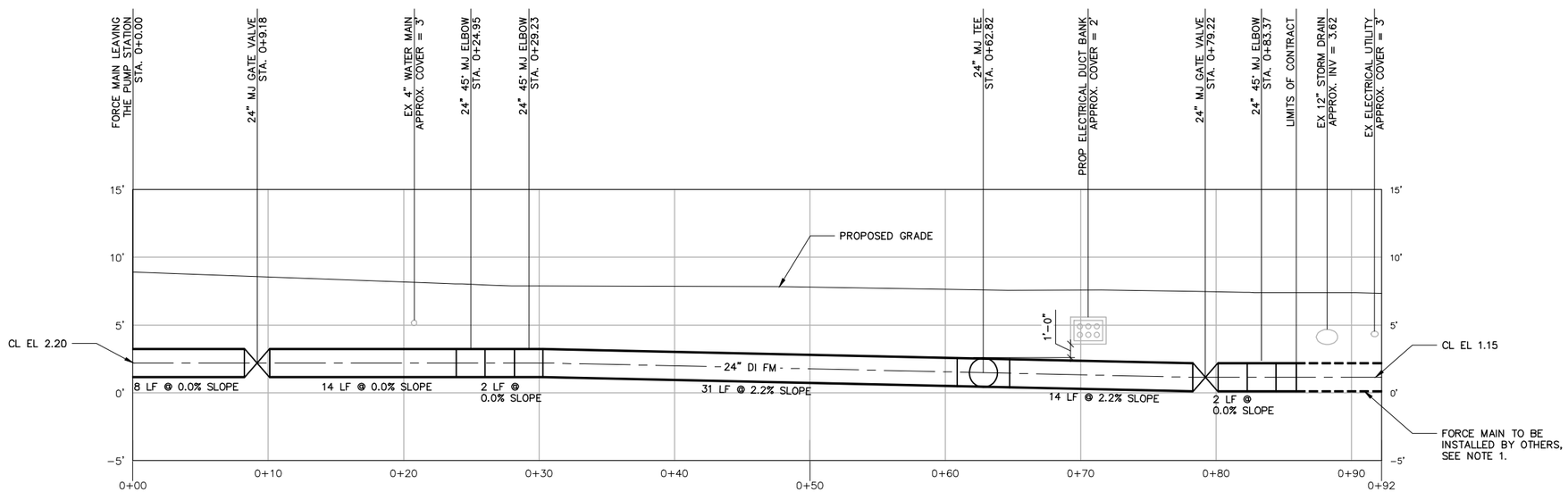

24" FORCE MAIN PROFILE

SCALE: 1" = 5'-0"

0 5' 10'

Hazen ARCADIS
A JOINT VENTURE

LEGAL ENTITY:
ARCADIS CE, INC.

SEALS

NASSAU COUNTY, NEW YORK
DEPARTMENT OF PUBLIC WORKS

LONG BEACH WPCP CONSOLIDATION
PUMP STATION CONVERSION

LONG BEACH WASTEWATER POLLUTION CONTROL PLANT

NO.	DATE	ISSUED FOR	BY

COPYRIGHT: 2017 HAZEN AND SAWYER/ ARCADIS A JOINT VENTURE

DATE: JULY 2020
PROJECT NO.: 00726790.0001
FILE NAME: C-10
DESIGNED BY: J. MA
DRAWN BY: J. MA
CHECKED BY: L. JONES

SHEET TITLE

CIVIL

FORCE MAIN - PROFILE

SCALE: 1" = 5'-0"

C-10

SHEET 29 OF 112

User:HDAVE Spec:AUS-NCSMOD File:F:\SHEETS\C-10.DWG Scale:1:1 SavedDate:7/21/2020 Time:09:58 Plot Date: Dave, Hetvi: 7/21/2020; 13:38 ; Layout:LAYOUT1

SEEDING SCHEDULE

1. TIME OF PLANTING:

   FALL PLANTING IS PREFERRED. SEED AFTER AUGUST 15. IN THE SPRING PLANT UNTIL MAY 15. ANY SEEDING DONE BETWEEN MAY 15 AND AUGUST 15 MAY REQUIRE IRRIGATION TO INSURE SUCCESSFUL SEEDING.

2. SITE PREPARATION:

   A. INSTALL NEEDED WATER AND EROSION CONTROL MEASURES AND BRING THE AREA TO BE SEEDED TO DESIRED GRADES. A MINIMUM OF 4 INCHES OF TOPSOIL IS REQUIRED.

SITE CONDITIONS	INTENDED USE	MIN. TOPSOIL DEPTH
DEEP SAND OR LOAMY SAND	MOWED LAWN	6 IN
	TALL LEGUMES, UNMOWED	2 IN
	TALL GRASS, UNMOWED	1 IN
DEEP SANDY LOAM	MOWED LAWN	5 IN
	TALL LEGUMES, UNMOWED	2 IN
	TALL GRASS, UNMOWED	NONE
SIX INCHES OR MORE: SILT LOAM, LOAM, OR SILT	MOWED LAWN	4 IN
	TALL LEGUMES, UNMOWED	1 IN
	TALL GRASS, UNMOWED	1 IN

   B. PREPARE SEEDBED LOOSENING SOIL TO A DEPTH OF 4 – 6 INCHES

   C. REMOVE ALL STONES OVER 1 INCH IN DIAMETER, STICKS AND FOREIGN MATTER FROM THE SURFACE

   D. LIME TO ATTAIN A pH OF 6.0 IN THE UPPER 2 INCHES OF SOIL.

   E. FERTILIZE AS PER SOIL TEST OR APPLY 600 POUNDS OF 5–10–10 OR EQUIVALENT PER ACRE (14 LBS./1000 SQ.FT)

   F. INCORPORATE LIME AND FERTILIZER IN TOP 2–4 INCHES OF TOPSOIL.

   G. SMOOTH AND FIRM THE SEEDBED.

3. PLANTING:

   USE A CULTIPACKER TYPE SEEDER IF POSSIBLE. SEED TO A DEPTH OF 1/8 TO 1/4 INCH. IF SEED IS TO BE BROADCAST, CULTIPACK OR ROLL AFTER SEEDING. IF HYDROSEEDED, LIME AND FERTILIZER MAY BE APPLIED THROUGH THE SEEDER AND ROLLING IS NOT PRACTICAL.

4. MULCHING:

   FOR GRASS/LEGUME ESTABLISHMENT PROVIDE STRAW (SMALL GRAIN) MULCH APPLIED AT 2 TON/ACRE (90 LBS./1000 SQ. FT.) AND ANCHORED WITH WOOD FIBER MULCH (HYDROMULCH) AT 500 – 750 LBS./ACRE (11 – 17 LBS./1000 SQ. FT.) OR MULCH AS DEFINED IN SPECIFICATION 02910. THE WOOD FIBER MULCH MUST BE APPLIED THROUGH A HYDROSEEDER IMMEDIATELY AFTER MULCHING.

5. SEED MIXTURES (TO BE APPLIED AT 0.20 LB/1000 SF):

SEED MIXTURES: SPECIES BY WEIGHT	APPLICATION RATE LBS/1000 SF	FLBS/ACRE
60% NASSAU KENTUCKY BLUEGRASS	3	132
20% JAMESTOWN CHEWINGS FESCUE	1	44
20% PALMER PERENNIAL RYEGRASS	1	44
TOTAL	5	220

6. HYDROSEEDING MIXTURES

SPECIES BY WEIGHT	APPLICATION RATE LBS/1000 SF	LBS/ACRE
40% CREEPING RED FESCUE	2.4	104
30% REPELL II PERENNIAL RYEGRASS	1.8	79
20% ANNUAL RYEGRASS	1.2	52
10% BARON KENTUCKY RYEGRASS	0.6	27
TOTAL	6	262

HYDROSEEDING SOLUTION SHALL CONSIST OF THE FOLLOWING COMPONENTS:

GRASS SEED	6LBS/1000 SF
CELLULOSE MULCH	32LBS/1000 SF
FERTILIZER	15LBS/1000 SF
SUPERPHOSPHATE	20LBS/1000 SF

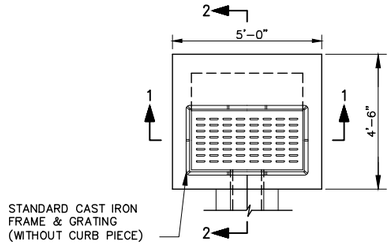

PLAN (WITH CASTING)

NOT TO SCALE

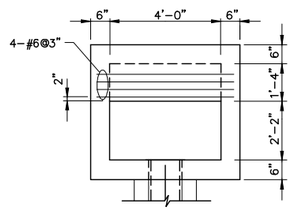

PLAN (WITHOUT CASTING)

NOT TO SCALE

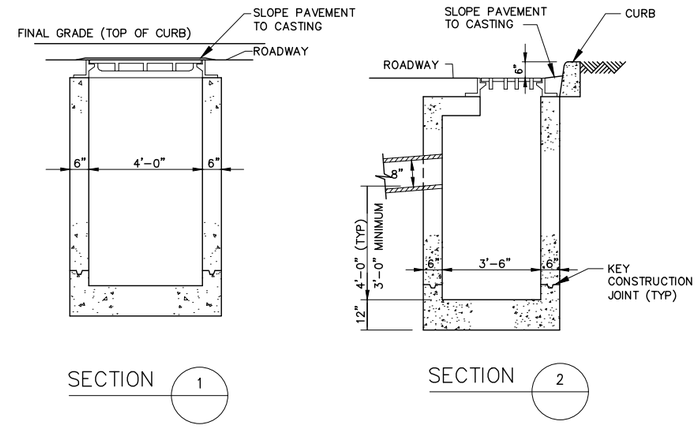

NOTES:

1. REFER TO DWG NO. C–08 FOR LOCATION OF CATCH BASIN.
2. LOCATION AND ANGLE OF BASIN CONNECTION MAY BE VARIED TO SUIT FIELD CONDITIONS
3. PRECAST CONCRETE STRUCTURE TO WHISTAND HS20 LOADING.
4. CONCRETE IS TO BE CLASS 40. REBARS–GRADE 60.

CATCH BASIN

NOT TO SCALE

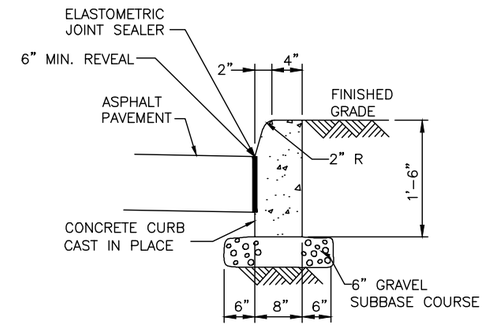

CONCRETE CURB

NOT TO SCALE

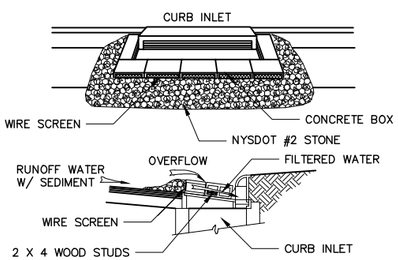

INLET PROTECTION DETAIL

NOT TO SCALE

CONSTRUCTION SPECIFICATIONS

1. LAY ONE BLOCK ON EACH SIDE OF THE STRUCTURE ON ITS SIDE FOR DEWATERING. FOUNDATION SHALL BE 2 INCHES MINIMUM BELOW REST OF INLET AND BLOCKS SHALL BE PLACED AGAINST INLET SUPPORT.
2. HARDWARE CLOTH OR 1/2" WIRE MESH SHALL BE PLACED OVER BLOCK OPENINGS TO SUPPORT STONE.
3. USE CLEAN STONE OR GRAVEL 1/2 – 3/4 INCH IN DIAMETER PLACED 2 INCHES BELOW THE TOP OF THE BLOCK ON A 2:1 SLOPE OR FLATTER.
4. FOR STONE STRUCTURES ONLY, 1 FOOT THICK LAYER OF THE FILTER STONE WILL BE PLACED AGAINST THE 3 INCH STONE AS SHOWN.
5. FOR INLETS IN ROADWAYS WITH HEAVY TRAFFIC CONDITIONS PREVENT THE PLACEMENT OF BLOCKS AND STONE FOR INLET PROTECTION PREFABRICATED FILTER INSERTS MAY BE USED AS DIRECTED BY THE ENGINEER.

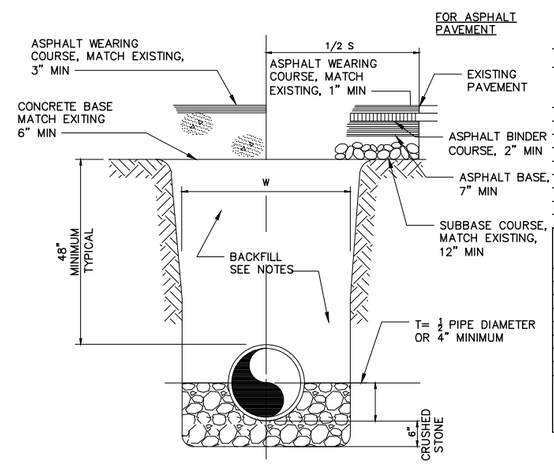

TRENCH EXCAVATION LIMITS		
INTERNAL DIAMETER OF PIPE	W WIDTH OF TRENCH MAX	W=MIN
4"–6"	3'–9"	2'–0"
8"–10"	3'–9"	2'–2"
12"	3'–9"	O.D.+2'
14"–16"	4'–2"	O.D.+2'
18"	4'–4"	O.D.+2'
20",21"	4'–8"	O.D.+2'
24"	4'–11"	O.D.+2'
27"	5'–9"	O.D.+2'
30"	6'–7"	O.D.+2'

DEPTH OF CUT	S MAXIMUM PAVEMENT REPLACEMENT WIDTH
0–6'	S=W+4'
>6–8'	S=W+8'
>8–10'	S=W+12'
>10–12'	S=W+16'
>12–14'	S=W+20'
>14–16'	S=W+24'
>16–18'	S=W+28'
>18'	S=W+32'

W = TRENCH WIDTH AT BOTTOM OF PIPE. TRENCH SIDE SLOPES SHALL BE IN ACCORDANCE WITH OSHA REQUIREMENTS.

TYPICAL TRENCH

NOT TO SCALE

NOTES:

1. ALL TRENCHES SHALL BE BACKFILLED WITH GOOD TO EXCELLENT FILL AS PER SPECIFICATION 2200 EARTHWORK

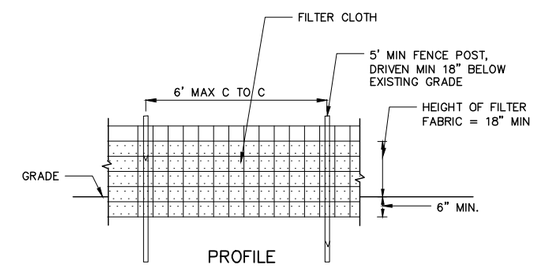

PROFILE

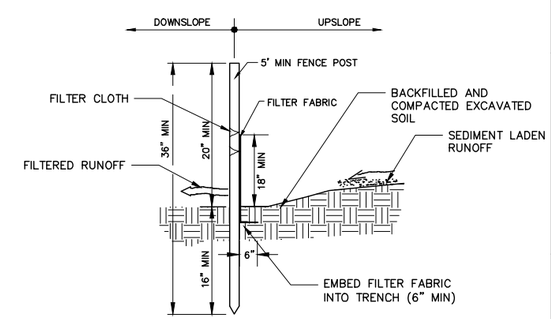

CROSS SECTION

SILT FENCE DETAIL

NOT TO SCALE

CONSTRUCTION SPECIFICATIONS

1. FILTER FABRIC TO BE FASTENED SECURELY TO WOODEN STAKES.
2. WHEN TWO SECTIONS OF FILTER FABRIC ADJOIN EACH OTHER, THEY SHALL BE OVERLAPPED BY SIX INCHES AND FOLDED.
3. MAINTENANCE SHALL BE PERFORMED REGULARLY AND MATERIAL REMOVED WHEN BULGES OR HOLES DEVELOP IN THE SILT FENCE, OR AS REQUIRED BY THE ENGINEER.
4. PREFABRICATED UNITS SHALL BE GEOFAB, ENVIROFENCE, OR APPROVED EQUIVALENT.

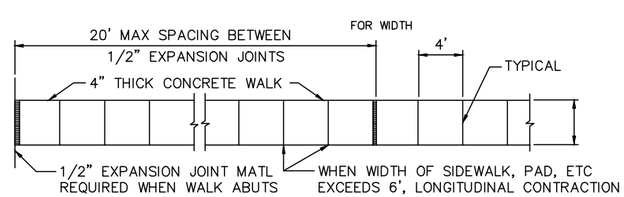

TYPICAL SIDEWALK

NOT TO SCALE

NOTES:

1. FOR REINFORCING DETAILS SEE SPECIFICATION 02529 CONCRETE CURBS, GUTTERS AND SIDEWALKS

Hazen ARCADIS A JOINT VENTURE

LEGAL ENTITY: ARCADIS CE, INC.

SEALS

NASSAU COUNTY, NEW YORK

DEPARTMENT OF PUBLIC WORKS

LONG BEACH WPCP CONSOLIDATION PUMP STATION CONVERSION

LONG BEACH WASTEWATER POLLUTION CONTROL PLANT

NO.	DATE	ISSUED FOR	BY

COPYRIGHT: 2017 HAZEN AND SAWYER/ ARCADIS A JOINT VENTURE

DATE:	JULY 2020
PROJECT NO.:	00726790.0001
FILE NAME:	C–11
DESIGNED BY:	L. JONES
DRAWN BY:	H. DAVE
CHECKED BY:	R. PENA–LANG

SHEET TITLE

CIVIL

DETAILS SHEET 1

SCALE: NONE

C–11

SHEET 30 OF 112

User:HDAVE Spec:AUS-NCSMOD File:F:\SHEETS\C-11.DWG Scale:1:1 SavedDate:7/21/2020 Time:09:58 Plot Date: Dave, Hetvi; 7/21/2020; 13:38 ; Layout:LAYOUT1

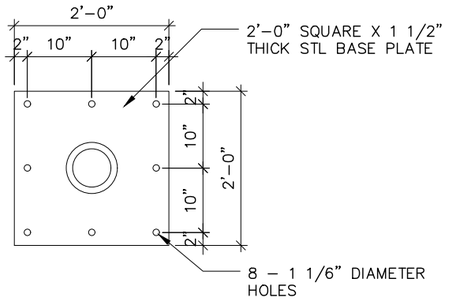

PLAN
TYPICAL BOLLARD MOUNTED DETAIL

SCALE: 3/4"=1'-0"

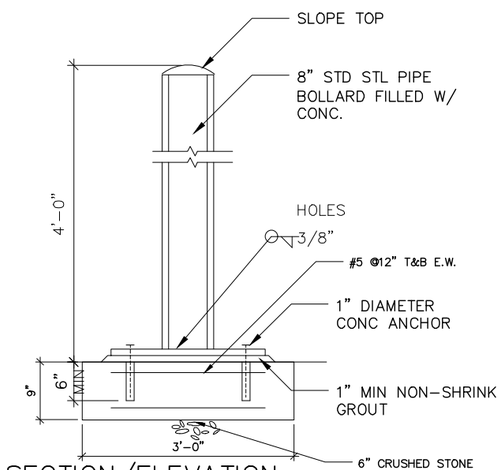

SECTION/ELEVATION
TYPCAL BOLLARD DETAIL MOUNT

SCALE: 3/4"=1'-0"

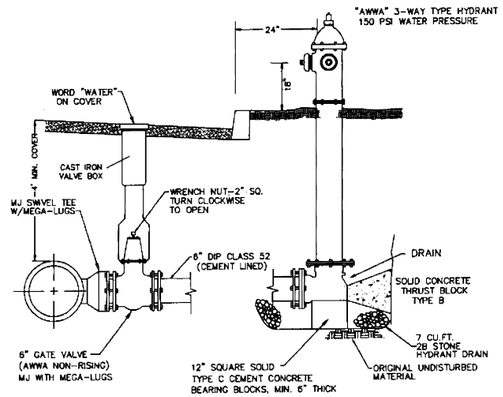

FIRE HYDRANT DETAIL

NOT TO SCALE

NOTES:

1. ALL JOINTS OR CONNECTIONS BETWEEN THE MAIN AND THE HYDRANT SHALL BE RESTRAINED.
2. USE TIE RODS FROM MAIN TO HYDRANT WHEN THRUST BLOCKING CAN NOT BE PLACED AGAINST UNDISTURBED EARTH.
3. TAP HYDRANT DRAIN OR WEEP HOLE WHEN INSTALLING HYDRANTS AND GROUND WATER ENCOUNTERED WITHIN 7-FEET OF FINISHED GRADE. DO NOT PLUG DRAIN HOLE UNLESS APPROVED BY W.M.W.A.

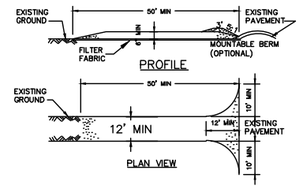

STABILIZED CONSTRUCTION ENTRANCE

NOT TO SCALE

CONSTRUCTION SPECIFICATIONS

1. CRUSHED STONE SIZE SHALL BE NYSDOT SIZE NO. 3 COARSE AGGREGATE FILL.
2. LENGTH – NOT LESS THAN 50 FEET.
3. THICKNESS – NOT LESS THAN SIX (6) INCHES.
4. WIDTH – TWELVE (12) FOOT MINIMUM, BUT NOT LESS THAN THE FULL WIDTH AT POINTS WHERE INGRESS VARIES OR EGRESS OCCURS. TWENTY-FOUR (24) FOOT IF SEE SINGLE ENTRANCE SITE.
5. FILTER CLOTH – WILL BE PLACED OVER THE ENTIRE AREA PRIOR TO PLACING OF STONE.
6. SURFACE WATER – ALL SURFACE WATER FLOWING OR DIVERTED TOWARD CONSTRUCTION ENTRANCES SHALL BE PIPED ACROSS THE ENTRANCE. IF PIPING IS IMPRACTICAL, A MOUNTABLE BERM WIT 5:1 SLOPES WILL BE PERMITTED.
7. MAINTENANCE – THE ENTRANCE SHALL BE MAINTAINED IN A CONDITION WHICH WILL PREVENT TRACKING OF FLOWING OF SEDIMENT ONTO PUBLIC RIGHTS-OF -WAY, ALL SEDIMENT SPILLED, DROPPED, WASHED OR TRACKED ONTO PUBLIC RIGHTS-OF-WAY MUST BE REMOVED IMMEDIATELY.
8. WHEN WASHING IS REQUIRED, IT SHALL BE DONE ON AN AREA STABILIZED WITH STONE AND WHICH DRAINS INTO AN APPROVED SEDIMENT TRAPPING DEVICE.
9. PERIODIC INSPECTION AND NEEDED MAINTENANCE SHALL BE PROVIDED AFTER EACH RAIN.

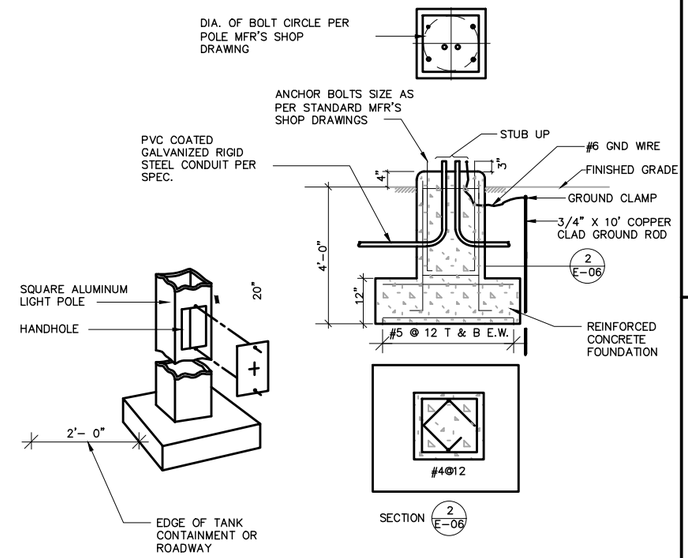

ROADWAY LIGHTING ASSEMBLY DETAILS

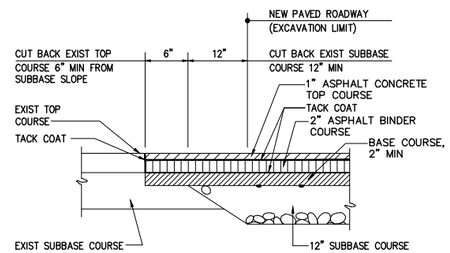

TYPICAL PAVEMENT RESTORATION

NOT TO SCALE

NOTES:

1. ASSUME EXISTING PAVEMENT WITH 3 INCHES OF SURFACE ASPHALT PAVEMENT WITH 4 INCH OF CRUSHED STONE AS SHOWN IN THE EXISTING ASPHALT DETAIL IN THIS SHEET.
2. BASE COURSE AND SUBGRADE IN FILL AREAS SHALL BE COMPACTED ACCORDING TO ASTM D-1557. IN CUT AREAS, ENGINEER'S REPRESENTATIVE SHALL DETERMINE IF SUBGRADE IS ACCEPTABLE WITH BEARING CAPACITY COMPARABLE TO SPECIFIED COMPACTION. IF NOT, EXISTING SUBGRADE SHALL BE REMOVED AND REPLACED WITH FILL AS PER ASTM D-1557.

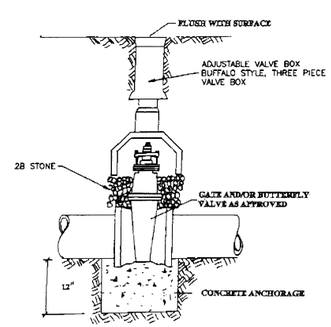

GATE VALVE DETAIL

NOT TO SCALE

NOTE:
1. VALVE AND PIPE SHALL HAVE SAME NOMINAL DIAMETER

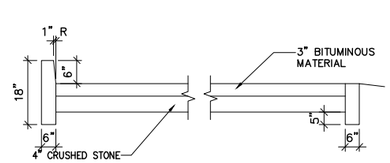

EXISTING ASPHALT DETAIL

NOT TO SCALE

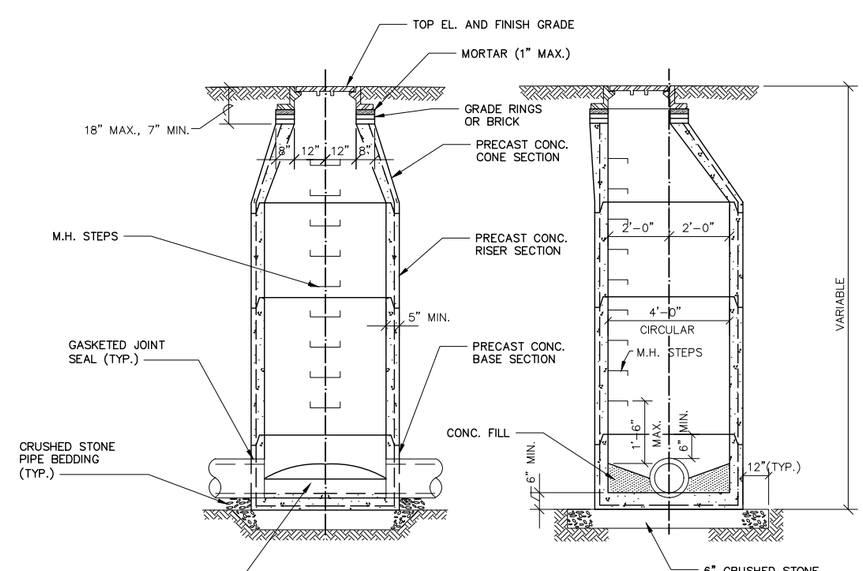

TYPICAL MANHOLE DETAIL

NOT TO SCALE

(FOR PIPE SEWER 8" THRU 21" DIAMETER)
(PRECAST CONCRETE SECTIONS)

Hazen ARCADIS
A JOINT VENTURE

LEGAL ENTITY:
ARCADIS CE, INC.

SEALS

NASSAU COUNTY, NEW YORK
DEPARTMENT OF PUBLIC WORKS

LONG BEACH WPCP CONSOLIDATION PUMP STATION CONVERSION

LONG BEACH WASTEWATER POLLUTION CONTROL PLANT

NO.	DATE	ISSUED FOR	BY

COPYRIGHT: 2017 HAZEN AND SAWYER/ ARCADIS A JOINT VENTURE

DATE:	JULY 2020
PROJECT NO.:	00726790.0001
FILE NAME:	C-12
DESIGNED BY:	L. JONES
DRAWN BY:	H. DAVE
CHECKED BY:	R. PENA-LANG

SHEET TITLE

CIVIL

DETAILS SHEET 2

SCALE: 1"=10'-0"

C-12

SHEET 31 OF 112

User:HDAVE Spec:AUS-NCSMOD File:F:\SHEETS\C-12.DWG Scale:1:1 SavedDate:7/21/2020 Time:09:59 Plot Date: Dave, Hetvi: 7/21/2020; 13:39 ; Layout:LAYOUT1

FIG. A

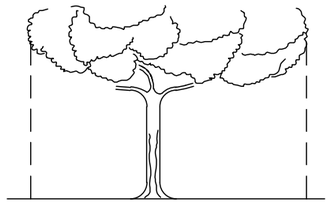

FIG. B

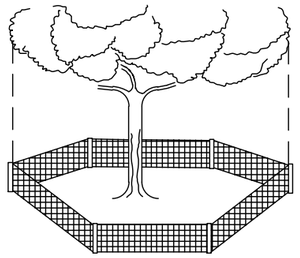

TREES – TO RESTRICT ACCESS INTO THE AREA WITHIN THE CANOPY DRIPLINE OF A TREE A PHYSICAL STRUCTURE NOT LESS THAN 3 FEED IN HEIGHT, COMPRISED OF WOOD OR OTHER SUITABLE MATERIAL, IS PLACED AROUND THE TREE AT THE CANOPY DRIPLINE, EXCEPT WHERE LAND ALTERATION OR CONSTRUCTION ACTIVITIES ARE APPROVED WITHIN THE CANOPY DRIPLINE.

THE CANOPY DRIPLINE OF A TREE IS THE IMAGINARY VERTICAL LINE THAT EXTENDS DOWNWARD FROM THE OUTERMOST TIPS OF THE TREE'S BRANCHES TO THE GROUND. FIG. A

BARRIER SPECIFICATION FOR TREES:

FOUR CORNER UPRIGHT STAKES OF NO LESS THAN 2"x2" LUMBER CONNECTED BY HORIZONTAL MEMBERS OF NO LESS THAN 1"x4" LUMBER; OR UPRIGHT STAKES SPACED AT 5' INTERVALS OF NO LESS THAN 2"x2" LUMBER CONNECTED BY SILT SCREEN FABRIC OR MATERIAL OF COMPARABLE DURABILITY. FIG. B

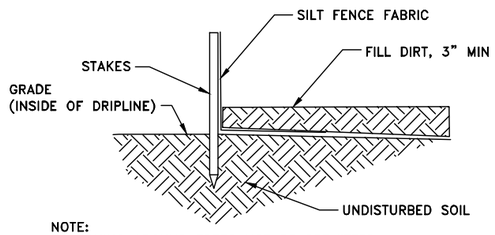

NOTE:
TRENCHING AROUND TREES NOT BE PREMITTED.
FOLD FABRIC AT GRADE AND COVER WITH A MINIMUM 3" OF FILL.

SILT FENCE INSTALLATION AROUND TREES

BARRIER SPECIFICATIONS FOR TREES

1. CONTRACTOR TO COMPLY WITH LOCAL TREE ORDINANCES IN ADDITION TO THE SPECIFICATION NOTED BELOW.
2. FOUR CORNER UPRIGHT STAKES A MINIMUM 2"x2" LUMBER CONNECTION BY HORIZONTAL MEMBERS A MINIMUM 1"x4" LUMBER; OR UPRIGHT STAKES SPACED AT 4–5' INTERVALS A MINIMUM 2"x2" LUMBER CONNECTED BY SILT FENCE WITH PLASTIC SURVEYING TAPE AT REGULAR INTERVALS. FIG. B.
3. TRUCKS OR HEAVY EQUIPMENT NOT ALLOWED WITHIN BARRIERS, ONLY HAND LABOR ALLOWED.
4. CONSTRUCTION MATERIALS, SOIL DEPOSITS, OR SOLVENTS SHALL NOT BE ALLOWED INSIDE BARRIERS.
5. BARRIERS ARE TO BE IN PLACE PRIOR TO CONSTRUCTION ACTIVITIES NEAR TREES.
6. BARRIERS TO REMAIN IN PLACE UNTIL PAVING, CONSTRUCTION, AND HEAVY EQUIPMENT ARE REMOVED FROM THE AREA.
7. FOR SINGULAR PALM TREES AND TREES FROM 1" TO 8" DBH.
8. TREES LARGER THAN 8" DBH AND TREE CLUSTERS THAT NEED BARRIERS.
9. ALL TREES TO REMAIN, MUST BE PROTECTED BY TREE PROTECTION BARRICADES MEETING THE MINIMUM STANDARDS SHOWN ON THE ATTACHED DIAGRAM. PROTECTIVE BARRICADES SHALL REMAIN IN PLACE UNTIL LAND ALTERATION AND CONSTRUCTION ACTIVITIES ARE COMPLETED.
10. INSTALL TREE BARRICADES TO THE FULLEST EXTENT OF THE DRIP LINE OF ALL TREES AS POSSIBLE AND / OR TO THE MAXIMUM LIMIT OF IMPROVEMENT(S) AS POSSIBLE (OF COURSE REALIZING THAT THE TREE BARRICADES MAY HAVE TO BE "BACKED OFF" THE IMPROVEMENT(S) BY 6" TO 2' MAXIMUM TO INSTALL THE IMPROVEMENT(S). DO NOT INSTALL TREE BARRICADES (SPECIFICALLY SILT FENCING MATERIAL) BY TRENCHING WITHIN THE DRIPLINE OF EXISTING TREES.

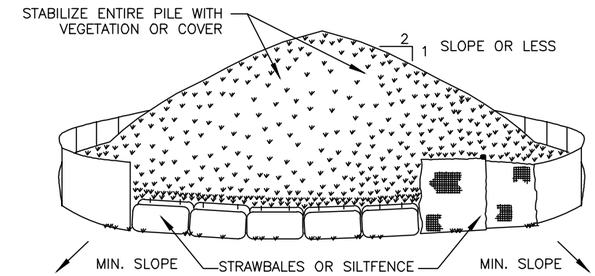

INSTALLATION NOTES:

1. AREA CHOSEN FOR STOCKPILING OPERATIONS SHALL BE DRY AND STABLE.
2. MAXIMUM SLOPE OF STOCKPILE SHALL BE 1:2.
3. UPON COMPLETION OF SOIL STOCKPILING, EACH PILE SHALL BE SURROUNDED WITH EITHER SILT FENCING OR STRAWBALES, THEN STABILIZED WITH VEGETATION OR COVERED.

SOIL STOCKPILING
NOT TO SCALE

TREE PROTECTION BARRIER DETAIL

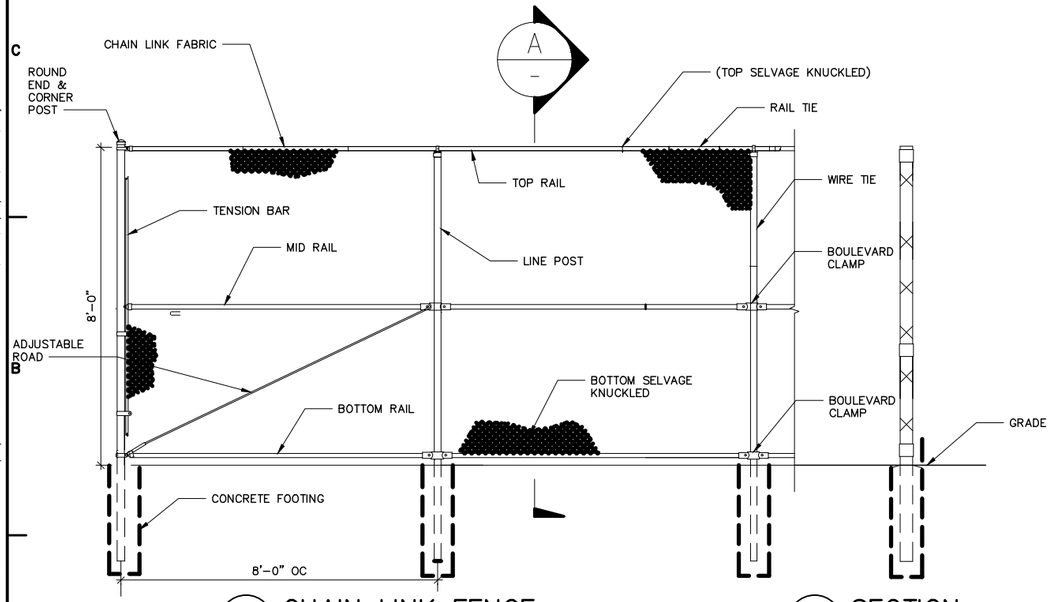

1 CHAIN LINK FENCE
SCALE: NTS

A SECTION
SCALE: NTS

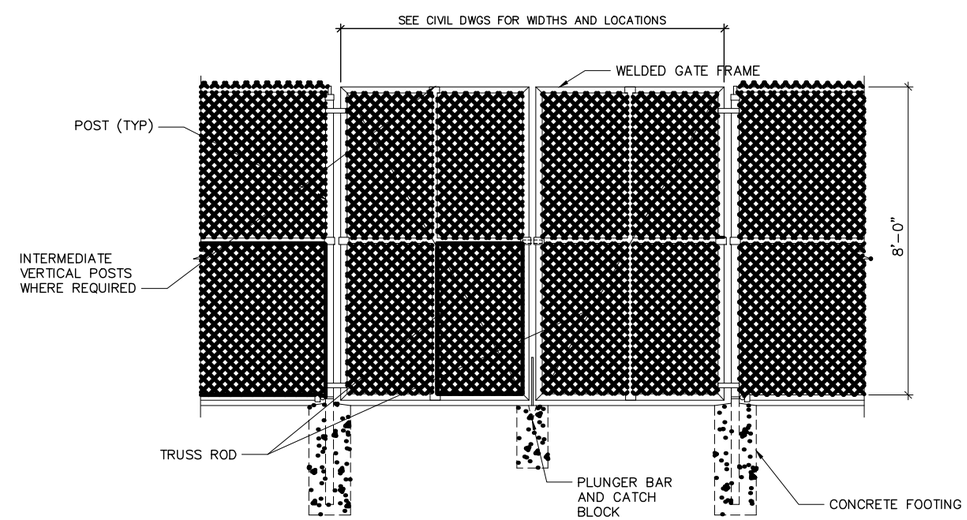

2 DOUBLE LEAF CHAIN LINK GATE
SCALE: NTS

Hazen ARCADIS
A JOINT VENTURE

LEGAL ENTITY:
ARCADIS CE, INC.

SEALS

NASSAU COUNTY, NEW YORK
DEPARTMENT OF PUBLIC WORKS

LONG BEACH WPCP CONSOLIDATION PUMP STATION CONVERSION

LONG BEACH WASTEWATER POLLUTION CONTROL PLANT

NO.	DATE	ISSUED FOR	BY

COPYRIGHT: 2017 HAZEN AND SAWYER/ ARCADIS A JOINT VENTURE

DATE: JULY 2020
PROJECT NO.: 00726790.0001
FILE NAME: C–13
DESIGNED BY: L. JONES
DRAWN BY: H. DAVE
CHECKED BY: R. PENA–LANG

SHEET TITLE
CIVIL

DETAILS SHEET 3

SCALE: 1"=10'–0"

C–13

SHEET 32 OF 112

User:HDAVE Spec:AUS-NCSMOD File:F:\SHEETS\C-13.DWG Scale:1:1 SavedDate:7/21/2020 Time:09:59 Plot Date: Dave, Hetvi; 7/21/2020; 13:39 ; Layout:LAYOUT1

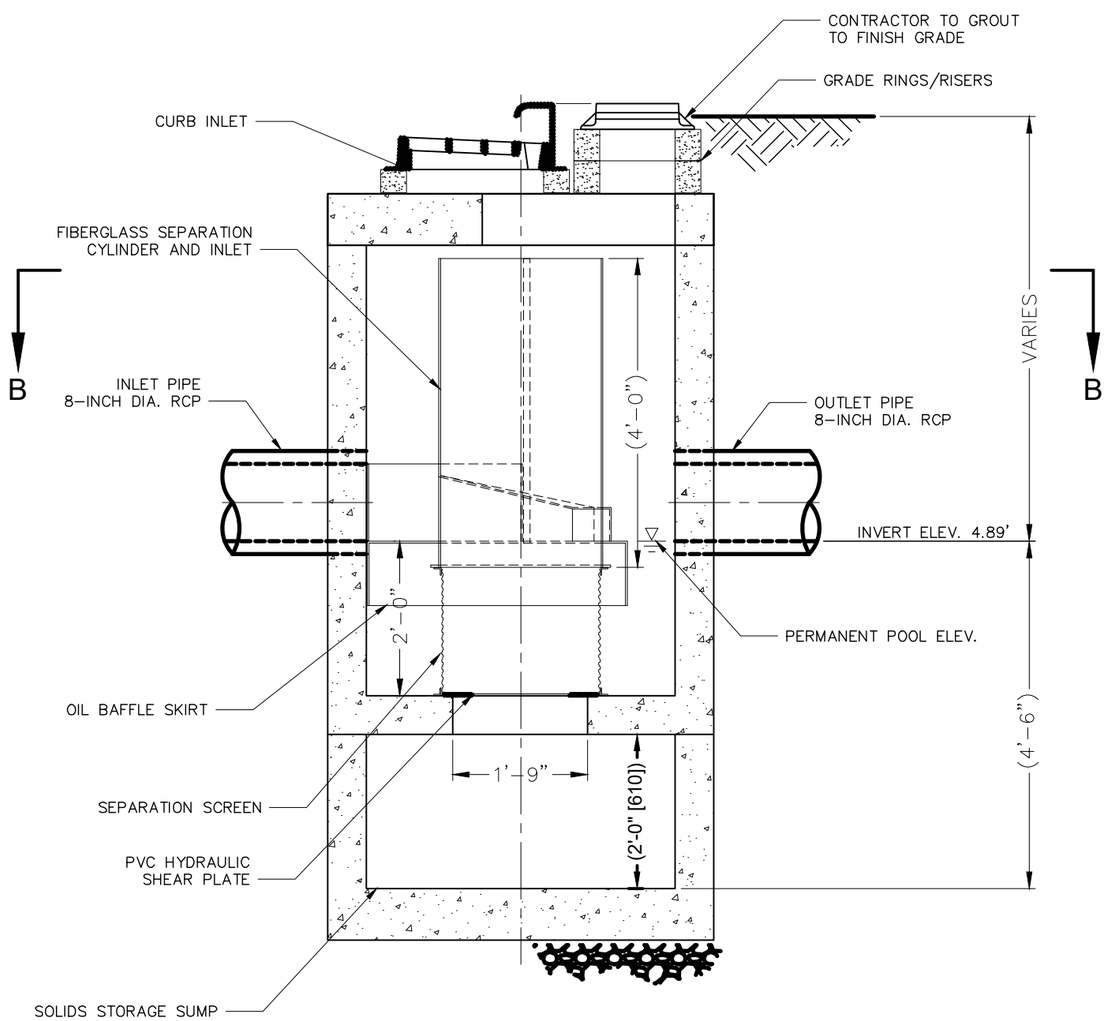

ELEVATION A-A

NOT TO SCALE

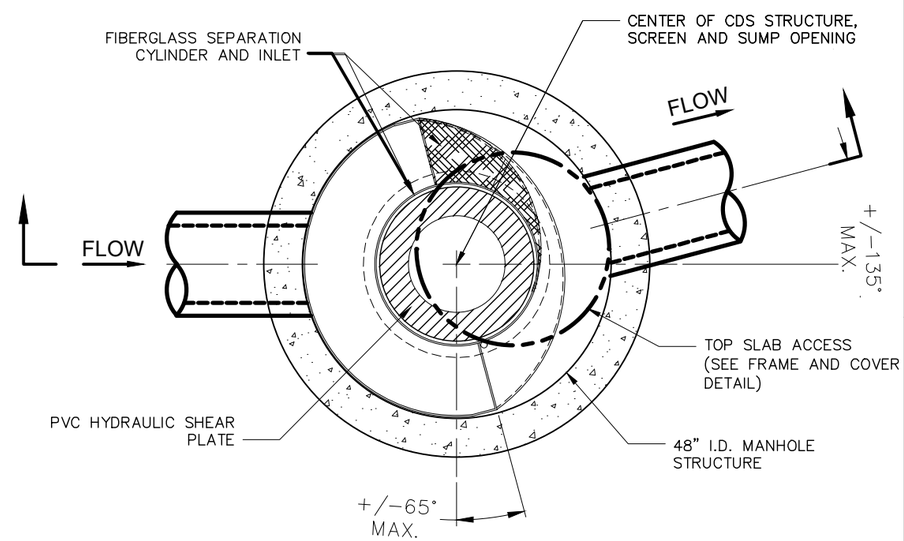

PLAN VIEW B-B

NOT TO SCALE

FRAME AND COVER

NOT TO SCALE

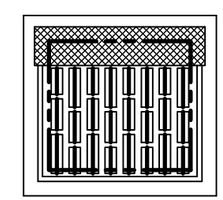

FRAME AND GRATE

NOT TO SCALE

CDS2015-4-C DESIGN NOTES
THE STANDARD CDS2015-4-C CONFIGURATION IS SHOWN. ALTERNATE CONFIGURATIONS ARE AVAILABLE AND ARE LISTED BELOW. SOME CONFIGURATIONS MAY BE COMBINED TO SUIT SITE REQUIREMENTS.
CONFIGURATION DESCRIPTION
CURB INLET WITH INLET PIPE OR PIPES

SITE SPECIFIC DATA REQUIREMENTS			
STRUCTURE ID			
WATER QUALITY FLOW RATE (CFS OR L/s)			0.5 CFS
PEAK FLOW RATE (CFS OR L/s)			2.0 CFS
RETURN PERIOD OF PEAK FLOW (YRS)			*
SCREEN APERTURE (2400 OR 4700)			2400
PIPE DATA:	I.E.	MATERIAL	DIAMETER
INLET PIPE 1	4.64	RCP	8-INCH
INLET PIPE 2	*	*	*
OUTLET PIPE	4.64	RCP	8-INCH
RIM ELEVATION			7.3
ANTI-FLOTATION BALLAST		WIDTH	HEIGHT
		*	*
NOTES/SPECIAL REQUIREMENTS:			
* PER ENGINEER OF RECORD			

GENERAL NOTES

1. CONTECH TO PROVIDE ALL MATERIALS UNLESS NOTED OTHERWISE.
2. DIMENSIONS MARKED WITH ( ) ARE REFERENCE DIMENSIONS. ACTUAL DIMENSIONS MAY VARY.
3. FOR FABRICATION DRAWINGS WITH DETAILED STRUCTURE DIMENSIONS AND WEIGHTS, PLEASE CONTACT YOUR CONTECH ENGINEERED SOLUTIONS LLC REPRESENTATIVE. www.contechES.com
4. CDS WATER QUALITY STRUCTURE SHALL BE IN ACCORDANCE WITH ALL DESIGN DATA AND INFORMATION CONTAINED IN THIS DRAWING.
5. STRUCTURE SHALL MEET AASHTO HS20 AND CASTINGS SHALL MEET HS20 (AASHTO M 306) LOAD RATING, ASSUMING GROUNDWATER ELEVATION AT, OR BELOW, THE OUTLET PIPE INVERT ELEVATION. ENGINEER OF RECORD TO CONFIRM ACTUAL GROUNDWATER ELEVATION.
6. PVC HYDRAULIC SHEAR PLATE IS PLACED ON SHELF AT BOTTOM OF SCREEN CYLINDER. REMOVE AND REPLACE AS NECESSARY DURING MAINTENANCE CLEANING.

INSTALLATION NOTES

7. ANY SUB-BASE, BACKFILL DEPTH, AND/OR ANTI-FLOTATION PROVISIONS ARE SITE-SPECIFIC DESIGN CONSIDERATIONS AND SHALL BE SPECIFIED BY ENGINEER OF RECORD.
8. CONTRACTOR TO PROVIDE EQUIPMENT WITH SUFFICIENT LIFTING AND REACH CAPACITY TO LIFT AND SET THE CDS MANHOLE STRUCTURE (LIFTING CLUTCHES PROVIDED).
9. CONTRACTOR TO ADD JOINT SEALANT BETWEEN ALL STRUCTURE SECTIONS, AND ASSEMBLE STRUCTURE.
10. CONTRACTOR TO PROVIDE, INSTALL, AND GROUT PIPES. MATCH PIPE INVERTS WITH ELEVATIONS SHOWN.
11. CONTRACTOR TO TAKE APPROPRIATE MEASURES TO ASSURE UNIT IS WATER TIGHT, HOLDING WATER TO FLOWLINE INVERT MINIMUM. IT IS SUGGESTED THAT ALL JOINTS BELOW PIPE INVERTS ARE GROUTED.

Hazen ARCADIS
A JOINT VENTURE

LEGAL ENTITY:
ARCADIS CE, INC.

SEALS

NASSAU COUNTY, NEW YORK
DEPARTMENT OF PUBLIC WORKS

LONG BEACH WPCP CONSOLIDATION PUMP STATION CONVERSION

LONG BEACH WASTEWATER POLLUTION CONTROL PLANT

NO.	DATE	ISSUED FOR	BY

COPYRIGHT: 2017 HAZEN AND SAWYER/ ARCADIS A JOINT VENTURE

DATE: JULY 2020
PROJECT NO.: 00726790.0001
FILE NAME: C-14
DESIGNED BY: L. JONES
DRAWN BY: H. DAVE
CHECKED BY: R. PENA-LANG

SHEET TITLE

CIVIL

INLINE CDS DETAIL

SCALE: 1"=10'-0"

C-14

SHEET 33 OF 112

User:HDAVE Spec:AUS-NCSMOD File:F:\SHEETS\C-14.DWG Scale:1:1 SavedDate:7/21/2020 Time:09:59 Plot Date: Dave, Hetvi: 7/21/2020; 13:40 ; Layout:LAYOUT1

Hazen ARCADIS
A JOINT VENTURE

LEGAL ENTITY:
ARCADIS CE, INC.

SEALS

GENERAL

G-1 THESE NOTES ARE GENERAL AND SUPPLEMENTAL TO THE SPECIFICATIONS AND APPLY TO THE ENTIRE PROJECT UNLESS MODIFIED OR NOTED OTHERWISE IN THE CONTRACT DOCUMENTS.

G-2 STANDARD DETAILS, SHOWN ON DRAWINGS S-19 THROUGH S-25, SHALL BE USED WHEN REFERRED TO, UNLESS LESS RESTRICTIVE OR DIFFERENT DETAILS ARE SHOWN ON DRAWINGS.

G-3 DESIGN IS IN ACCORDANCE WITH AND CONSTRUCTION SHALL COMPLY WITH THE PROVISIONS OF THE 2015 NEW YORK STATE BUILDING CODE, EXCEPT WHERE OTHER APPLICABLE CODES AND THE CONTRACT DOCUMENTS ARE MORE RESTRICTIVE.

G-4 LIVE LOADS: AS SHOWN ON DRAWINGS.

G-5 ROOF SNOW LOAD:

1. GROUND SNOW LOAD, Pg = 25 PSF
2. FLAT-ROOF SNOW LOAD, Pf = 22 PSF
3. SNOW EXPOSURE FACTOR, Ce = 0.9
4. SNOW IMPORTANCE FACTOR, IS = 1.10
5. THERMAL FACTOR, Ct = 1.1

G-6 SEISMIC DESIGN DATA:

1. SEISMIC IMPORTANCE FACTOR, IE = 1.25
2. RISK CATEGORY = III
3. MAPPED SPECTRAL RESPONSE ACCELERATIONS:
   A) Ss = 24.2%
   B) Sl = 6.6%
4. SITE CLASS = D
5. SPECTRAL RESPONSE COEFFICIENTS:
   A) Sds = 25.8%
   B) Sd1 = 10.6%
6. SEISMIC DESIGN CATEGORY = B
7. BASIC SEISMIC FORCE RESISTING SYSTEM = ORDINARY REINFORCED CONCRETE MOMENT FRAME
8. BASE SHEAR = 7.53% XW
9. RESPONSE MODIFICATION FACTOR = 3
10. ANALYSIS PROCEDURE = SECTION 12.8

G-7 WIND DESIGN DATA:

1. ULTIMATE DESIGN WIND SPEED = 134 MPH
2. NOMINAL DESIGN WIND SPEED = 104 MPH
3. RISK CATEGORY = III
4. WIND EXPOSURE = C
5. APPLICABLE INTERNAL PRESSURE COEFFICIENT:
   A) ENCLOSED = ±0.18

G-8 ALL DIMENSIONS INDICATED (*) ARE TO BE VERIFIED EITHER BY FIELD MEASUREMENTS FOR EXISTING STRUCTURES OR BY SHOP DRAWINGS FOR EQUIPMENT FURNISHED. STRUCTURAL DIMENSIONS NOT SHOWN BUT CONTROLLED BY OR RELATED TO EQUIPMENT SHALL BE VERIFIED BY THE CONTRACTOR WITH THE MANUFACTURER PRIOR TO CONSTRUCTION.

G-9 EQUIPMENT ANCHOR BOLT SIZES, TYPES, AND PATTERNS SHALL BE AS REQUIRED BY THE APPROVED EQUIPMENT MANUFACTURER. ALL BOLT PATTERNS SHALL BE TEMPLATED TO ENSURE ACCURACY OF PLACEMENT.

G-10 STRUCTURAL DRAWINGS SHALL BE USED IN COORDINATION WITH DRAWINGS OF ALL OTHER DISCIPLINES AND MANUFACTURER'S SHOP DRAWINGS.

G-11 IF A CONFLICT IS FOUND BETWEEN DIFFERENT PORTIONS OF THE CONTRACT DOCUMENTS, THE CONTRACTOR SHALL NOTIFY THE OWNER IMMEDIATELY. CONTINUED CONSTRUCTION OF THE AREA IN CONFLICT SHALL BE AT THE CONTRACTOR'S OWN RISK UNTIL THE CONFLICT IS RESOLVED BY THE OWNER.

G-12 STRUCTURES HAVE BEEN DESIGNED FOR OPERATIONAL LOADS ON THE COMPLETED STRUCTURE. DURING CONSTRUCTION, THE STRUCTURES SHALL BE PROTECTED BY BRACING AND TEMPORARY SUPPORTS WHEREVER EXCESSIVE CONSTRUCTION LOADS MAY OCCUR. OVERSTRESSING OF ANY STRUCTURAL ELEMENT IS PROHIBITED.

G-13 NO BACKFILL SHALL BE PLACED AGAINST ANY WALL UNLESS ALL SUPPORTING ELEMENTS OF THE STRUCTURE HAVE BEEN CONSTRUCTED AND HAVE REACHED THE SPECIFIED MINIMUM CONCRETE STRENGTH.

G-14 DO NOT SCALE THESE DRAWINGS, USE DIMENSIONS.

G-15 CONTRACTOR'S CONSTRUCTION AND/OR ERECTION SEQUENCES SHALL RECOGNIZE AND CONSIDER THE EFFECTS OF THERMAL MOVEMENTS OF STRUCTURAL ELEMENTS DURING THE CONSTRUCTION PERIOD.

G-16 WHERE CONNECTIONS TO OR MODIFICATIONS OF EXISTING STRUCTURES ARE SHOWN, EXISTING FOUNDATIONS, WALLS, COLUMNS, SLABS, BEAMS, FLOORS AND DECKS, (CONCRETE, STEEL, TIMBER, ETC.) ARE ASSUMED TO BE IN GOOD CONDITION. THIS MUST BE VERIFIED IN THE FIELD BY THE CONTRACTOR. UNSOUND CONDITIONS SHALL BE REPORTED TO THE OWNER/ENGINEER. ALL UNSOUND STRUCTURAL ELEMENTS SHALL BE REPAIRED TO SOUND CONDITION AS APPROVED BY THE OWNER/ENGINEER. EXISTING CONSTRUCTION DIMENSIONS SHALL BE VERIFIED BY THE GENERAL CONTRACTOR BEFORE WORK COMMENCES. VARIATIONS FROM DIMENSIONS SHOWN ON THESE DRAWINGS SHALL BE REPORTED TO THE OWNER/ENGINEER.

G-17 NO COLD OR HOT WEATHER CONSTRUCTION, AS DEFINED IN SPECIFICATION SECTION 03300, IS PERMITTED WITHOUT WRITTEN APPROVAL FROM THE OWNER.

G-18 FOR SIZES AND LOCATIONS OF EQUIPMENT SUPPORTS AND PIPE OPENINGS, SEE OTHER DISCIPLINE DRAWINGS. OPENING SIZES LESS THAN 12" ARE NOT SHOWN ON STRUCTURAL DRAWINGS, REFERENCE OTHER DISCIPLINE DRAWINGS FOR LOCATIONS.

G-19 THE CONTRACTOR SHALL SUBMIT COMPOSITE DRAWINGS INDICATING ALL FLOOR AND WALL OPENINGS AND PENETRATIONS THROUGH STRUCTURAL MEMBERS REQUIRED TO ACCOMMODATE THE HVAC, PLUMBING AND ELECTRICAL WORK. THE CONTRACTOR SHALL FOLLOW THE TYPICAL FRAMING DETAILS AT OPENINGS AND REINFORCEMENT DETAILS AT PENETRATIONS THROUGH STRUCTURAL MEMBERS SHOWN ON DWG S-13. ACCORDINGLY, THE CONTRACTOR SHALL SUBMIT SHOP DETAILS FOR REVIEW.

G-20 ALL GRATING AND COVER PLATES TO BE ALUMINUM (UON).

G-21 DIMENSIONS AND DETAILS OF EXISTING STRUCTURES ARE BASED ON CONTRACT NO. 1 AS-BUILTS DATED AUGUST 1950.

FOUNDATIONS

F-1 DESIGN ASSUMPTIONS:

1. ALLOWABLE BEARING PRESSURE = SEE GEOTECHNICAL REPORT
2. GROUNDWATER:
   A) NORMAL GROUNDWATER ELEVATION = 8 FT B.G.S.
   B) 100-YEAR FLOOD ELEVATION = 14.00
   C) 500-YEAR FLOOD ELEVATION = 19.40

F-2 CONCRETE GENERAL NOTES APPLY TO FOUNDATIONS.

F-3 MINIMUM REQUIRED DEPTH FROM ADJACENT FINISHED GRADE TO BOTTOM OF FOUNDATION IS 4'-0" (UON).

F-4 FOR FOUNDATION DESIGN CRITERIA REFER TO GEOTECHNICAL STUDY PERFORMED BY ARCADIS, DATED JULY 2, 2020.

CONCRETE

C-1 CONCRETE 28-DAY COMPRESSIVE STRENGTH:

1. CLASS A – 4500 PSI – ALL CONCRETE UON
2. CLASS B – 3000 PSI

C-2 REINFORCEMENT: ASTM A615, GRADE 60.

C-3 CONCRETE COVER FOR REINFORCING:

1. SURFACES CAST AGAINST SUBGRADE 3"
2. TOP SURFACES OF SLABS WHERE PVC WATERSTOP IS REQUIRED IN WALLS 3"
3. FORMED SURFACES IN CONTACT WITH WEATHER, SOIL, OR LIQUID 2"
4. BOTTOM SURFACES OF SLABS OVER LIQUID 2"
5. SURFACES NOT IN CONTACT WITH WEATHER, SOIL, OR LIQUID 1 1/2"

C-4 CONSTRUCTION JOINTS SHALL BE LOCATED AS SHOWN ON THE DRAWINGS. WHERE NOT SHOWN, CONSTRUCTION JOINTS SHALL BE LOCATED AS REQUIRED BY THE SPECIFICATIONS. CONSTRUCTION JOINT TYPES AND LOCATIONS SHALL BE AS APPROVED BY THE ENGINEER.

C-5 WHERE HORIZONTAL CONSTRUCTION JOINTS, LOCATED ABOVE THE FOUNDATION SLAB, EXTEND BEYOND WHERE NEEDED, TERMINATE AT A VERTICAL CONSTRUCTION JOINT AS APPROVED BY THE ENGINEER.

C-6 EQUIPMENT SUPPORTS, ANCHORAGES, OPENINGS, RECESSES AND REVEALS NOT SHOWN ON THE STRUCTURAL DRAWINGS BUT REQUIRED BY OTHER CONTRACT DOCUMENTS, SHALL BE PROVIDED FOR PRIOR TO PLACING CONCRETE.

C-7 AT ALL TYPICAL CURBS, EQUIPMENT PADS, AND PIPE SUPPORT PIERS, REINFORCING DOWELS SHOWN MAY BE REPLACED WITH MATCHING DOWELS SET IN EPOXY IN DRILLED HOLES AS SPECIFIED. DOWELS LOCATED CLOSER THAN 3 INCHES FROM ANY EDGE OF CONCRETE SHALL NOT BE REPLACED WITH DRILLED DOWELS.

C-8 WHERE DRILLED EPOXY DOWELS ARE PLACED INTO HARDENED CONCRETE, ADJUST THE DOWEL LOCATIONS AS NEEDED TO AVOID DRILLING THROUGH ANY REINFORCING BARS. IF THE DOWEL LOCATION NEEDS TO BE MODIFIED, CONTACT THE ENGINEER BEFORE PROCEEDING.

C-9 DOWELS, ANCHOR BOLTS, PIPES, AND OTHER EMBEDDED ITEMS SHALL BE HELD SECURELY IN POSITION WHILE CONCRETE IS BEING PLACED.

C-10 CONDUITS AND PIPES EMBEDDED IN OR PENETRATING THROUGH CONCRETE SHALL BE SPACED ON CENTER NOT LESS THAN 3 TIMES THEIR OUTSIDE DIMENSION, BUT NOT LESS THAN 2 1/2 INCHES CLEAR. OUTSIDE DIMENSION OF EMBEDDED ITEMS SHALL NOT EXCEED 1/3 OF THE CONCRETE MEMBER THICKNESS. CLEAR SPACING REQUIREMENTS SHALL APPLY FOR EMBEDDED CONDUITS OR PIPES CROSSING AT AN ANGLE LESS THAN 60 DEGREES.

C-11 WHEN MULTIPLE EMBEDDED ITEMS ARE WITHIN THE SAME CROSS SECTION OF A MEMBER, THE SUM OF THE OUTSIDE TO OUTSIDE DIMENSIONS OF ANY CONCRETE BETWEEN THE EMBEDDED ITEMS SHALL NOT EXCEED 1/3 OF THE CONCRETE MEMBER THICKNESS.

C-12 EMBEDDED CONDUITS AND PIPES SHALL BE LOCATED BETWEEN THE LAYERS OF REINFORCEMENT AND A MINIMUM OF 2 1/2 INCHES CLEAR FROM APPROXIMATELY PARALLEL REINFORCING BARS. REQUIREMENTS FOR EMBEDDED ELEMENTS CROSSING REINFORCING BARS SHALL BE AS REQUIRED FOR CROSSING EMBEDDED ELEMENTS.

C-13 CONDUITS AND PIPES SHALL NOT BE EMBEDDED IN OR PASS THROUGH COLUMNS OR BEAMS UNLESS INDICATED OTHERWISE OR AUTHORIZED BY OWNER.

C-14 REINFORCING BARS AND ACCESSORIES SHALL NOT BE IN CONTACT WITH ANY METAL PIPE, PIPE FLANGE, METAL CONDUIT, OR OTHER METAL PARTS EMBEDDED IN CONCRETE. A MINIMUM CLEARANCE OF 2 INCHES SHALL BE PROVIDED.

C-15 CONTRACTOR SHALL PROVIDE 3/4 INCH CHAMFER USING WOOD CHAMFER STRIPS ON ALL EXPOSED CORNERS OF COLUMNS, BEAMS AND WALLS OR AS REQUIRED TO MATCH EXISTING CONDITIONS.

C-16 LAP SPLICES SHALL BE IN ACCORDANCE WITH THE TABLE SHOWN ON TYPICAL DETAILS DRAWING.

C-17 PROVIDE ADDITIONAL REINFORCEMENT AT OPENINGS AND WALL INTERSECTIONS AS SHOWN ON TYPICAL DETAILS (UON).

C-18 PROVIDE WATERSTOPS IN ALL FOUNDATIONS, TANKS AND OTHER SUBSTRUCTURES UP TO AN ELEVATION AT LEAST 12 INCHES ABOVE GRADE OR TO AN ELEVATION AT LEAST 12 INCHES ABOVE LIQUID LEVEL IN TANKS, WHICHEVER IS HIGHER, WHETHER SHOWN OR NOT.

SPECIAL INSPECTION

I-1 THE FOLLOWING ITEMS SHALL BE SUBJECT TO SPECIAL INSPECTION, MADE AND WITNESSED BY OR UNDER THE DIRECTION OF A LICENSED PROFESSIONAL ENGINEER. TEST REPORTS, CERTIFICATES OF INSPECTION SHALL BE PREPARED AND FILED WITH THE DEPARTMENT OF BUILDINGS:

1. SHORING, BRACING, STRUCTURAL STABILITY
2. CONCRETE INSPECTION PER BUILDING CODE CHAPTER 17
3. CONCRETE ANCHORS AND ANCHOR BOLTS
4. SUBGRADE COMPACTION
5. STRUCTURAL STEEL INSPECTION PER BUILDING CODE CHAPTER 17
6. PILE INSPECTION
7. PROPORTIONS OF SITE-MIXED GROUT
8. GROUT SPACING PRIOR TO GROUTING
9. PREPARATION OF GROUT SPECIMEN
10. GRADE, SIZE AND QUANTITY OF REINFORCEMENT

I-2 THE DESIGNATED INSPECTING AGENCY FOR SPECIAL INSPECTION SHALL PERFORM ON SITE INSPECTION IN ACCORDANCE WITH REGULATIONS UNDER THE SUPERVISION OF A PROFESSIONAL ENGINEER LICENSED IN THE STATE OF NEW YORK.

I-3 THE DESIGNATED INSPECTING AGENCY IS RESPONSIBLE FOR ALL REQUIRED TESTING AND INSPECTION (INCLUDING SPECIAL INSPECTION). THE SPECIAL INSPECTION ENGINEERS ARE RESPONSIBLE FOR FILING AND OBTAINING APPROVAL OF ALL STATEMENTS, TEST AND INSPECTION REPORTS, INCLUDING STEEL AND CONCRETE PRODUCER'S CERTIFICATES.

I-4 CONTRACTOR TO NOTIFY THE SPECIAL INSPECTION ENGINEERS AT LEAST 48 HOURS PRIOR TO START OF WORK.

STRUCTURAL METALS

S-1 DETAIL, FABRICATE, AND ERECT STRUCTURAL STEEL IN ACCORDANCE WITH AISC SPECIFICATION FOR STRUCTURAL STEEL BUILDINGS, 2016 EDITION.

S-2 STEEL MATERIAL:

1. STRUCTURAL TUBING, ASTM A 500, GRADE C
2. STRUCTURAL PIPE, ASTM A 53, GRADE B
3. W SHAPES, ASTM A992.
4. STRUCTURAL CHANNELS, ASTM A 572.
5. ALL OTHER SHAPES AND PLATES, ASTM A 572 (UON)

S-3 PROVIDE MIN. 3/4" DIAMETER ASTM A 325 TYPE X HIGH STRENGTH BOLTS, FULLY TIGHTENED CONNECTIONS.

S-4 PROVIDE TYPICAL STEEL BEAM CONNECTIONS FOR A CAPACITY OF NOT LESS THAN THE TOTAL UNIFORM LOAD CAPACITY TABULATED IN THE AISC TABLES FOR ALLOWABLE LOADS OF BEAMS.

S-5 DO NOT PAINT STEEL SURFACES WHICH ARE TO BE WELDED OR ENCASED IN CONCRETE.

S-6 ALL GROOVE AND BUTT WELDS SHALL BE FULL PENETRATION UON.

S-7 FILLET WELD SIZES SHALL BE THE MINIMUM SIZE REQUIRED BY AISC CODE FOR PLATE SIZES TO BE CONNECTED AND SHALL BE APPLIED TO THE ENTIRE JOINT CONTACT LENGTH, BUT NOT LESS THAN 3/16 INCH.

S-8 STAINLESS STEEL SHALL BE TYPE 316L-ASTM A276.

S-9 STAINLESS STEEL TYPE 316L SHALL BE USED IN ALL AREAS TO BE SUBMERGED AND AS SHOWN ON DWGS.

S-10 IF STAINLESS STEEL MEMBERS ARE NOT AVAILABLE, CONTRACTOR SHALL PROVIDE EQUIVALENT STAINLESS STEEL SECTIONS BUILT UP OUT OF STAINLESS STEEL PLATES.

S-11 ALL BOLTS, ANCHOR BOLTS, AND CONCRETE ANCHORS CONNECTING STAINLESS STEEL SHALL BE TYPE 316 STAINLESS STEEL.

S-12 WHENEVER ONE MEMBER IS FASTENED TO ANOTHER WITH FASTENINGS (BOLTS, WELDS, ETC.) SET AT A UNIFORM SPACING, THERE SHALL BE A MINIMUM OF TWO FASTENINGS PER PIECE CONNECTED AND THE FIRST AND LAST FASTENINGS SHALL BE LOCATED NOT TO EXCEED 1/4 SPACE FROM EACH END.

FLOOD CRITERIA

FC-1 FLOOD LOADING BASED ON STRUCTURAL OCCUPANCY CATEGORY III.

FC-2 LOAD COMBINATIONS ARE BASED ON THE NEW YORK STATE BUILDING CODE AND ASCE 7 PROVISIONS, SPECIFICALLY SECTION 2.3.3 CONCERNING VERTICAL FLOOD WALLS, BARRIERS AND THEIR SUPPORTS RESISTING FLOOD WAVES ARE DESIGNED USING THE 1.0 Fa LOAD FACTOR ASSOCIATED WITH NONCOASTAL A-ZONES.

FC-3 THE ELEVATIONS OF THE BOTTOM OF THE LOWEST HORIZONTAL STRUCTURAL MEMBER OF THE CONCRETE STRUCTURES IS AT THE CORRESPONDING DESIGN FLOOD ELEVATION (DFE) WHICH IS AS FOLLOWS:

DESIGN FLOOD ELEVATION: 19.4 FT
1. 100 YR STILL WATER: 10.4 FT
2. 500 YR STILL WATER: 14 FT
3. WAVE HEIGHT: 2.9 FT
4. SEA LEVEL RISE (SLR): 2.5 FT

ELEVATIONS REFER TO NORTH AMERICAN VERTICAL DATUM 1988 (NAVD88)

FC-4 IMPACT FORCE 20 KIPS

ABBREVIATIONS

AB	ANCHOR BOLTS	ID	INSIDE DIAMETER
ADD'L	ADDITIONAL	IF	INSIDE FACE
AL	ALUMINUM	INV	INVERT
ALT	ALTERNATE	JT	JOINT
ANCH	ANCHOR	KO	KNOCK OUT
APPROX	APPROXIMATE	L	ANGLE (STRUCTURAL SHAPE)
A	ARCHITECTURAL	LG	LONG
BAL	BALANCE	LL	LIVE LOAD
BET	BETWEEN	LLH	LONG LEG HORIZ
BL	BUILDING LINE	LLV	LONG LEG VERT
BLDG	BUILDING	LOC	LOCATION
BLK	BLOCK	LP	LOW POINT
BM	BEAM	LW	LONG WAY
BOT	BOTTOM	MAS	MASONRY
BRG	BEARING	MTCH	MATCH/MATCHING
C	CHANNEL STRUCTURAL SHAPE	MAX	MAXIMUM
CANT'L	CANTILEVER	MECH	MECHANICAL
CJ	CONSTRUCTION JOINT	MEZZ	MEZZANINE
CL	CLEAR	MFR	MANUFACTURE, MANUFACTURER
CMU	CONCRETE MASONRY UNIT	MH	MANHOLE
COL	COLUMN	MID	MIDDLE
COMP	COMPRESSIBLE	MIN	MINIMUM
CONC	CONCRETE	N	NORTH
CONN	CONNECTION	NF	NEAR FACE
CONST	CONSTRUCTION	#	NUMBER
CONT	CONTINUOUS	NTS	NOT TO SCALE
CSTG	CASTING	OC	ON CENTER
C/C	CENTER TO CENTER	OD	OUTSIDE DIAMETER
CTR	CENTER	OF	OUTSIDE FACE
DET	DETAIL	OPNG	OPENING
DIA	DIAMETER	OPP	OPPOSITE
DIAG	DIAGONAL	PC	PRECAST CONCRETE
DIM	DIMENSION	PCO	PILE CUT OFF
DL	DEAD LOAD	PL	PLATE
DN	DOWN	PSF	POUNDS PER SQUARE FOOT
DO	DITTO	PVC	POLYVINYL CHLORIDE
DP	DEEP	R	RISER
DWG	DRAWING	RAD	RADIUS
DWL	DOWEL	RD	ROOF DRAIN
E	EAST	REINF	REINFORCEMENT
EA	EACH	REQD	REQUIRED
EF	EACH FACE	RM	ROOM
EJ	EXPANSION JOINT	RO	ROUGH OPENING
EL	ELEVATION	S	SOUTH
ELEC	ELECTRICAL	SECT	SECTION
EMB	EMBEDMENT	SHT	SHEET
ENCL	ENCLOSURE	SIM	SIMILAR
EQ	EQUAL	SL	SLAB
EQUIP	EQUIPMENT	SP	SPIRAL
ES	EACH SIDE	SPA	SPACING
EW	EACH WAY	SPEC	SPECIFICATION
EW T&B	EACH WAY TOP & BOTTOM	SQ	SQUARE
EXIST	EXISTING	SST	STAINLESS STEEL
EXP	EXPANSION	STD	STANDARD
EXT	EXTERIOR	STIR	STIRRUP
FB	FLOOR BEAM	STL	STEEL
FD	FLOOR DRAIN	STRUCT	STRUCTURAL
FDN	FOUNDATION	SW	SHORT WAY
FF	FAR FACE	T&B	TOP AND BOTTOM
FIN	FINISH	TOC	TOP OF CONCRETE
FL	FLOOR	THK	THICK
FTG	FOOTING	T/	TOP OF
GA	GAUGE	T	TREAD
GALV	GALVANIZE	TYP	TYPICAL
GB	GRADE BEAM	UON	UNLESS OTHERWISE NOTED
GR	GRADE	VERT	VERTICAL
GRTG	GRATING	W	WEST
H	HIGH	WF	WIDE FLANGE STRUCTURAL SHAPE, WIDTH, WEST
HT	HEIGHT	W/	WITH
HORIZ	HORIZONTAL	WP	WORKING POINT
HP	HIGH POINT	WS	WATERSTOP
HS	HIGH STRENGTH		
HVAC	HEATING, VENTILATING & AIR CONDITIONING		

NASSAU COUNTY, NEW YORK
DEPARTMENT OF PUBLIC WORKS

LONG BEACH WPCP CONSOLIDATION PUMP STATION CONVERSION

LONG BEACH WASTEWATER POLLUTION CONTROL PLANT

NO.	DATE	ISSUED FOR	BY

COPYRIGHT: 2017 HAZEN AND SAWYER/ ARCADIS A JOINT VENTURE

DATE: JULY 2020
PROJECT NO.: 00726790.0001
FILE NAME: S-01
DESIGNED BY: C. BROADBENT
DRAWN BY: Z. SANGALANG
CHECKED BY: M. VERMA

SHEET TITLE
STRUCTURAL
GENERAL NOTES AND ABBREVIATIONS

SCALE: NTS

S-01

SHEET 34 OF 112

User:SANGALANG Spec:AUS-NCSMOD File:I:\ACAD\PROJ\00726790.0001\SHEETS\S-01.DWG Scale:1:1 SavedDate:7/15/2020 Time:08:14 Plot Date: Sangalang, Zosimo; 7/17/2020; 14:31 ; Layout:LAYOUT1

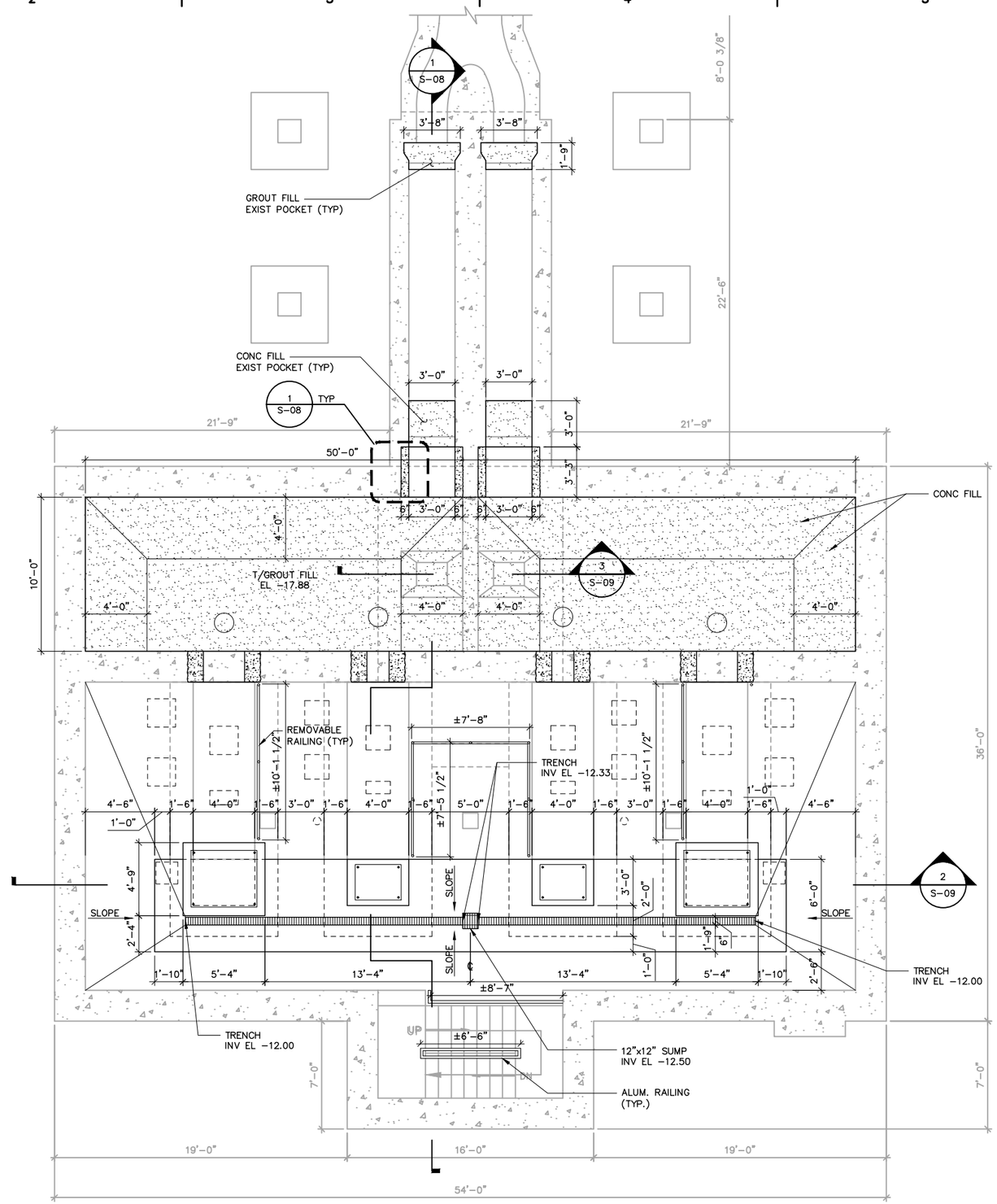

FOUNDATION PLAN AT EL -9.80

SCALE: 1/4" = 1'-0"

0 2' 4' 8'

NOTES:

1. LIVE LOAD = 100 PSF
2. REFER TO STANDARD DETAILS, SHOWN ON DWG S-19 THROUGH S-25 FOR ADDITIONAL DETAILS.
3. CONTRACTOR IS RESPONSIBLE FOR PROVIDING ALL NECESSARY DEWATERING MEASURES AND FOR ANY SHEETING THAT MAY BE NEEDED DURING CONSTRUCTION.

Hazen ARCADIS
A JOINT VENTURE

LEGAL ENTITY:
ARCADIS CE, INC.

SEALS

STATE OF NEW YORK
MANAL VERMA
LICENSED PROFESSIONAL ENGINEER

NASSAU COUNTY, NEW YORK
DEPARTMENT OF PUBLIC WORKS

LONG BEACH WPCP CONSOLIDATION
PUMP STATION CONVERSION

LONG BEACH WASTEWATER POLLUTION CONTROL PLANT

NO.	DATE	ISSUED FOR	BY

COPYRIGHT: 2017 HAZEN AND SAWYER/ ARCADIS A JOINT VENTURE

DATE:	JULY 2020
PROJECT NO.:	00726790.0001
FILE NAME:	S-02
DESIGNED BY:	M. ESTRADA
DRAWN BY:	Z. SANGALANG
CHECKED BY:	M. VERMA

SHEET TITLE

STRUCTURAL

PUMP STATION FOUNDATION PLAN AT EL -9.80

SCALE: 1/4" = 1'-0"

S-02

SHEET 35 OF 112

User:SANGALANG Spec:AUS-NCSMOD File:I:\ACAD\PROJ\00726790.0001\SHEETS\S-02.DWG Scale:1:1 SavedDate:7/8/2020 Time:15:03 Plot Date: Sangalang, Zosimo; 7/17/2020; 14:43 ; Layout:LAYOUT1

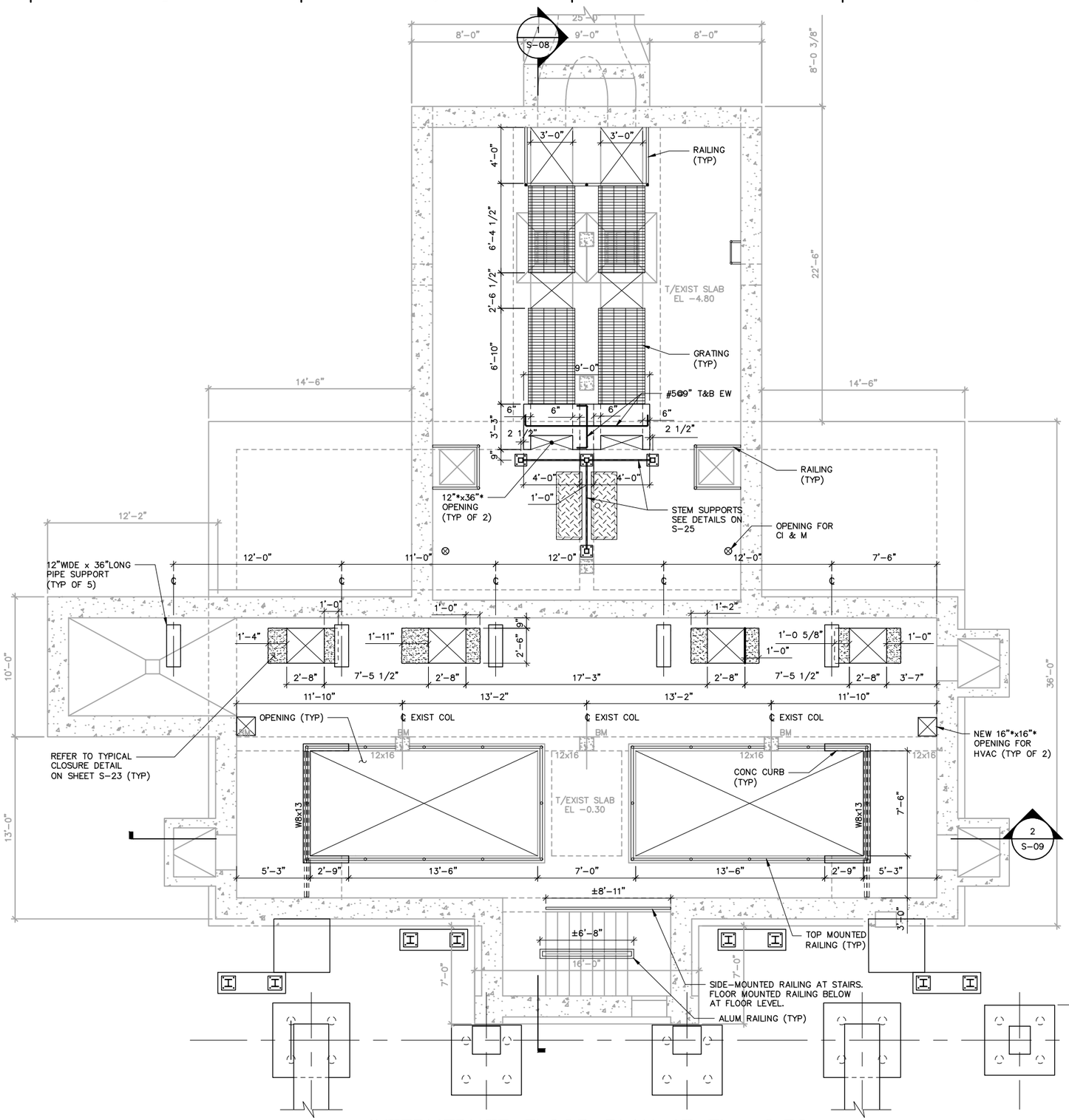

INTERMEDIATE FLOOR PLAN AT EL -0.30

SCALE: 1/4" = 1'-0"

0 2' 4' 8'

NOTES:

1. LIVE LOAD = 100 PSF
2. REFER TO STANDARD DETAILS, SHOWN ON DWG S-19 THROUGH S-25 FOR ADDITIONAL DETAILS.
3. CONTRACTOR IS RESPONSIBLE FOR PROVIDING ALL NECESSARY DEWATERING MEASURES AND FOR ANY SHEETING THAT MAY BE NEEDED DURING CONSTRUCTION.
4. ALL EXISTING GRATING FRAMES AND COVER PLATE FRAMES SHALL BE REMOVED. TO INSTALL NEW FRAMING, FOLLOW "TYPICAL OPENING REINFORCING DETAILS IN EXISTING WALLS AND SLABS" IN TYPICAL DETAILS. REPLACE" EMBEDDED WALL OR SLAB FRAME SLEEVE" WITH "TYPICAL GRATING AND CHECKERED PLATE SUPPORT DETAILS."

Hazen ARCADIS
A JOINT VENTURE

LEGAL ENTITY:
ARCADIS CE, INC.

SEALS

STATE OF NEW YORK
MARINAL VERMA
LICENSED PROFESSIONAL ENGINEER

NASSAU COUNTY, NEW YORK
DEPARTMENT OF PUBLIC WORKS

LONG BEACH WPCP CONSOLIDATION PUMP STATION CONVERSION

LONG BEACH WASTEWATER POLLUTION CONTROL PLANT

NO.	DATE	ISSUED FOR	BY

COPYRIGHT: 2017 HAZEN AND SAWYER/ ARCADIS A JOINT VENTURE

DATE:	JULY 2020
PROJECT NO.:	00726790.0001
FILE NAME:	S-03
DESIGNED BY:	M. ESTRADA
DRAWN BY:	Z. SANGALANG
CHECKED BY:	M. VERMA

SHEET TITLE

STRUCTURAL

PUMP STATION INTERMEDIATE FLOOR PLAN AT EL -0.30

SCALE: 1/4" = 1'-0"

S-03

SHEET 36 OF 112

User:SANGALANG Spec:AUS-NCSMOD File1:\ACAD\PROJ\00726790.0001\SHEETS\S-03.DWG Scale:1:1 SavedDate:7/8/2020 Time:15:05 Plot Date: Sangalang, Zosima; 7/17/2020; 15:21 ; Layout:LAYOUT1

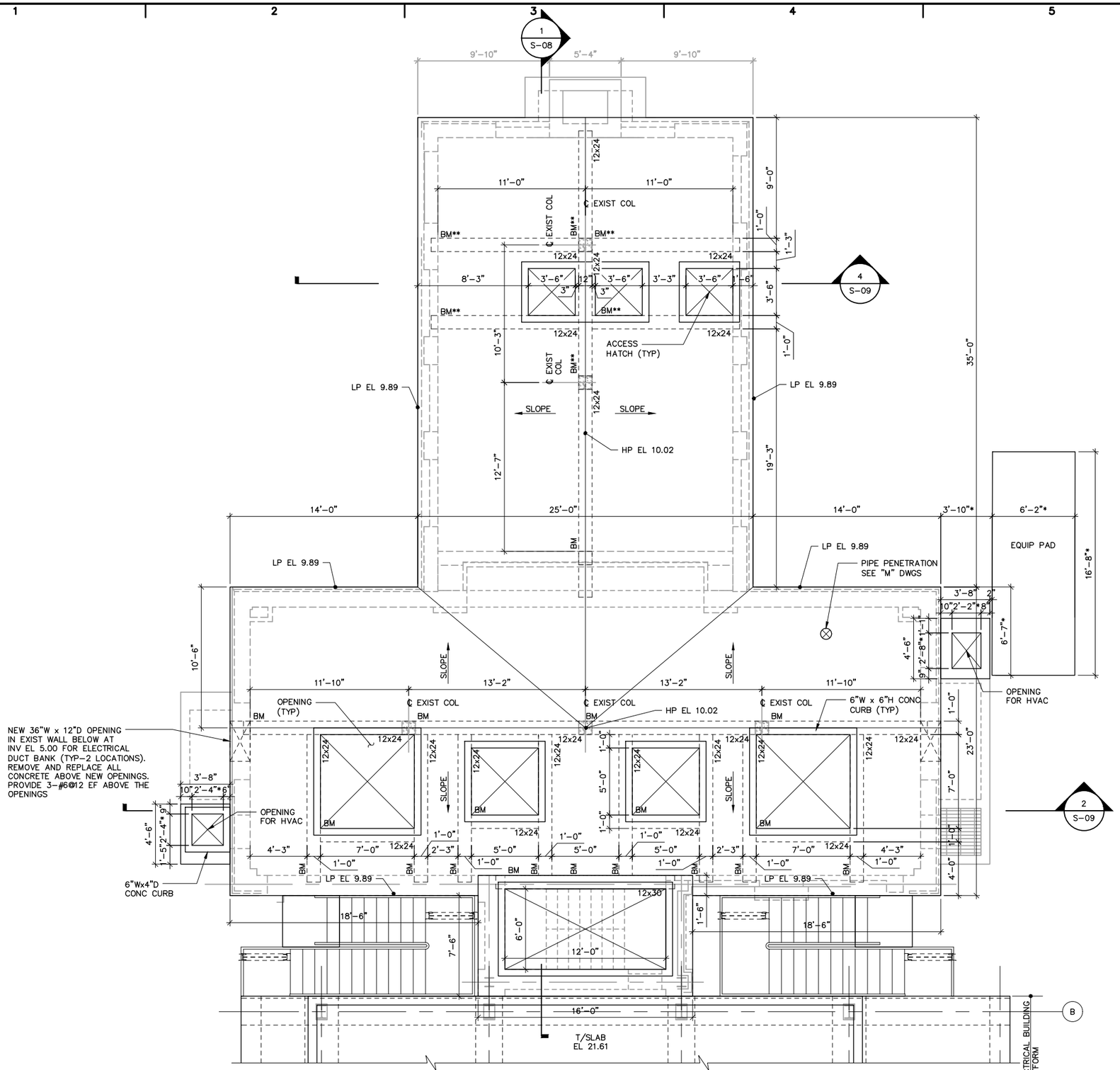

NOTES:

1. ** BEAMS SHALL HAVE STIRRUP SPACING OF 9" OC.
2. REFER TO STANDARD DETAILS, SHOWN ON DWG S-19 THROUGH S-25 FOR ADDITIONAL DETAILS.
3. LIVE LOAD = 250 PSF

Hazen ARCADIS
A JOINT VENTURE

LEGAL ENTITY:
ARCADIS CE, INC.

SEALS

NASSAU COUNTY, NEW YORK
DEPARTMENT OF PUBLIC WORKS

LONG BEACH WPCP CONSOLIDATION
PUMP STATION CONVERSION

LONG BEACH WASTEWATER POLLUTION CONTROL PLANT

NO.	DATE	ISSUED FOR	BY

COPYRIGHT: 2017 HAZEN AND SAWYER/ ARCADIS A JOINT VENTURE

DATE:	JULY 2020
PROJECT NO.:	00726790.0001
FILE NAME:	S-04
DESIGNED BY:	M. ESTRADA
DRAWN BY:	Z. SANGALANG
CHECKED BY:	M. VERMA

SHEET TITLE

STRUCTURAL

PUMP STATION FLOOR PLAN AT EL 9.89

SCALE: 1/4" = 1'-0"

S-04

SHEET 37 OF 112

User: SANGALANG Spec: AUS-NCSM00 File:I:\ACAD\PROJ\00726790.0001\SHEETS\S-04.DWG Scale:1:1 SavedDate:7/8/2020 Time:15:06 Plot Date: Sangalang, Zosimo; 7/17/2020; 15:30 ; Layout:LAYOUT1

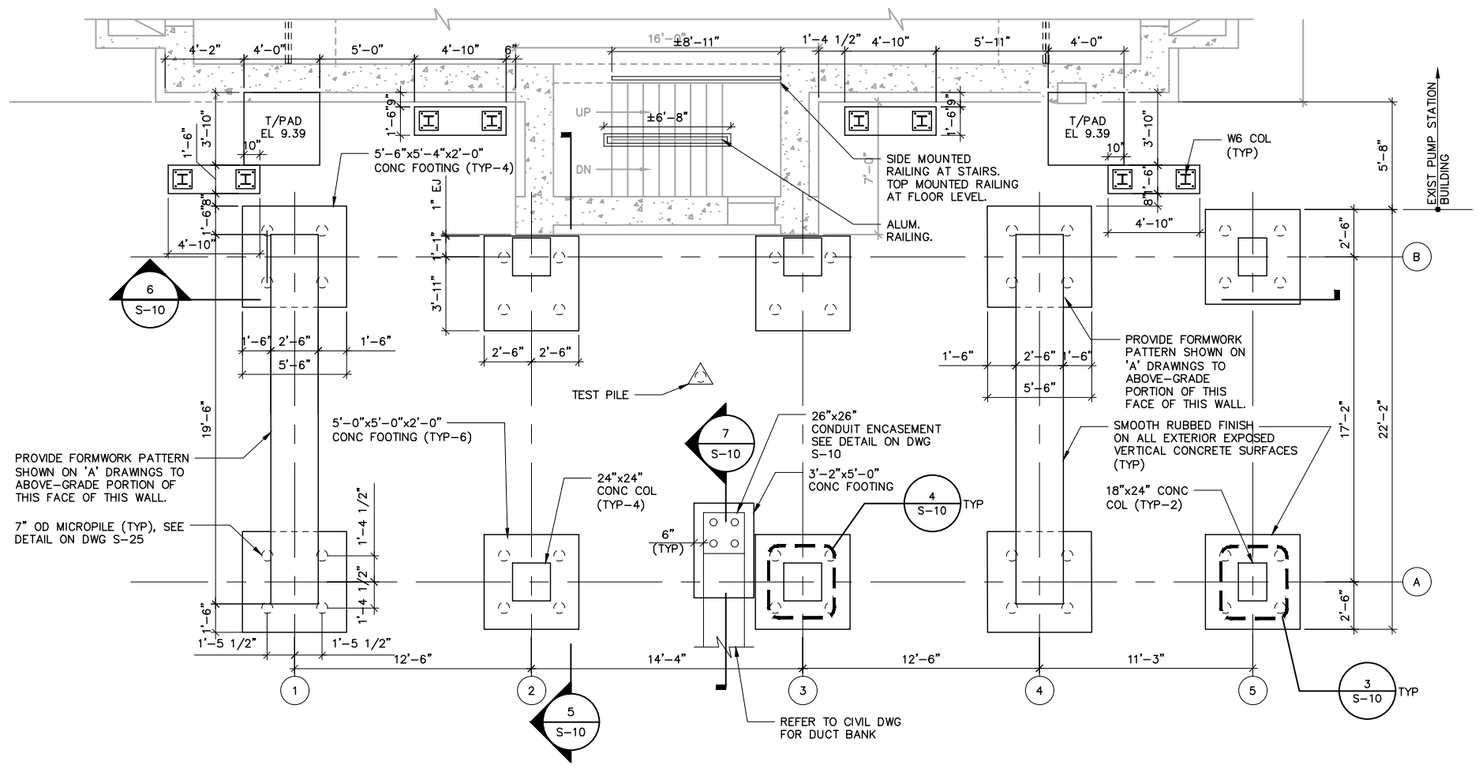

FOUNDATION PLAN AT EL 3.40

SCALE: 1/4" = 1'-0"

NOTES:

1. REFER TO STANDARD DETAILS, SHOWN ON DWGS S-19 THROUGH S-25 FOR ADDITIONAL DETAILS.

Hazen ARCADIS
A JOINT VENTURE

LEGAL ENTITY:
ARCADIS CE, INC.

SEALS

NASSAU COUNTY, NEW YORK
DEPARTMENT OF PUBLIC WORKS

LONG BEACH WPCP CONSOLIDATION
PUMP STATION CONVERSION

LONG BEACH WASTEWATER POLLUTION CONTROL PLANT

NO.	DATE	ISSUED FOR	BY

COPYRIGHT: 2017 HAZEN AND SAWYER/ ARCADIS A JOINT VENTURE

DATE: JULY 2020
PROJECT NO.: 00726790.0001
FILE NAME: S-05
DESIGNED BY: M. ESTRADA
DRAWN BY: Z. SANGALANG
CHECKED BY: M. VERMA

SHEET TITLE

STRUCTURAL

ELECTRICAL BUILDING FOUNDATION PLAN AT EL 3.40

SCALE: 1/4" = 1'-0"

S-05

SHEET 38 OF 112

User:SANGALANG Spec:AUS-NCSMOD File:I:\ACAD\PROJ\00726790.0001\SHEETS\S-05.DWG Scale:1:1 SavedDate:7/8/2020 Time:16:08 Plot Date: Sangalang, Zosimo; 7/17/2020; 15:32 ; Layout:LAYOUT1

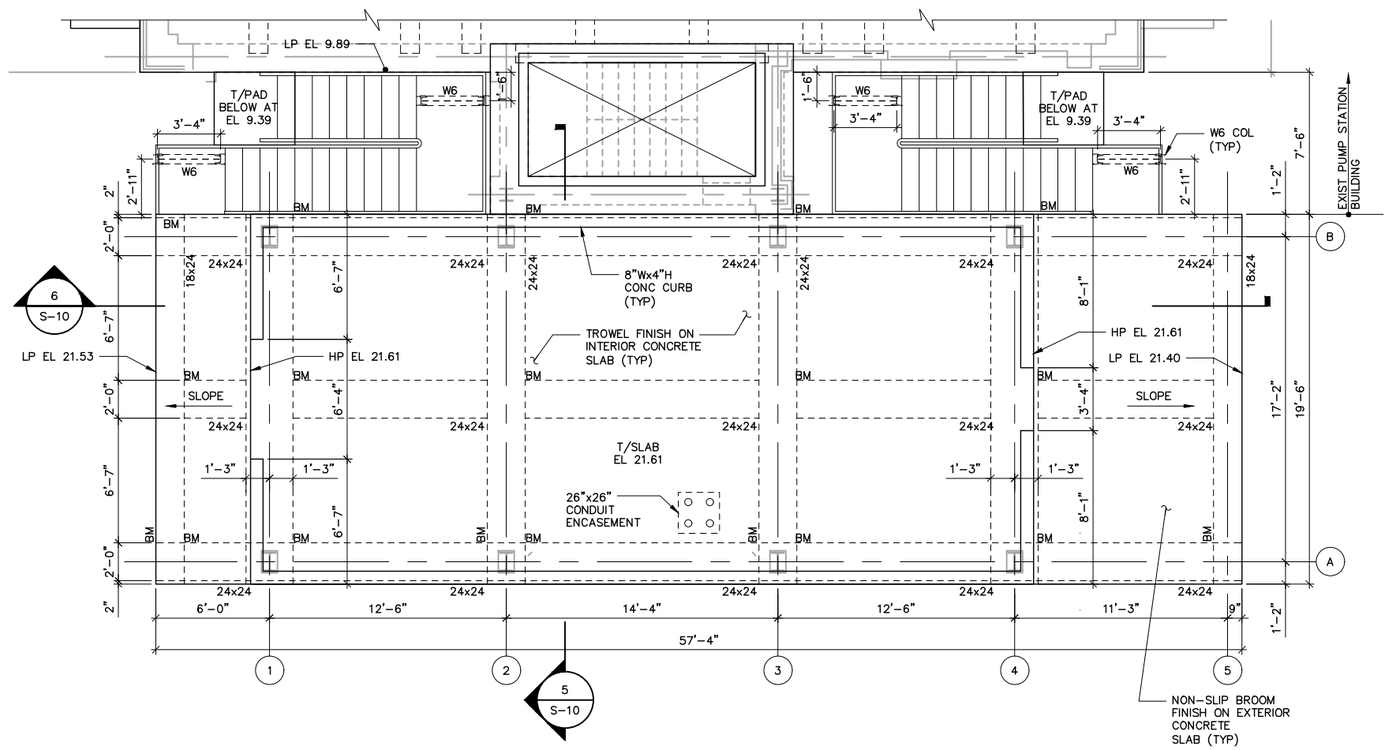

FLOOR PLAN AT EL 21.40

SCALE: 1/4" = 1'-0"

NOTES:

1. CONCRETE PLATFORM DESIGN BASED ON BUILDING REACTIONS PRESENTED BELOW. CONTRACTOR SHALL NOTIFY ENGINEER IF BUILDING MANUFACTURER LOADS ARE DIFFERENT FROM VALUES IN THE TABLE BY MORE THAN 10%. REACTIONS SHOWN ARE IN KIPS.
2. COLUMN AND BASE PLATE SIZE TO BE SUPPLIED BY PRE-ENGINEERED BUILDING MANUFACTURER.
3. FLOOR LIVE LOADS = 250 PSF
4. CONTRACTOR IS RESPONSIBLE FOR PROVIDING ALL NECESSARY DEWATERING MEASURES.
5. REFER TO STANDARD DETAILS, SHOWN ON DWGS S-19 THROUGH S-25 FOR ADDITIONAL DETAILS.

COLUMN LINE	STRUCTURE DEAD LOAD		DEAD LOAD OF ROOF AND WALLS		ROOF LIVE LOAD		SNOW LOAD	
	X	Y	X	Y	X	Y	X	Y
WINDWARD	0.199	2.47	0.486	3.081	0.707	4.481	0.693	3.089
LEEWARD	0.199	2.47	0.486	3.081	0.707	4.481	0.693	3.089
COLUMN LINE	SEISMIC LOAD N/S		SEISMIC LOAD E/W		WIND LOAD N/S		WIND LOAD E/W	
	X	Y	X	Y	X	Y	X	Y
WINDWARD	0.166	−0.203	0.151	−0.226	−4.708	3.767	−6.007	4.660
LEEWARD	0.174	0.204	0.151	0.226	−2.270	3.284	−2.101	3.796

Hazen ARCADIS
A JOINT VENTURE

LEGAL ENTITY:
ARCADIS CE, INC.

SEALS

NASSAU COUNTY, NEW YORK
DEPARTMENT OF PUBLIC WORKS

LONG BEACH WPCP CONSOLIDATION PUMP STATION CONVERSION

LONG BEACH WASTEWATER POLLUTION CONTROL PLANT

NO.	DATE	ISSUED FOR	BY

COPYRIGHT: 2017 HAZEN AND SAWYER/ ARCADIS A JOINT VENTURE

DATE: JULY 2020
PROJECT NO.: 00726790.0001
FILE NAME: S-06
DESIGNED BY: C. BROADBENT
DRAWN BY: Z. SANGALANG
CHECKED BY: M. VERMA

SHEET TITLE

STRUCTURAL

ELECTRICAL BUILDING FLOOR PLAN AT EL 21.40

SCALE: 1/4" = 1'-0"

S-06

SHEET 39 OF 112

User:SANGALANG Spec:AUS-NCSMOD File:I:\ACAD\PROJ\00726790.0001\SHEETS\S-06.DWG Scale:1:1 SavedDate:7/8/2020 Time:17:11 Plot Date: Sangalang, Zosimo; 7/17/2020; 14:57 ; Layout:LAYOUT1

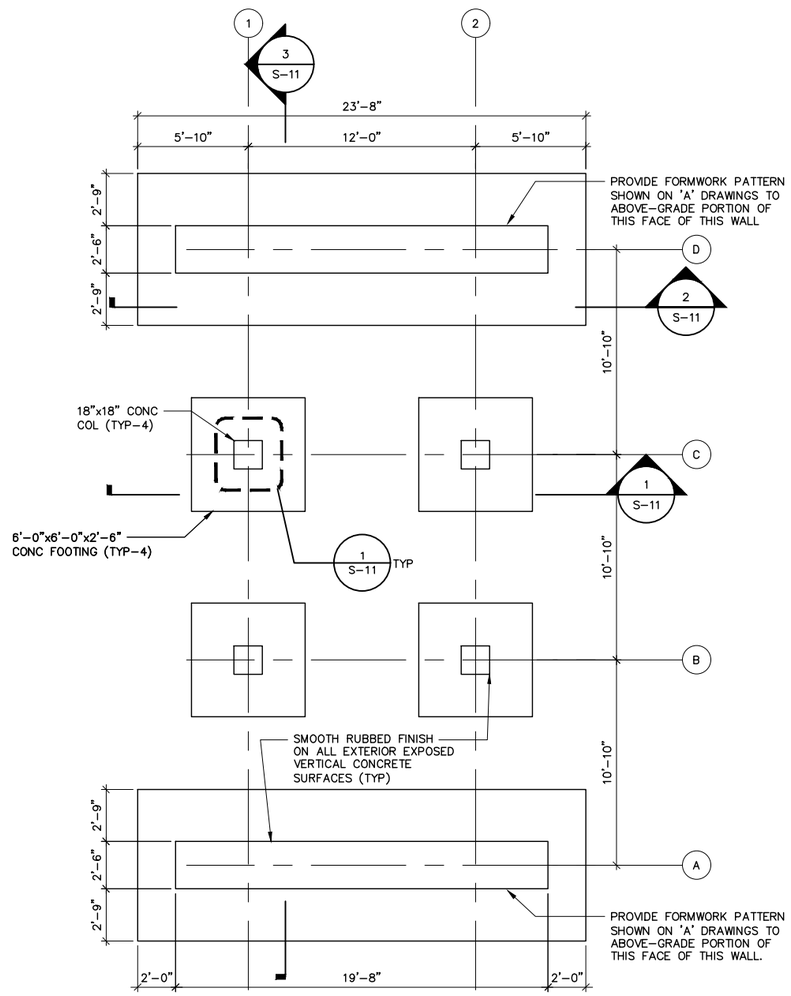

FOUNDATION PLAN AT EL 3.40

SCALE: 1/4" = 1'-0"

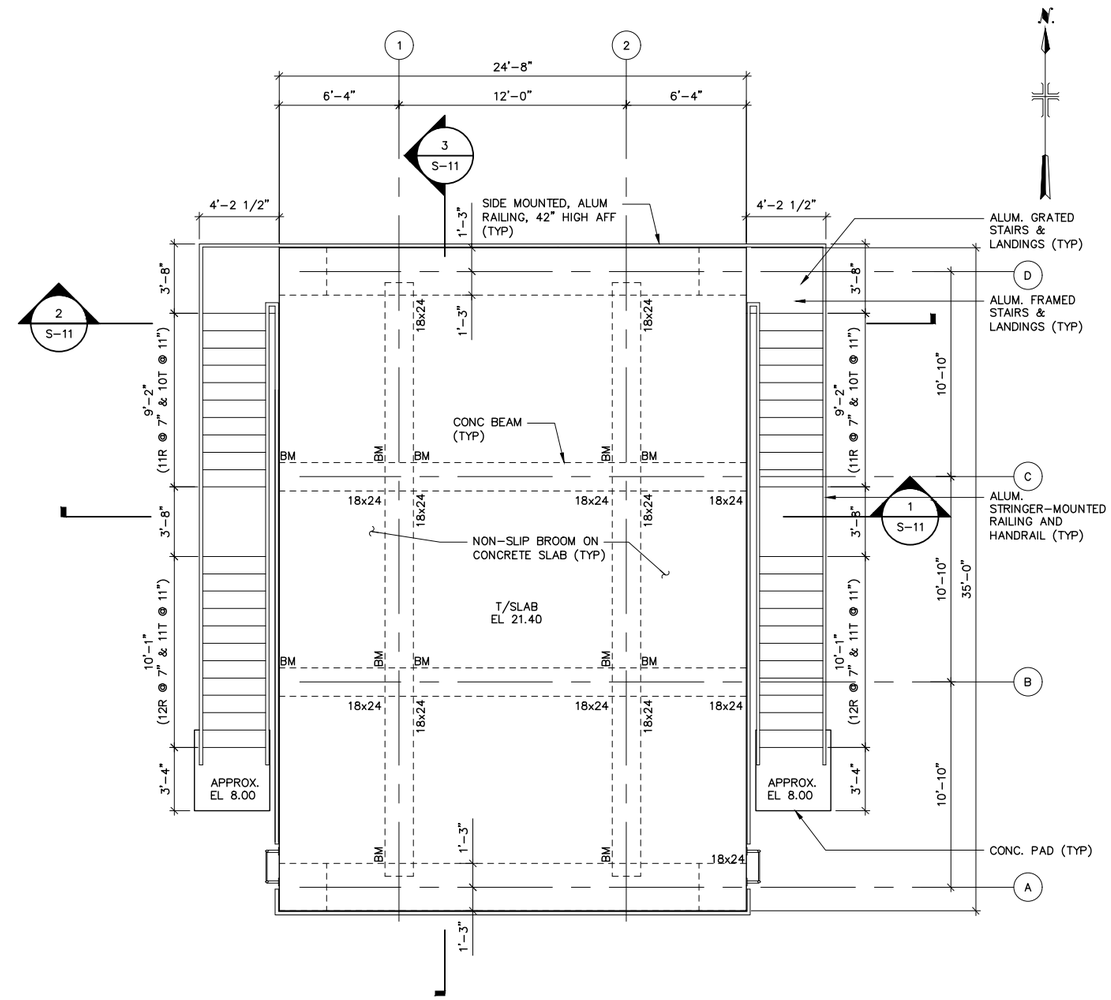

PLATFORM PLAN AT EL 21.40

SCALE: 1/4" = 1'-0"

NOTES:

1. LIVE LOAD: 250 PSF.
2. FOR LOCATION OF CONDUITS AND REQUIRED SLAB AND WALL PENETRATIONS, SEE ELECTRICAL DRAWINGS.
3. CONTRACTOR SHALL COORDINATE ANCHORAGE FOR GENERATOR TO AVOID CONFLICTS WITH SLAB REINFORCEMENT. ANCHOR REQUIREMENTS SHALL BE PROVIDED BY GENERATOR MANUFACTURER IN ACCORDANCE WITH SPECIFICATION 16231.
4. CONTRACTOR IS RESPONSIBLE FOR PROVIDING ALL NECESSARY DEWATERING MEASURES AND FOR ANY SHEETING THAT MAY BE NEEDED DURING CONSTRUCTION.
5. REFER TO STANDARD DETAILS, SHOWN ON DWGS S-19 THROUGH S-25 FOR ADDITIONAL DETAILS.

Hazen ARCADIS
A JOINT VENTURE

LEGAL ENTITY:
ARCADIS CE, INC.

SEALS

NASSAU COUNTY, NEW YORK
DEPARTMENT OF PUBLIC WORKS

LONG BEACH WPCP CONSOLIDATION
PUMP STATION CONVERSION

LONG BEACH WASTEWATER POLLUTION CONTROL PLANT

NO.	DATE	ISSUED FOR	BY

COPYRIGHT: 2017 HAZEN AND SAWYER/ ARCADIS A JOINT VENTURE

DATE: JULY 2020
PROJECT NO.: 00726790.0001
FILE NAME: S-07
DESIGNED BY: C. BROADBENT
DRAWN BY: Z. SANGALANG
CHECKED BY: M. VERMA

SHEET TITLE

STRUCTURAL

GENERATOR PLATFORM PLANS

SCALE: AS SHOWN

S-07

SHEET 40 OF 112

User:SANGALANG Spec:AUS-NCSMOD File:I:\ACAD\PROJ\00726790.0001\SHEETS\S-07.DWG Scale:1:1 SavedDate:7/8/2020 Time:17:07 Plot Date: Sangalang, Zosimo; 7/17/2020; 15:28 ; Layout:LAYOUT1

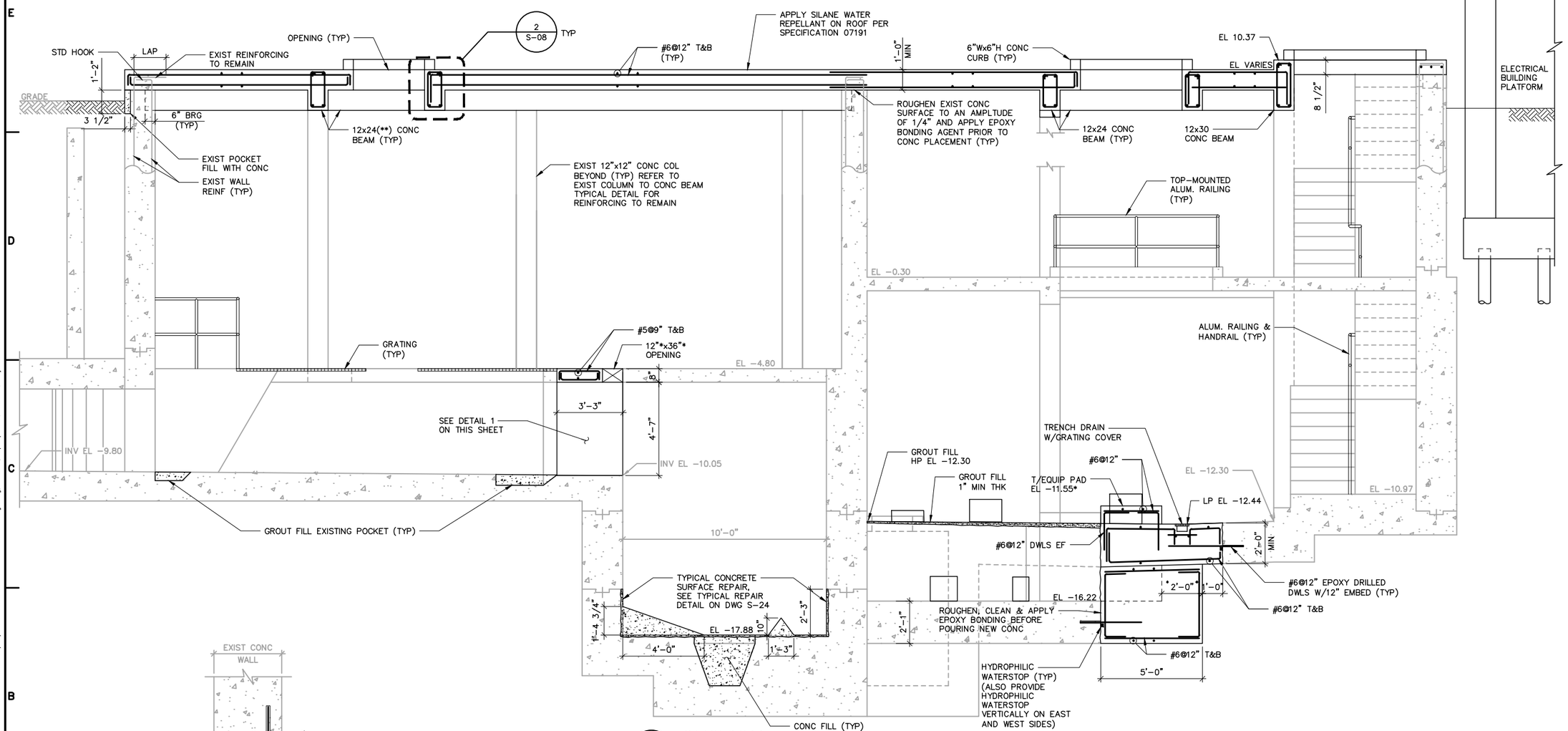

1 / S-02 SECTION
3/8" = 1'-0"

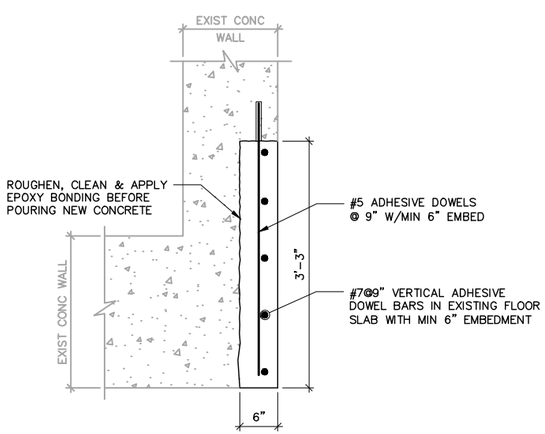

1 / S-08 DETAIL
1" = 1'-0"

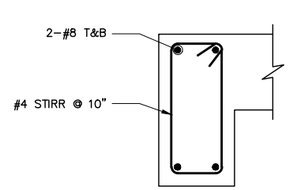

12x24 CONC BEAM

2 / S-08 DETAIL
1" = 1'-0"

NOTES:

1. (**) BEAMS SHALL HAVE STIRRUP SPACING OF 9" OC.
2. CONTRACTOR IS RESPONSIBLE FOR PROVIDING ALL NECESSARY DEWATERING MEASURES AND FOR ANY SHEETING THAT MAY BE NEEDED DURING CONSTRUCTION.
3. REFER TO STANDARD DETAILS, SHOWN ON DWGS S-19 THROUGH S-25 FOR ADDITIONAL DETAILS.

Hazen ARCADIS A JOINT VENTURE

LEGAL ENTITY:
ARCADIS CE, INC.

SEALS

NASSAU COUNTY, NEW YORK
DEPARTMENT OF PUBLIC WORKS

LONG BEACH WPCP CONSOLIDATION
PUMP STATION CONVERSION

LONG BEACH WASTEWATER POLLUTION CONTROL PLANT

NO.	DATE	ISSUED FOR	BY

COPYRIGHT: 2017 HAZEN AND SAWYER/ ARCADIS A JOINT VENTURE

DATE: JULY 2020
PROJECT NO.: 00726790.0001
FILE NAME: S-08
DESIGNED BY: M. ESTRADA
DRAWN BY: Z. SANGALANG
CHECKED BY: M. VERMA

SHEET TITLE
STRUCTURAL
SECTIONS AND DETAILS SHEET 1

SCALE: AS SHOWN

S-08
SHEET 41 OF 112

User:SANGALANG Spec:AUS-NCSMOD File:I:\ACAD\PROJ\00726790.0001\SHEETS\S-08.DWG Scale:1:1 SavedDate:7/15/2020 Time:08:20 Plot Date: Sangalang, Zosima: 7/17/2020; 15:34 ; Layout:LAYOUT1

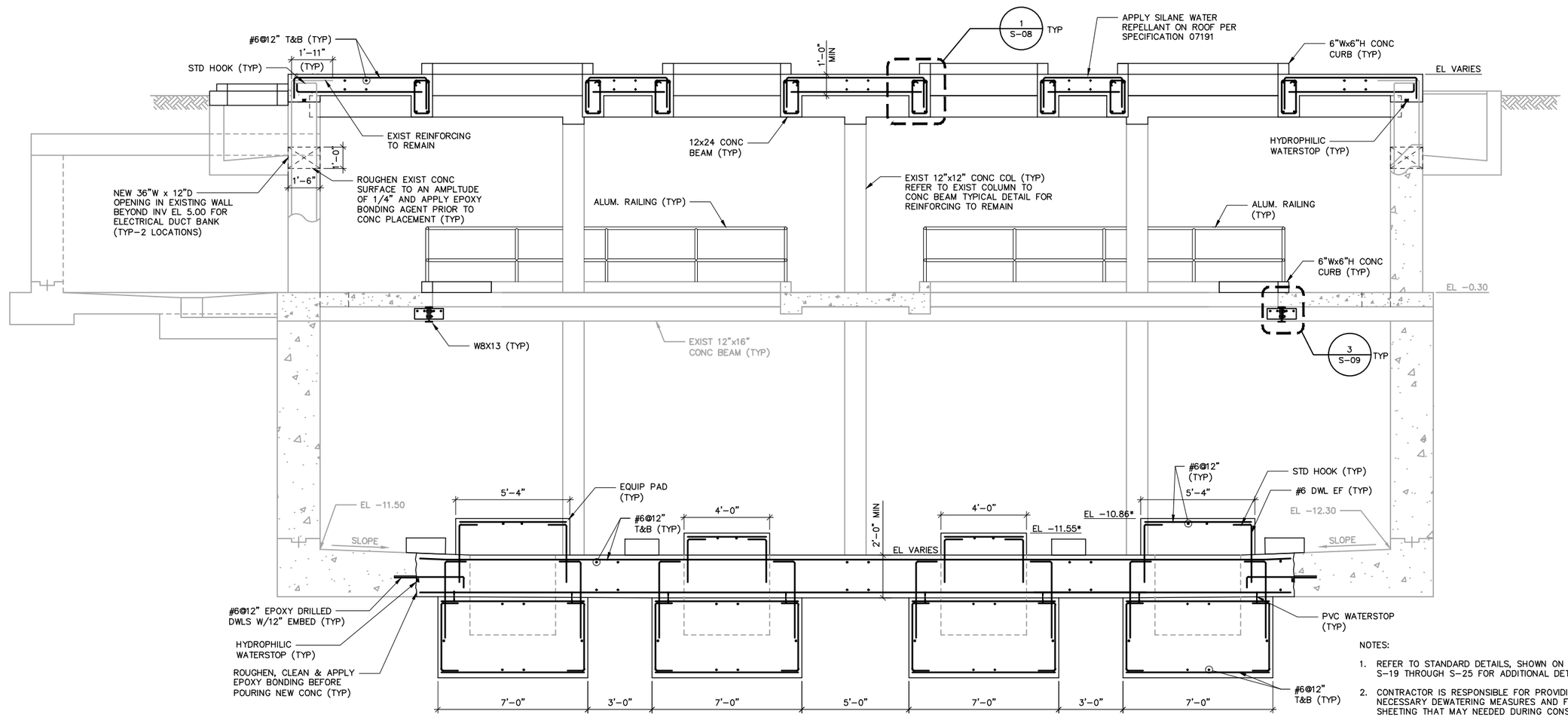

2 S-02 SECTION
3/8" = 1'-0"

NOTES:

1. REFER TO STANDARD DETAILS, SHOWN ON DWGS S-19 THROUGH S-25 FOR ADDITIONAL DETAILS.
2. CONTRACTOR IS RESPONSIBLE FOR PROVIDING ALL NECESSARY DEWATERING MEASURES AND FOR ANY SHEETING THAT MAY NEEDED DURING CONSTRUCTION.

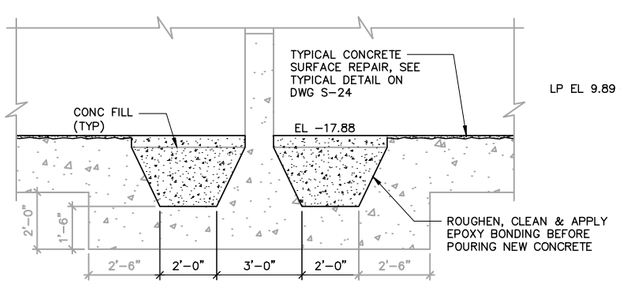

3 S-02 SECTION
3/8" = 1'-0"

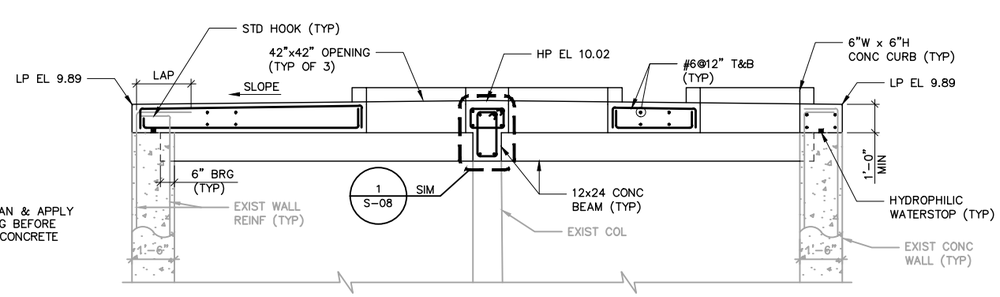

4 S-04 SECTION
3/8" = 1'-0"

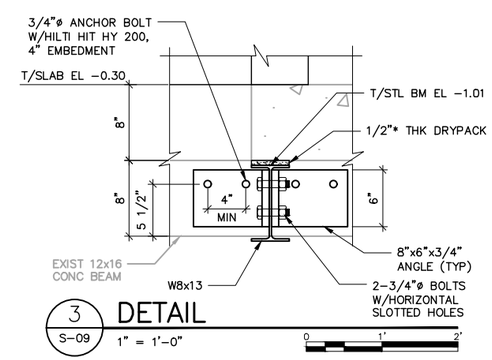

3 S-09 DETAIL
1" = 1'-0"

NOTES:

1. STEEL BEAM IS TO BE INSTALLED PRIOR TO DEMOLITION OF EXISTING SLAB.
2. PROVIDE SPRAYED FIRE-RESISTIVE MATERIALS TO NEW BEAM PER SPECIFICATION

Hazen ARCADIS
A JOINT VENTURE

LEGAL ENTITY:
ARCADIS CE, INC.

SEALS

STATE OF NEW YORK
MANAL VERMA
072178
LICENSED PROFESSIONAL ENGINEER

NASSAU COUNTY, NEW YORK
DEPARTMENT OF PUBLIC WORKS

LONG BEACH WPCP CONSOLIDATION PUMP STATION CONVERSION

LONG BEACH WASTEWATER POLLUTION CONTROL PLANT

NO.	DATE	ISSUED FOR	BY

COPYRIGHT: 2017 HAZEN AND SAWYER/ ARCADIS A JOINT VENTURE

DATE:	JULY 2020
PROJECT NO.:	00726790.0001
FILE NAME:	S-09
DESIGNED BY:	M. ESTRADA
DRAWN BY:	Z. SANGALANG
CHECKED BY:	M. VERMA

SHEET TITLE

STRUCTURAL

SECTIONS AND DETAILS SHEET 2

SCALE: AS SHOWN

S-09

SHEET 42 OF 112

User:SANGALANG Spec:AUS-NCSMOD File:I:\ACAD\PROJ\00726790.0001\SHEETS\S-09.DWG Scale:1:1 SavedDate:7/15/2020 Time:08:23 Plot Date: Sangalang, Zasimo; 7/17/2020; 16:18 : Layout:LAYOUT1

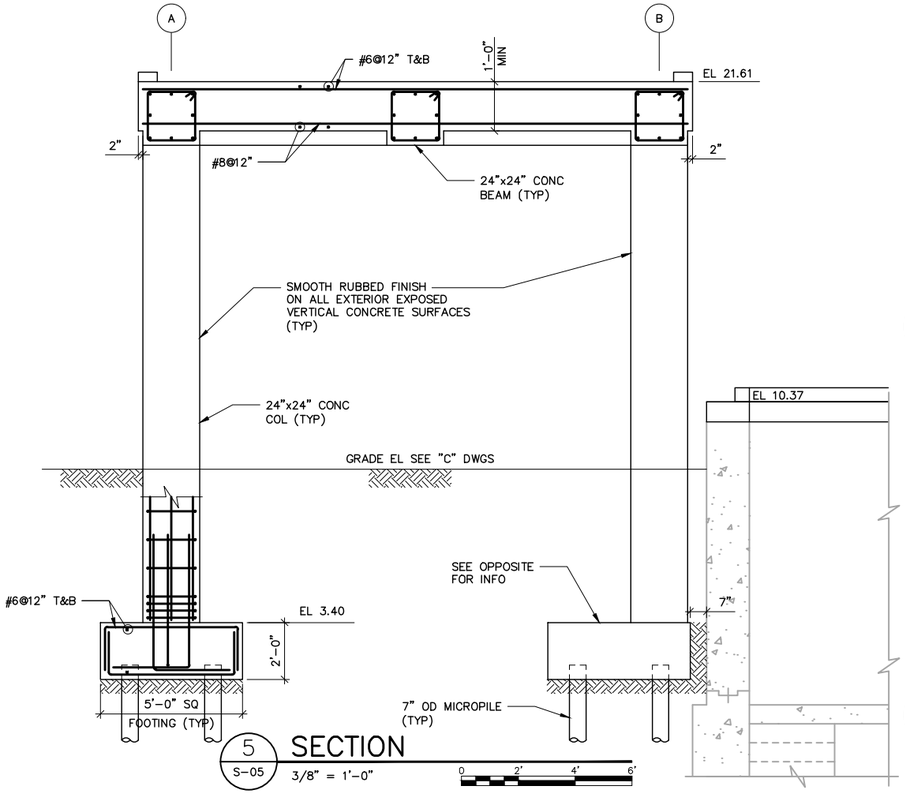

5 S-05 SECTION
3/8" = 1'-0"

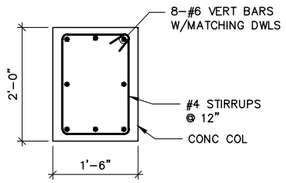

3 S-05 DETAIL
3/4" = 1'-0"

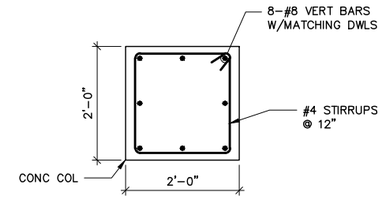

4 S-05 DETAIL
3/4" = 1'-0"

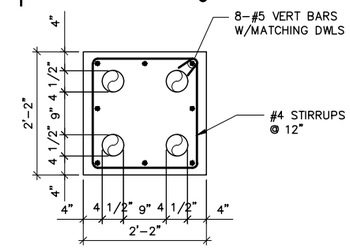

CONDUIT ENCASMENT DETAIL
SCALE: 3/4" = 1'-0"

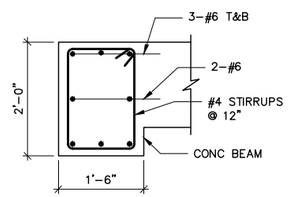

5 S-10 DETAIL
3/4" = 1'-0"

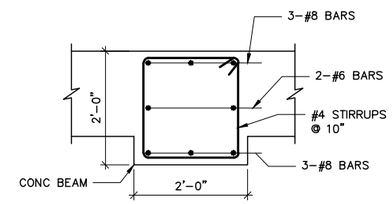

6 S-10 DETAIL
3/4" = 1'-0"

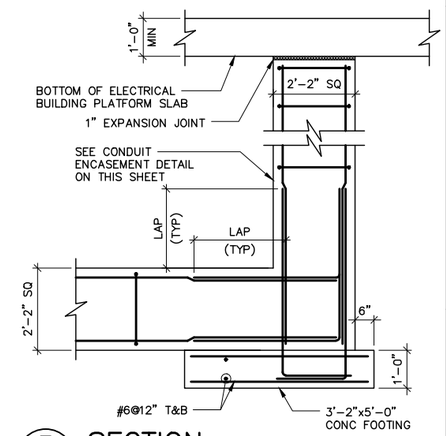

7 S-05 SECTION
1/2" = 1'-0"

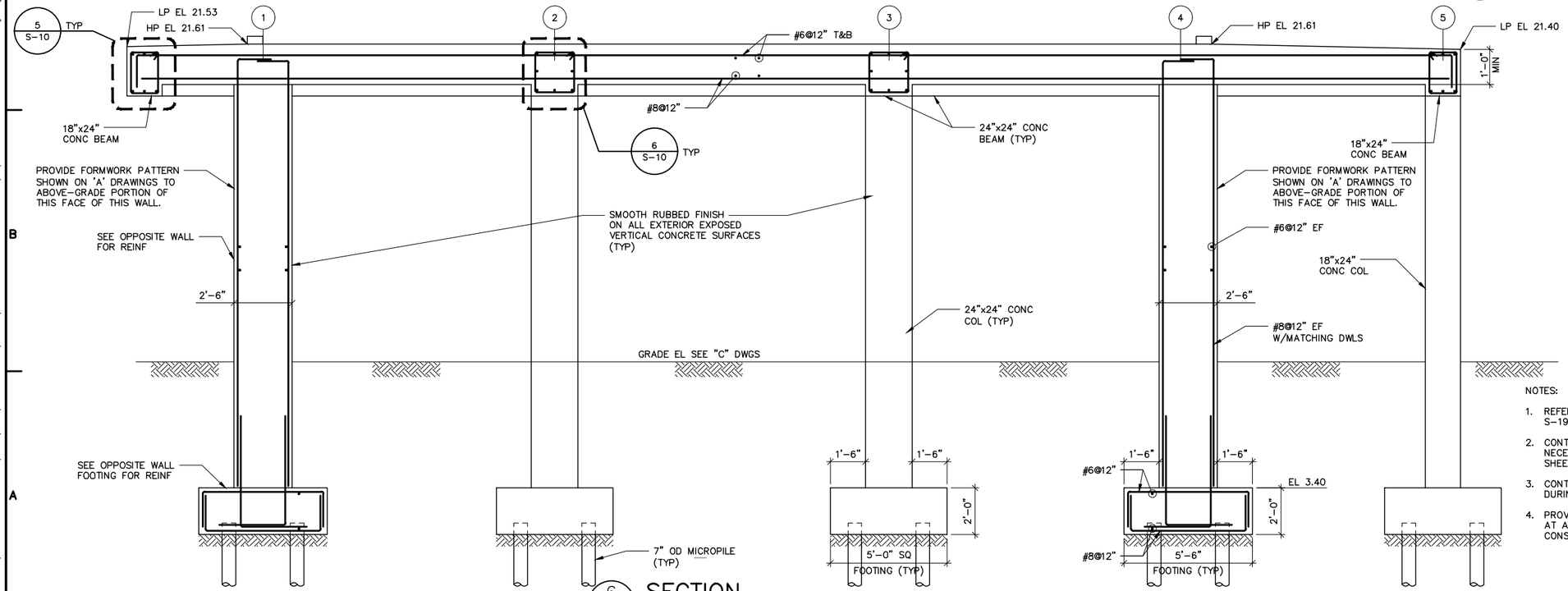

6 S-05 SECTION
3/8" = 1'-0"

NOTES:

1. REFER TO STANDARD DETAILS, SHOWN ON DWGS S-19 THROUGH S-25 FOR ADDITIONAL DETAILS.
2. CONTRACTOR IS RESPONSIBLE FOR PROVIDING ALL NECESSARY DEWATERING MEASURES AND FOR ANY SHEETING THAT MAY NEEDED DURING CONSTRUCTION.
3. CONTRACTOR MUST PROTECT EXISTING BUILDING DURING EXCAVATION.
4. PROVIDE DAMP PROOFING PER SPECIFICATION 07191 AT ALL EXISTING CONCRETE EXPOSED DURING CONSTRUCTION.

Hazen ARCADIS
A JOINT VENTURE

LEGAL ENTITY:
ARCADIS CE, INC.

SEALS

NASSAU COUNTY, NEW YORK
DEPARTMENT OF PUBLIC WORKS

LONG BEACH WPCP CONSOLIDATION PUMP STATION CONVERSION

LONG BEACH WASTEWATER POLLUTION CONTROL PLANT

NO.	DATE	ISSUED FOR	BY

COPYRIGHT: 2017 HAZEN AND SAWYER/ ARCADIS A JOINT VENTURE

DATE:	JULY 2020
PROJECT NO.:	00726790.0001
FILE NAME:	S-10
DESIGNED BY:	M. ESTRADA
DRAWN BY:	Z. SANGALANG
CHECKED BY:	M. VERMA

SHEET TITLE

STRUCTURAL

SECTIONS AND DETAILS SHEET 3

SCALE: AS SHOWN

S-10

SHEET 43 OF 112

User:SANGALANG Spec:AUS-NCSMOD File:I:\ACAD\PROJ\00726790.0001\SHEETS\S-10.DWG Scale:1:1 SavedDate:7/15/2020 Time:08:48 Plot Date: Sangalang, Zasimo; 7/17/2020; 16:17 ; Layout:LAYOUT1

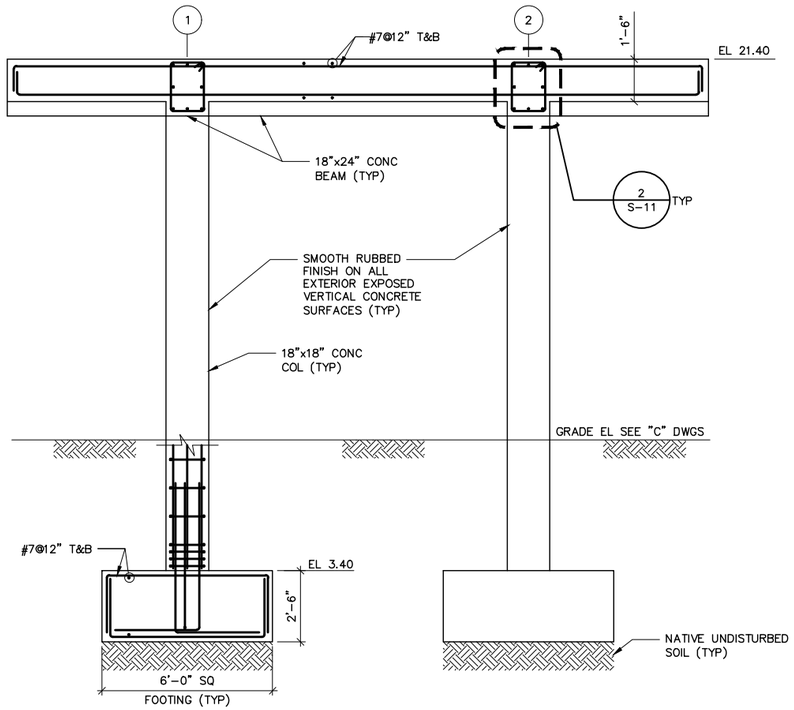

1 S-07 SECTION 3/8" = 1'-0"

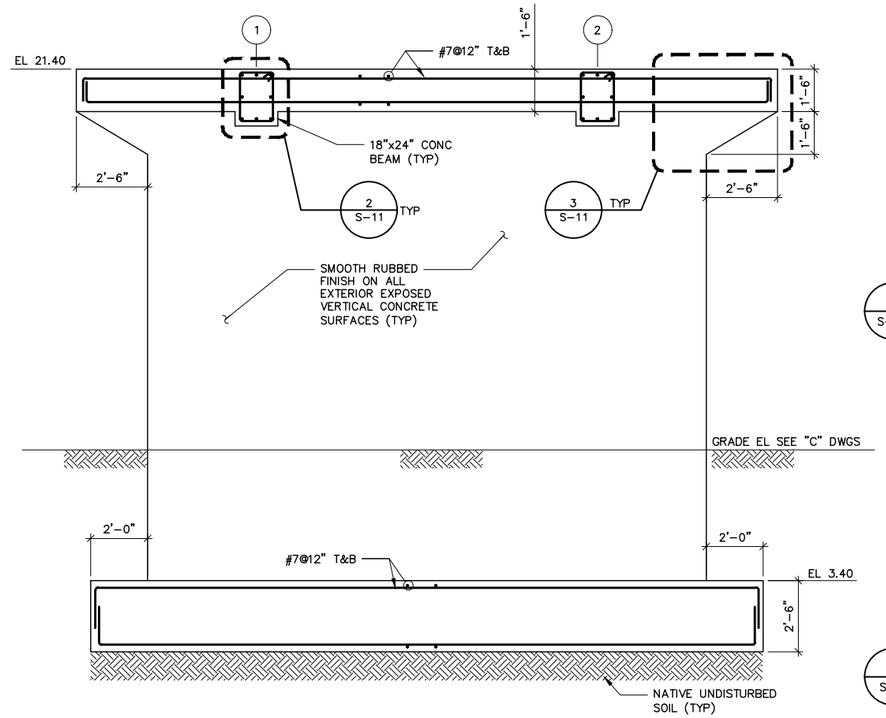

2 S-07 SECTION 3/8" = 1'-0"

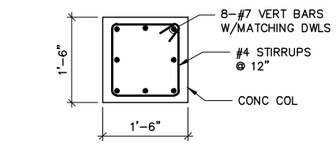

1 S-07 DETAIL 3/4" = 1'-0"

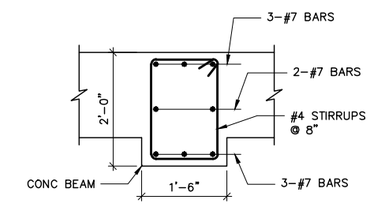

2 S-11 DETAIL 3/4" = 1'-0"

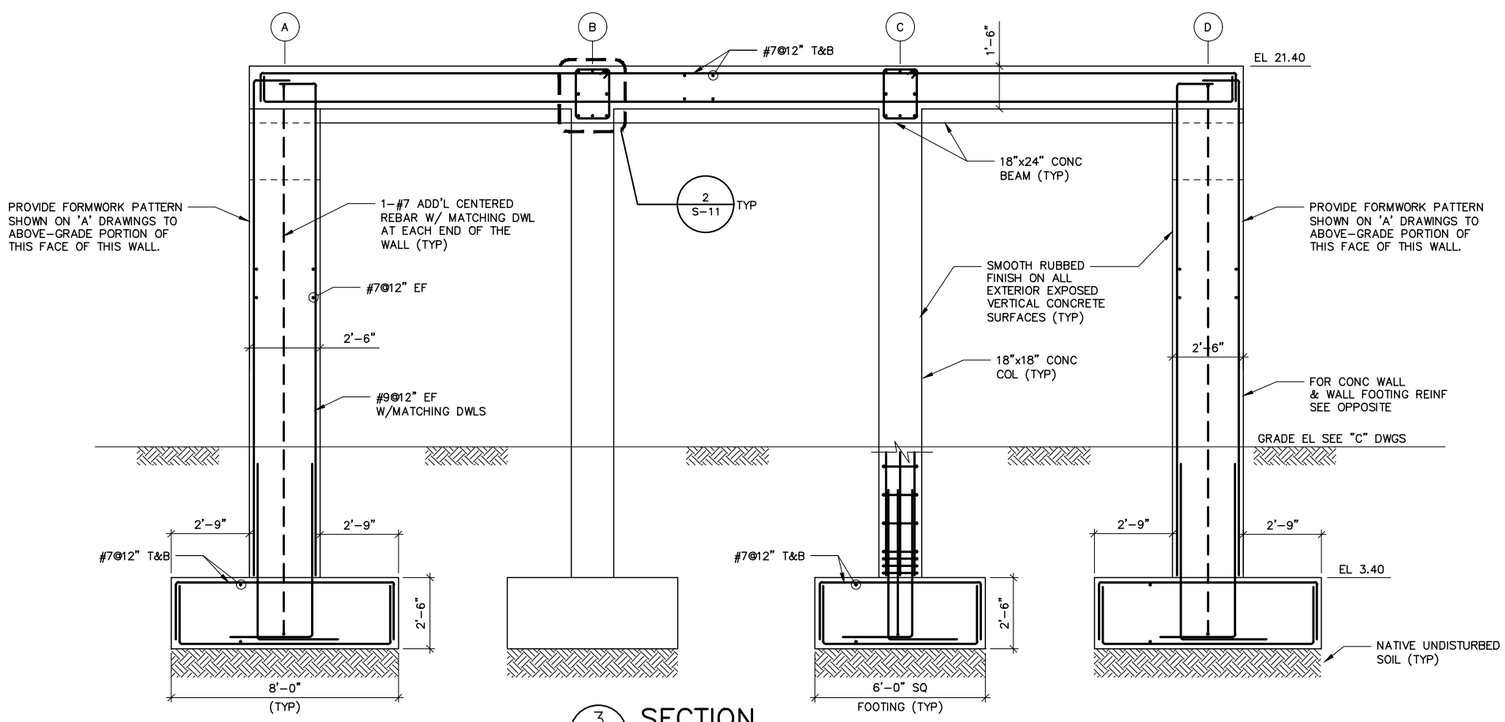

3 S-07 SECTION 3/8" = 1'-0"

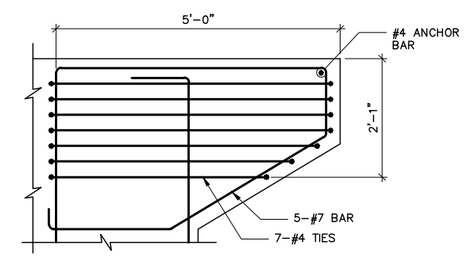

3 S-11 DETAIL 3/4" = 1'-0"

NOTES:

1. FOR LOCATION OF CONDUITS AND REQUIRED SLAB AND WALL SLAB PENETRATIONS, SEE ELECTRICAL DRAWINGS.
2. SEE LAP LENGTH AND SPLICE TABLE ON DRAWINGS S-19.
3. REFER TO STANDARD DETAILS, SHOWN ON DWGS S-19 THROUGH S-25 FOR ADDITIONAL DETAILS.
4. CONTRACTOR IS RESPONSIBLE FOR PROVIDING ALL NECESSARY DEWATERING MEASURES AND FOR ANY SHEETING THAT MAY NEEDED DURING CONSTRUCTION.

Hazen ARCADIS A JOINT VENTURE

LEGAL ENTITY:
ARCADIS CE, INC.

SEALS

NASSAU COUNTY, NEW YORK
DEPARTMENT OF PUBLIC WORKS

LONG BEACH WPCP CONSOLIDATION
PUMP STATION CONVERSION

LONG BEACH WASTEWATER POLLUTION CONTROL PLANT

NO.	DATE	ISSUED FOR	BY

COPYRIGHT: 2017 HAZEN AND SAWYER/ ARCADIS A JOINT VENTURE

DATE:	JULY 2020
PROJECT NO.:	00726790.0001
FILE NAME:	S-11
DESIGNED BY:	C. BROADBENT
DRAWN BY:	Z. SANGALANG
CHECKED BY:	M. VERMA

SHEET TITLE

STRUCTURAL

SECTIONS AND DETAILS SHEET 4

SCALE: AS SHOWN

S-11

SHEET 44 OF 112

User:SANGALANG Spec:AUS-NCSMOD File1:\ACAD\PROJ\00726790.0001\SHEETS\S-11.DWG Scale:1:1 SavedDate:7/8/2020 Time:17:23 Plot Date: Sangalang, Zosima: 7/17/2020; 16:16 ; Layout:LAYOUT1

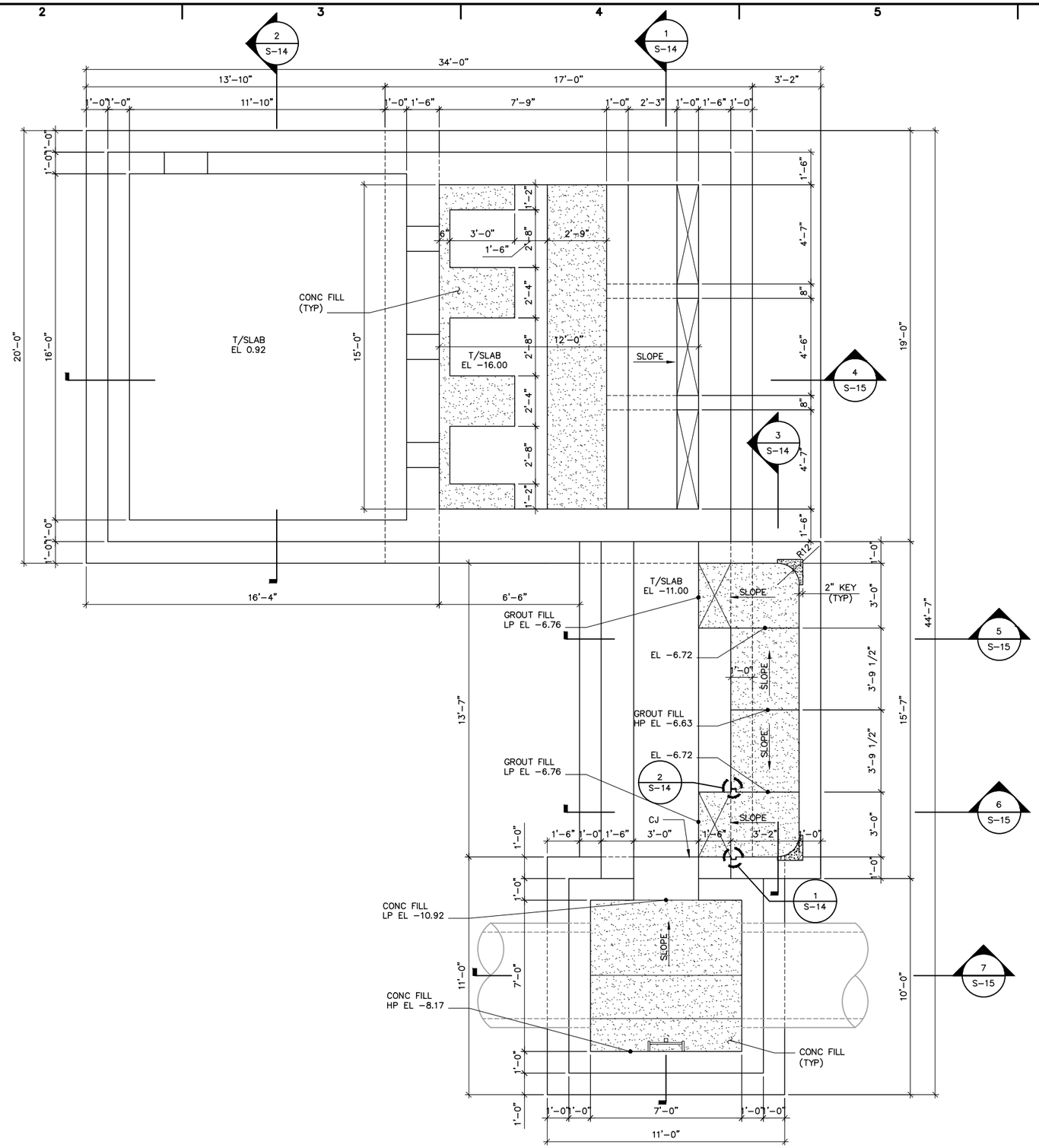

NOTES:

1. LIVE LOAD: 300 PSF

FOUNDATION PLAN

SCALE: 3/8" = 1'-0"

Hazen ARCADIS
A JOINT VENTURE

LEGAL ENTITY:
ARCADIS CE, INC.

SEALS

STATE OF NEW YORK
MANAL VERMA
LICENSED PROFESSIONAL ENGINEER

NASSAU COUNTY, NEW YORK
DEPARTMENT OF PUBLIC WORKS

LONG BEACH WPCP CONSOLIDATION
PUMP STATION CONVERSION

LONG BEACH WASTEWATER POLLUTION CONTROL PLANT

NO.	DATE	ISSUED FOR	BY

COPYRIGHT: 2017 HAZEN AND SAWYER/ ARCADIS A JOINT VENTURE

DATE: JULY 2020
PROJECT NO.: 00726790.0001
FILE NAME: S-12
DESIGNED BY: C. BROADBENT
DRAWN BY: Z. SANGALANG
CHECKED BY: M. VERMA

SHEET TITLE

STRUCTURAL

BYPASS PUMP STATION FOUNDATION PLAN

SCALE: AS SHOWN

S-12

SHEET 45 OF 112

User:SANGALANG Spec:AUS-NCSMOD File1:\ACAD\PROJ\00726790.0001\SHEETS\S-12.DWG Scale:1:1 SavedDate:7/8/2020 Time:15:38 Plot Date: Sangalang, Zosima: 7/17/2020; 16:14 ; Layout:LAYOUT1

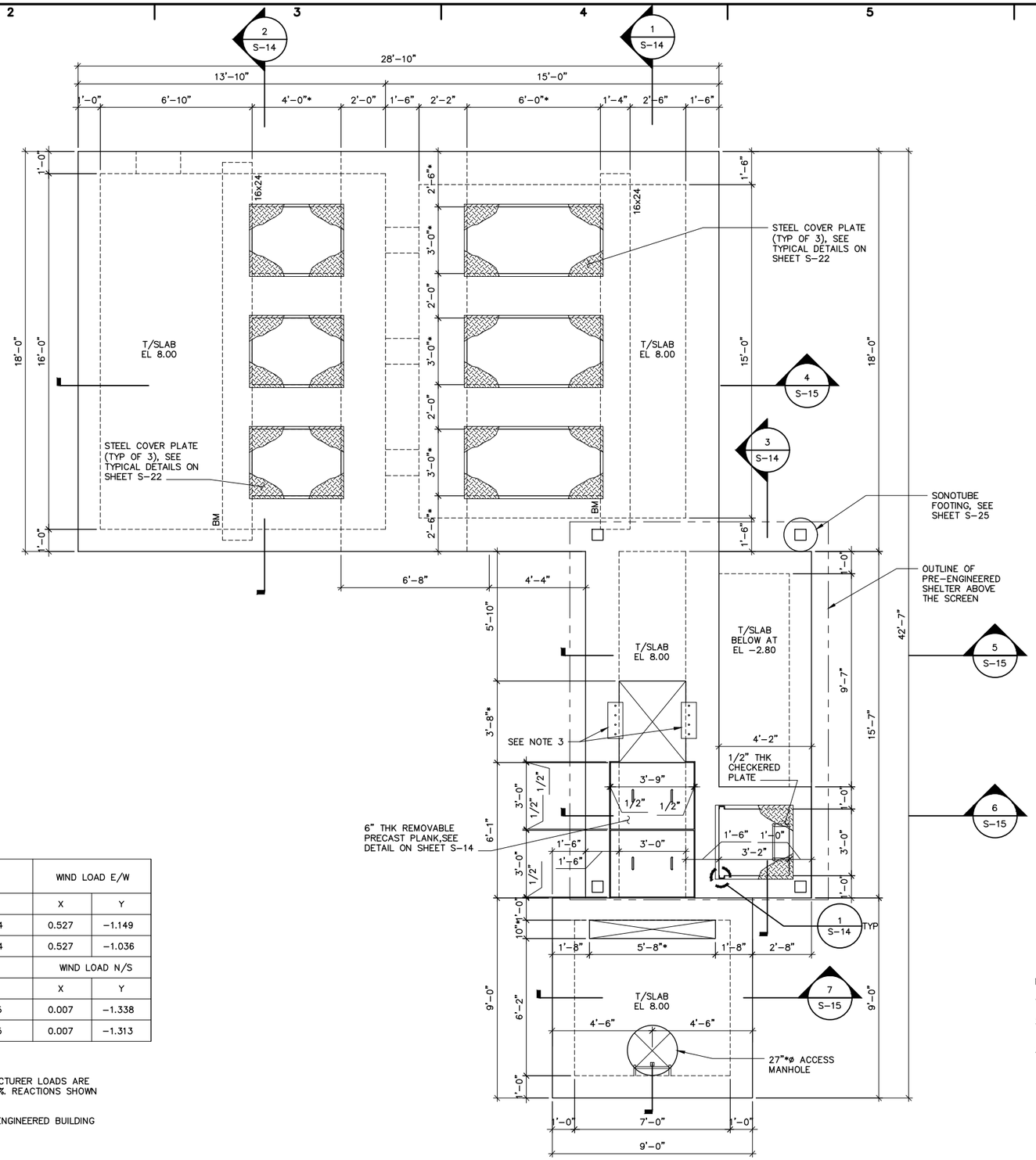

TOP PLAN AT EL 8.00

SCALE: 3/8" = 1'-0"

COLUMN LINE	STRUCTURE DEAD LOAD		SNOW LOAD		WIND LOAD E/W	
	X	Y	X	Y	X	Y
WINDWARD	1.826	0.010	0.829	0.004	0.527	−1.149
LEEWARD	1.826	0.010	0.829	0.004	0.527	−1.036
COLUMN LINE	SEISMIC LOAD N/S		SEISMIC LOAD E/W		WIND LOAD N/S	
	X	Y	X	Y	X	Y
WINDWARD	0.141	0.101	−0.212	0.105	0.007	−1.338
LEEWARD	0.141	0.101	0.212	0.105	0.007	−1.313

NOTES:

1. CONTRACTOR SHALL NOTIFY ENGINEER IF BUILDING MANUFACTURER LOADS ARE DIFFERENT FROM VALUES IN THE TABLE BY MORE THAN 10%. REACTIONS SHOWN ARE IN KIPS.
2. COLUMN AND BASE PLATE SIZE TO BE SUPPLIED BY PRE-ENGINEERED BUILDING MANUFACTURER.

NOTES:

1. LIVE LOAD: 300 PSF.
2. REFER TO TYPICAL GRATING AND CHECKERED PLATE SUPPORT DETAILS ON SHEET S-19.
3. REFER TO "M" DRAWINGS AND MANUFACTURERS DETAILS FOR BAR SCREEN CONNECTION TO TOP OF CHANNEL WALLS.

Hazen ARCADIS
A JOINT VENTURE

LEGAL ENTITY:
ARCADIS CE, INC.

SEALS

NASSAU COUNTY, NEW YORK
DEPARTMENT OF PUBLIC WORKS

LONG BEACH WPCP CONSOLIDATION PUMP STATION CONVERSION

LONG BEACH WASTEWATER POLLUTION CONTROL PLANT

NO.	DATE	ISSUED FOR	BY

COPYRIGHT: 2017 HAZEN AND SAWYER/ ARCADIS A JOINT VENTURE

DATE: JULY 2020
PROJECT NO.: 00726790.0001
FILE NAME: S-13
DESIGNED BY: C. BROADBENT
DRAWN BY: Z. SANGALANG
CHECKED BY: M. VERMA

SHEET TITLE

STRUCTURAL

BYPASS PUMP STATION TOP PLAN

SCALE: AS SHOWN

S-13

SHEET 46 OF 112

User: SANGALANG Spec: AUS-NCSMOD File: I:\ACAD\PROJ\00726790.0001\SHEETS\S-13.DWG Scale: 1:1 SavedDate: 7/17/2020 Time: 15:17 Plot Date: Sangalang, Zosimo; 7/17/2020; 15:20 ; Layout: LAYOUT1

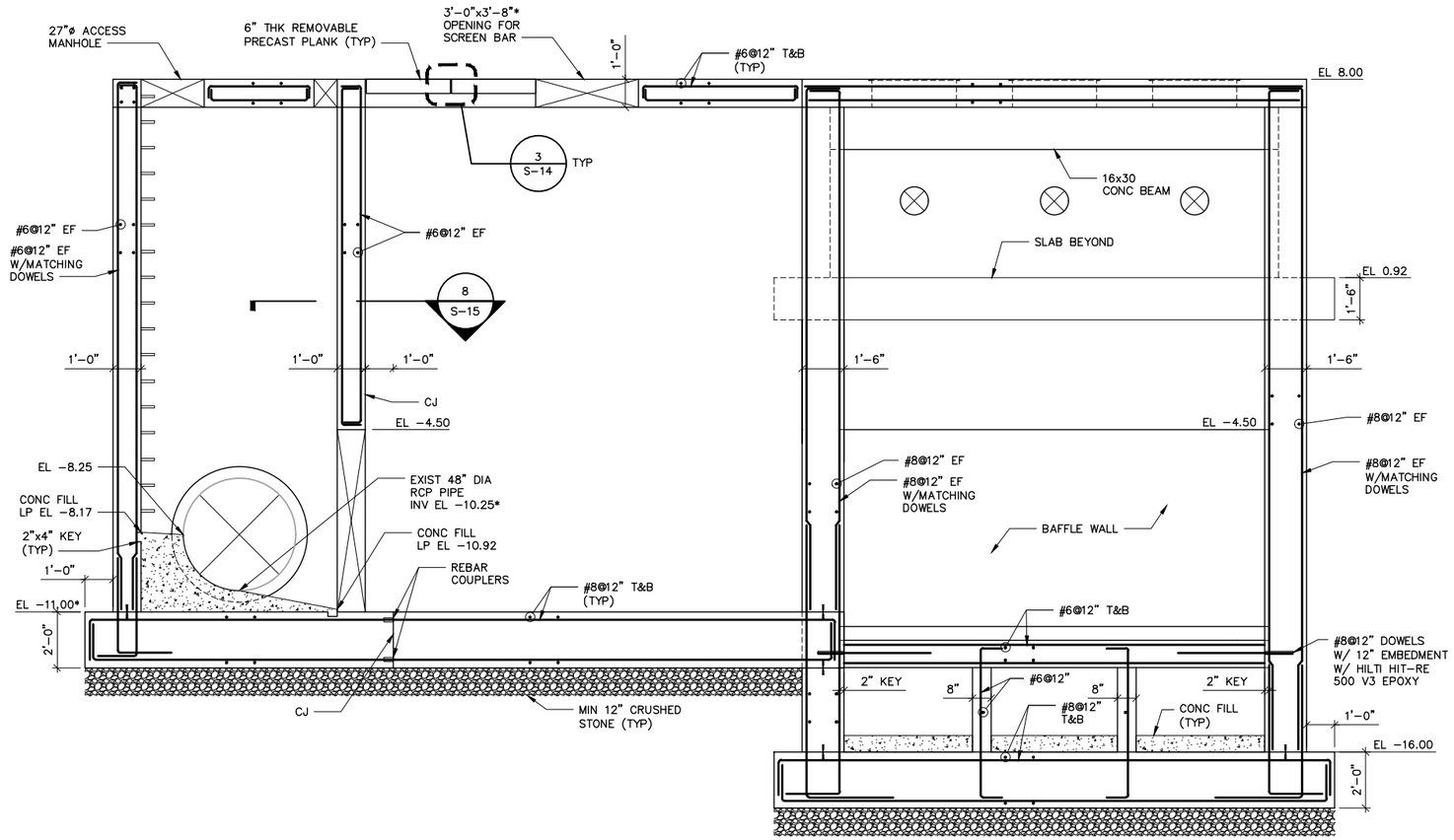

1 S-12 SECTION
3/8" = 1'-0"

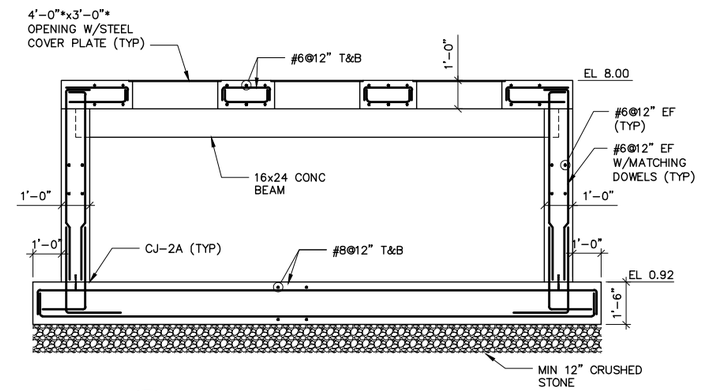

2 S-12 SECTION
3/8" = 1'-0"

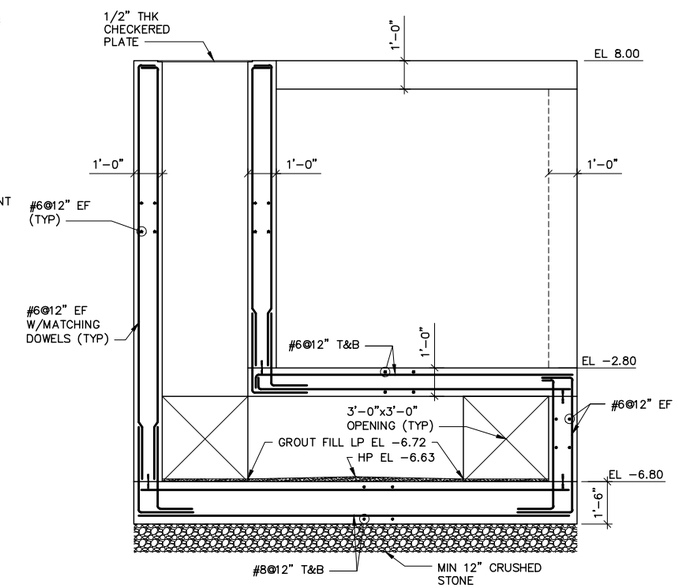

3 S-12 SECTION
3/8" = 1'-0"

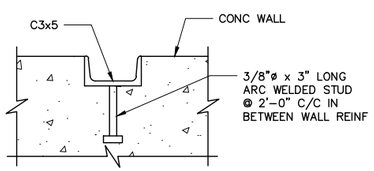

1 S-14 DETAIL
3" = 1'-0"

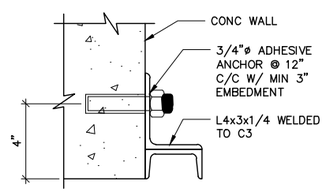

2 S-14 DETAIL
3" = 1'-0"

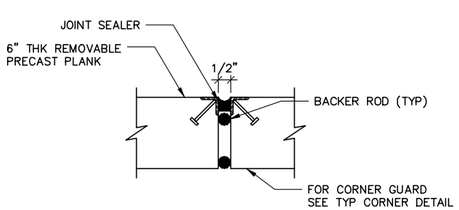

3 S-14 DETAIL
NTS

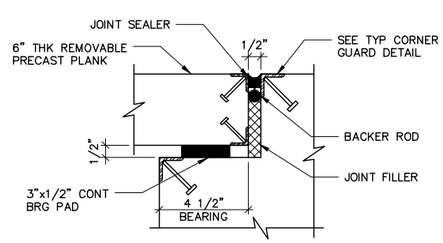

4 S-15 DETAIL
NTS

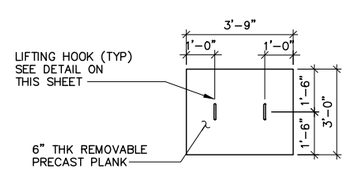

REMOVABLE PRECAST PLANK DETAIL
SCALE: 1 1/2" = 1'-0"

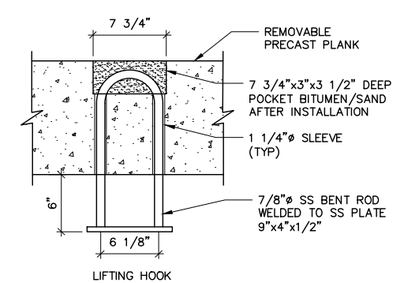

LIFTING HOOK DETAIL
SCALE: 1 1/2" = 1'-0"

Hazen ARCADIS
A JOINT VENTURE

LEGAL ENTITY:
ARCADIS CE, INC.

SEALS

NASSAU COUNTY, NEW YORK
DEPARTMENT OF PUBLIC WORKS

LONG BEACH WPCP CONSOLIDATION
PUMP STATION CONVERSION

LONG BEACH WASTEWATER POLLUTION CONTROL PLANT

NO.	DATE	ISSUED FOR	BY

COPYRIGHT: 2017 HAZEN AND SAWYER/ ARCADIS A JOINT VENTURE

DATE: JULY 2020
PROJECT NO.: 00726790.0001
FILE NAME: S-14
DESIGNED BY: C. BROADBENT
DRAWN BY: Z. SANGALANG
CHECKED BY: M. VERMA

SHEET TITLE
STRUCTURAL

BYPASS PUMP STATION SECTIONS AND DETAILS SHEET 1

SCALE: AS SHOWN

S-14
SHEET 47 OF 112

User:SANGALANG Spec:AUS-NCSMOD File:I:\ACAD\PROJ\00726790.0001\SHEETS\S-14.DWG Scale:1:1 SavedDate:7/8/2020 Time:15:42 Plot Date: Sangalang, Zasima: 7/17/2020; 16:13 ; Layout:LAYOUT1

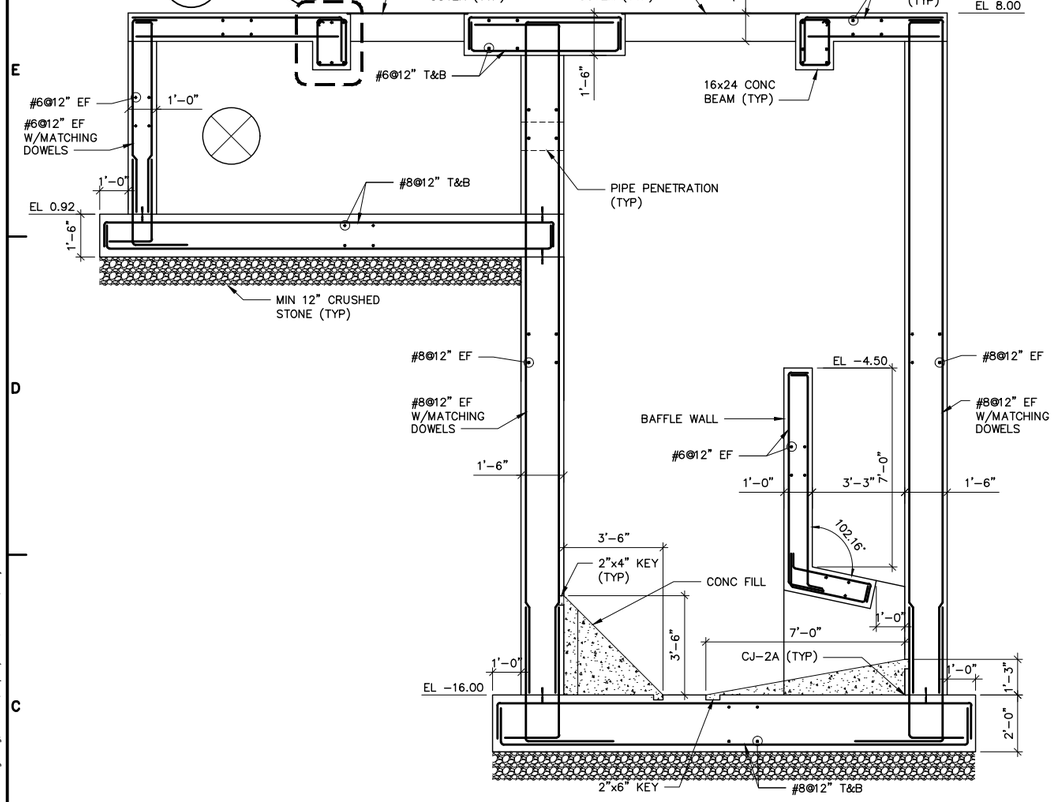

4 S-12 SECTION
3/8" = 1'-0"

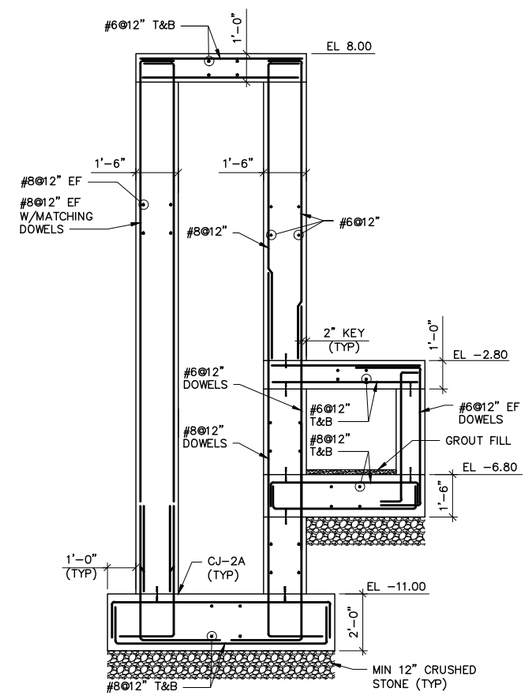

5 S-12 SECTION
3/8" = 1'-0"

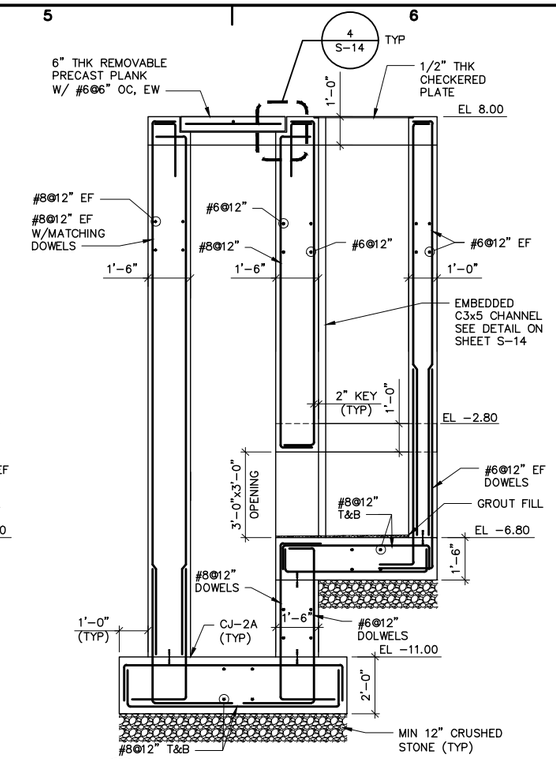

6 S-12 SECTION
3/8" = 1'-0"

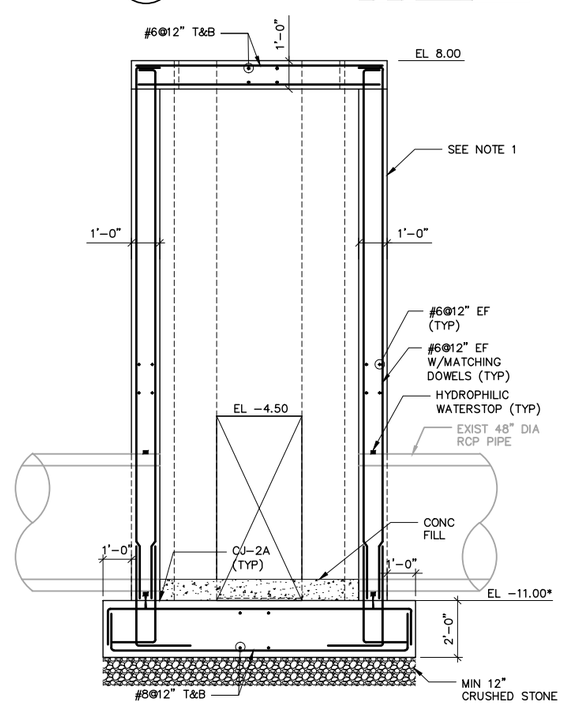

7 S-12 SECTION
3/8" = 1'-0"

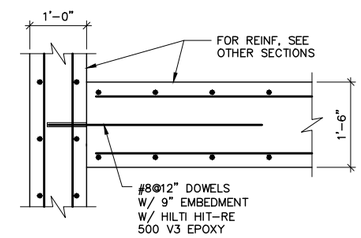

8 S-14 SECTION
3/4" = 1'-0"

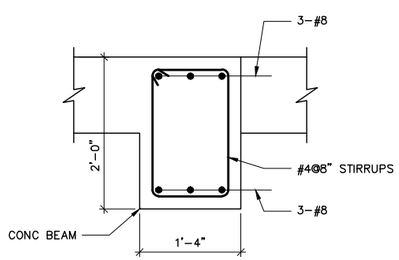

5 S-15 DETAIL
1" = 1'-0"

NOTES:

1. SEE "M" DRAWINGS AND SPECIFICATION SECTION 01705 FOR DETAILS OF CONSTRUCTION OF DIVERSION CHAMBER.
2. CONTRACTOR SHALL NOTIFY THE ENGINEER IF THE INVERT OF EXISTING 48" DIA RCP PIPE IS DIFFERENT THAN WHAT IS SHOWN ON THESE DRAWINGS..

Hazen ARCADIS
A JOINT VENTURE

LEGAL ENTITY:
ARCADIS CE, INC.

SEALS

STATE OF NEW YORK
MANAL VERMA
LICENSED PROFESSIONAL ENGINEER

NASSAU COUNTY, NEW YORK
DEPARTMENT OF PUBLIC WORKS

LONG BEACH WPCP CONSOLIDATION
PUMP STATION CONVERSION

LONG BEACH WASTEWATER POLLUTION CONTROL PLANT

NO.	DATE	ISSUED FOR	BY

COPYRIGHT: 2017 HAZEN AND SAWYER/ ARCADIS A JOINT VENTURE

DATE: JULY 2020
PROJECT NO.: 00726790.0001
FILE NAME: S-15
DESIGNED BY: C. BROADBENT
DRAWN BY: Z. SANGALANG
CHECKED BY: M. VERMA

SHEET TITLE

STRUCTURAL

BYPASS PUMP STATION SECTIONS AND DETAILS SHEET 2

SCALE: AS SHOWN

S-15

SHEET 48 OF 112

User:SANGALANG Spec:AUS-NCSMOD File:I:\ACAD\PROJ\00726790.0001\SHEETS\S-15.DWG Scale:1:1 SavedDate:7/17/2020 Time:16:03 Plot Date: Sangalang, Zosima; 7/17/2020; 16:09 ; Layout:LAYOUT1

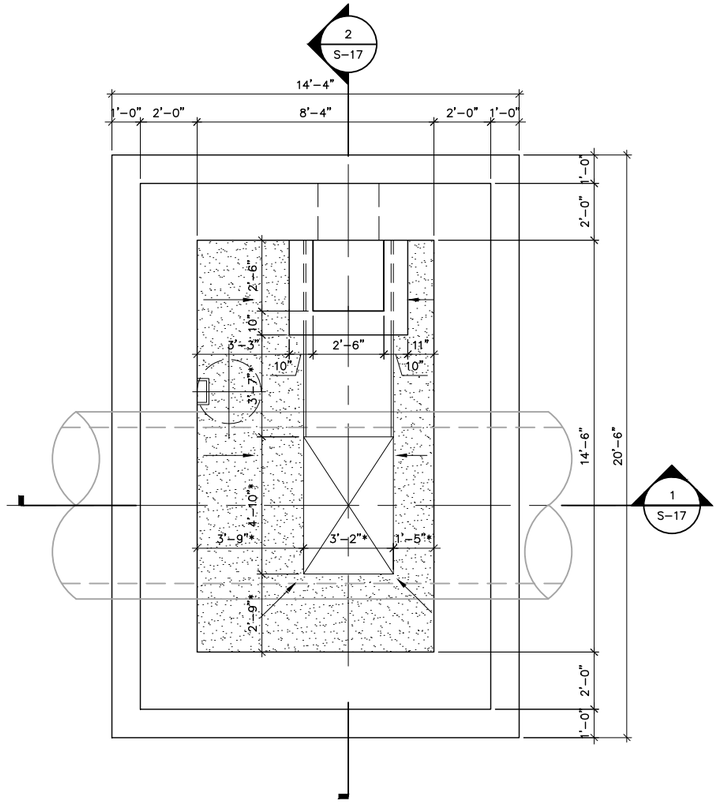

CONNECTION VAULT LOWER PLAN

SCALE: 3/8" = 1'-0"

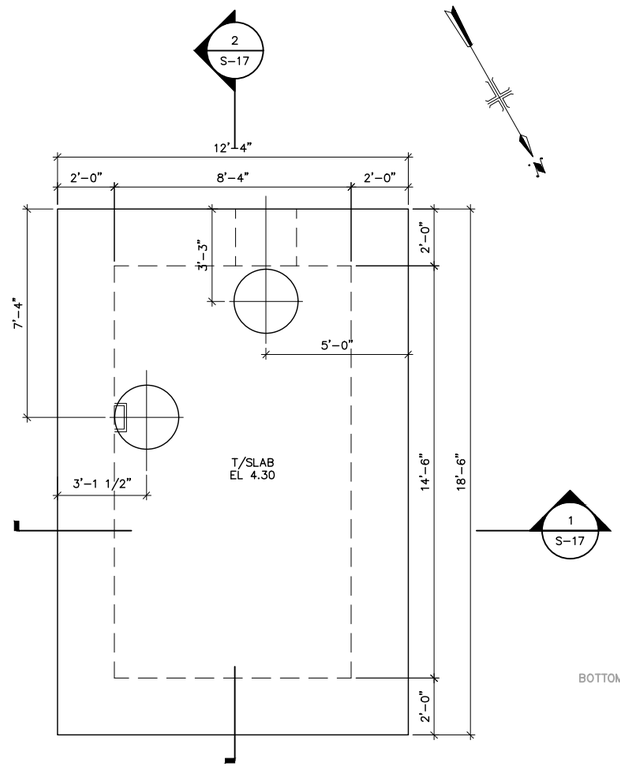

CONNECTION VAULT TOP PLAN

SCALE: 3/8" = 1'-0"

NOTE

REMOVAL AND DISPOSAL OF CONCRETE AND BITUMINOUS MACADAM PAVEMENTS IS COVERED BY ITEMS NOS. 13 AND 14 O SPECIFICATIONS AND IS NOT TO BE INCLUDED IN TRENCH EXCAVATION.

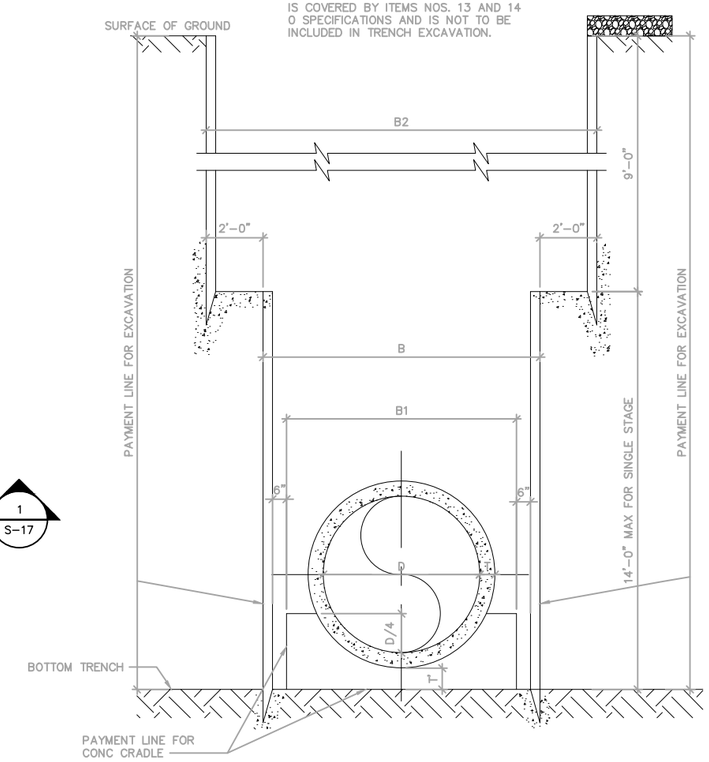

PIPE SIZE	T INCHES	T' INCHES	B FEET	B1 FEET	B2 FEET	EXC PER LIN FT 1 FT DEEP WIDTH "B"	EXC PER LIN FT 1 FT DEEP WIDTH "B2"	CONC IN CRADDLE PER LIN FT WIDTH "B1"
66"	6 1/2"	9"	9.55	8.08	13.58	0.355 C.YDS	0.503 C.YDS	0.484 C.YDS

D = INSIDE DIAMETER OF PIPE IN INCHES
B = WIDTH OF TRENCH FOR EXCAVATION
B1 = WIDTH OF CONCRETE CRADLE
B2 = WIDTH OF TRENCH FOR EXC OVER 14 FT ARE
T = PIPE THICKNESS IN INCHES
T' = DEPTH OF CRADLE BELOW PIPE

TRENCH EXCAVATION AND CONCRETE CRADLE

DETAIL SHOWN ON EXISTING DRAWINGS.

NOTE:

1. DURING EXCAVATION TO CONSTRUCT THE VAULT OVER EXISTING 66" DIA. PIPE AND SADDLE, THE CONTRACTOR SHALL ALLOW FOR REMOVAL ANY LEFT OVER, EXISTING EXCAVATION SUPPORT, IF ENCOUNTERED.

Hazen ARCADIS
A JOINT VENTURE

LEGAL ENTITY:
ARCADIS CE, INC.

SEALS

NASSAU COUNTY, NEW YORK
DEPARTMENT OF PUBLIC WORKS

LONG BEACH WPCP CONSOLIDATION PUMP STATION CONVERSION

LONG BEACH WASTEWATER POLLUTION CONTROL PLANT

NO.	DATE	ISSUED FOR	BY

COPYRIGHT: 2017 HAZEN AND SAWYER/ ARCADIS A JOINT VENTURE

DATE: JULY 2020
PROJECT NO.: 00726790.0001
FILE NAME: S-16
DESIGNED BY: K. PATEL
DRAWN BY: Z. SANGALANG
CHECKED BY: M. VERMA

SHEET TITLE

STRUCTURAL

MISCELLANEOUS DETAILS – I

SCALE: AS SHOWN

S-16

SHEET 49 OF 112

User:SANGALANG Spec: AUS-NCSMOD File: I:\ACAD\PROJ\00726790.0001\SHEETS\S-16.DWG Scale:1:1 SavedDate: 7/8/2020 Time:15:45 Plot Date: Sangalang, Zasima: 7/17/2020; 15:57 ; Layout:LAYOUT1

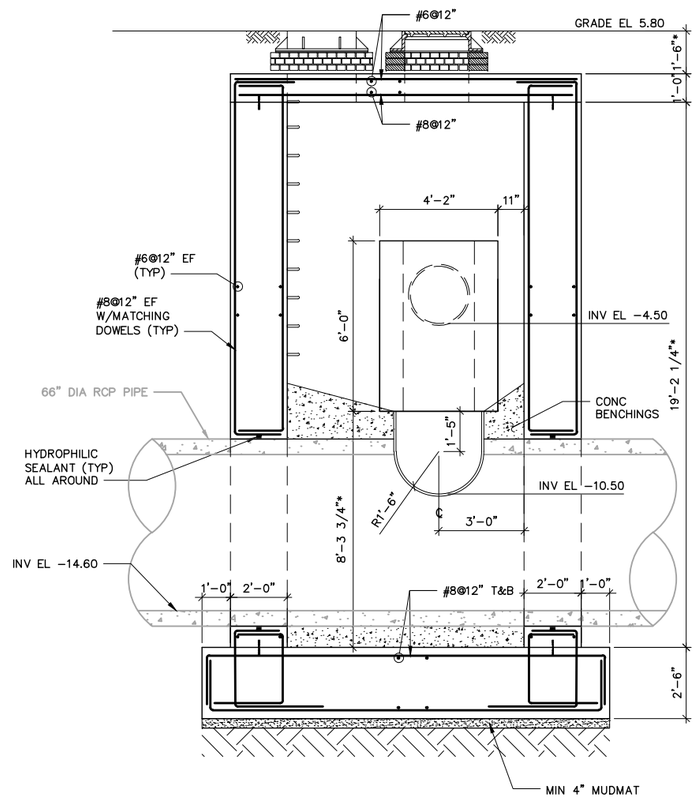

1 S-16 SECTION
3/8" = 1'-0"

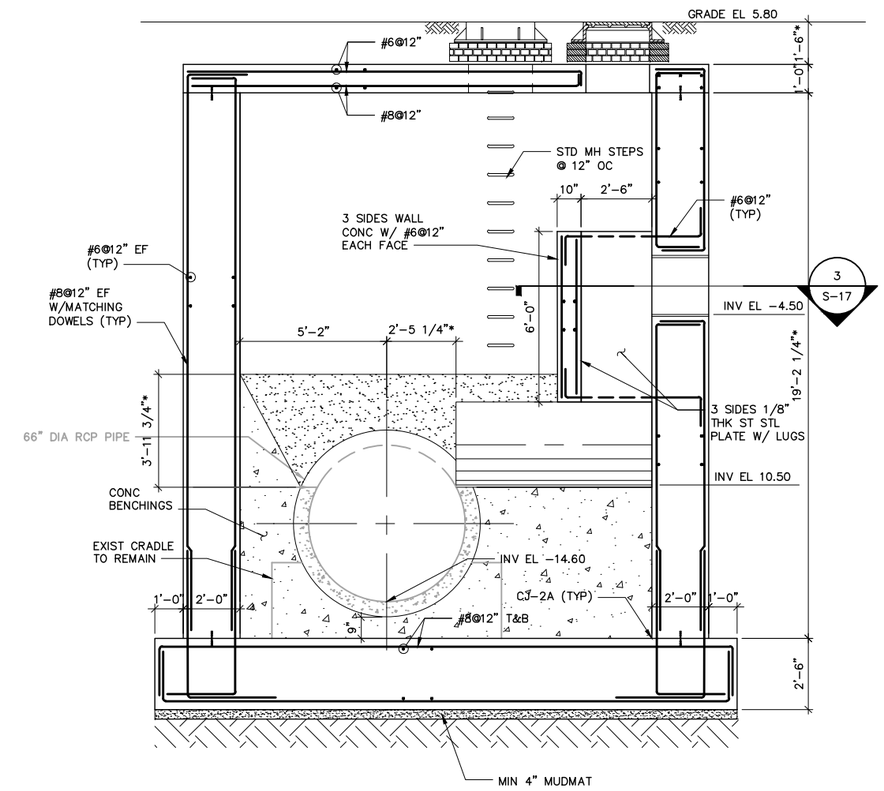

2 S-16 SECTION
3/8" = 1'-0"

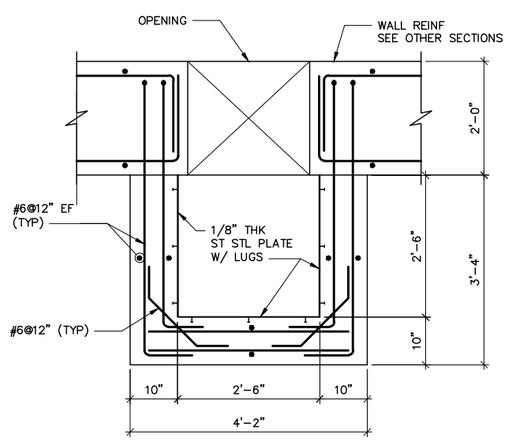

3 S-17 SECTION
3/4" = 1'-0"

NOTE:

1. PROVIDE ADDITIONAL REBAR AROUND OPENINGS PER STANDARDS DETAILS.

Hazen ARCADIS
A JOINT VENTURE

LEGAL ENTITY:
ARCADIS CE, INC.

SEALS

STATE OF NEW YORK
MANIAL VERMA
LICENSED PROFESSIONAL ENGINEER

NASSAU COUNTY, NEW YORK
DEPARTMENT OF PUBLIC WORKS

LONG BEACH WPCP CONSOLIDATION
PUMP STATION CONVERSION

LONG BEACH WASTEWATER POLLUTION CONTROL PLANT

NO.	DATE	ISSUED FOR	BY

COPYRIGHT: 2017 HAZEN AND SAWYER/ ARCADIS A JOINT VENTURE

DATE: JULY 2020
PROJECT NO.: 00726790.0001
FILE NAME: S-17
DESIGNED BY: K. PATEL
DRAWN BY: Z. SANGALANG
CHECKED BY: M. VERMA

SHEET TITLE

STRUCTURAL

MISCELLANEOUS DETAILS – II

SCALE: AS SHOWN

S-17

SHEET 50 OF 112

User:SANGALANG Spec:AUS-NCSMOD File:I:\ACAD\PROJ\00726790.0001\SHEETS\S-17.DWG Scale:1:1 SavedDate:7/8/2020 Time:15:46 Plot Date: Sangalang, Zosimo: 7/17/2020; 15:56 ; Layout:LAYOUT1

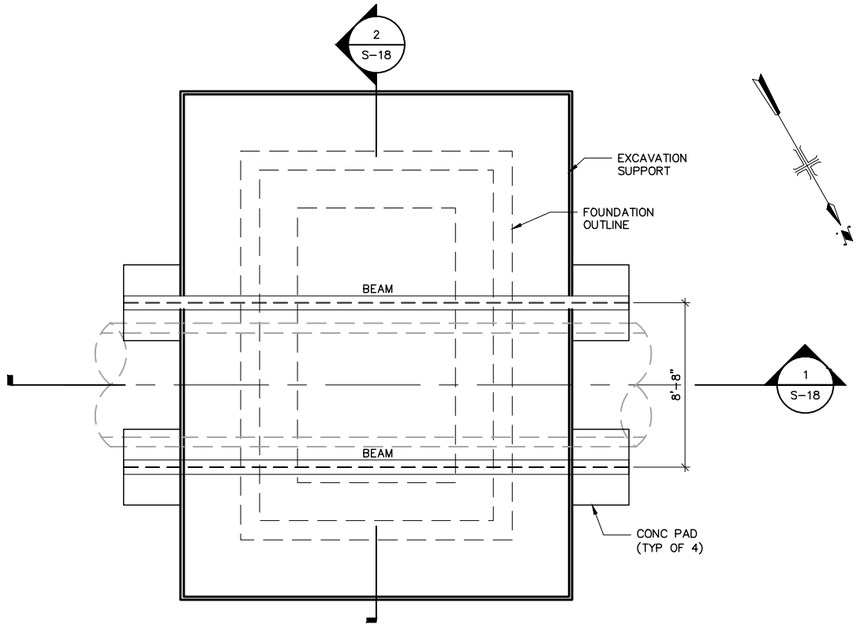

TEMPORARY PIPE SUPPORT PLAN

SCALE: 1/4" = 1'-0"

NOTES ON EXCAVATION & TEMPORARY PIPE SUPPORT SYSTEMS:

1. NEW CONNECTION VAULT IS TO BE BUILT AROUND EXISTING, OPERATIONAL, 66" DIA. CONCRETE PIPE TO FACILITATE CONNECTION WITH NEW 24" DIA. PIPE. THE VAULT WILL SERVE AS AN ACCESS TO THE CONNECTION ALSO.
2. CONTRACTOR SHALL BE RESPONSIBLE FOR DESIGN AND INSTALLATION OF EXCAVATION SUPPORT SYSTEM. THE CONTRACTOR WILL SUBMIT SIGNED AND SEALED, DESIGN CALCULATIONS AND DRAWINGS BY PROFESSIONAL ENGINEER, LICENSED IN NEW YORK STATE.
3. THE CONTRACTOR SHALL BE RESPONSIBLE FOR DESIGN OF TEMPORARY SUPPORT SYSTEM TO SUPPORT THE EXISTING 66" DIA. CONCRETE SEWER PIPE ON EXISTING CONCRETE SADDLE. THE SUPPORT SYSTEM SHALL REMAIN IN PLACE UNTIL THE NEW BASE SLAB FOR VAULT, UNDER THE SADDLE IS POURED AND HAVE BEEN CURED FOR DESIGNED STRENGTH.
4. SUGGESTED EXISTING PIPE SUPPORT AND CONSTRUCTION SEQUENCE:
   - A. INSTALL EXCAVATION SUPPORT SYSTEM AROUND THE LOCATION OF VAULT. AREA SHALL BE ADEQUATE TO INSTALL CONCRETE FORMWORK FOR BASE SLAB AND WALLS.
   - B. EXCAVATE TO THE EXISTING BOTTOM OF SADDLE.
   - C. INSTALL CONTINUOUS SUPPORT PLATES ON EACH SIDE OF EXISTING PIPE SADDLE WITH ADHESIVE ANCHORS. SPACING AND SIZE OF ANCHORS AND PLATE TO BE DESIGNED BY CONTRACTOR'S PROFESSIONAL ENGINEER.
   - D. INSTALL TEMPORARY SUPPORT BEAMS OVER THE EXACTION SUPPORT SYSTEM WITH TEMPORARY FOUNDATIONS TO SUPPORT BEAMS.
   - E. SECURE WITH CABLES, THE SADDLE PLATES TO THE BEAMS. CONTRACTOR'S PROFESSIONAL ENGINEER WILL DESIGN THE WHOLE SUPPORT SYSTEM ASSUMING THAT EXISTING PIPE AND SADDLE IS UNREINFORCED CONCRETE.
   - F. ONCE THE SUPPORT SYSTEM IS INSTALLED AND CHECKED, THE EXCAVATION UNDER THE SADDLE SHALL BE DONE TO INSTALL THE BASE SLAB WITH MUDMAT, UNDER THE SADDLE.
   - G. TEMPORARY SUPPORT SYSTEM CONSISTING OF STEEL BEAMS, CABLES AND STEEL BEAM SUPPORT PADS SHALL BE REMOVED ONCE BASE CONCRETE HAS ACHIEVED DESIGNED STRENGTH.

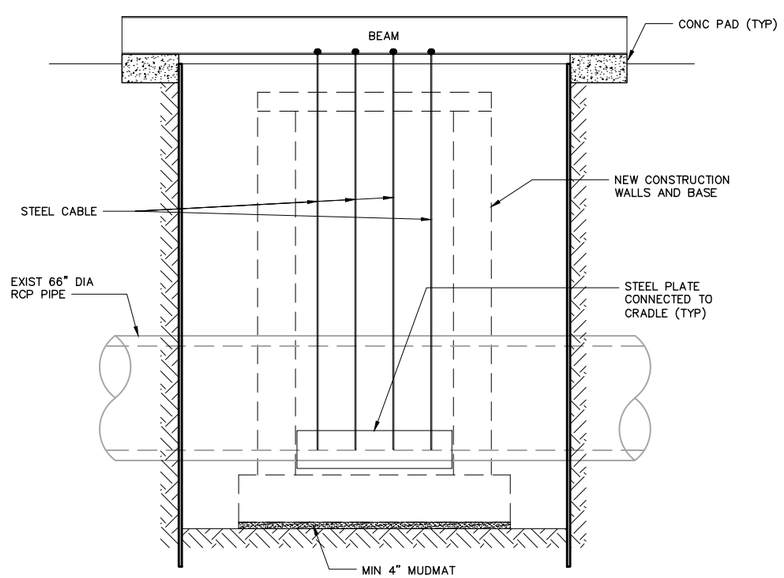

1 S-18 SECTION

1/4" = 1'-0"

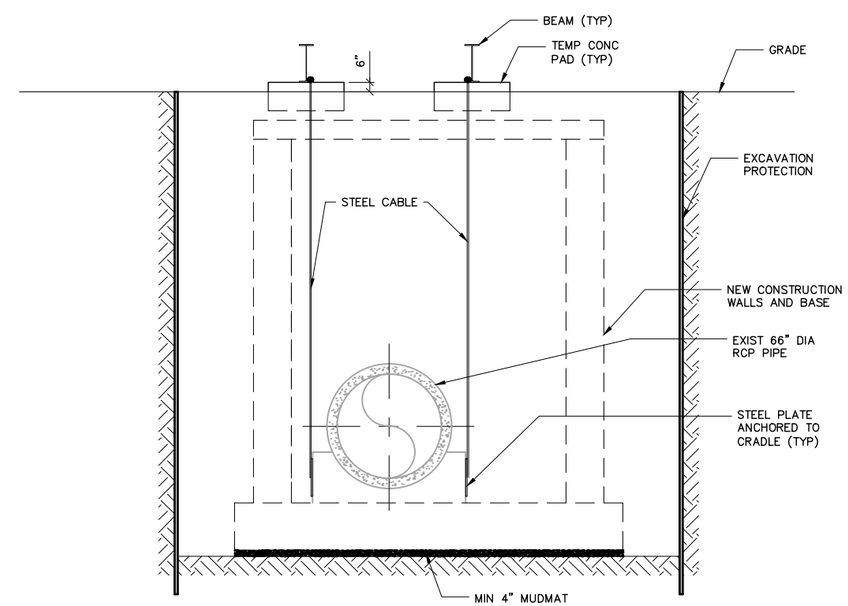

2 S-18 SECTION

1/4" = 1'-0"

Hazen ARCADIS A JOINT VENTURE

LEGAL ENTITY:
ARCADIS CE, INC.

SEALS

NASSAU COUNTY, NEW YORK
DEPARTMENT OF PUBLIC WORKS

LONG BEACH WPCP CONSOLIDATION PUMP STATION CONVERSION

LONG BEACH WASTEWATER POLLUTION CONTROL PLANT

NO.	DATE	ISSUED FOR	BY

COPYRIGHT: 2017 HAZEN AND SAWYER/ ARCADIS A JOINT VENTURE

DATE: JULY 2020
PROJECT NO.: 00726790.0001
FILE NAME: S-18
DESIGNED BY: K. PATEL
DRAWN BY: Z. SANGALANG
CHECKED BY: M. VERMA

SHEET TITLE

STRUCTURAL

MISCELLANEOUS DETAILS – III

SCALE: AS SHOWN

S-18

SHEET 51 OF 112

User:SANGALANG Spec:AUS-NCSMOD File:I:\ACAD\PROJ\00726790.0001\SHEETS\S-18.DWG Scale:1:1 SavedDate:7/8/2020 Time:15:47 Plot Date: Sangalang, Zosimo; 7/17/2020; 15:55 ; Layout:LAYOUT1

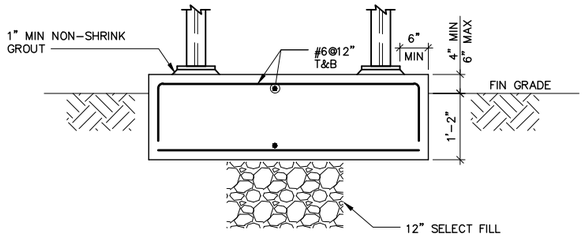

TYPICAL FOUNDATION AT PRE-ENGINEERED METAL STAIRS

NOT TO SCALE

NOTE:

1. CONTRACTOR TO COORDINATE SLAB DIMENSIONS WITH MANUFACTURERS REQUIREMENTS. PROVIDE MINIMUM 6" (UON) SLAB PROJECTION ON ALL FOUR SIDES OF EQUIPMENT.

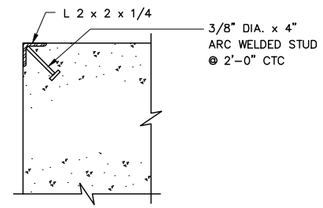

TYPICAL CORNER GUARD DETAIL

NOT TO SCALE

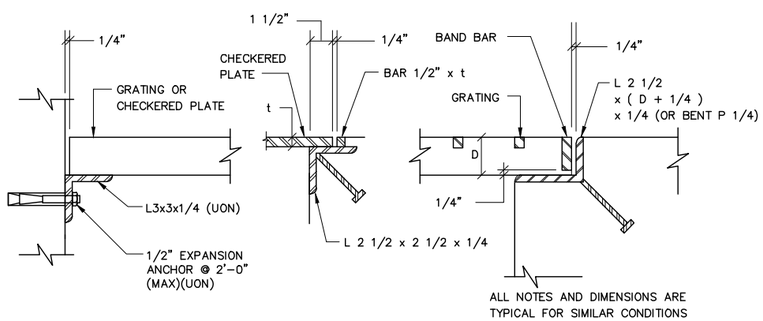

TYPICAL GRATING AND CHECKERED PLATE SUPPORT DETAILS

NOTES:

1. PROVIDE TYPICAL SUPPORT AS SHOWN FOR ALL GRATING AND PLATE SUPPORT.
2. PROVIDE SUPPORT ANGLE AND ANCHOR STUD OF THE SAME MATERIAL AS THE GRATING AND PLATE.

REINFORCING LAP SPLICE & EMBEDMENT LENGTH							
BAR SIZE	MIN LAP LENGTH (IN)				MIN EMBEDMENT LENGTH (IN)		
	TOP BARS		OTHER BARS		STRAIGHT BARS		WITH STD HOOK
	CLASS		CLASS		TOP BARS	OTHER BARS	
	A	B	A	B			
SLABS & WALLS WITH 2" + COVER							
#3	16	21	12	16	16	12	6
#4	16	21	12	16	16	12	7
#5	20	25	15	19	20	15	9
#6	24	30	18	23	24	18	10
#7	33	43	25	33	33	25	12
#8	38	49	29	37	38	29	14
#9	49	63	37	48	49	37	15
#10	60	78	46	60	60	46	17
#11	75	97	57	74	75	57	19
SLABS & WALLS WITH < 2" COVER							
#3	16	21	12	16	16	12	8
#4	16	21	12	16	16	12	10
#5	20	25	15	19	20	15	12
#6	24	30	18	23	24	18	15
#7	38	49	29	37	38	29	17
#8	47	62	36	47	47	36	19
#9	58	76	44	58	58	44	22
#10	71	91	54	70	71	54	25
#11	85	110	65	84	85	65	27
BEAMS & COLUMNS WITH 3.75" CLEAR SPACING **							
#3	16	21	12	16	16	12	6
#4	16	21	12	16	16	12	7
#5	20	25	15	19	20	15	9
#6	24	30	18	23	24	18	10
#7	33	43	25	33	33	25	12
#8	39	51	30	39	39	30	14
#9	50	64	38	49	50	38	15
#10	60	78	46	60	60	46	17
#11	72	94	55	72	72	55	19

** FOR BAR CLEAR SPACING LESS THAN 3.75", ADD 46%
FOR BAR CLEAR SPACING LESS THAN 2.25", ADD 104%

REINFORCEMENT LAP SPLICE AND EMBEDMENT LENGTHS IN MASONRY		
BAR SIZE	EMBEDMENT LENGTH	MIN LAP LENGTHS
#3	16	19
#4	21	25
#5	26	31
#6	46	57

LAP SPLICE AND EMBEDMENT LENGTHS ARE BASED ON A MINIMUM MASONRY COMPRESSIVE STRENGTH OF 1500 PSI AND 60000 PSI FOR REINFORCEMENT (WITH NO EPOXY COATING).

NOTES:

1. NOTES FOR SPLICE AND EMBEDMENT TABLE:
   A) THE MINIMUM LENGTH OF LAPS FOR SPLICES SHALL BE AS GIVEN IN THE TABLE FOR CLASS "B" LAPS UNLESS SHOWN OTHERWISE ON THE DRAWINGS. PROVIDE CLASS "A" LAPS ONLY WHERE NOTED ON THE DRAWINGS.
   B) THE SPLICE AND EMBEDMENT LENGTHS FOR WALLS AND SLABS ARE BASED ON A 5" MINIMUM ON CENTER BAR SPACING. SEE THE DRAWINGS FOR SPLICE AND EMBEDMENT WHERE BARS ARE SPACED CLOSER THAN 5".
   C) HOOK EMBEDMENTS APPLY ONLY WHERE THE SIDE COVER (NORMAL TO THE HOOK PLANE) IS AT LEAST 2.5". THE COVERS REFERENCED ON THE TABLE ARE FROM THE HOOK EXTENSION TO THE FACE OF THE CONCRETE.
   D) THE TABLE DOES NOT APPLY TO LIGHTWEIGHT CONCRETE OR EPOXY COATED REINFORCING BARS. SEE ACI 318 FOR APPROPRIATE ADDITIONAL MULTIPLIERS FOR THOSE CASES.
2. WHERE SPLICES ARE REQUIRED BETWEEN BARS OF DIFFERENT SIZES, THE LAP LENGTH SHALL BE NO LESS THAN THE EMBEDMENT LENGTH OF THE LARGER BAR OR THE LAP LENGTH OF THE SMALLER BAR, WHICHEVER IS GREATER.
3. VERTICAL REINFORCEMENT FOR CONCRETE SHALL BE SPLICED WITH DOWEL BARS OF THE SAME SIZE AND SPACING FROM THE FOUNDATION USING A LAP LENGTH.
4. DOWELS SHOWN EXTENDING FROM PREVIOUSLY PLACED CONCRETE SHALL EXTEND ONE SPLICE LENGTH BEYOND THE JOINT, UNLESS DIMENSIONED OTHERWISE. WHERE A DIMENSION IS PROVIDED, THE BAR SPLICING TO THE DOWEL SHALL END ONE SPLICE LENGTH FROM THE END OF THE DOWEL.

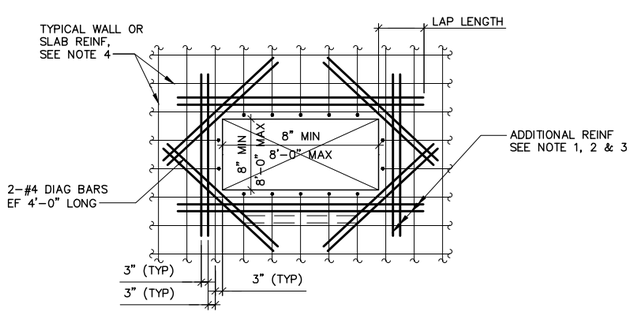

RECTANGULAR

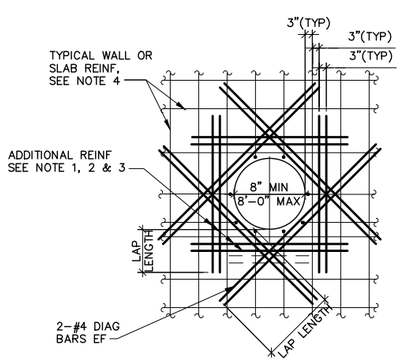

CIRCULAR

NOTES:

1. PROVIDE ADDITIONAL REINFORCEMENT AT EACH SIDE OF ALL OPENINGS, ACCESS HATCHES, PIPE PENETRATIONS, ETC. EQUAL IN AREA TO 1/2 OR MORE THE AREA OF REINFORCEMENT CUT BY OPENING IN EACH DIRECTION. ADDITIONAL REINFORCEMENT TO MATCH SIZE OF TYPICAL REINFORCEMENT (MIN. 2 BARS ES AND EF) AND PLACED BETWEEN TYPICAL REINFORCEMENT @3" SPACING ON EACH SIDE OF OPENING. IF A WALL OR BEAM IS ADJACENT TO THE OPENING, THE ADDITIONAL REINFORCEMENT ON THAT SIDE OF THE OPENING CAN BE OMITTED.
2. ANY OPENING 6" OR LESS TO AN ADJACENT WALL DOES NOT REQUIRE ADDITIONAL REINFORCEMENT AT THAT SIDE OF OPENING.
3. PROVIDE MATCHING DOWELS WHERE REQUIRED TO PROVIDE CLASS "B" LAP WITH ADDITIONAL REINFORCEMENT. (WHERE LAPPING OF ADDITIONAL REINFORCEMENT FROM ADJACENT OPENINGS OCCUR, ADDITIONAL REINFORCEMENT SHALL BE COMBINED).
4. PROVIDE STANDARD HOOK AT END OF ALL BARS TERMINATING AT OPENING.
5. DO NOT WELD REINFORCEMENT TO PIPE SLEEVES OR INSERTS.

REINFORCING AROUND OPENING IN WALL AND SLAB

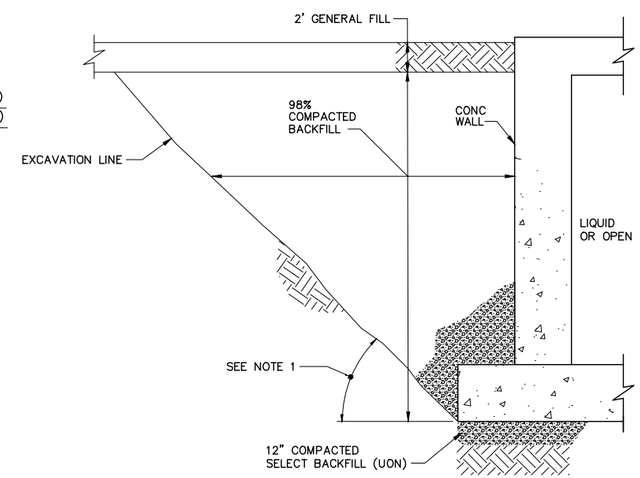

TYPICAL CONCRETE WALL BACKFILL DETAIL

NOTES:

1. REFER TO GEOTECHNICAL INVESTIGATION REPORT AND SPECIFICATIONS FOR EXCAVATION AND BACKFILL REQUIREMENTS.
2. TYPICAL BACKFILL REQUIREMENTS FOR ALL BELOW GRADE STRUCTURES WITH BACKFILL ON ONE SIDE AND LIQUID OR OPEN ON THE OTHER SIDE.

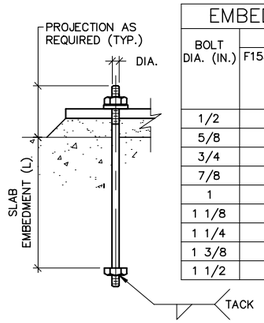

EMBEDMENT CHART		
BOLT DIA. (IN.)	L (IN.)	
	F1554 GRADE A36 A582 TYPE 304 TYPE 316	F1554 GRADE 105
1/2	6	8 1/2
5/8	7 1/2	11
3/4	9	13
7/8	10 1/2	15
1	12	17
1 1/8	13 1/2	19 1/2
1 1/4	15	21 1/2
1 3/8	16 1/2	23 1/2
1 1/2	18	25 1/2

TYPICAL ANCHOR BOLT DETAIL

NOTE:

1. REFER TO SPECIFICATIONS FOR ANCHOR BOLT MATERIAL REQUIREMENTS.

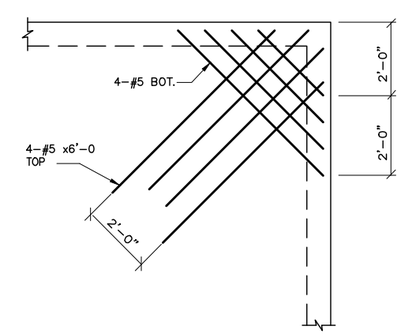

SLAB ON BEARING WALL

Hazen ARCADIS
A JOINT VENTURE

LEGAL ENTITY:
ARCADIS CE, INC.

SEALS

NASSAU COUNTY, NEW YORK
DEPARTMENT OF PUBLIC WORKS

LONG BEACH WPCP CONSOLIDATION PUMP STATION CONVERSION

LONG BEACH WASTEWATER POLLUTION CONTROL PLANT

NO.	DATE	ISSUED FOR	BY

COPYRIGHT: 2017 HAZEN AND SAWYER/ ARCADIS A JOINT VENTURE

DATE: JULY 2020
PROJECT NO.: 00726790.0001
FILE NAME: S-19
DESIGNED BY: C. BROADBENT
DRAWN BY: Z. SANGALANG
CHECKED BY: M. VERMA

SHEET TITLE
STRUCTURAL
TYPICAL DETAILS I

SCALE: NTS

S-19
SHEET 52 OF 112

User:SANGALANG Spec:AUS-NCSMOD File:I:\ACAD\PROJ\00726790.0001\SHEETS\S-19.DWG Scale:1:1 SavedDate:7/8/2020 Time:15:48 Plot Date: Sangalang, Zosimo; 7/17/2020; 15:53 ; Layout:LAYOUT1

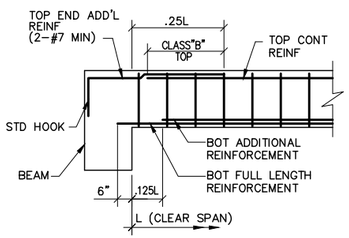

TYP BEAM TO BEAM

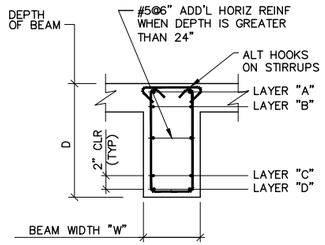

TYP BEAM SECTION

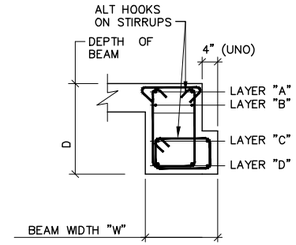

TYP STAIR BEAM SECTION

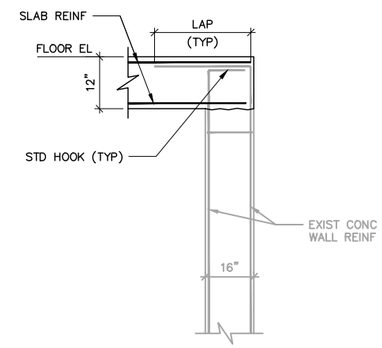

TYPICAL EXIST WALL TO SLAB CONNECTION DETAIL

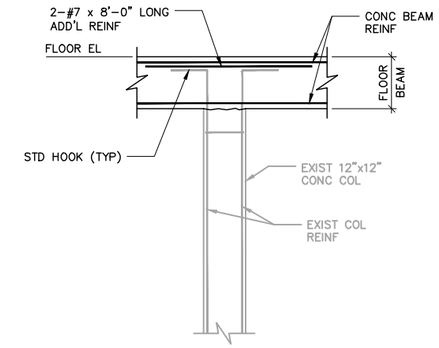

TYPICAL EXIST COLUMN TO CONC BEAM CONNECTION DETAIL

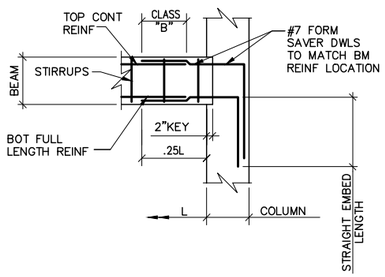

TYPICAL KEYED CONNECTION DETAIL

* USE ONLY AS NOTED ON THE SCHEDULE

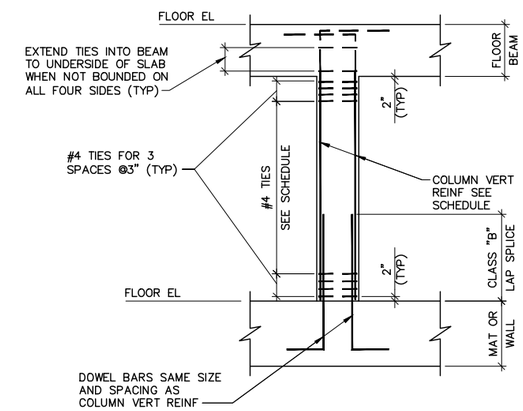

TYPICAL COLUMN ELEVATION

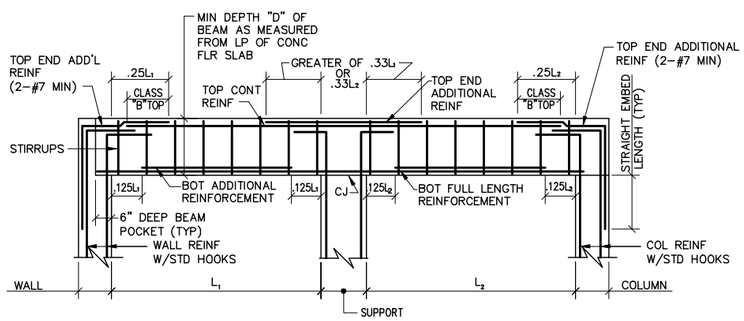

TYP BEAM ELEVATION

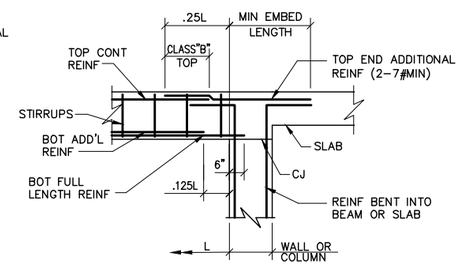

TYP BEAM TO WALL/COLUMN WITH ADJACENT SLAB

TYPICAL REINFORCED CONCRETE BEAM DETAILS

TYPICAL CONCRETE BEAM NOTES:

1. UNLESS OTHERWISE NOTED, REINFORCING STEEL IS IN LAYERS (A) AND (D).
2. SEE PLAN AND SECTIONS FOR SPECIFIC BEAM REQUIREMENTS.
3. BOTTOM BARS ARE TO BE CONTINUOUS FROM BEAM POCKET TO BEAM POCKET.
4. FOR GENERAL CONCRETE NOTES, SEE SHT. S00-01.
5. PLACE FIRST STIRRUP AT 2" FROM SUPPORT FACE, EACH END.
6. WHERE BOTTOM BARS ARE NOTED TO BE CONTINUOUS, PROVIDE CLASS "B" LAP SPLICE CENTERED OVER SUPPORT.
7. WHERE TOP BARS ARE NOTED TO BE CONTINUOUS, PROVIDE CLASS "B" TOP LAP SPLICE CENTERED ON BEAM MIDSPAN.

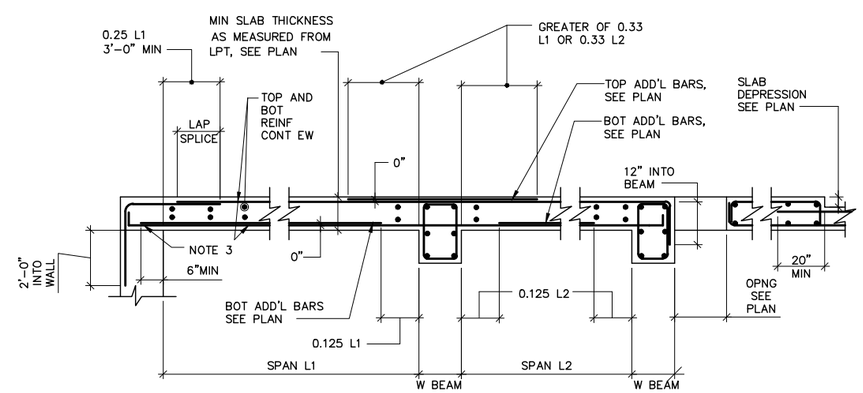

NOTES:

1. TOP BARS SPLICE AT MID-SPAN.
2. BOTTOM BARS SPLICE AT SUPPORTS.
3. HOOK BOTTOM CONTINUOUS BARS. IF STD HOOK DOES NOT FIT, ROTATE HOOK TO FIT AND/OR USE 180° HOOK.

TYPICAL CONCRETE SLAB DETAIL

Hazen ARCADIS
A JOINT VENTURE

LEGAL ENTITY:
ARCADIS CE, INC.

SEALS

NASSAU COUNTY, NEW YORK
DEPARTMENT OF PUBLIC WORKS

LONG BEACH WPCP CONSOLIDATION
PUMP STATION CONVERSION

LONG BEACH WASTEWATER POLLUTION CONTROL PLANT

NO.	DATE	ISSUED FOR	BY

COPYRIGHT: 2017 HAZEN AND SAWYER/ ARCADIS A JOINT VENTURE

DATE:	JULY 2020
PROJECT NO.:	00726790.0001
FILE NAME:	S-20
DESIGNED BY:	C. BROADBENT
DRAWN BY:	Z. SANGALANG
CHECKED BY:	M. VERMA

SHEET TITLE

STRUCTURAL

TYPICAL DETAILS II

SCALE: AS SHOWN

S-20

SHEET 53 OF 112

User:SANGALANG Spec:AUS-NCSMOD File:I:\ACAD\PROJ\00726790.0001\SHEETS\S-20.DWG Scale:1:1 SavedDate: 7/8/2020 Time:15:49 Plot Date: Sangalang, Zasimo; 7/17/2020; 15:52 ; Layout:LAYOUT1

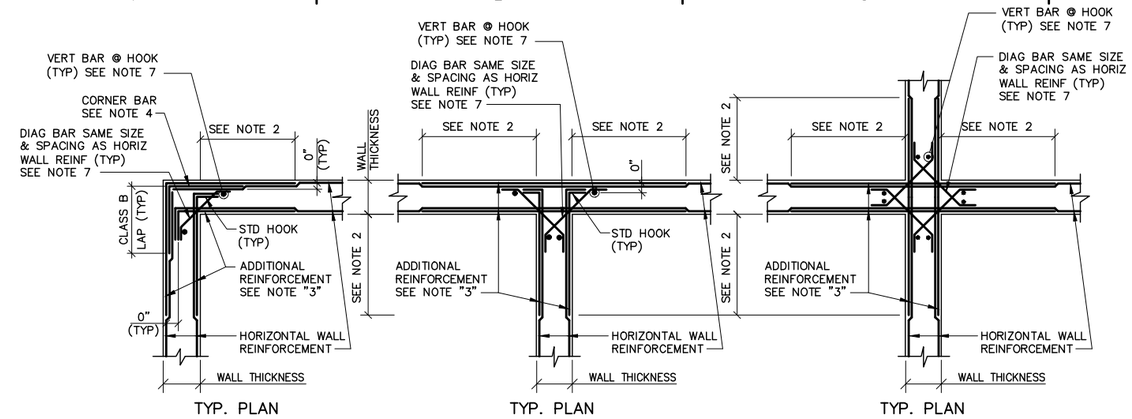

TYPICAL REINFORCEMENT DETAIL AT WALL INTERSECTIONS

NOTES:

1. PROVIDE ADDITIONAL REINFORCING AT ALL WALL INTERSECTIONS AS SHOWN ABOVE U.O.N. ON DWGS.
2. DIMENSION TO BE 0.25 TIMES THE CLEAR SPAN DISTANCE BETWEEN WALL INTERSECTIONS MEASURED HORIZONTALLY, BUT NOT LESS THAN 4'–0", NOR GREATER THAN 8'–0".
3. ADDITIONAL REINFORCEMENT TO MATCH SIZE AND SPACING OF WALL HORIZONTAL REINFORCEMENT (U.O.N.). ALTERNATE ADDITIONAL REINFORCEMENT WITH HORIZONTAL WALL REINFORCEMENT.
4. PROVIDE CORNER BAR REINFORCING AT ALL WALL CORNERS AS SHOWN. CORNER BAR REINFORCEMENT TO MATCH SIZE AND SPACING OF WALL HORIZONTAL REINFORCEMENT.
5. WHERE LAPPING OF ADDITIONAL REINFORCEMENT FROM ADJACENT WALL INTERSECTION OCCURS, REINFORCEMENT SHALL BE COMBINED.
6. TYPICAL WALL INTERSECTION DETAILS ARE SHOWN AT 90 DEGREES, BUT ARE APPLICABLE FROM 60 TO 120 DEGREES.
7. DIAGONAL BAR IS ONLY REQUIRED FOR LIQUID CONTAINING STRUCTURES.

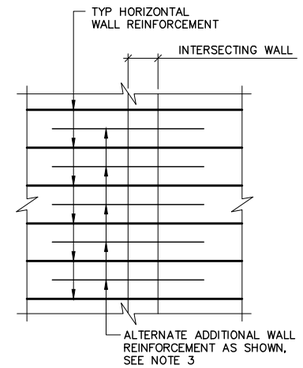

TYPICAL WALL ELEVATION AT WALL INTERSECTION

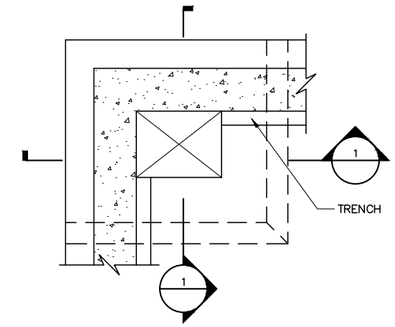

PLAN

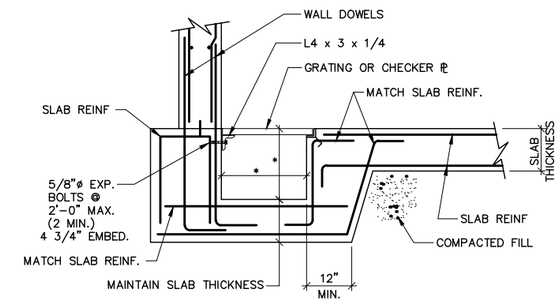

1 SECTION

TYPICAL SUMP DETAIL

NOT TO SCALE

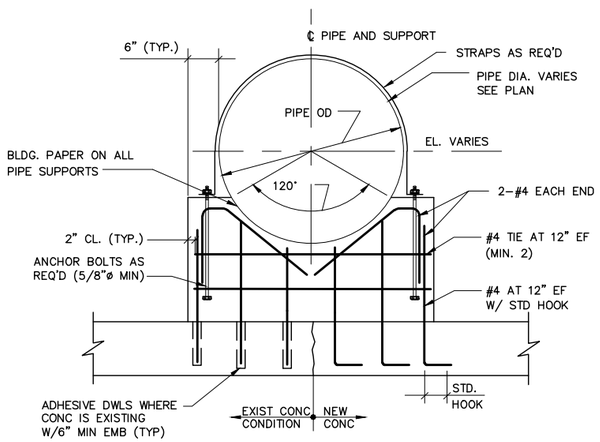

TYPICAL CONCRETE PIPE SUPPORT DETAIL

NOT TO SCALE

NOTES:

1. SUPPORT TO BE 12" THICK. (U.O.N.)
2. COORDINATE LOCATION OF PIPE SUPPORTS WITH OTHER SHEETS AND SPECIFICATIONS.

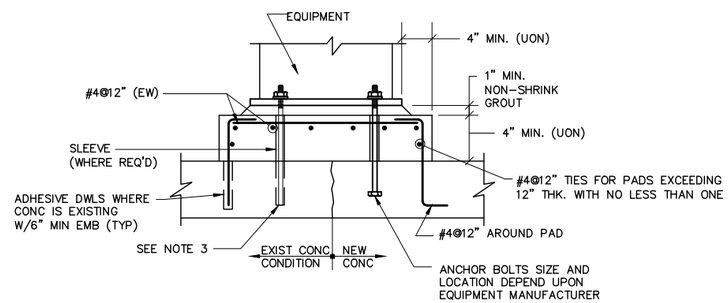

TYPICAL EQUIPMENT SUPPORT PAD DETAIL

NOTES:

1. PROVIDE TYP. 4" MINIMUM CONCRETE SUPPORT PAD FOR ALL EQUIPMENT UNLESS OTHERWISE NOTED.
2. COORDINATE LOCATION AND SIZE OF PADS WITH OTHER DRAWINGS AND MANUFACTURER'S CERTIFIED DRAWINGS.
3. FOR EXISTING SLABS, DRILL HOLE DIAMETER AND DEPTH IN EXISTING SLAB PER EQUIPMENT MANUFACTURER'S REQUIREMENTS FOR ADHESIVE ANCHORAGE SYSTEM USED.
4. SEE ELECTRICAL SHEETS FOR OTHER SPECIFIC ELECTRICAL EQUIPMENT PAD REQUIREMENTS AND EMBEDDED ITEMS.

TRENCH DRAIN AT WALL

NOT TO SCALE

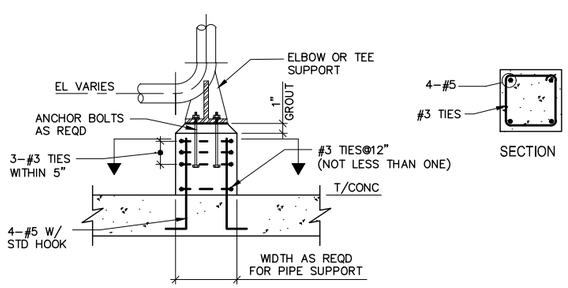

CONCRETE PEDESTAL DETAIL

SCALE: NO SCALE

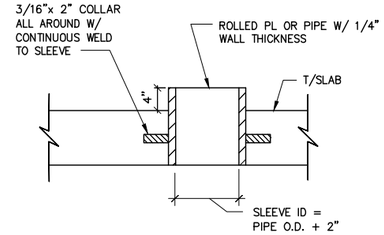

TYPICAL SLAB PIPE SLEEVE DETAIL

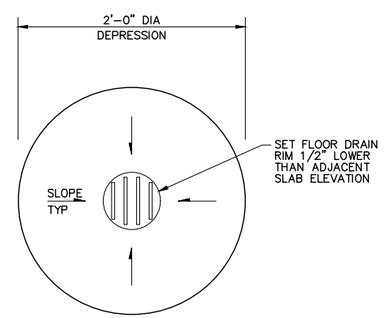

FLOOR DRAIN

Hazen ARCADIS A JOINT VENTURE

LEGAL ENTITY:
ARCADIS CE, INC.

SEALS

NASSAU COUNTY, NEW YORK
DEPARTMENT OF PUBLIC WORKS

LONG BEACH WPCP CONSOLIDATION PUMP STATION CONVERSION

LONG BEACH WASTEWATER POLLUTION CONTROL PLANT

NO.	DATE	ISSUED FOR	BY

COPYRIGHT: 2017 HAZEN AND SAWYER/ ARCADIS A JOINT VENTURE

DATE:	JULY 2020
PROJECT NO.:	00726790.0001
FILE NAME:	S–21
DESIGNED BY:	C. BROADBENT
DRAWN BY:	Z. SANGALANG
CHECKED BY:	M. VERMA

SHEET TITLE

STRUCTURAL

TYPICAL DETAILS III

SCALE: NTS

S–21

SHEET 54 OF 112

User:SANGALANG Spec:AUS–NCSMOD File:I:\ACAD\PROJ\00726790.0001\SHEETS\S–21.DWG Scale:1:1 SavedDate:7/8/2020 Time:15:50 Plot Date: Sangalang, Zasimo; 7/17/2020; 15:50 ; Layout:LAYOUT1

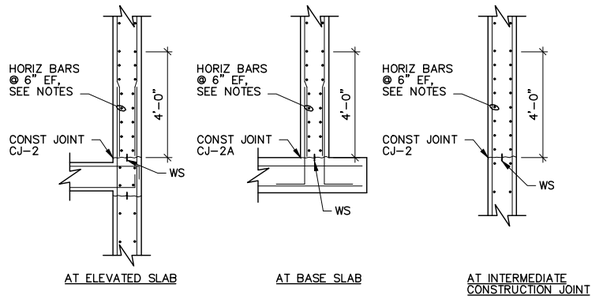

NOTES:
1. PROVIDE HORIZONTAL BARS AT 6" SPACING EACH FACE IN THE FIRST 4'-0" ABOVE ALL HORIZONTAL WALL CONSTRUCTION JOINTS IN LIQUID CONTAINING AND BELOW-GRADE STRUCTURES. WHERE TYPICAL WALL HORIZONTAL BARS ARE AT 12" SPACING, PROVIDE ADDITIONAL BARS FOR 6" SPACING.
2. HORIZONTAL BAR SIZE FOR THE 4'-0" ZONE SHALL BE THE TYPICAL WALL HORIZONTAL BAR SIZE SHOWN ON THE DRAWINGS OR THE MINIMUM BAR SIZE IN THE TABLE BELOW, WHICHEVER IS GREATER.

WALL THICKNESS (INCHES)	MINIMUM BAR SIZE
10	#5
12, 14	#6
16, 18, 20	#7
>22	#8

3. PROVIDE CORNER BARS AT 6" SPACING EACH FACE TO LAP WITH THE BARS SHOWN ABOVE

REINFORCING AT HORIZONTAL CONSTRUCTION JOINT

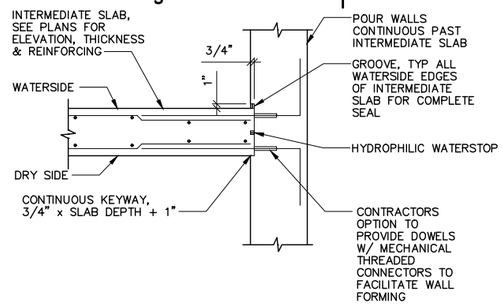

SLAB CONSTRUCTION JOINT AT WALL

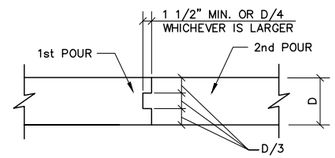

SECTION

TYPICAL BEAM & STRUCTURAL SLAB CONSTRUCTION JOINT DETAIL

NOTES:
1. CARRY ALL REINFORCING THROUGH JOINT.
2. CONSTRUCTION JOINTS, WHEN REQUIRED, ARE TO BE LOCATED AT POINTS OF ZERO SHEAR, NO CONSTRUCTION JOINT WILL BE ALLOWED IN ANY BEAM OR SLAB CARRYING CONCENTRATED LOADS.

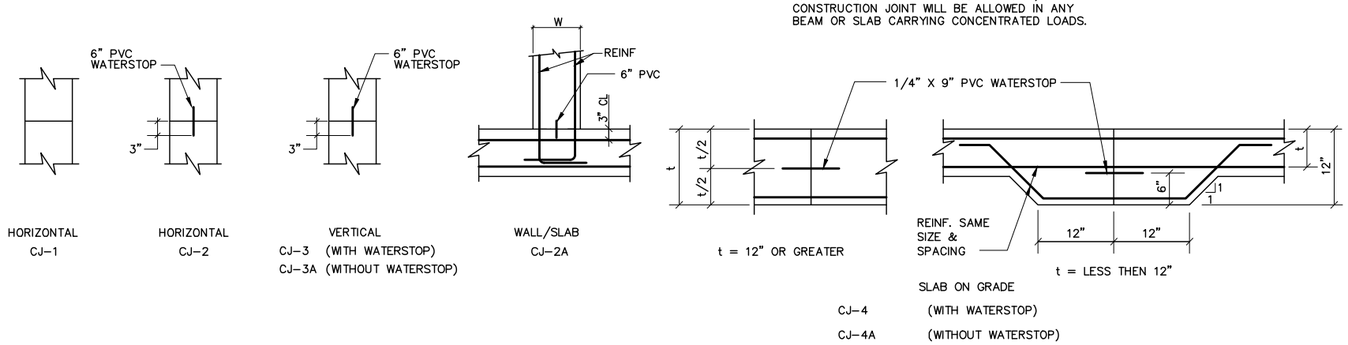

TYPICAL CONSTRUCTION JOINT DETAILS

NOTES:
1. CONTINUE ALL REINFORCEMENT BARS THRU JOINTS.
2. ALL WALL VERTICAL CONSTRUCTION JOINTS TO BE CJ-3 U.O.N.
3. PLACE NEW CONCRETE STRUCTURE AFTER PVC WATERSTOP HAS BEEN GROUTED IN PLACE.

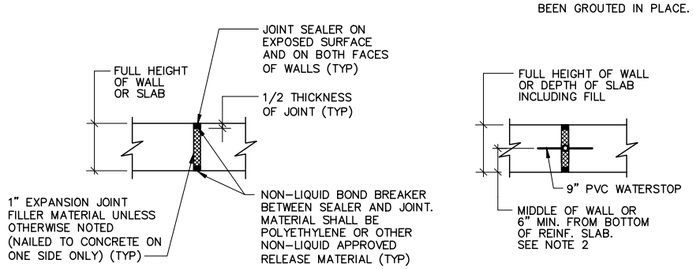

TYPICAL EXPANSION JOINT DETAILS

NOTES:
1. FOR SLAB ON GRADE W/THICKNESS LESS THAN 12" THICKEN THE SLAB AS SHOWN FOR CJ-4.
2. WATERSTOP FOR EJ & CJ SHALL BE AT SAME ELEVATION.
3. DISCONTINUE ALL REINFORCEMENT BARS AT EXPANSION JOINTS.

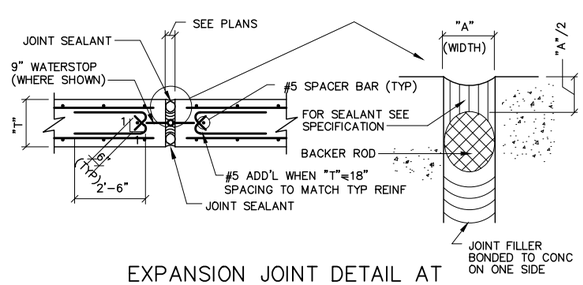

EXPANSION JOINT DETAIL AT WALLS AND SLABS

NOTE:
BACKER ROD AND JOINT SEALANT AT BOTTOM OF SLAB ON GRADE NOT REQUIRED.

STIFFENER SCHEDULE	LL = 150 PSF MAX DEFL = SPAN/360 (= 1/4")
PLATE SPAN	FLAT BAR
1'-7" TO 4'-0"	1/4 X 2
4'-1" TO 5'-0"	1/4 X 2 1/2
5'-1" TO 5'-8"	1/4 X 3
5'-9" TO 7'-4"	5/16 X 3 1/2
7'-5" TO 8'-3"	5/16 X 4

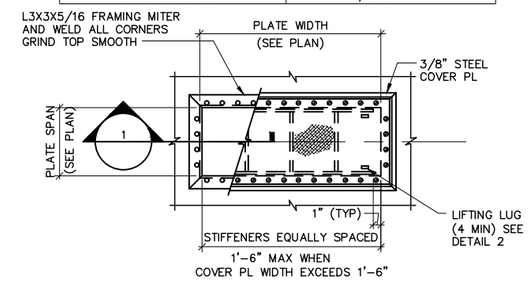

PLAN

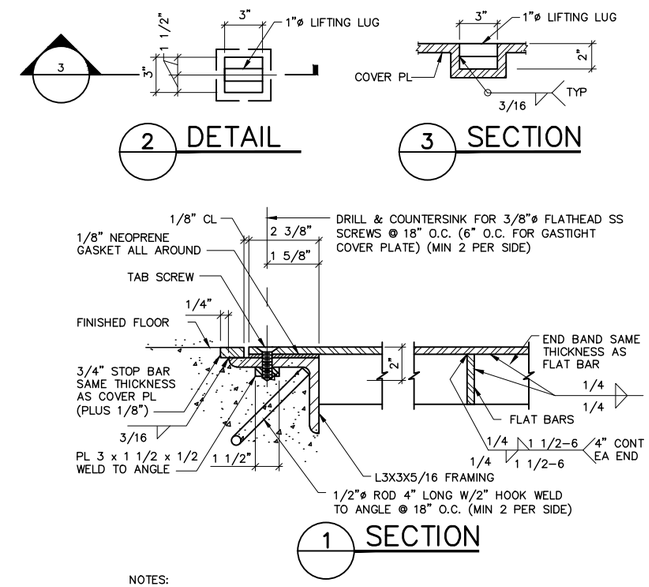

NOTES:
1. COVER PL & COMPONENTS TO BE GALVANIZED.
2. ALL ANGLES, ANCHORS, STOP BARS & STIFF PL'S SHALL BE SAME MATERIAL AS COVER PLATE.

STEEL COVER PLATE DETAILS

Hazen ARCADIS
A JOINT VENTURE

LEGAL ENTITY:
ARCADIS CE, INC.

SEALS

NASSAU COUNTY, NEW YORK
DEPARTMENT OF PUBLIC WORKS

LONG BEACH WPCP CONSOLIDATION PUMP STATION CONVERSION

LONG BEACH WASTEWATER POLLUTION CONTROL PLANT

NO.	DATE	ISSUED FOR	BY

COPYRIGHT: 2017 HAZEN AND SAWYER/ ARCADIS A JOINT VENTURE

DATE:	JULY 2020
PROJECT NO.:	00726790.0001
FILE NAME:	S-22
DESIGNED BY:	C. BROADBENT
DRAWN BY:	Z. SANGALANG
CHECKED BY:	M. VERMA

SHEET TITLE
STRUCTURAL
TYPICAL DETAILS IV

SCALE: NTS

S-22
SHEET 55 OF 112

User:SANGALANG Spec:AUS-NCSMOD File:I:\ACAD\PROJ\00726790.0001\SHEETS\S-22.DWG Scale:1:1 SavedDate:7/8/2020 Time:15:51 Plot Date: Sangalang, Zosimo; 7/17/2020; 15:49 ; Layout:LAYOUT1

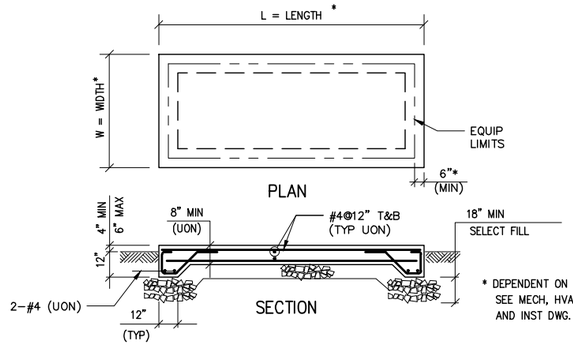

EXTERIOR EQUIPMENT PAD

NOTES:

1. CONTRACTOR TO COORDINATE SLAB DIMENSIONS WITH MANUFACTURERS REQUIREMENTS. PROVIDE MINIMUM 6" (UON) SLAB PROJECTION ON ALL FOUR SIDES OF EQUIPMENT.
2. SLOPE SLAB PROJECTION TO DRAIN.

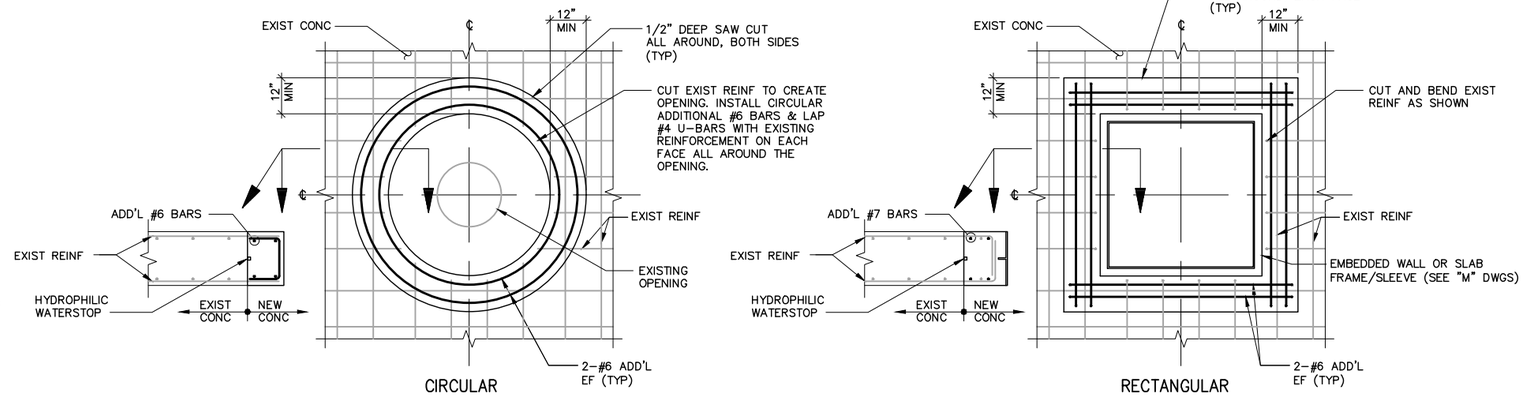

TYPICAL OPENING REINFORCING DETAILS IN EXISTING WALLS AND SLABS

NOTES:

1. SAW CUT EXTENTS OF DEMOLITION AND CHIP OUT CONCRETE WITHOUT DAMAGING EXISTING REBAR.
2. MECHANICALLY CLEAN SUBSTRATE TO FREE SURFACE OF OIL, GREASE, PAINT, CORROSION, DEPOSITS, DUST, LAITANCE OR OTHER SURFACE CONTAMINANTS.
3. MECHANICALLY CLEAN ALL EXISTING REINFORCEMENT, TO REMOVE ANY CORROSION, RUST OR OTHER IMPURITIES.
4. ALL EXPOSED STEEL DURING DEMOLITION SHALL BE COATED WITH ANTI-CORROSION COATING.
5. ROUGHEN CONCRETE SURFACE TO AN AMPLITUDE OF 1/4".
6. APPLY EPOXY BONDING AGENT TO ALL EXIST. CONC. SURFACES. PRIOR TO CONCRETE PLACEMENT.
7. FOR CIRCULAR OPENINGS PROVIDE 3-#6 ADD'L "U" BARS ALL AROUND CIRCULAR OPENING.

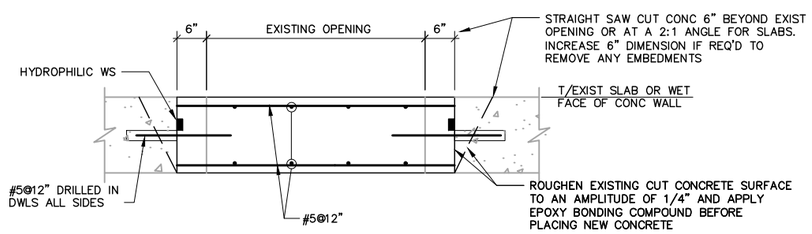

TYPICAL EXISTING OPENING CLOSURE DETAIL

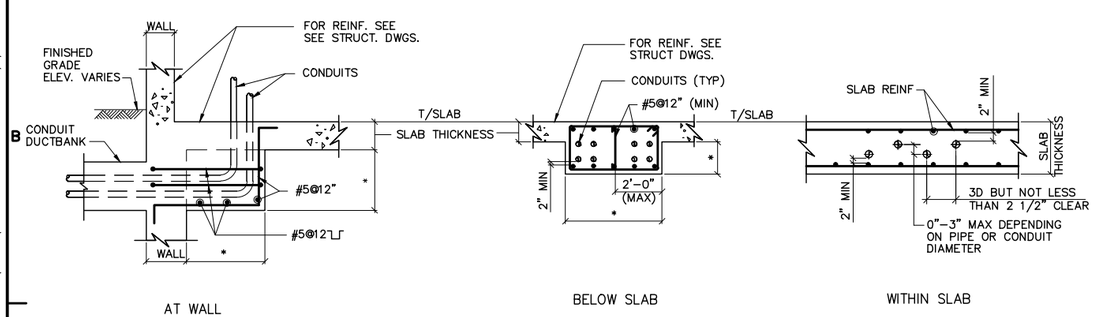

TYPICAL CONDUIT ENCASEMENT DETAILS

NOTES:

1. *** INDICATES DIMENSION AS REQUIRED FOR APPROVED EQUIPMENT
2. D = PIPE OR CONDUIT OUTSIDE DIAMETER
3. OUTSIDE DIMENSION (D) OF ANY EMBEDDED ITEM SHOULD NOT EXCEED 1/3 THE CONCRETE MEMBER THICKNESS
4. AT POINTS OF CROSSING CONDUITS/PIPES, OUTSIDE DIMENSION (D) SHALL BE THE SUM OF THE TOTAL INDIVIDUAL CROSSING ITEMS
5. SPACING REQUIREMENTS BETWEEN CONDUITS/PIPES APPLIES TO CONDUITS/PIPES CROSSING AT 60° OR LESS. PIPES/CONDUITS CROSSING EACH OTHER GREATER THAN 60° CAN BE IN CONTACT WITH EACH OTHER (CODE PERMITTING)

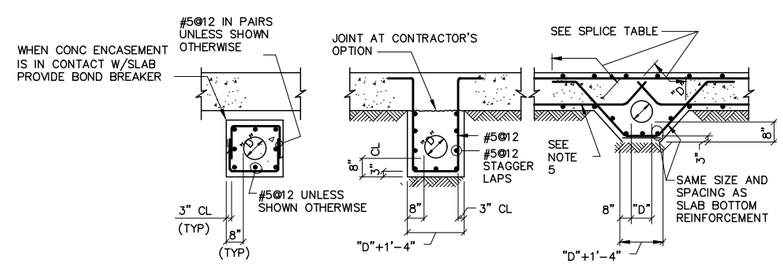

SOIL SUPPORTED STRUCTURES AND UNDER ROADWAYS

PILE SUPPORTED STRUCTURES

NOTES:

1. FOR PIPE DIAMETER AND ELEVATION, SEE CIVIL, MECHANICAL, HVAC AND PLUMBING DRAWINGS.
2. ALL PIPES LOCATED BENEATH STRUCTURES SHALL BE IN CONCRETE. ENCASEMENT SHALL EXTEND 5'-0" (MIN) BEYOND STRUCTURE.
3. PROVIDE COMPACTED SELECT FILL TO UNDERSIDE OF STRUCTURES.
4. CONCRETE PIPE ENCASEMENT SHALL BE CAST SEPARATELY FROM THE CONCRETE SLAB. PROVIDE BOND BREAKER OR LAYER OF SELECT FILL BETWEEN ENCASEMENT AND CONCRETE SLAB.
5. BOTTOM REINFORCEMENT TO BE CONTINUOUS WHERE POSSIBLE.

PIPE ENCASEMENT DETAILS

Hazen ARCADIS
A JOINT VENTURE

LEGAL ENTITY:
ARCADIS CE, INC.

SEALS

STATE OF NEW YORK · MARINAL VERMA · 072178 · LICENSED PROFESSIONAL ENGINEER

NASSAU COUNTY, NEW YORK
DEPARTMENT OF PUBLIC WORKS

LONG BEACH WPCP CONSOLIDATION PUMP STATION CONVERSION

LONG BEACH WASTEWATER POLLUTION CONTROL PLANT

NO.	DATE	ISSUED FOR	BY

COPYRIGHT: 2017 HAZEN AND SAWYER/ ARCADIS A JOINT VENTURE

DATE: JULY 2020
PROJECT NO.: 00726790.0001
FILE NAME: S-23
DESIGNED BY: C. BROADBENT
DRAWN BY: Z. SANGALANG
CHECKED BY: M. VERMA

SHEET TITLE
STRUCTURAL
TYPICAL DETAILS V

SCALE: NTS

S-23
SHEET 56 OF 112

User:SANGALANG Spec:AUS-NCSMOD File:I:\ACAD\PROJ\00726790.0001\SHEETS\S-23.DWG Scale:1:1 SavedDate:7/8/2020 Time:15:52 Plot Date: Sangalang, Zosimo; 7/17/2020; 15:48 ; Layout:LAYOUT1

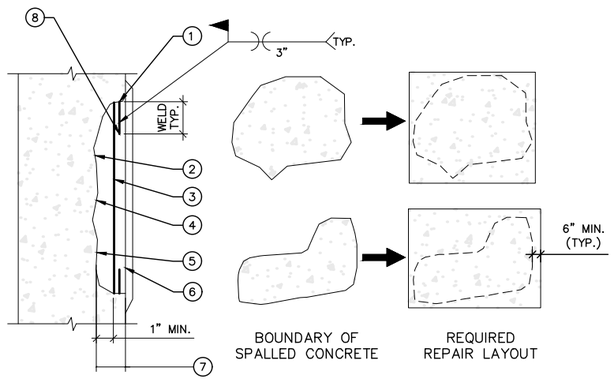

SECTION ELEVATION

1. DO NOT CUT REINFORCING UNLESS NECESSARY TO REMOVE ALL DETERIORATED CONCRETE.
2. REMOVE ALL DETERIORATED CONCRETE TO SOUND CONCRETE. CHIP CONCRETE SUBSTRATE TO OBTAIN A SURFACE PROFILE OF 1/8-INCH IN DEPTH WITH A NEW FRACTURED AGGREGATE SURFACE.
3. WHERE REINFORCING STEEL WITH ACTIVE CORROSION IS ENCOUNTERED, ENGINEER TO REVIEW CONDITION OF CORRODED REBARS PRIOR TO REPAIR. REPLACEMENT IS REQUIRED WHERE LOSS ON REBAR CROSS SECTION IS OVER 25% AFTER REPAIR WHERE REINFORCING REMAINS, CLEAN REINFORCING STEEL TO REMOVE ALL CONTAMINANTS AND RUST. REMOVE CONCRETE TO A DEPTH OF 1-INCH MINIMUM BEHIND REINFORCING BAR AS SHOWN.
4. SURFACE SHALL BE DAMP BUT FREE OF STANDING WATER.
5. INSTALL CONCRETE REPAIR MATERIALS PER THE MANUFACTURER'S REQUIREMENTS.
6. REPAIR MORTAR SHALL BE ADDED SO THAT THE MINIMUM COVER OVER EXISTING REINFORCING STEEL IS 1 1/2".
7. THE CONTRACTOR SHALL BE PERMITTED TO PLACE REPAIR MORTAR RESULTING IN LOCALLY RAISED AREAS, WHERE NEEDED TO PROVIDE COVER. TRANSITION TO EXISTING SURFACE WITH 4:1 OR FLATTER SLOPE.
8. REFER TO THE GENERAL NOTES FOR ADDITIONAL EXISTING CONCRETE NOTES, SPECIFIED PRODUCTS AND REQUIREMENTS FOR COORDINATION OF WORK.
9. FOR BID PURPOSES, ASSUME TOTAL DEPTH OF REPAIR IS 4-INCHES.
10. CUT EXISTING CORRODED REINFORCING BAR AS REQUIRED AND WELD NEW REBAR SAME SIZE.

TYPICAL CONCRETE SURFACE REPAIR DETAIL – TYPE 1
(WITH OR WITHOUT REBAR REPAIR)
SCALE: N.T.S.

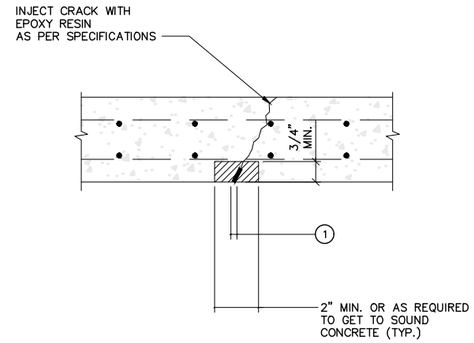

1. FOR CRACKS WIDER THAN 1/8" CUT CONCRETE AS SHOWN AND PATCH.
2. IF EXISTING REINFORCING BARS ARE EXPOSED, REPAIR AS PER REPAIR TYPE 1.

NON STRUCTURAL CRACK REPAIR – TYPE 2
SCALE: N.T.S.

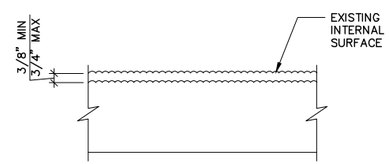

NOTES:

1. REMOVE DETERIORATED CONCRETE. REMOVE MAX. 3/4" OF SURFACE CONCRETE BY HYDROBLASTING.
2. DAMAGED CONCRETE SHALL BE REMOVED TO A DEPTH UNTIL SOUND CONCRETE IS ENCOUNTERED AND REPAIRED PER SPECIFICATION SECTION 03930.
3. REPAIR CRACKS PER DETAIL 2 & 3 AS DIRECTED BY ENGINEER.
4. APPLY REPAIR MORTAR ON SURFACE TO RESTORE SURFACE TO ORIGINAL CONDITION.
5. COATING SHALL BE APPLIED AFTER ALL REPAIR TYPES ARE COMPLETED AND ON AREA IN ACCORDANCE WITH SPECIFICATION SECTION 09900.

TYPICAL EXPOSED AGGREGATE REPAIR – TYPE 4
N.T.S.

TOTAL CONCRETE/CRACK/SURFACE REPAIR QUANTITIES

TYPE	DESCRIPTION	QUANTITY	UNIT
1	CONCRETE SURFACE REPAIR	1000	SF
1	CONCRETE SURFACE REPAIR W/EXPOSED REINF	200	SF
3	CONCRETE STRUCTURAL CRACK REPAIR	200	LF
2	CONCRETE NON-STRUCTURAL CRACK REPAIR	100	LF
–	CONCRETE SLAB AND MISCELLANEOUS REPAIR	30	CY

NOTES:

1. ESTIMATED QUANTITIES ARE FOR BIDDING PURPOSES ONLY. QUANTITIES SHALL BE VERIFIED DURING CONSTRUCTION.

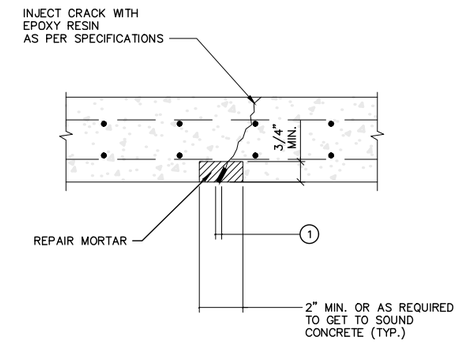

1. FOR CRACKS WIDER THAN 1/8" CUT CONCRETE AS SHOWN AND PATCH.
2. IF EXISTING REINFORCING BARS ARE EXPOSED, REPAIR AS PER REPAIR TYPE 1.

STRUCTURAL CRACK REPAIR – TYPE 3
SCALE: N.T.S.

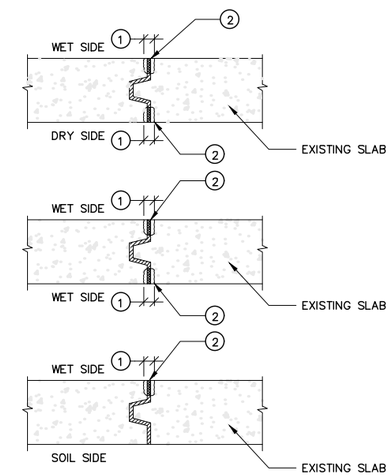

1. RECONSTRUCT JOINT SPACE TO ACHIEVE STRAIGHT EDGES WHERE REQUIRED.
2. JOINT FILLER AND SEALANT TO BE REPAIRED AS DIRECTED.
3. UNIT PRICE TO INCLUDE ANY NECESSARY CHIPPING, FORMWORK, REBAR REPAIR, EPOXY BONDING APPLICATION, CONCRETE REPAIR AND CURING ALL AS REQUIRED TO REPAIR JOINT EDGES.

TYPICAL EXPANSION JOINT REPAIR – TYPE 5
N.T.S.

Hazen ARCADIS
A JOINT VENTURE

LEGAL ENTITY:
ARCADIS CE, INC.

SEALS

STATE OF NEW YORK
MARINAL VERMA
LICENSED PROFESSIONAL ENGINEER

NASSAU COUNTY, NEW YORK
DEPARTMENT OF PUBLIC WORKS

LONG BEACH WPCP CONSOLIDATION PUMP STATION CONVERSION

LONG BEACH WASTEWATER POLLUTION CONTROL PLANT

NO.	DATE	ISSUED FOR	BY

COPYRIGHT: 2017 HAZEN AND SAWYER/ ARCADIS A JOINT VENTURE

DATE: JULY 2020
PROJECT NO.: 00726790.0001
FILE NAME: S-24
DESIGNED BY: M. ESTRADA
DRAWN BY: Z. SANGALANG
CHECKED BY: M. VERMA

SHEET TITLE
STRUCTURAL
TYPICAL DETAILS VI

SCALE: NTS

S-24
SHEET 57 OF 112

User:SANGALANG Spec:AUS-NCSMOD File:I:\ACAD\PROJ\00726790.0001\SHEETS\S-24.DWG Scale:1:1 SavedDate:7/8/2020 Time:15:54 Plot Date: Sangalang, Zosimo; 7/17/2020; 15:46 ; Layout:LAYOUT1

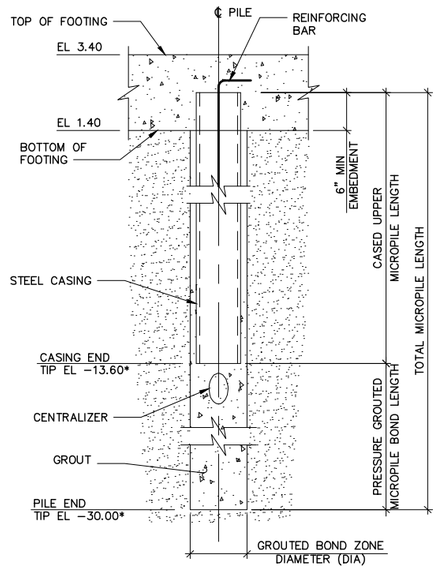

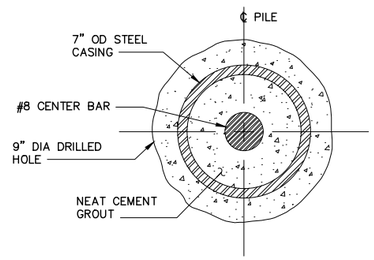

PILE NOTES:

1. THE MICROPILE SYSTEM, DETAILED HERE IS DESIGNED BASED ON A GEO–TECHNICAL RECOMMENDATIONS PROVIDED IN REPORT PREPARED BY ARCADIS, DATED 07/02/2020, INCLUDED IN CONTRACT DOCUMENTS.
2. PILE TIP ELEVATIONS ARE SHOWN FOR GUIDANCE AND ARE APPROXIMATE.
3. CONTRACTOR SHALL CONFIRM THE PILE LENGTHS AND TIP ELEVATIONS AFTER INSTALLING TEST PILE AND PERFORMING THE LOAD TESTS AS SPECIFIED IN SPEC # 02455.
4. CONTRACTOR'S GEO–TECH ENGINEER, LICENSED IN NEW YORK STATE SHALL PREPARE AND SUBMIT TEST REPORT PER SPEC. 02455 AND SUBMIT FOR APPROVAL.
5. NO WORKING PILE SHALL BE INSTALLED UNTIL TEST REPORT IS APPROVED BY ENGINEER.

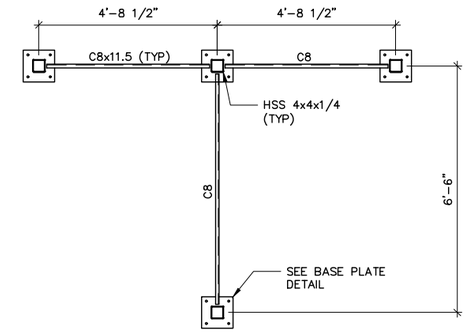

PLAN

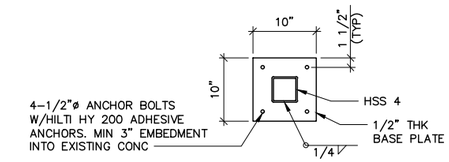

BASE PLATE

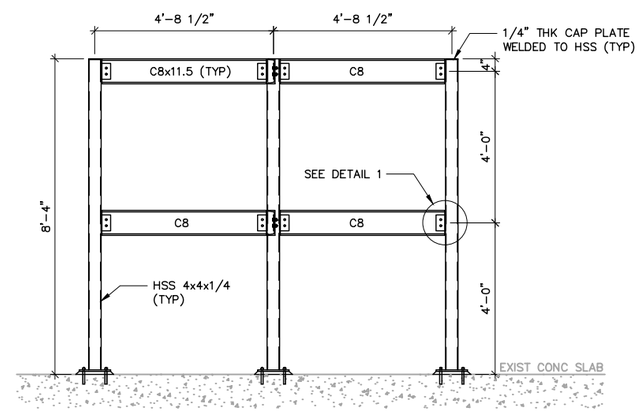

STEM SUPPORT DETAILS

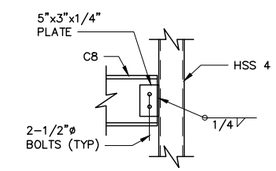

DETAIL 1

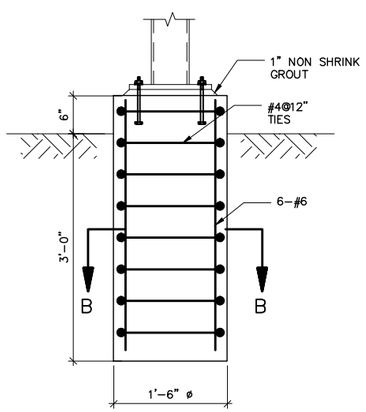

SONOTUBE FOOTING DETAILS

SCALE: 1" = 1'–0"

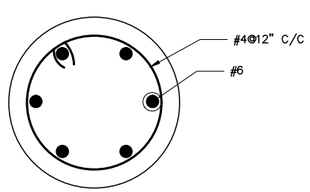

SECTION B–B

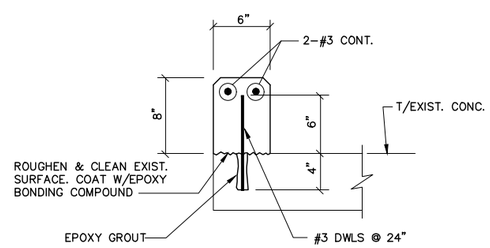

CONCRETE CURB DETAIL AT EXIST. CONC.

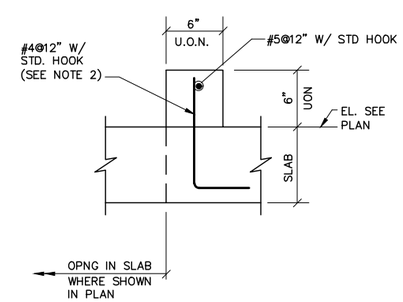

TYPICAL CONCRETE CURB DETAIL

NOTES:
1. PROVIDE MIN REINFORCING AS SHOWN ABOVE IN ALL CURBS (UON).
2. FOR EXISTING SLABS, DRILL HOLE DIAMETER AND DEPTH ON EXISTING SLAB PER MANUFACTURER'S REQUIREMENTS FOR ADHESIVE ANCHORAGE SYSTEM USED.
3. CURB TO BE 12" HIGH FOR ALL HVAC EQUIPMENT.

Hazen ARCADIS
A JOINT VENTURE

LEGAL ENTITY:
ARCADIS CE, INC.

SEALS

NASSAU COUNTY, NEW YORK
DEPARTMENT OF PUBLIC WORKS

LONG BEACH WPCP CONSOLIDATION
PUMP STATION CONVERSION

LONG BEACH WASTEWATER POLLUTION CONTROL PLANT

NO.	DATE	ISSUED FOR	BY

COPYRIGHT: 2017 HAZEN AND SAWYER/ ARCADIS A JOINT VENTURE

DATE:	JULY 2020
PROJECT NO.:	00726790.0001
FILE NAME:	S–25
DESIGNED BY:	M. ESTRADA
DRAWN BY:	Z. SANGALANG
CHECKED BY:	M. VERMA

SHEET TITLE

STRUCTURAL

TYPICAL DETAILS VII

SCALE: NTS

S–25

SHEET 58 OF 112

User:SANGALANG Spec:AUS–NCSMOD File:I:\ACAD\PROJ\00726790.0001\SHEETS\S–25.DWG Scale:1:1 SavedDate:7/8/2020 Time:15:55 Plot Date: Sangalang, Zosima; 7/17/2020; 15:44 ; Layout:LAYOUT1

ABBREVIATIONS

ACOUS	ACOUSTICAL	IN	INCH
ACT	ACOUSTICAL CEILING TILE	ID	INSIDE DIMENSION
ADH	ADHESIVE	INSUL	INSULATION
ADMIN	ADMINISTRATION	INT	INTERIOR
AFF	ABOVE FINISH FLOOR	JC	JANITOR'S CLOSET
ALUM	ALUMINUM	JT	JOINT
ANSI	AMERICAN NATIONAL STANDARDS INSTITUTE	LAB	LABORATORY
		LAV	LAVATORY
ALT	ALTERNATE	LP	LOW POINT
&	AND	MFR	MANUFACTURER
A	ARCHITECTURAL	MATL	MATERIAL
@	AT	MAX	MAXIMUM
B & B	BALLED & BURLAPPED	MECH	MECHANICAL
BSMT	BASEMENT	MTL	METAL
BM	BEAM	MEZZ	MEZZANINE
BTWN	BETWEEN	MIN	MINIMUM
BITUM	BITUMINOUS	MISC	MISCELLANEOUS
BLK	BLOCK	MOD	MODULAR
BD	BOARD	NEC	NATIONAL ELECTRICAL CODE
BOT	BOTTOM	NEMA	NATIONAL ELECTRICAL MANUFACTURERS ASSOCIATION
BO	BOTTOM OF		
BRK	BRICK	NFPA	NATIONAL FIRE PROTECTION ASSOCIATION
BC	BRICK COURSES		
BLDG	BUILDING	N	NORTH
CAB	CABINET	NTS	NOT TO SCALE
CPT	CARPET	NO	NUMBER
CIP	CAST IN PLACE	OC	ON CENTER
CLG	CEILING	OPNG	OPENING
CT	CERAMIC TILE	OPP	OPPOSITE
C/S	CIVIL SANITARY	OPH	OPPOSITE HAND
CLO	CLOSET	OD	OUTSIDE DIAMETER
COL	COLUMN	OCD	OVERHEAD COILING DOOR
CONC	CONCRETE	OSD	OVERHEAD SLIDING DOOR
CB	CONCRETE BLOCK	PNT	PAINT(ED)
CMU	CONCRETE MASONRY UNIT	PNL	PANEL
CONSTR	CONSTRUCTION	PART	PARTITION
CONT	CONTINUOUS	P	PLASTER
CJ	CONTROL JOINT	PL	PLATE
CORR	CORRIDOR	PLBG	PLUMBING
CSK	COUNTERSUNK	PVC	POLYVINYL CHLORIDE
CU	CUBIC	PVF	POLYVINYL FLUORIDE
CLR	CLEAR	PCP	PORTLAND CEMENT PLASTER
DBL	DOUBLE	PSF	POUNDS PER SQUARE FOOT
DEMO	DEMOLITION	PJ	PREMOLDED JOINT
DETS	DETAILS	PT	PRESSURE TREATED
DF	DRINKING FOUNTAIN	QUAN	QUANTITY
DIA	DIAMETER	QT	QUARRY TILE
DIM	DIMENSION	RAD	RADIUS
DN	DOWN	REF	REFERENCE
DO	DOOR OPENING	REINF	REINFORCING
DPT	DEPTH	REQD	REQUIRED
DR	DOOR	R	RISER
DWL	DOWEL	RD	ROOF DRAIN
DWG	DRAWING	RM	ROOM
EA	EACH	RO	ROUGH OPENING
E	EAST	SECT	SECTION
EWC	ELECTRIC WATER COOLER	SHTHG	SHEATHING
ELEC	ELECTRICAL	SHT	SHEET
EL	ELEVATION	SMS	SHEET METAL SCREWS
EMBED	EMBEDMENT	SIM	SIMILAR
ENGR	ENGINEER	S	SOUTH
EQ	EQUAL	SPECS	SPECIFICATIONS
EQUIP	EQUIPMENT	SQ	SQUARE
EX	EXISTING	SST	STAINLESS STEEL
EXP	EXPANSION	STD	STANDARD
EJ	EXPANSION JOINT	STA	STATION
EXT	EXTERIOR	STL	STEEL
FT	FEET	STOR	STORAGE
FRP	FIBER REINFORCED PLASTIC	STRUCT	STRUCTURAL
FWP	FIBROUS WOOD PANEL	SUSP	SUSPENDED
FIN	FINISH	SYS	SYSTEM
FIN FLR	FINISH FLOOR	TEMP	TEMPORARY
FE	FIRE EXTINGUISHER	TER	TERRAZZO
FIXT	FIXTURE	TC	TERRA COTTA
FLR	FLOOR	THK	THICK(NESS)
FD	FLOOR DRAIN	TOS	TOP OF SLAB/STEEL
FDTN	FOUNDATION	TOPP	TOPPING
GA	GAGE	TRANS	TRANSOM
GALV	GALVANIZED	T	TREAD
GEN	GENERAL	TYP	TYPICAL
GL	GLASS	UL	UNDERWRITER'S LABORATORIES
GST	GLAZED STRUCTURAL TILE	UON	UNLESS OTHERWISE NOTED
GR	GRADE	UNFIN	UNFINISHED
GCFFB	GROUND AND CEMENTITIOUS FILLED FACE CONCRETE BLOCK	VAR	VARIES
		VERT	VERTICAL
GCFFAB	GROUND AND CEMENTITIOUS FILLED FACE – SLOTTED ACOUSTICAL BLOCK	VIF	VERIFY IN FIELD
		VT	VINYL TILE
		VP	VISION PANEL
GYP	GYPSUM	WC	WATER CLOSET
GWB	GYPSUM WALLBOARD	WT	WEIGHT
HDN	HARDENER	W	WEST
HDW	HARDWARE	W/	WITH
HVAC	HEATING, VENTILATING AND AIR CONDITIONING	W/O	WITHOUT
		WD	WOOD
HDCT	HEAVY DUTY CONCRETE TOPPING	WDT	WIDTH
HT	HEIGHT		
HP	HIGH POINT		
HM	HOLLOW METAL		
HORIZ	HORIZONTAL		
INFO	INFORMATION		

LEGEND

- STRUCTURAL COLUMN CENTERLINE, WALL CENTERLINE IF NOT COLUMN
- EXISTING STRUCTURAL COLUMN CENTERLINE, WALL CENTERLINE IF NOT COLUMN
- NUMBER
- ACCESSORY, LAB FURNITURE & EQUIPMENT KEY
- BUILDING ELEVATION THIS SIDE
- CENTERLINE
- DIAMETER
- WALL ELEVATION SYMBOL WALL NUMBER
- SHEET NUMBER
- ROOM NUMBER
- WINDOW NUMBER SYMBOL
- WALL PARTITION TYPE
- ELEVATION INDICATION

- METAL WALL PANEL
- CONCRETE MASONRY
- CONCRETE
- EXISTING BRICK MASONRY
- EXISTING CONCRETE MASONRY
- EXISTING CONCRETE
- GROUT
- STEEL
- EARTH
- RIGID INSULATION
- GRATING
- BATT INSULATION

GENERAL ARCHITECTURAL NOTES

1. THE LEGEND AND ABBREVIATIONS LIST ON THIS SHEET IS A COMPREHENSIVE STANDARD GUIDE INTENDED FOR GENERAL USE ON ALL PROJECTS. THEREFORE NOT ALL THE SYMBOLS AND ABBREVIATIONS CONTAINED IN THIS LIST ARE NECESSARILY USED ON THIS PARTICULAR PROJECT AND SHOULD BE USED FOR CLARIFICATION ONLY.
2. ITEMS NOT NOTED ON DRAWINGS SHALL BE CONSIDERED THE SAME AS NOTED ITEMS WHICH ARE GRAPHICALLY REPRESENTED IN THE SAME MANNER.
3. ASTERISK (*) INDICATES VERIFY DIMENSION WITH MANUFACTURER OF EQUIPMENT SUPPLIED.
4. FIELD VERIFY ALL EXISTING DIMENSIONS AND CONDITIONS.
5. FOR CONCRETE AND STEEL SIZES AND CONFIGURATIONS SEE 'S' DRAWINGS.
6. FOR LOCATION OF HVAC EQUIPMENT AND PADS COORDINATE WITH 'H' DRAWINGS.
7. FOR FLOOR DRAIN LOCATIONS SEE 'P' DRAWINGS.
8. FOR FINAL GRADING AND BUILDING LOCATION SEE 'C' DRAWINGS.
9. FOR EXACT LOCATION OF MECHANICAL EQUIPMENT VENTS COORDINATE WITH 'M' DRAWINGS.
10. COORDINATE WITH ELECTRICAL DRAWINGS FOR LOCATION AND SIZE OF RECESSED ELECTRICAL DEVICES IN WALLS. SEE ELECTRICAL DRAWINGS FOR LOCATIONS AND DETAILS.
11. COORDINATE WITH ELECTRICAL DRAWINGS FOR LIGHT FIXTURE TYPES AND LOCATIONS.
12. COORDINATE EXTENT OF DEMOLITION WORK WITH 'D' DRAWINGS.
13. FOR EXTENT OF GRATING AND DETAILS SEE 'S' DRAWINGS.
14. COORDINATE WITH ARCHITECTURAL WORK SHOWN ON OTHER DISCIPLINE'S DRAWINGS. REFER TO 'S' AND 'M' DRAWINGS FOR OTHER WORK, INCLUDING, BUT NOT LIMITED TO:
    - 14.1. REFER TO 'S' & 'M' DRAWINGS OF EXISTING PUMP STATION FOR WORK; RAILINGS, LADDERS, GRATING, HATCHES, PAINTING, SPRAYED FIRE–RESISTIVE MATERIALS, ETC.
    - 14.2. REFER TO 'S' DRAWINGS AT GENERATOR PLATFORM FOR WORK; STAIRS, RAILINGS, SILANE WATER REPELLANT, ETC.

SHEET REFERENCES

1. FOR RAILING AND LADDER DETAILS, REFERENCE SHEET A–06.
2. FOR DOOR SCHEDULE AND DETAILS, REFERENCE SHEETS A–07.
3. FOR SPLASH BLOCK DETAILS, REFERENCE SHEET A–07.
4. FOR ROOM FINISH SCHEDULE, REFERENCE SHEET A–07.
5. FOR WALL PARTITION TYPES, REFERENCE SHEET A–06.
6. FOR SIGNAGE TYPES, SIGNAGE SCHEDULES AND NOTES, REFERENCE SHEET A–08.
7. FOR BOLLARD DETAILS, REFERENCE SHEET C–12.

CONSTRUCTION NOTES

1. INSTALL DOOR FRAMES AS SHOWN AND SPECIFIED AS THE WORK PROGRESSES. DO NOT HANG DOORS AND INSTALL FINISH HARDWARE UNTIL ALL WORK BY ALL CONTRACTORS HAS BEEN COMPLETED IN AN AREA AND THERE IS NO FURTHER CONSTRUCTION ACTIVITIES OR REQUIRED ENTRY BY ANY CONTRACTOR. DOORS AND FINISHED HARDWARE INSTALLED AND SUBSEQUENTLY DAMAGED IN ANY WAY FOR ANY REASON SHALL BE IMMEDIATELY REPLACED BY GENERAL CONTRACTOR AT NO ADDITIONAL COST TO THE OWNER. IMMEDIATELY MEANS FROM THE TIME THE DAMAGE IS OBSERVED AND REPORTED TO THE GENERAL CONTRACTOR BY CONSTRUCTION MANAGEMENT TO THE TIME OF REINSTALLATION SHALL NOT BE MORE THAN ONE MONTH.
2. DOORS FRAMES SHALL BE BOXED OUT IN WOOD TO PREVENT CONSTRUCTION DAMAGE.
3. INSTALL TEMPORARY 3/4" PLYWOOD DOORS AND LOCKS. REMOVE WHEN CONSTRUCTION ACCESS AND ACTIVITIES ARE FINISHED IN AN AREA AT THE TIME WHEN DOORS AND FINISH HARDWARE ARE INSTALLED.
4. PAINTING – COORDINATE INSTALLATION OF PAINTING IN ORDER TO PERFORM WORK BEFORE INSTALLATION OF WORK PERFORMED IN M, E, H AND P DRAWINGS.

STRUCTURAL REINFORCING NOTES

1. UNLESS OTHERWISE NOTED ON DRAWINGS, ALL MASONRY WALLS SHALL BE REINFORCED WITH A MINIMUM REINFORCING AS FOLLOW:
    - 1.1. INTERIOR WALLS VERTICAL REINFORCING BARS – #5 @ 2'–0" OC.
    - 1.2. ALL WALL CELLS SHALL BE GROUTED SOLID FULL HEIGHT AND WIDTH.
    - 1.3. ALL REINFORCING BARS SHALL BE CONTINUOUS UNLESS OTHERWISE SHOWN. ALL HOOKS SHALL BE STANDARD. LAP BARS ACCORDING TO STANDARD LAP LENGTHS, SEE STRUCTURAL DRAWINGS FOR DETAILS.
    - 1.4. UNLESS OTHERWISE NOTED, ALL VERTICAL REINFORCING SHALL HAVE MATCHING DOWELS.
    - 1.5. A VERTICAL REINFORCING BAR SHALL BE PLACED AT ALL WALL ENDS.
    - 1.6. FOR TYPICAL MASONRY WALL REINFORCING DETAILS, REFERENCE SHEET A–06.

STAIR NOTES

1. EXTERIOR STAIRS AT THE ELECTRICAL BUILDING PLATFORM AND THE GENERATOR PLATFORM ARE TO BE CONSTRUCTED OF ALUMINUM COMPONENTS; STRINGERS, LANDING STRUCTURE, GRATING, RAILINGS, ETC. SEE SPECIFICATIONS.

Hazen ARCADIS
A JOINT VENTURE

LEGAL ENTITY:
ARCADIS CE, INC.

SEALS

REGISTERED ARCHITECT ERROL ANTONIO DAWKINS 023835 STATE OF NEW YORK 7/21/2020

NASSAU COUNTY, NEW YORK
DEPARTMENT OF PUBLIC WORKS

LONG BEACH WPCP CONSOLIDATION
PUMP STATION CONVERSION

LONG BEACH WASTEWATER POLLUTION CONTROL PLANT

NO.	DATE	ISSUED FOR	BY

COPYRIGHT: 2017 HAZEN AND SAWYER/ ARCADIS A JOINT VENTURE

DATE:	JULY 2020
PROJECT NO.:	00726790.0001
FILE NAME:	A–01
DESIGNED BY:	R. BELLO
DRAWN BY:	R. BOBY
CHECKED BY:	E. DAWKINS

SHEET TITLE

ARCHITECTURAL

LEGENDS, ABBREVIATIONS AND GENERAL NOTES

SCALE:
NOT TO SCALE

A–01

SHEET 59 OF 112

User: JMA Spec: AUS–NCSMOD File: \\NY03FP01\DATA\WH_CAD\VOL2\ACAD\PROJ\00726790.0001\SHEETS\A–01.DWG Scale: 1:1 SavedDate: 7/17/2020 Time: 09:53 Plot Date: Mo, Jessica; 7/17/2020; 16:11 ; Layout: A–01

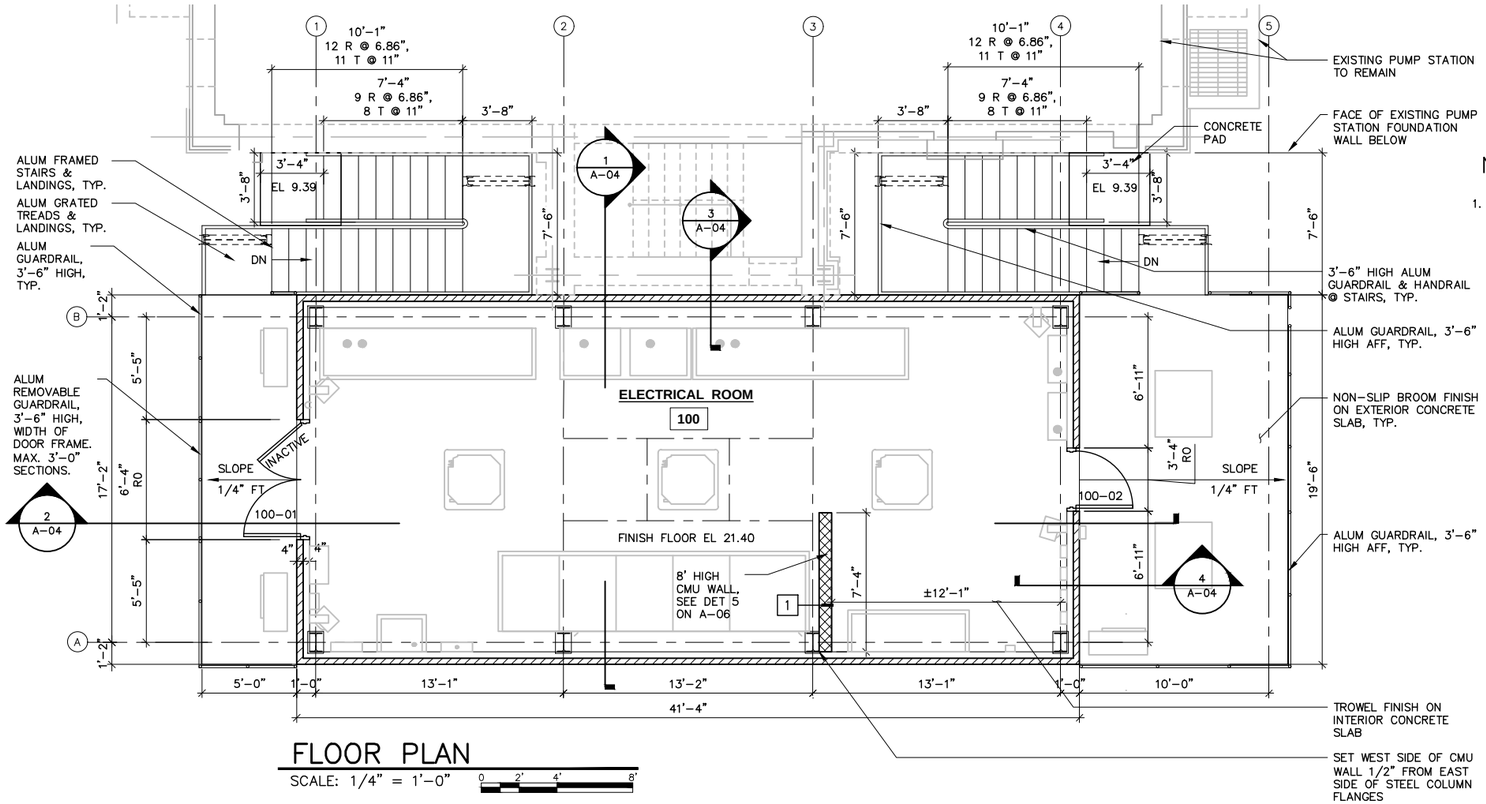

FLOOR PLAN

SCALE: 1/4" = 1'-0"

NOTES:

1. SLOPE EXTERIOR PORTION OF CONCRETE FLOOR SLAB AWAY FROM DOORS. COORDINATE WITH 'S' DRAWINGS.

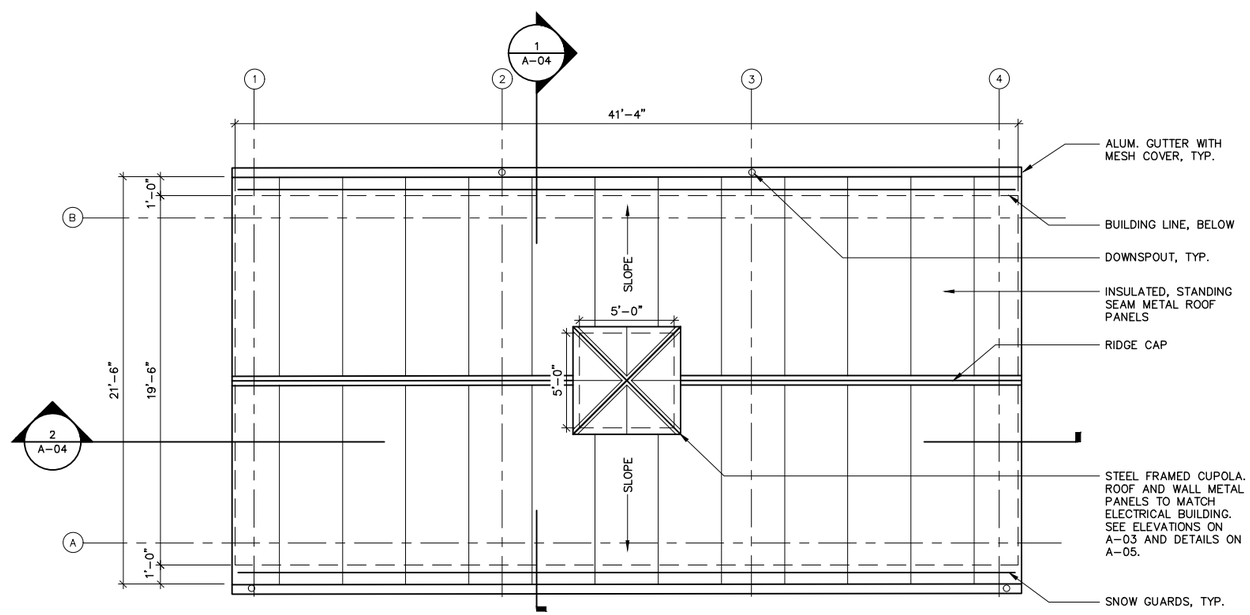

ROOF PLAN

SCALE: 1/4" = 1'-0"

Hazen ARCADIS
A JOINT VENTURE

LEGAL ENTITY:
ARCADIS CE, INC.

SEALS

REGISTERED ARCHITECT ERROL ANTONIO DAWKINS 023835 STATE OF NEW YORK 7/21/2020

NASSAU COUNTY, NEW YORK
DEPARTMENT OF PUBLIC WORKS

LONG BEACH WPCP CONSOLIDATION
PUMP STATION CONVERSION

LONG BEACH WASTEWATER POLLUTION CONTROL PLANT

NO.	DATE	ISSUED FOR	BY

COPYRIGHT: 2017 HAZEN AND SAWYER/ ARCADIS A JOINT VENTURE

DATE: JULY 2020
PROJECT NO.: 00726790.0001
FILE NAME: A-02
DESIGNED BY: R. BELLO
DRAWN BY: R. BOBY
CHECKED BY: E. DAWKINS

SHEET TITLE

ARCHITECTURAL

ELECTRICAL BUILDING FLOOR PLAN AND ROOF PLAN

SCALE: 1/4" = 1'-0"

A-02

SHEET 60 OF 112

User:JMA Spec:AUS-NCSMOD File:\\NY03FP01\DATA\WHI_CAD\VOL2\ACAD\PROJ\00726790.0001\SHEETS\A-02.DWG Scale:1:1 SavedDate:7/17/2020 Time:09:53 Plot Date: Mo, Jessica; 7/17/2020; 16:17 ; Layout:A-02

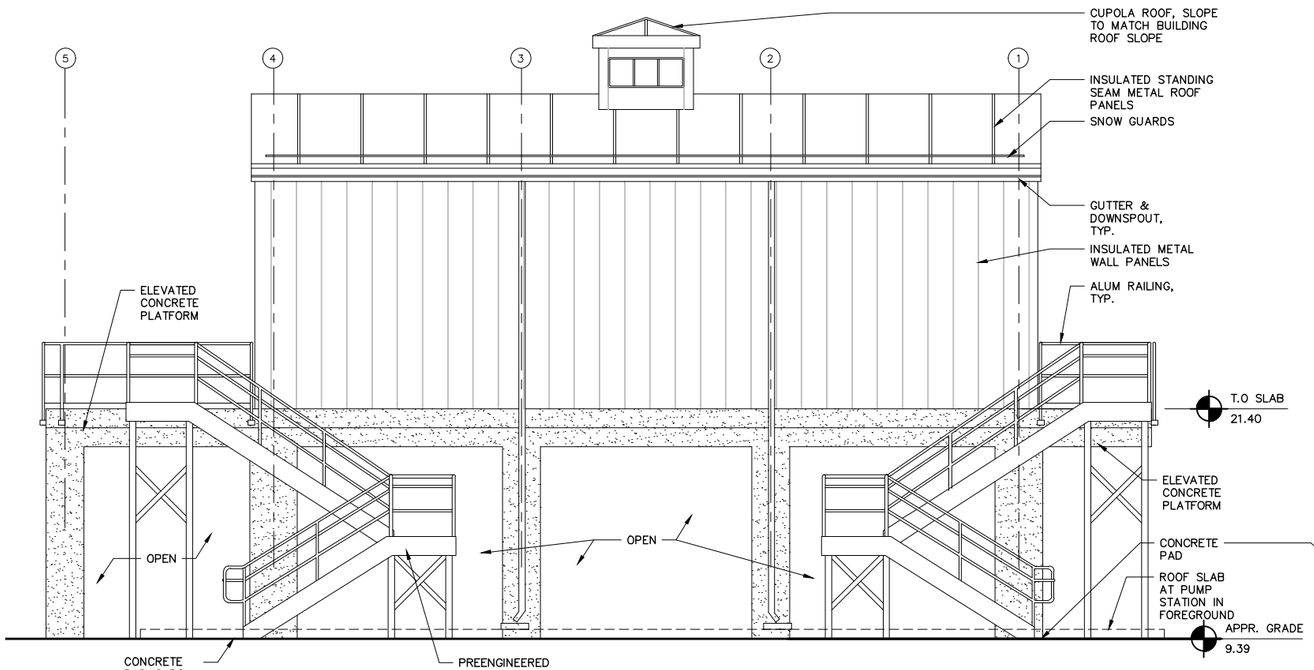

NORTH ELEVATION

SCALE: 1/4" = 1'-0"

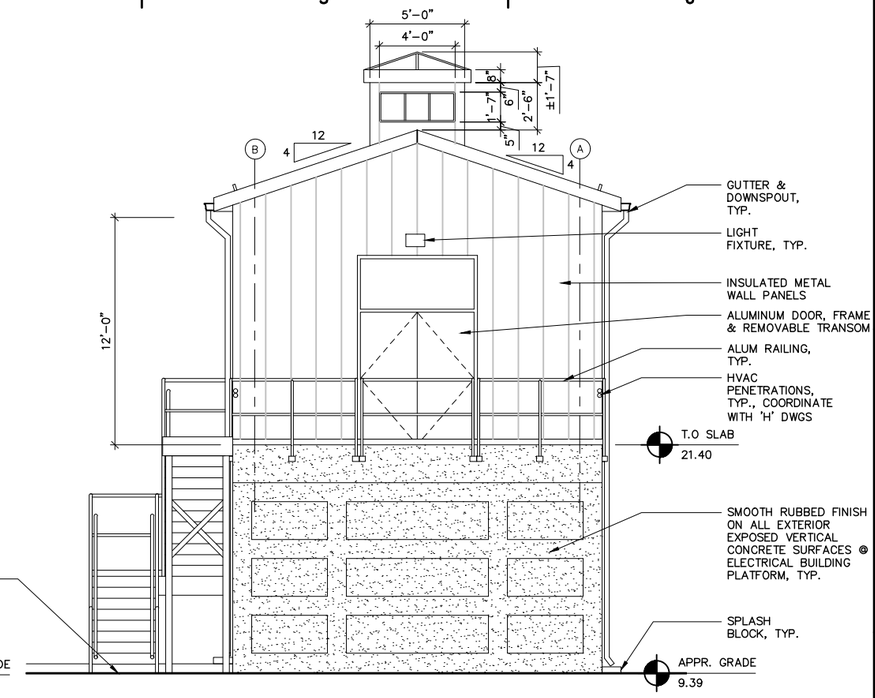

WEST ELEVATION

SCALE: 1/4" = 1'-0"

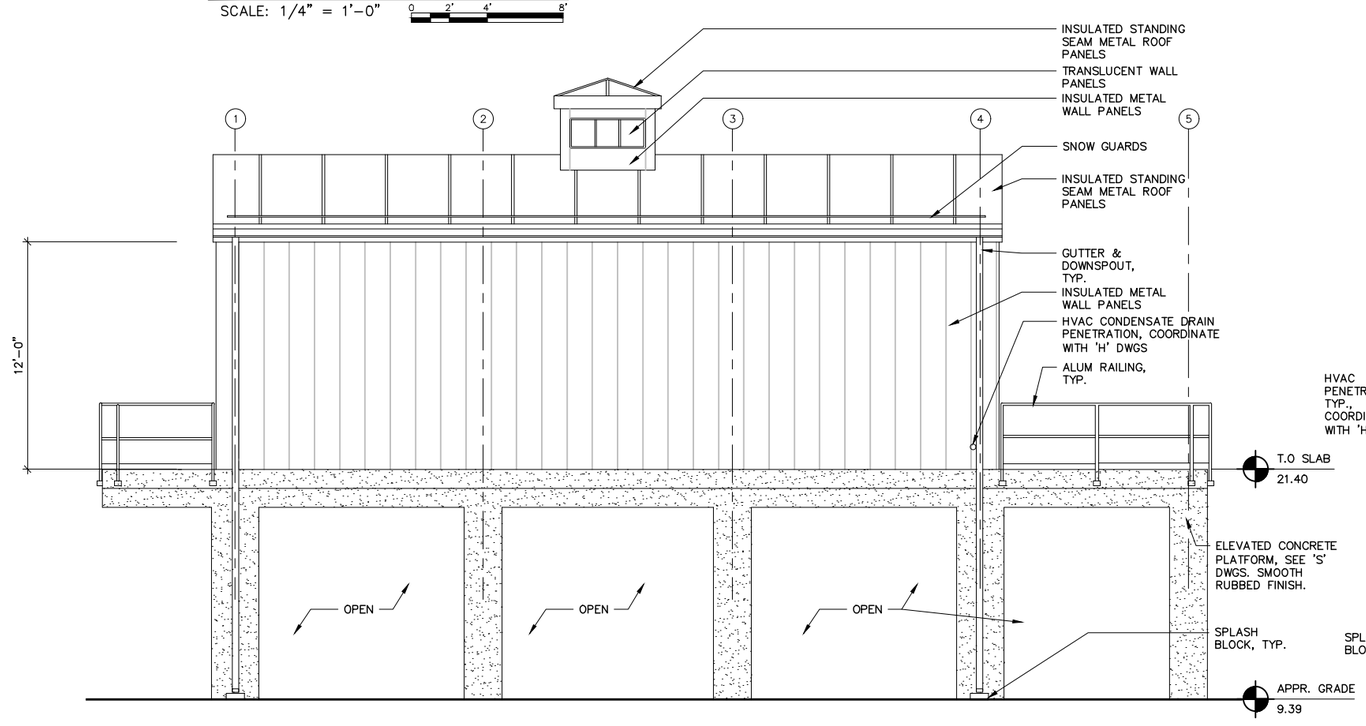

SOUTH ELEVATION

SCALE: 1/4" = 1'-0"

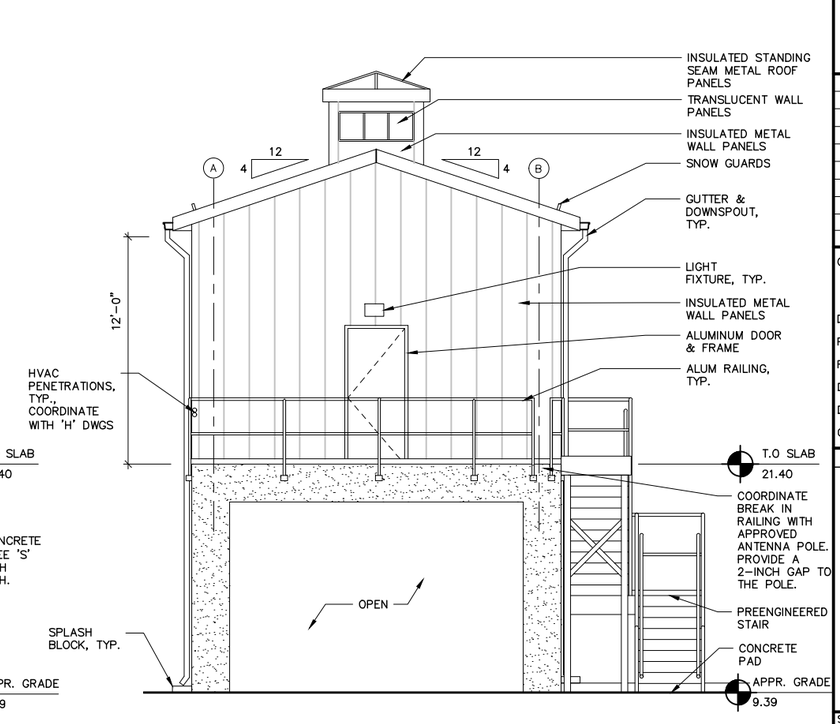

EAST ELEVATION

SCALE: 1/4" = 1'-0"

Hazen ARCADIS
A JOINT VENTURE

LEGAL ENTITY:
ARCADIS CE, INC.

SEALS

NASSAU COUNTY, NEW YORK
DEPARTMENT OF PUBLIC WORKS

LONG BEACH WPCP CONSOLIDATION PUMP STATION CONVERSION

LONG BEACH WASTEWATER POLLUTION CONTROL PLANT

NO.	DATE	ISSUED FOR	BY

COPYRIGHT: 2017 HAZEN AND SAWYER/ ARCADIS A JOINT VENTURE

DATE:	JULY 2020
PROJECT NO.:	00726790.0001
FILE NAME:	A-03
DESIGNED BY:	R. BELLO
DRAWN BY:	R. BOBY
CHECKED BY:	E. DAWKINS

SHEET TITLE

ARCHITECTURAL

ELECTRICAL BUILDING: EXTERIOR ELEVATIONS

SCALE: 1/4" = 1'-0"

A-03

SHEET 61 OF 112

User: JMA Spec: AUS-NCSMOD File: \\NY03FP01\DATA\WH_CAD\V0L2\ACAD\PROJ\00726790.0001\SHEETS\A-03.DWG Scale: 1:1 SavedDate: 7/17/2020 Time: 09:53 Plot Date: Mo, Jessica; 7/17/2020; 16:18 ; Layout: A-03

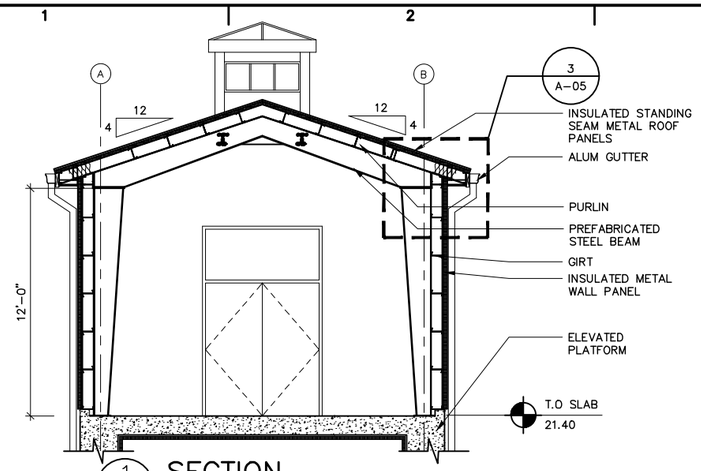

1 A-02 SECTION

SCALE: 1/4" = 1'-0"

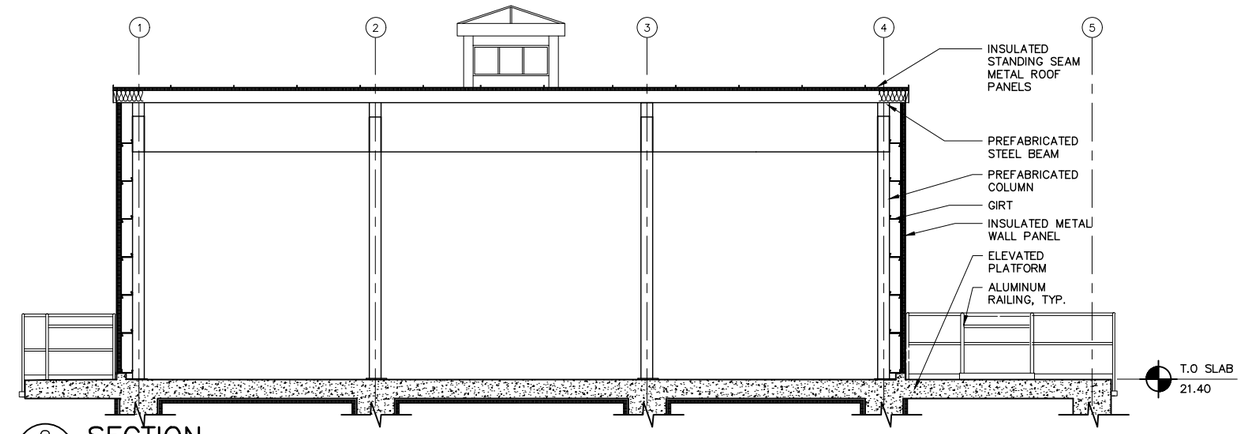

2 A-02 SECTION

SCALE: 1/4" = 1'-0"

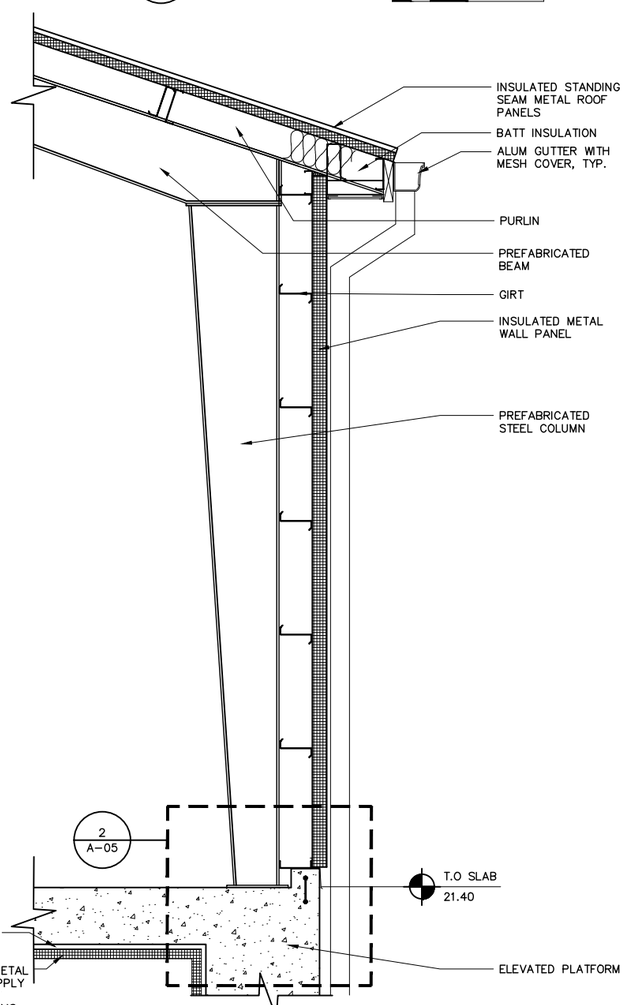

3 A-02 WALL SECTION

SCALE: 3/4" = 1'-0"

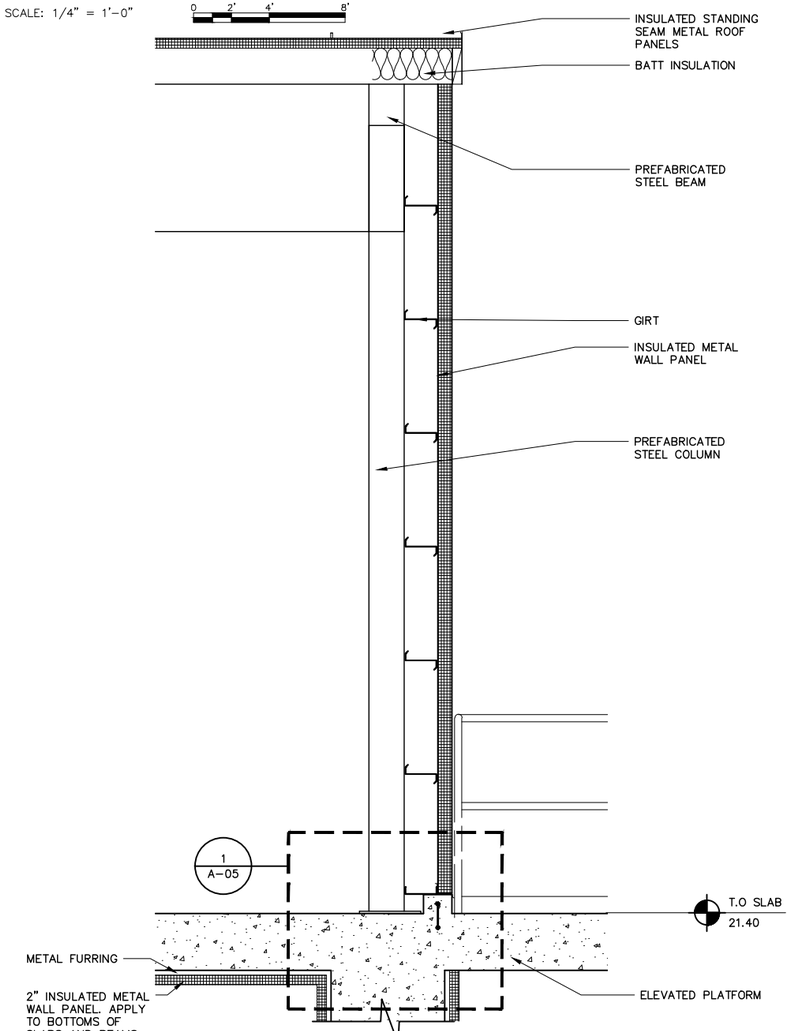

4 A-02 WALL SECTION

SCALE: 3/4" = 1'-0"

Hazen ARCADIS
A JOINT VENTURE

LEGAL ENTITY:
ARCADIS CE, INC.

SEALS

REGISTERED ARCHITECT
ERROL ANTONIO DAWKINS
023835
STATE OF NEW YORK
7/21/2020

NASSAU COUNTY, NEW YORK
DEPARTMENT OF PUBLIC WORKS

LONG BEACH WPCP CONSOLIDATION
PUMP STATION CONVERSION

LONG BEACH WASTEWATER POLLUTION CONTROL PLANT

NO.	DATE	ISSUED FOR	BY

COPYRIGHT: 2017 HAZEN AND SAWYER/ ARCADIS A JOINT VENTURE

DATE: JULY 2020
PROJECT NO.: 00726790.0001
FILE NAME: A-04
DESIGNED BY: R. BELLO
DRAWN BY: R. BOBY
CHECKED BY: E. DAWKINS

SHEET TITLE

ARCHITECTURAL

ELECTRICAL BUILDING: BUILDING AND WALL SECTIONS

SCALE: AS SHOWN

A-04

SHEET 62 OF 112

User:JMA Spec:AUS-NCSMOD File:\\NY03FP01\DATA\WHI_CAD\V04.2\ACAD\PROJ\00726790.0001\SHEETS\A-04.DWG Scale:1:1 SavedDate:7/17/2020 Time:09:15 Plot Date: Mo, Jessica; 7/17/2020; 16:19 ; Layout:A-04

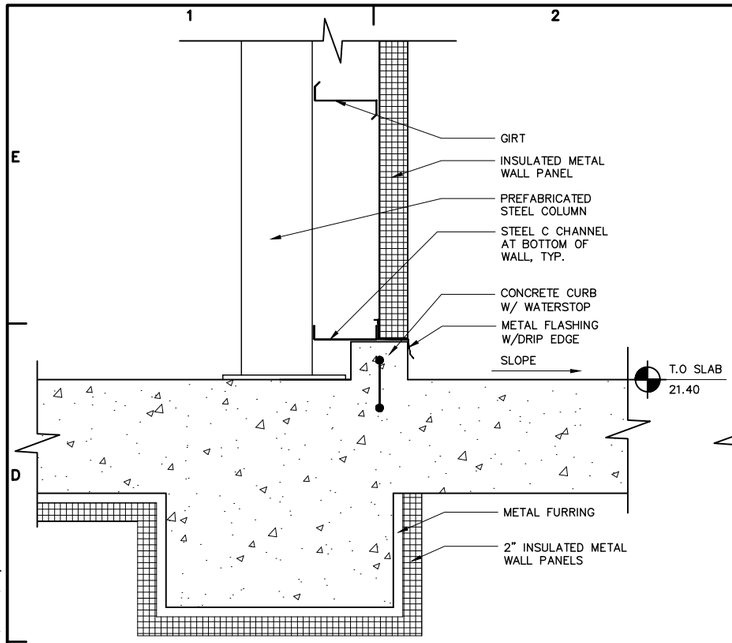

1 A-04 WALL BASE DETAIL @ PLATFORM

SCALE: 1 1/2"=1'-0"

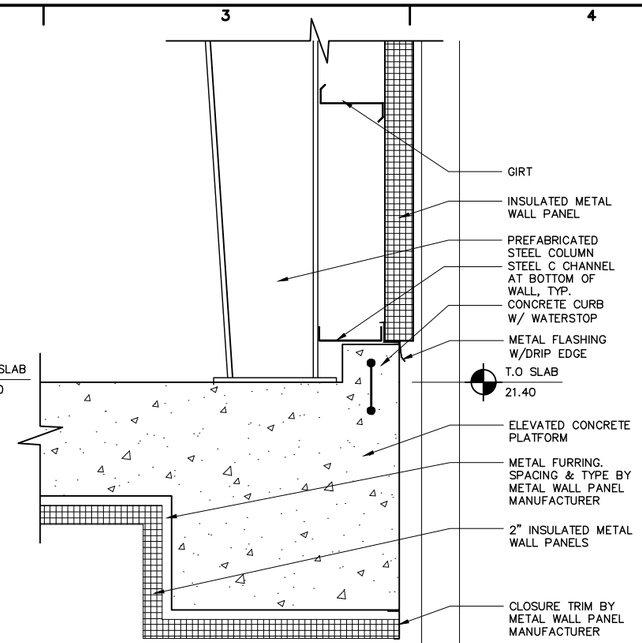

2 A-04 WALL BASE DETAIL

SCALE: 1 1/2"=1'-0"

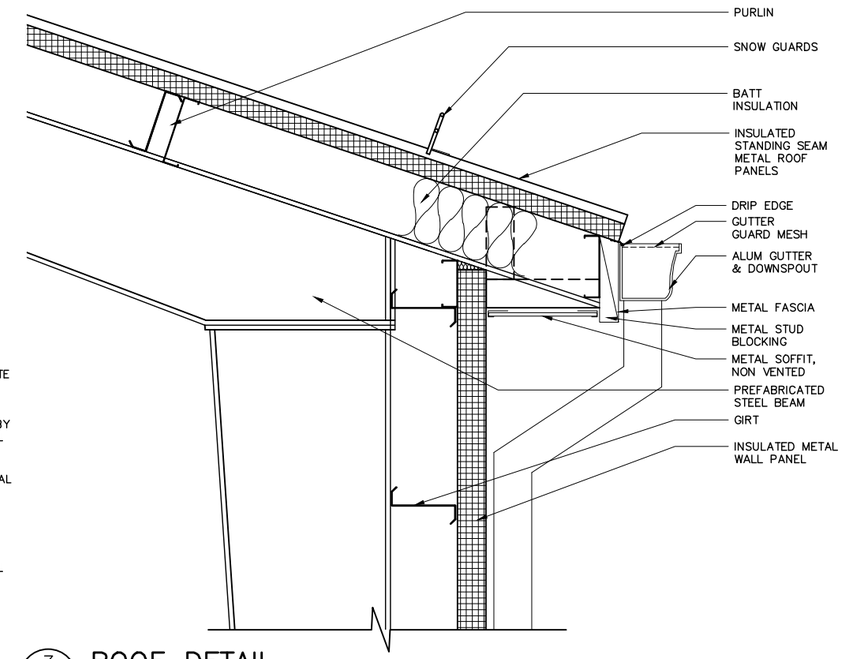

3 A-04 ROOF DETAIL

SCALE: 1 1/2"=1'-0"

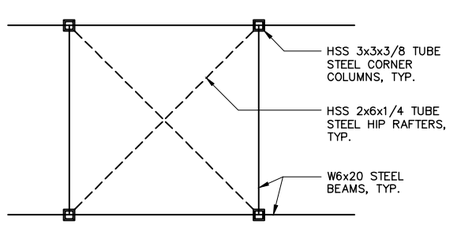

4 CUPOLA FRAMING PLAN DETAIL

SCALE: 1/2"=1'-0"

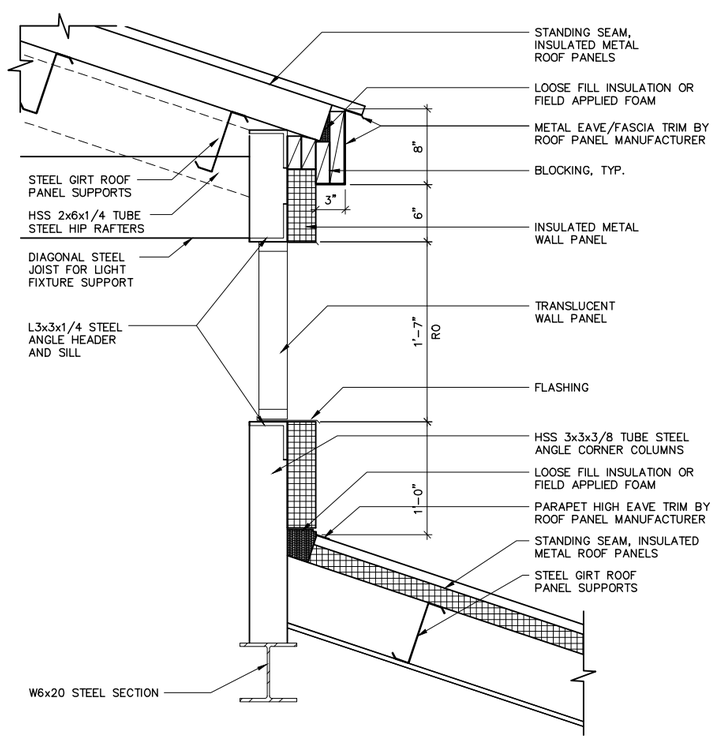

5 CUPOLA SECTION DETAIL

SCALE: 1 1/2"=1'-0"

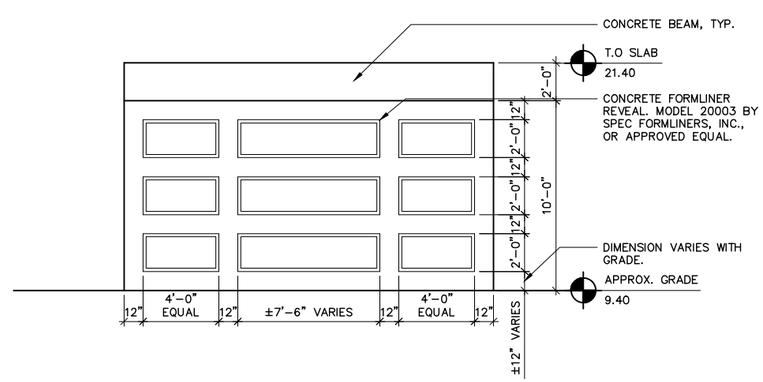

6 FORMWORK PATTERN DETAIL

SCALE: 1/4"=1'-0"

Hazen ARCADIS A JOINT VENTURE

LEGAL ENTITY:
ARCADIS CE, INC.

SEALS

REGISTERED ARCHITECT ERROL ANTONIO DAWKINS 023835 STATE OF NEW YORK 7/21/2020

NASSAU COUNTY, NEW YORK
DEPARTMENT OF PUBLIC WORKS

LONG BEACH WPCP CONSOLIDATION
PUMP STATION CONVERSION

LONG BEACH WASTEWATER POLLUTION CONTROL PLANT

NO.	DATE	ISSUED FOR	BY

COPYRIGHT: 2017 HAZEN AND SAWYER/ ARCADIS A JOINT VENTURE

DATE: JULY 2020
PROJECT NO.: 00726790.0001
FILE NAME: A-05
DESIGNED BY: R. BELLO
DRAWN BY: R. BOBY
CHECKED BY: E. DAWKINS

SHEET TITLE

ARCHITECTURAL

BUILDING AND ROOF DETAILS

SCALE: AS SHOWN

A-05

SHEET 63 OF 112

User: JMA Spec: AUS-NCSMOD File: \\NYJ3FP01\DATA\WHI_CAD\VOL2\ACAD\PROJ\00726790.0001\SHEETS\A-05.DWG Scale:1:1 SavedDate: 7/17/2020 Time:09:52 Plot Date: Mo, Jessica; 7/17/2020; 16:21 ; Layout:A-05

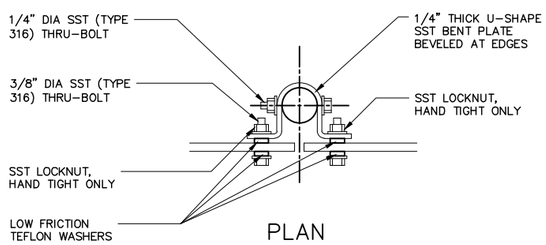

PLAN

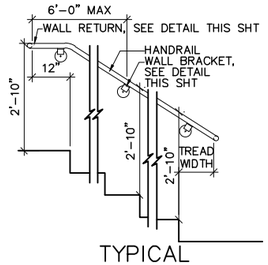

TYPICAL HANDRAIL DETAIL
SCALE: 1/2" = 1'-0"

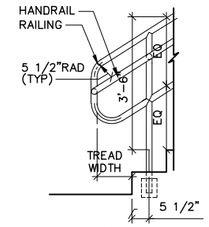

TYPICAL STAIR END DETAILS
SCALE: 1/2" = 1'-0"

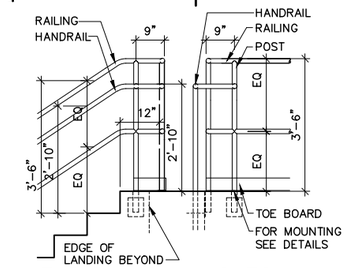

TYPICAL RAILING TO RAILING STAIR CORNER
(RAILING CONTINUOUS AROUND CORNER)
(LANDING EDGE AND NOSING EDGE DO NOT ALIGN)
SCALE: 1/2" = 1'-0"

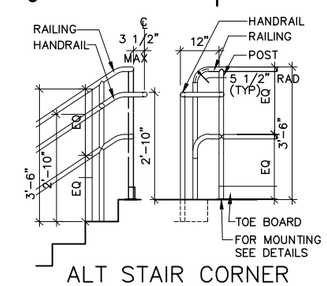

ALT STAIR CORNER
SCALE: 1/2" = 1'-0"
USE ONLY IN LOCATIONS WHERE THE DESIGN FOR THE DISABLED IS NOT REQUIRED. LOCATIONS ARE TO BE APPROVED BY THE ENGINEER.

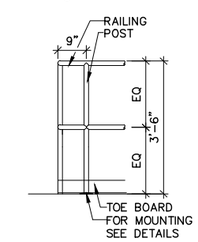

TYPICAL RAILING CORNER
SCALE: 1/2" = 1'-0"

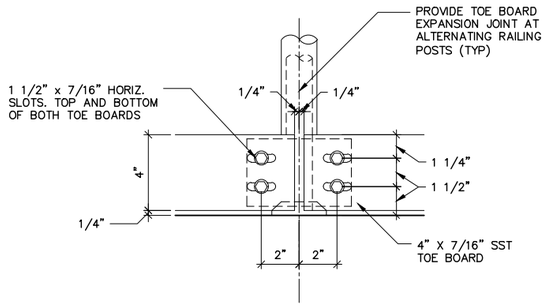

ELEVATION
TOE BOARD EXPANSION JOINT DETAIL
SCALE: 3" = 1'-0"

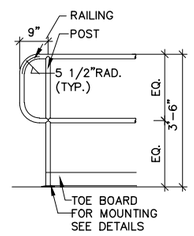

TYPICAL RAILING END
SCALE: 1/2" = 1'-0"

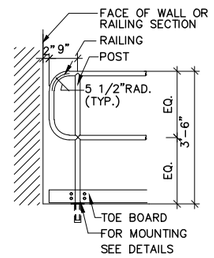

TYPICAL RAILING END
SCALE: 1/2" = 1'-0"

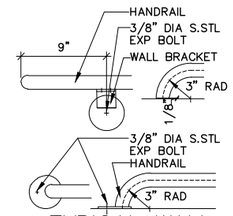

TYPICAL WALL RETURN DETAILS
SCALE: 1 1/2" = 1'-0"

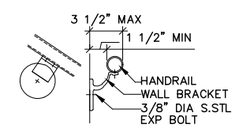

WALL BRACKET DETAIL
SCALE: 1 1/2" = 1'-0"

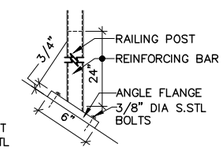

STRINGER MOUNT DETAIL
SCALE: 1 1/2" = 1'-0"

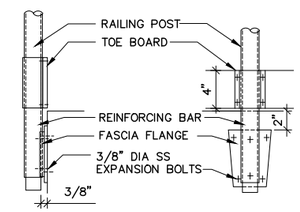

SIDE MOUNT DETAIL
SCALE: 1 1/2" = 1'-0"

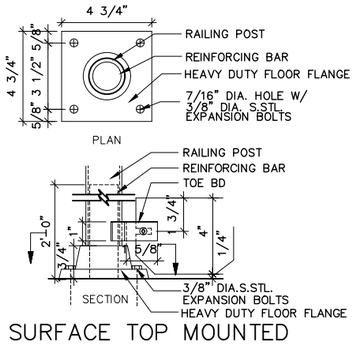

SURFACE TOP MOUNTED
SCALE: 3" = 1'-0"

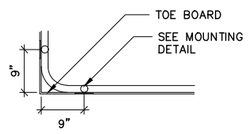

RAILING CORNER DETAIL
SCALE: 3/4" = 1'-0"

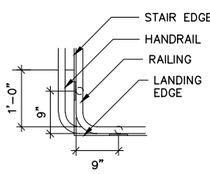

STAIR CORNER DETAIL
SCALE: 3/4" = 1'-0"

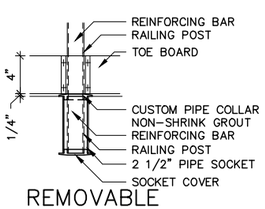

REMOVABLE EMBEDED DETAIL
SCALE: 1 1/2" = 1'-0"

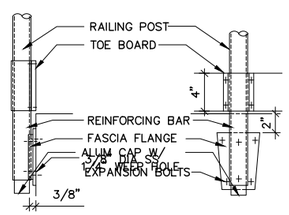

REMOVABLE SIDE MOUNT DETAIL
SCALE: 1 1/2" = 1'-0"

1 TYPICAL RAILING ELEVATIONS AND DETAILS

SCALE: 3" = 1'-0"
SCALE: 1 1/2" = 1'-0"
SCALE: 1/2" = 1'-0"
SCALE: 3/4" = 1'-0"

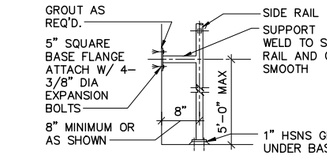

BRACKET AND BASE CONNECTION DETAIL

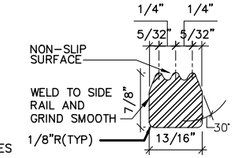

RUNG DETAIL
NOT TO SCALE

3 LADDER DETAILS

SCALE: 3/4" = 1'-0"

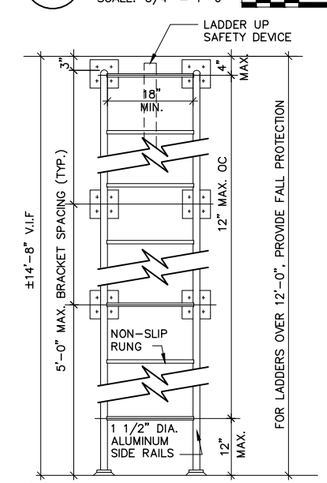

2 LADDER ELEVATION

SCALE: 3/4" = 1'-0"

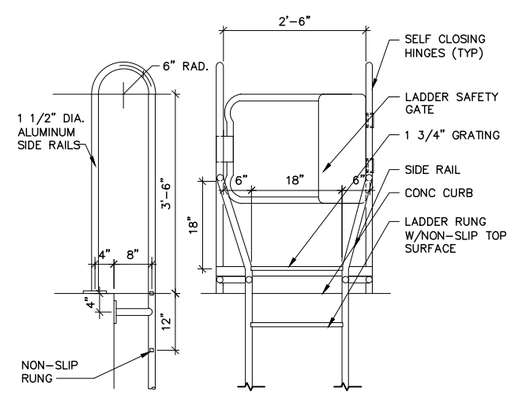

LADDER TO MEZZANINE ELEVATION AND SECTION
SCALE: 3/4" = 1'-0"

4 LADDER DETAILS

SCALE: 3/4" = 1'-0"

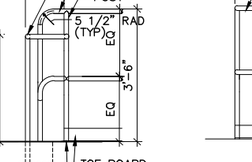

NOTES:
1. MINIMUM 1-FULL HEIGHT CONTINUOUS VERTICAL BAR WITH MATCHING DOWEL TO MATCH SIZE OF TYPICAL WALL REINFORCING UON.
2. HORIZONTAL TRUSS-TYPE REINFORCEMENT SHALL BE CONTINUOUS.

5 MASONRY DETAIL

SCALE: 3" = 1'-0"

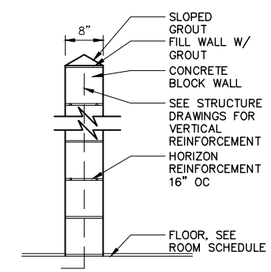

TYPE 1 8" CMU

6 WALL PARTITION

SCALE: 3/4" = 1'-0"

NOTE: THERE SHALL BE NO PENETRATIONS THROUGH WALL

Hazen ARCADIS
A JOINT VENTURE

LEGAL ENTITY:
ARCADIS CE, INC.

SEALS

REGISTERED ARCHITECT ERROL ANTONIO DAWKINS 023835 STATE OF NEW YORK
7/21/2020

NASSAU COUNTY, NEW YORK
DEPARTMENT OF PUBLIC WORKS

LONG BEACH WPCP CONSOLIDATION PUMP STATION CONVERSION

LONG BEACH WASTEWATER POLLUTION CONTROL PLANT

NO.	DATE	ISSUED FOR	BY

COPYRIGHT: 2017 HAZEN AND SAWYER/ ARCADIS A JOINT VENTURE

DATE:	JULY 2020
PROJECT NO.:	00726790.0001
FILE NAME:	A-06
DESIGNED BY:	R. BELLO
DRAWN BY:	R. BOBY
CHECKED BY:	E. DAWKINS

SHEET TITLE

ARCHITECTURAL

TYPICAL RAILING, MASONRY AND MISC DETAILS

SCALE: AS SHOWN

A-06

SHEET 64 OF 112

User:JMA Spec:AUS-NCSMOD File:\\NY03FP01\DATA\WH_CAD\VOL2\ACAD\PROJ\00726790.0001\SHEETS\A-06.DWG Scale:1:1 SavedDate:7/17/2020 Time:09:17 Plot Date: Mo, Jessica; 7/17/2020; 16:23 ; Layout:A-06

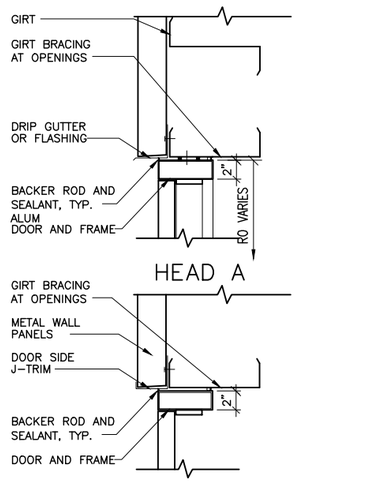

HEAD A

JAMB A

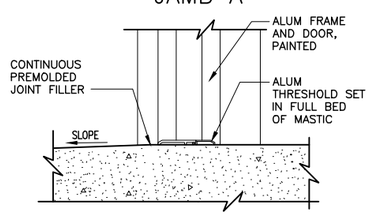

SILL A

1 DOOR DETAIL

SCALE: 1 1/2"=1'-0"

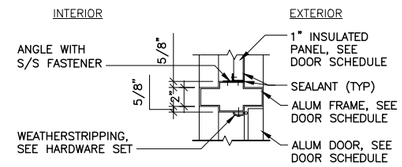

REMOVABLE TRANSOM A

2 TRANSOM BAR DETAIL

SCALE: 1 1/2"=1'-0"

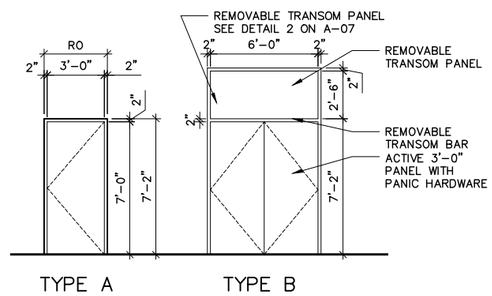

TYPE A TYPE B

3 DOOR ELEVATIONS

SCALE: 1/4"=1'-0"

DOOR AND FRAME SCHEDULE

BUILDING	DOOR #	DOOR SIZE WDT	DOOR SIZE HT	DOOR SIZE THK	FRAME SIZE WDT	FRAME SIZE HT	DETAILS HEAD	DETAILS JAMB	DETAILS SILL	MATL	DOOR TYPE	HDW SET	FIRE RATING LABEL	NOTES
ELECTRICAL BUILDING	100-01	6'-0"	7'-0"	1 3/4"	6'-4"	10'-0"	A	A	A	1	B	2	–	
ELECTRICAL BUILDING	100-02	3'-0"	7'-0"	1 3/4"	3'-4"	7'-2"	A	A	A	1	A	1	–	

ROOM FINISH SCHEDULE

BUILDING	ROOM #	ROOM NAME	FLOOR MAT'L	FLOOR FIN	BASE MAT'L	BASE FIN	WALLS N MAT'L	WALLS N FIN	WALLS N CLR	WALLS S MATL	WALLS S FIN	WALLS S CLR	WALLS E MATL	WALLS E FIN	WALLS E CLR	WALLS W MATL	WALLS W FIN	WALLS W CLR	CEILING MATL	CEILING FIN	NOTES
ELECTRICAL BUILDING	100	ELECTRICAL ROOM	CH		–	–	WP		WH	WP		WH	WP		WH	WP		WH	OPEN	–	
INFLUENT CHAMBER	001	INFLUENT CHAMBER	C/E-C		–	–	E-C	P		E-C	P		E-C	P		E-C	P		OPEN	–	
INFLUENT CHAMBER	002	DRY PIT	C/E-C		–	–	E-C	P		E-C	P		E-C	P		E-C	P		OPEN	–	
INFLUENT CHAMBER	003	DRY PIT	C/E-C		–	–	E-C	P		E-C	P		E-C	P		E-C	P		OPEN	P	

NOTES:

1. FIELD VERIFY ALL DIMENSIONS AND CONDITIONS.
2. FOR DOOR HARDWARE TYPES SEE SPECIFICATIONS.
3. FOR DOOR HAND, REFERENCE ARCHITECTURAL PLAN DRAWINGS.

DOOR MATERIALS:

1 – ALUMINUM DOOR

ROOM FINISH LEGEND

FLOORING	
E-CH	EXISTING CONCRETE W/ HARDENER
CH	CONCRETE W/ HARDENER
GT	GRATING (SEE STRUCTURAL)
C	CONCRETE
CEILING	
CONC	CONCRETE
MD	METAL DECK & STRUCTURAL BEAMS
OPEN	OPEN TO UNDERSIDE OF STRUCTURE
WALLS	
CB	CONCRETE BLOCK
CIPC	CAST IN PLACE CONCRETE
CONC	CONCRETE
E-C	EXISTING CONCRETE
WP	WALL PANEL
P	PAINT
WH	WHITE

NOTES:
1. REFER TO PAINTING SPECIFICATION SECTION 09900 FOR PAINTING SCHEDULE.
2. EXTERIOR STAIRS SHALL BE ALUMINUM.

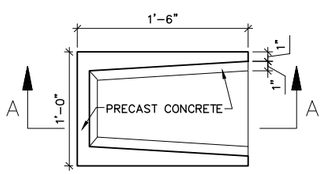

PLAN

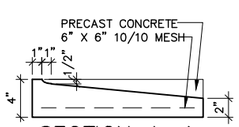

SECTION A–A

4 TYPICAL SPLASH BLOCK DETAIL

SCALE: 1 1/2"=1'-0"

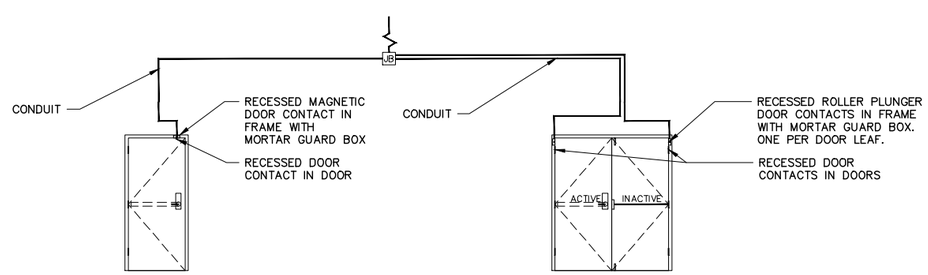

SINGLE DOOR ELECTRIC STRIKE

NOTES :
1. SPECIFICATIONS 08710 SHALL IDENTIFY THE FOLLOWING HARDWARE:
1.1. DOOR CONTACTS

PAIR DOOR ELECTRIC STRIKE

ACCESS AND CONTROL NOTES:

1. ALL CONDUITS SHALL BE BURIED IN FRAMES TO THE FULLEST EXTENT POSSIBLE.

5 ACCESS CONTROL LOCATION DIAGRAM

SCALE: 1/4"=1'-0"

Hazen ARCADIS A JOINT VENTURE

LEGAL ENTITY:
ARCADIS CE, INC.

SEALS

REGISTERED ARCHITECT ERROL ANTONIO DAWKINS 023835 STATE OF NEW YORK 7/21/2020

NASSAU COUNTY, NEW YORK
DEPARTMENT OF PUBLIC WORKS

LONG BEACH WPCP CONSOLIDATION
PUMP STATION CONVERSION

LONG BEACH WASTEWATER POLLUTION CONTROL PLANT

NO.	DATE	ISSUED FOR	BY

COPYRIGHT: 2017 HAZEN AND SAWYER/ ARCADIS A JOINT VENTURE

DATE: JULY 2020
PROJECT NO.: 00726790.0001
FILE NAME: A-07
DESIGNED BY: R. BELLO
DRAWN BY: R. BOBY
CHECKED BY: E. DAWKINS

SHEET TITLE
ARCHITECTURAL

TYPICAL DOOR DETAILS AND SCHEDULES

SCALE: AS SHOWN

A-07

SHEET 65 OF 112

User: JMA Spec: AUS-NCSMOD File: \\NY03FP01\DATA\WH_CAD\VOL2\ACAD\PROJ\00726790.0001\SHEETS\A-07.DWG Scale:1:1 SavedDate:7/17/2020 Time:09:50 Plot Date: Mo, Jessica; 7/17/2020; 16:25 ; Layout:A-07

TYPE A:
BUILDING SIGN

TYPE B:
NOTICEABLE MESSAGE

TYPE C:
STOP SIGN

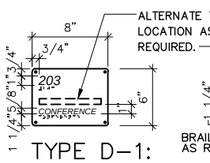

TYPE D-1:
ROOM NAME
& NUMBER(ANSI)

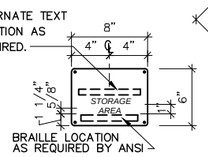

TYPE D-2
AREA NAME

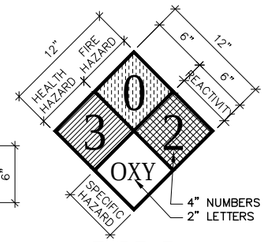

TYPE E-1:
HAZARD
RATING SIGN

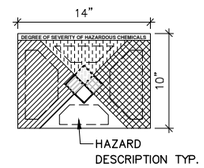

TYPE E-2:
HAZARD RATING
SIGN WITH
EMERGENCY
GUIDE

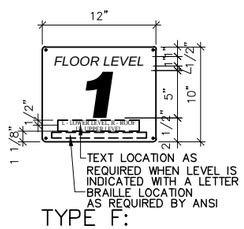

TYPE F:
FLOOR
NUMBERING SIGN

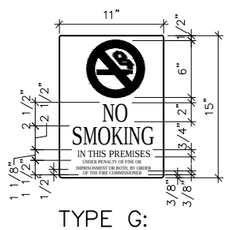

TYPE G:
EXIT / FIRE
PREVENTION SIGN
NOTE: CONFORM WITH BUILDING CODE STANDARDS.

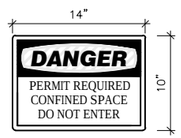

TYPE J:
DANGER

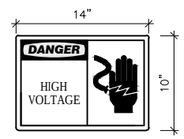

TYPE K:
DANGER

TYPE L-1:
CAUTION

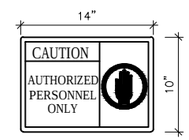

TYPE L-2:
CAUTION

TYPE M-1:
WARNING

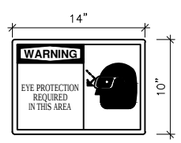

TYPE M-2:
WARNING

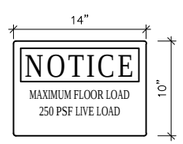

TYPE N-1:
NOTICE

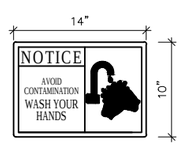

TYPE N-2:
NOTICE

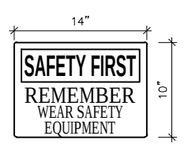

TYPE O:
GENERAL
SAFETY

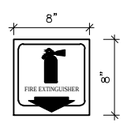

TYPE P:
FIRE EQUIPMENT
2-WAY SIGN

1 SIGNAGE TYPES
SCALE: 1 1/2"=1'-0"

NOTES:

1. FINAL SIGNAGE WORDING OF ALL SIGNS TO BE DETERMINED AFTER AWARD OF CONTRACT.
2. IN ADDITION TO SIGN DESIGNATIONS SHOWN ON PLANS, PROVIDE THE FOLLOWING SIGNS OF EACH TYPE SHOWN ON THIS DRAWING. TEXT AND LOCATION TO BE PROVIDED TO CONTRACTOR AFTER AWARD OF CONTRACT.

BUILDING NAMES	SIGNAGE TYPE											
	B	C	D	E	F	G	K	L	M	N	O	P
ELECTRICAL BUILDING	–	–	1	–	–	–	–	–	–	1	1	–
PUMP STATION	5	2	1	–	–	1	–	1	2	2	2	–
GENERATOR PLATFORM	–	–	1	2	–	–	2	–	–	1	1	–

3. FOR SIGNAGE LOCATIONS REFERENCE DRAWINGS A-09.
4. THE SIGNS SHOWN ON THIS SHEET ARE A COMPREHENSIVE STANDARD GUIDE INTENDED TO GRAPHICALLY INDICATE THE APPEARANCE OF THE SIGNS. THIS SHEET IS FOR GENERAL USE ON THE PROJECT. THEREFORE NOT ALL THE SIGNS CONTAINED ON THIS SHEET ARE NECESSARILY USED ON THIS PARTICULAR PROJECT AND SHOULD BE USED FOR CLARIFICATION ONLY.
5. PROVIDE ALL PERMANENT DIRECTIONAL/INFORMATIONAL, ROOM NAME, AREA NAME, ACCESSIBLE AREA, FLOOR NUMBERING, STAIR IDENTIFICATION, FIRE PREVENTION AND RESTRICTION SIGNS WITH BOTH RAISED TEXT AND BRAILLE TO COMPLY WITH ANSI A117.1, THE AMERICANS WITH DISABILITIES ACT OF 1990, OSHA REGULATIONS, NFPA GUIDELINES, AND THE PENNSYLVANIA STATE BUILDING CODE. FIELD VERIFY EXACT LOCATION OF SIGNS WITH OWNER AND ENGINEER.
6. PROVIDE HAZARD RATING SIGNS / RIGHT-TO-KNOW SIGNS, LABELS AND TAGS TO COMPLY WITH NFPA 704, OSHA 1910.1200, AND OSHA SUBPART Z, FOR PROPER IDENTIFICATION OF ALL THE CHEMICALS AND MATERIALS PRESENT, THE HAZARDS ASSOCIATED WITH THESE CHEMICALS AND MATERIALS, AND WHERE THEY ARE LOCATED. VERIFY EXACT INFORMATION FOR SIGNS AND LOCATION OF SIGNS IN THE FIELD WITH ENGINEER.
7. PROVIDE ALL ACCIDENT PREVENTION, HEALTH, SAFETY AND WARNING SIGNS IN COMPLIANCE WITH ANSI Z535.1, ANSI Z535.2, ANSI Z535.3 AND OSHA 1910.44 AND 1910.145. FIELD VERIFY EXACT LOCATION OF SIGNS WITH OWNER AND ENGINEER.
8. FIELD VERIFY WHICH SIGNS REQUIRE BEING SUSPENDED, AND WHAT THEY WILL BE SUSPENDED FROM.
9. PROVIDE ENGINEER APPROVED MATERIALS AND FASTENERS TO SECURELY ATTACH AND SUSPEND THESE SIGNS. SUSP. DOUBLE SIDED SIGN – INDICATES SIGNS THAT WILL IN SOME CASES NEED TO BE SUSPENDED.
10. THOSE THAT ARE SUSPENDED WILL BE A CUSTOM DOUBLE SIDED SIGN. FIELD VERIFY EXACT LOCATION. FIELD VERIFY DIRECTION ARROW HEADS SHOULD BE POINTING ON ALL DIRECTIONAL SIGNS.
11. VERIFY EXACT LOCATION OF SIGNS WITH OWNER AND ENGINEER. ALL SIGNS SHALL BE PLACED SO THAT THEY ARE READILY VISIBLE AND READABLE.
12. DOORS SHALL NOT BLOCK SIGNS WHEN IN OPEN POSITION. VERIFY EXACT ARRANGEMENT AND PLACEMENT OF SIGNS WITH OWNER AND ENGINEER.

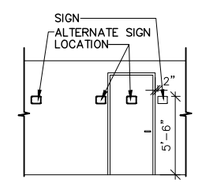

ELEVATION 1
NON ANSI
SCALE: 3/16" = 1'-0"

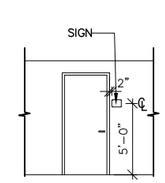

ELEVATION 2
ANSI STANDARD
(ON LATCH SIDE)
SCALE: 3/16" = 1'-0"

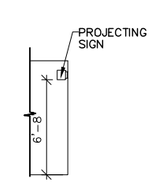

ELEVATION 3
(PROJECTED SIGN)
SCALE: 3/16" = 1'-0"

Hazen ARCADIS
A JOINT VENTURE

LEGAL ENTITY:
ARCADIS CE, INC.

SEALS

REGISTERED ARCHITECT ERROL ANTONIO DAWKINS 023835 STATE OF NEW YORK
7/21/2020

NASSAU COUNTY, NEW YORK
DEPARTMENT OF PUBLIC WORKS

LONG BEACH WPCP CONSOLIDATION
PUMP STATION CONVERSION

LONG BEACH WASTEWATER POLLUTION CONTROL PLANT

NO.	DATE	ISSUED FOR	BY

COPYRIGHT: 2017 HAZEN AND SAWYER/ ARCADIS A JOINT VENTURE

DATE: JULY 2020
PROJECT NO.: 00726790.0001
FILE NAME: A-08
DESIGNED BY: R. BELLO
DRAWN BY: R. BOBY
CHECKED BY: E. DAWKINS

SHEET TITLE
ARCHITECTURAL
SIGNAGE

SCALE: AS SHOWN

A-08
SHEET 66 OF 112

User:JMA Spec:AUS-NCSMOD File:\\NY03FP01\DATA\WHI_CAD\VOL2\ACAD\PROJ\00726790.0001\SHEETS\A-08.DWG Scale:1:1 SavedDate:7/17/2020 Time:09:49 Plot Date: Mo, Jessica; 7/17/2020; 16:29 ; Layout:A-08

LEGEND

##	INDICATES DIRECTION OF EGRESS PATH ## IS DISTANCE IN FEET TO EXIT FROM SQUARE DOT TO ARROW
SF	SQUARE FEET
OLF	OCCUPANT LOAD FACTOR
OL	OCCUPANT LOAD
SPR	SPRINKLER
NA	NOT APPLICABLE
E	EXIT SIGN LOCATION
OC	OCCUPANT CLASSIFICATION
▲	FIRE EXTINGUISHER, DRY CHEMICAL
▲	FIRE EXTINGUISHER, CO2

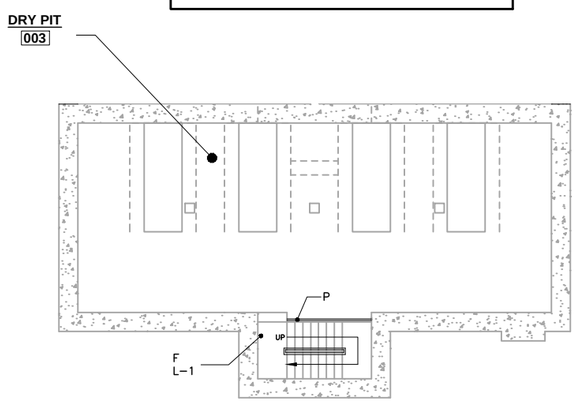

PUMP STATION BOTTOM FLOOR PLAN @ EL. -12.30

SCALE: 1/8" = 1'-0"

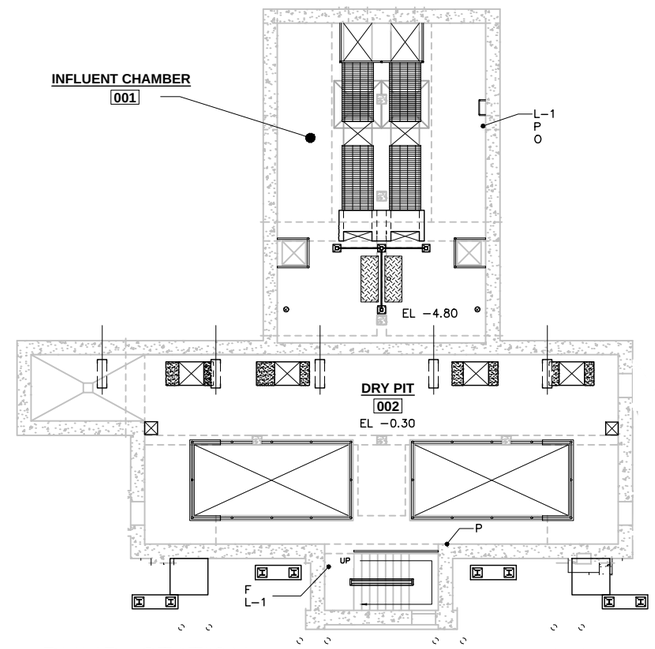

PUMP STATION INTERMEDIATE FLOOR PLAN @ EL. -0.30

SCALE: 1/8" = 1'-0"

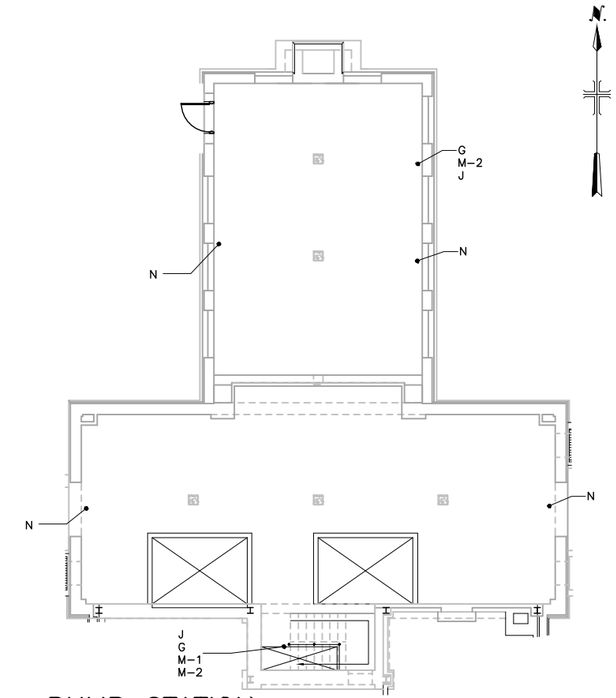

PUMP STATION ROOF PLAN @ EL. 9.89

SCALE: 1/8" = 1'-0"

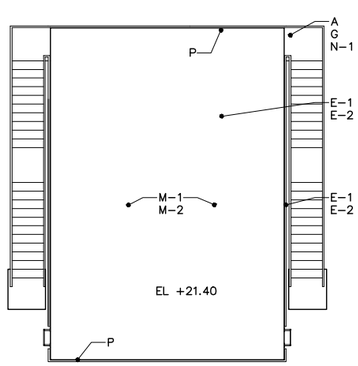

GENERATOR PLATFORM PLAN @ EL. 21.40

SCALE: 1/8" = 1'-0"

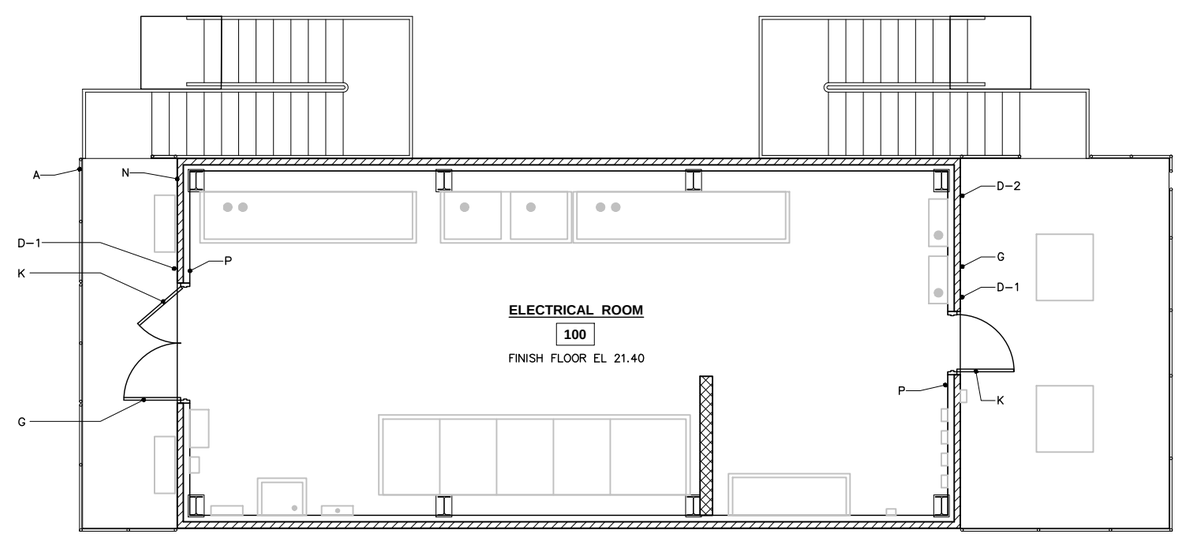

ELECTRICAL BUILDING FLOOR PLAN @ EL. 21.40

SCALE: 1/4" = 1'-0"

Hazen ARCADIS
A JOINT VENTURE

LEGAL ENTITY:
ARCADIS CE, INC.

SEALS

REGISTERED ARCHITECT ERROL ANTONIO DAWKINS 023835 STATE OF NEW YORK 7/21/2020

NASSAU COUNTY, NEW YORK
DEPARTMENT OF PUBLIC WORKS

LONG BEACH WPCP CONSOLIDATION
PUMP STATION CONVERSION

LONG BEACH WASTEWATER POLLUTION CONTROL PLANT

NO.	DATE	ISSUED FOR	BY

COPYRIGHT: 2017 HAZEN AND SAWYER/ ARCADIS A JOINT VENTURE

DATE:	JULY 2020
PROJECT NO.:	00726790.0001
FILE NAME:	A-09
DESIGNED BY:	R. BELLO
DRAWN BY:	R. BOBY
CHECKED BY:	E. DAWKINS

SHEET TITLE

ARCHITECTURAL

SIGNAGE PLANS

SCALE: AS SHOWN

A-09

SHEET 67 OF 112

User:DMARTINS Spec:AUS-NCSMOD File:\\ARCADIS-US.COM\OFFICEDATA\WHITEPLAINS-NY\WHI_CAD\V0L2\ACAD\PROJ\00726790.0001\SHEETS\A-09.DWG Scale:1:1 SavedDate:7/20/2020 Time:09:18 Plot Date: Martins, Denise; 7/20/2020; 09:50 ; Layout:A-09

NOTES:

1. REFER TO I-01 FOR INSTRUMENT TAGGING CONVENTION AND INSTRUMENT ABBREVIATIONS.

SCHEMATIC EQUIPMENT LEGEND

SUBMERSIBLE PUMP

CENTRIFUGAL PUMP/ CENTRIFUGAL FAN

PIPING SYMBOLS

WELD NECK FLANGE

FLANGED

MECHANICAL JOINT

GROOVED END

WELDED

CONCRETE BELL & SPIGOT

CPVC/PVC/COPPER

FASTITE (RESTRAINED JOINT)

FORGED STEEL SOCKET/THREADED

HDPE IPS (FLANGED)

HDPE IPS

CAST IRON HUBLESS

FLANGED FLARE

BLIND FLANGE

EXPANSION JOINT

FLEXIBLE COUPLING

FLANGED COUPLING ADAPTER

FLANGED COUPLING ADAPTER

DISMANTLING JOINT

HARNESSED DISMANTLING JOINT

SCHEMATIC VALVE LEGEND

SYM PLAN ELEV

AIR RELEASE VALVE (AR)

AIR/VACUUM VALVE (AV)
COMBINATION AIR VALVE (CA)

BALL VALVE (BA)

BALL CHECK VALVE (BC)

BUTTERFLY VALVE (BV)

BUTTERFLY DAMPER (BD)

CHECK VALVE (CH)

TELESCOPING VALVE (TV)

DIAPHRAGM VALVE (DV)

SUCTION FOOT VALVE (FV)

THREE-WAY PLUG VALVE (TW)

FOUR-WAY VALVE (FW)

GLOBE VALVE (GL)

GATE VALVE (GV)
CURB STOP (CS)

KNIFE GATE VALVE (KV)

MUD VALVE (MD)

NEEDLE VALVE (NV)

PINCH VALVE (PI)

AUTOMATIC PRESSURE REDUCING VALVES (PR)

AUTOMATIC PRESSURE SUSTAINING VALVES (PS)

ECCENTRIC PLUG VALVE (PV)

RELIEF VALVE (RV)

SLUICE GATE (SL)

SLIDE GATE (SG)
SLIDE PLATE (SP)

SOLENOID VALVE (SV)

FO=FAIL OPEN
FC=FAIL CLOSED

ABBREVIATIONS

ø	DIAMETER	MIN	MINIMUM
&	AND	MJ	MECHANICAL JOINT
BA	BALL VALVE	MW	MAKE-UP WATER
BV	BUTTERFLY VALVE	NO.	NUMBER
℄, CL	CENTERLINE	OF	OVERFLOW
CONC	CONCRETE	OPP	OPPOSITE
CONT	CONTAINMENT	PA	PROCESS AIR
CPVC	CHLORINATED POLYVINYL CHLORIDE	PE	PLAIN END
CW	CITY WATER	pH	POTENTIAL HYDROGEN
DI	DUCTILE IRON	PLN	PLAIN
DN	DOWN	PSL	PRIMARY SLUDGE
DR	DRAIN	PT	POINT
EL	ELEVATION	PV	PLUG VALVE
EMERG	EMERGENCY	RECIRC	RECIRCULATION
EQH	EQUIPMENT HATCH	REQ'D	REQUIRED
FE	FLOW ELEMENT	SCH	SCHEDULE
F.F.	FINISHED FLOOR	SCV	SERVICE CHECK VALVE
FLG	FLANGE	SL	SLUDGE LINE
FL	FLOOR	SPD	SUMP PUMP DISCHARGE
FOS	FUEL OIL SUPPLY	SPW	SPRAY WATER
FRP	FIBERGLASS REINFORCED PLASTIC	SQ.	SQUARE
GAL	GALLON	SS	STAINLESS STEAL
GV	GATE VALVE	SW	SERVICE WATER
H.P.	HIGH POINT	TEMP	TEMPERATURE
I.D.	INTERIOR DIMENSIONS	THRU	THROUGH
INV	INVERT	TOC	TOP OF CONCRETE
LF	LINEAR FEET	TP	TOP OF PIPE
LG	LONG	TYP	TYPICAL
L.P.	LOW POINT	W/	WITH
L.R.	LONG RADIUS	WS	WATER SURFACE
M	MOTOR		WATER SURFACE ELEVATION
MAX	MAXIMUM		
MCC	MOTOR CONTROL CENTER		

Hazen ARCADIS
A JOINT VENTURE

LEGAL ENTITY:
ARCADIS CE, INC.

SEALS

STATE OF NEW YORK
NANGSTON S. JOAFS
No. 093357
LICENSED PROFESSIONAL ENGINEER
7/20

NASSAU COUNTY, NEW YORK
DEPARTMENT OF PUBLIC WORKS

LONG BEACH WPCP CONSOLIDATION PUMP STATION CONVERSION

LONG BEACH WASTEWATER POLLUTION CONTROL PLANT

NO.	DATE	ISSUED FOR	BY

COPYRIGHT: 2017 HAZEN AND SAWYER/ ARCADIS A JOINT VENTURE

DATE: JULY 2020
PROJECT NO.: 00726790.0001
FILE NAME: M-01
DESIGNED BY: L. JONES
DRAWN BY: J. MA
CHECKED BY: L. JONES

SHEET TITLE

MECHANICAL

LEGEND, SYMBOLS, ABBREVIATIONS, AND GENERAL NOTES

SCALE: NOT TO SCALE

M-01

SHEET 68 OF 112

User:SWOHLFAHRT Spec:AUS-NCSMOD File:\\NY03FP01\DATA\WHL_CAD\VOL2\ACAD\PROJ\00726790.0001\SHEETS\M-01.DWG Scale:1:1 SavedDate:6/30/2020 Time:13:30 Plot Date: Wohlfahrt, Sarah; 7/20/2020; 13:52 ; Layout:LAYOUT1

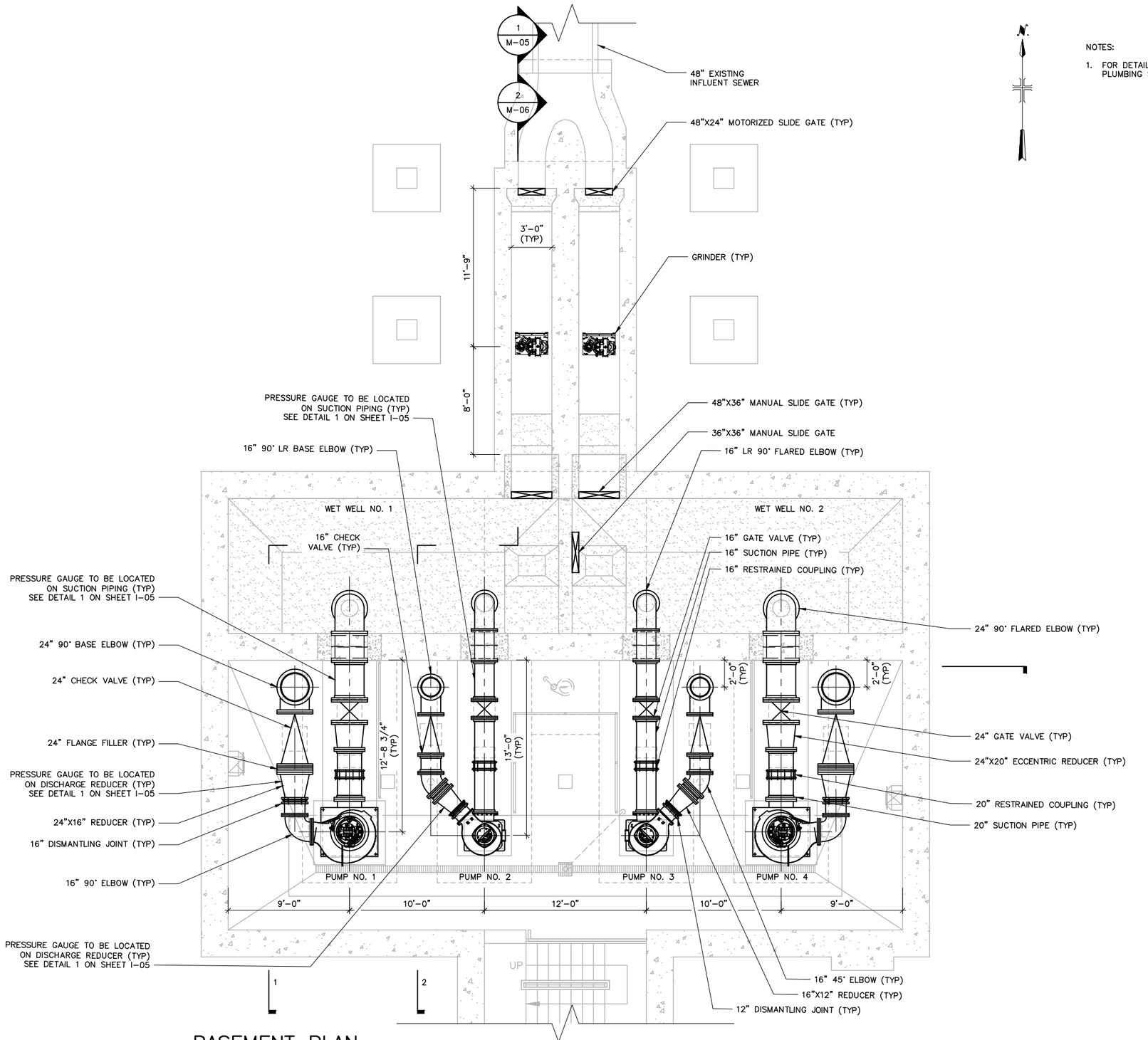

BASEMENT PLAN

SCALE: 1/4" = 1'-0"

0 2' 4' 8'

NOTES:

1. FOR DETAILS ON THE SUMP PUMP, SEE PLUMBING SHEETS.

Hazen ARCADIS
A JOINT VENTURE

LEGAL ENTITY:
ARCADIS CE, INC.

SEALS

STATE OF NEW YORK
WINGSTON S. JOAFS
No. 093357
LICENSED PROFESSIONAL ENGINEER
7/20

NASSAU COUNTY, NEW YORK
DEPARTMENT OF PUBLIC WORKS

LONG BEACH WPCP CONSOLIDATION PUMP STATION CONVERSION

LONG BEACH WASTEWATER POLLUTION CONTROL PLANT

NO.	DATE	ISSUED FOR	BY

COPYRIGHT: 2017 HAZEN AND SAWYER/ ARCADIS A JOINT VENTURE

DATE:	JULY 2020
PROJECT NO.:	00726790.0001
FILE NAME:	M-02
DESIGNED BY:	L. JONES
DRAWN BY:	J. MA
CHECKED BY:	L. JONES

SHEET TITLE

MECHANICAL

PUMP STATION BOTTOM PLAN

SCALE: 1/4" = 1'-0"

M-02

SHEET 69 OF 112

User: JMA Spec: AUS-NCSMOD File: \\NY03FP01\DATA\WH_CAD\V0L2\ACAD\PROJ\00726790.0001\SHEETS\M-02.DWG Scale: 1:1 SavedDate: 7/21/2020 Time: 08:13 Plot Date: Mo, Jessica; 7/21/2020; 08:13 ; Layout: LAYOUT1

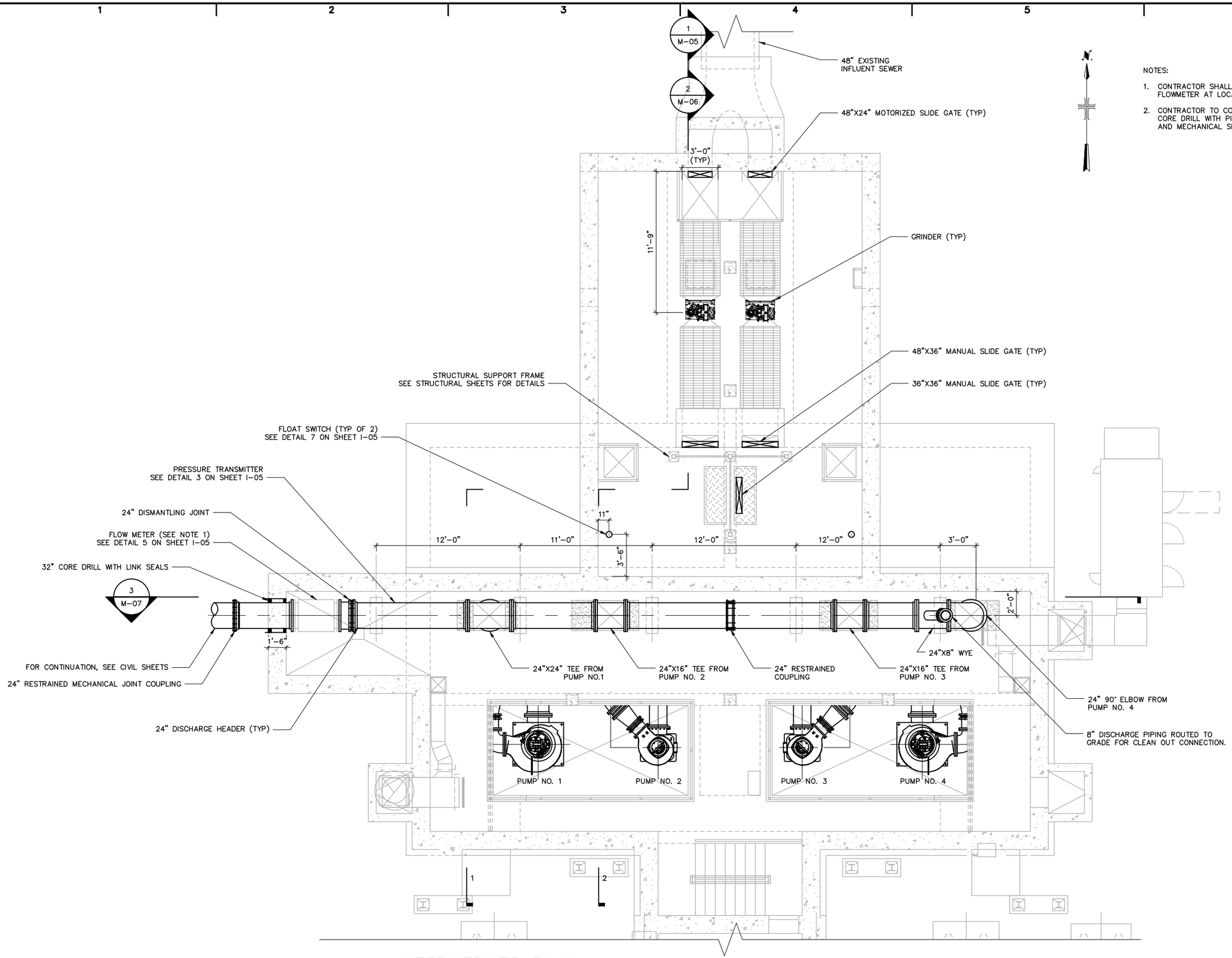

INTERMEDIATE PLAN

SCALE: 1/4" = 1'-0"

NOTES:

1. CONTRACTOR SHALL RE-INSTALL EXISTING FLOWMETER AT LOCATION SHOWN.
2. CONTRACTOR TO COORDINATE SIZE OF CORE DRILL WITH PIPE OUTER DIAMETER AND MECHANICAL SEAL SUPPLIER.

Hazen ARCADIS
A JOINT VENTURE

LEGAL ENTITY:
ARCADIS CE, INC.

SEALS

STATE OF NEW YORK
NANGSTON S. JOAFS
No. 093357
LICENSED PROFESSIONAL ENGINEER
7/20

NASSAU COUNTY, NEW YORK
DEPARTMENT OF PUBLIC WORKS

LONG BEACH WPCP CONSOLIDATION
PUMP STATION CONVERSION

LONG BEACH WASTEWATER POLLUTION CONTROL PLANT

NO.	DATE	ISSUED FOR	BY

COPYRIGHT: 2017 HAZEN AND SAWYER/ ARCADIS A JOINT VENTURE

DATE:	JULY 2020
PROJECT NO.:	00726790.0001
FILE NAME:	M-03
DESIGNED BY:	L. JONES
DRAWN BY:	J. MA
CHECKED BY:	L. JONES

SHEET TITLE

MECHANICAL

PUMP STATION INTERMEDIATE PLAN

SCALE: 1/4" = 1'-0"

M-03

SHEET 70 OF 112

User:SWOHLFAHRT Spec:AUS-NCSMOD File:\\NY03FP01\DATA\WH_CAD\VOL2\ACAD\PROJ\00726790.0001\SHEETS\M-03.DWG Scale:1:1 SavedDate:6/30/2020 Time:13:36 Plot Date: Wohlfahrt, Sarah; 7/20/2020; 14:24 ; Layout:LAYOUT1

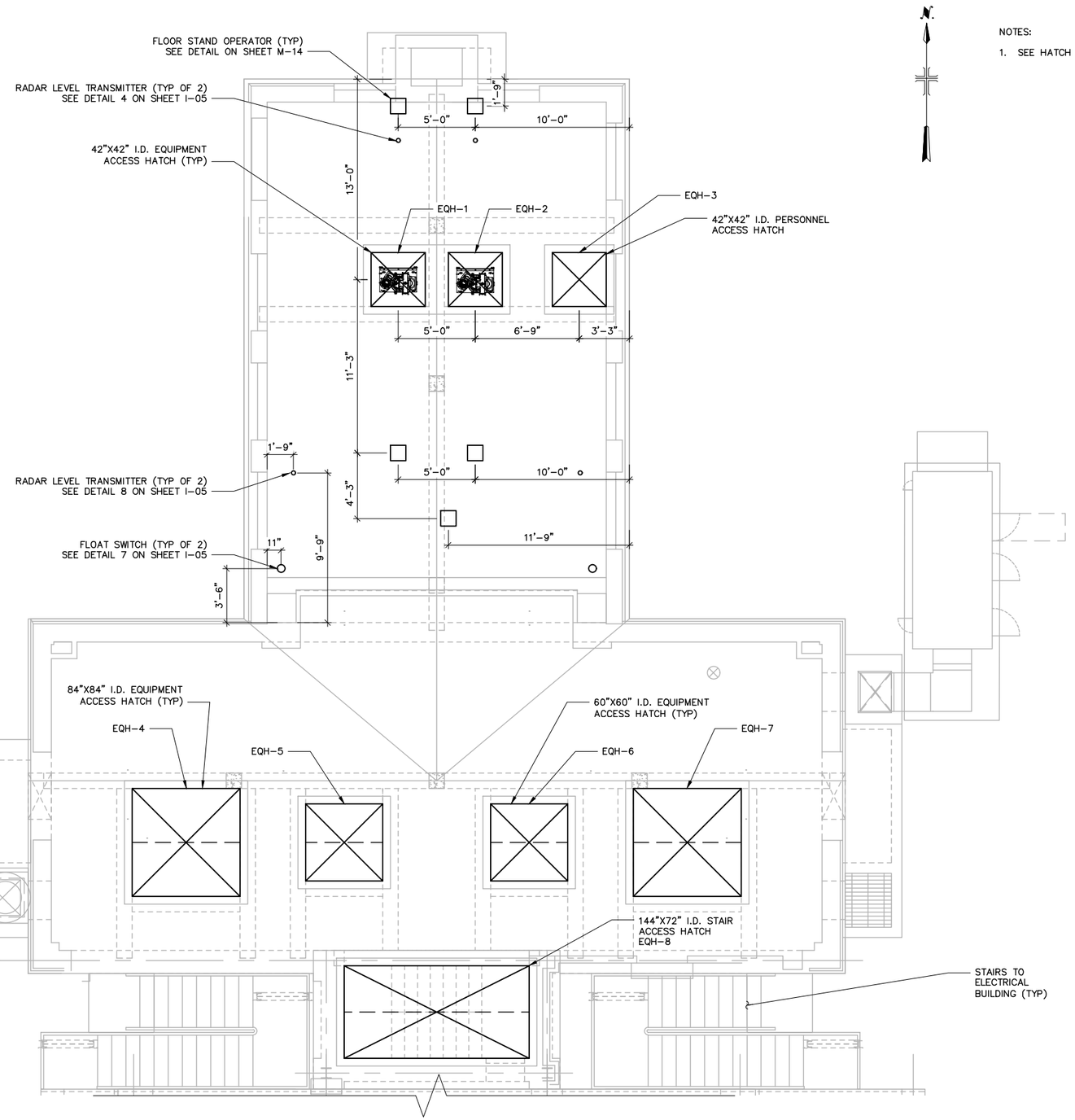

TOP PLAN

SCALE: 1/4" = 1'-0"

0 2' 4' 8'

N

NOTES:

1. SEE HATCH SCHEDULE ON M-12

Hazen ARCADIS
A JOINT VENTURE

LEGAL ENTITY:
ARCADIS CE, INC.

SEALS

STATE OF NEW YORK
NANGSTON S. JOAFS
No. 093357
LICENSED PROFESSIONAL ENGINEER
7/20

NASSAU COUNTY, NEW YORK
DEPARTMENT OF PUBLIC WORKS

LONG BEACH WPCP
CONSOLIDATION
PUMP STATION CONVERSION

LONG BEACH WASTEWATER
POLLUTION CONTROL PLANT

NO.	DATE	ISSUED FOR	BY

COPYRIGHT: 2017 HAZEN AND SAWYER/
ARCADIS A JOINT VENTURE

DATE: JULY 2020
PROJECT NO.: 00726790.0001
FILE NAME: M-04
DESIGNED BY: L. JONES
DRAWN BY: J. MA
CHECKED BY: L. JONES

SHEET TITLE

MECHANICAL

PUMP STATION
TOP PLAN

SCALE:
1/4" = 1'-0"

M-04

SHEET 71 OF 112

User: SWOHLFAHRT Spec: AUS-NCSMOD File: \\WY03FP01\DATA\WHI_CAD\VOL2\ACAD\PROJ\00726790.0001\SHEETS\M-04.DWG Scale: 1:1 SavedDate: 6/30/2020 Time: 13:37 Plot Date: Wohlfahrt, Sarah; 7/20/2020; 14:30 ; Layout: LAYOUT1

NOTES:

1. PIPE SHALL BE ROUTED THROUGH OPENING IN SLAB. SEE DRAWINGS S-03 FOR DETAILS.

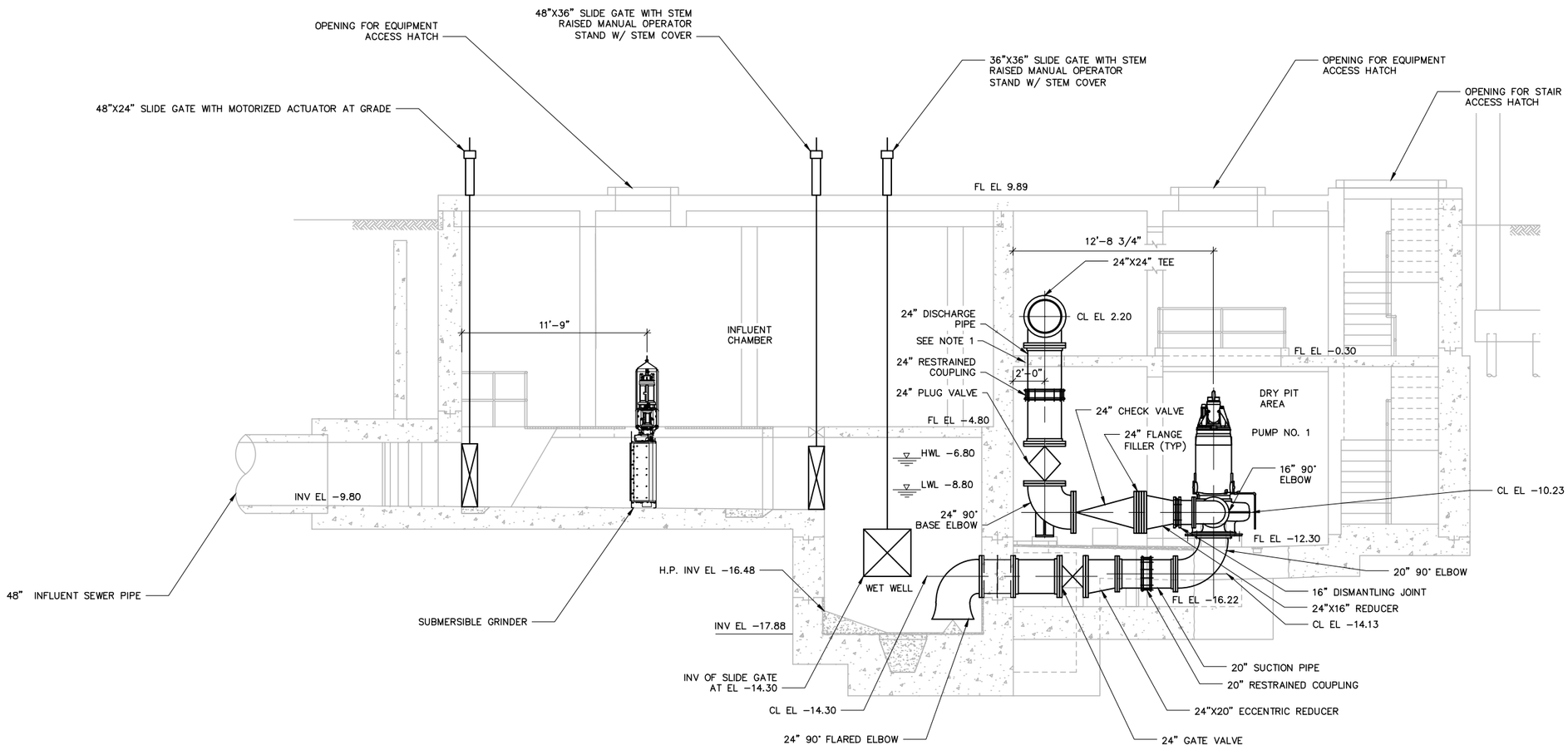

1 M-02 SECTION

SCALE: 1/4" = 1'-0"

0 2' 4' 8'

Hazen ARCADIS A JOINT VENTURE

LEGAL ENTITY:
ARCADIS CE, INC.

SEALS

STATE OF NEW YORK · NANGSTON S. JONES · No. 093357 · LICENSED PROFESSIONAL ENGINEER

NASSAU COUNTY, NEW YORK
DEPARTMENT OF PUBLIC WORKS

LONG BEACH WPCP CONSOLIDATION PUMP STATION CONVERSION

LONG BEACH WASTEWATER POLLUTION CONTROL PLANT

NO.	DATE	ISSUED FOR	BY

COPYRIGHT: 2017 HAZEN AND SAWYER/ ARCADIS A JOINT VENTURE

DATE: JULY 2020
PROJECT NO.: 00726790.0001
FILE NAME: M-05
DESIGNED BY: L. JONES
DRAWN BY: J. MA
CHECKED BY: L. JONES

SHEET TITLE

MECHANICAL

PUMP STATION SECTION I

SCALE: 1/4" = 1'-0"

M-05

SHEET 72 OF 112

User:JMA Spec:AUS-NCSMOD File:\\NY03FP01\DATA\WHI_CAD\V0L2\ACAD\PROJ\00726790.0001\SHEETS\M-05.DWG Scale:1:1 SavedDate:7/20/2020 Time:14:33 Plot Date: Mo, Jessica; 7/21/2020; 07:51 ; Layout:LAYOUT1

NOTES:

1. PIPE SHALL BE ROUTED THROUGH OPENING IN SLAB. SEE DRAWINGS S-03 FOR DETAILS.

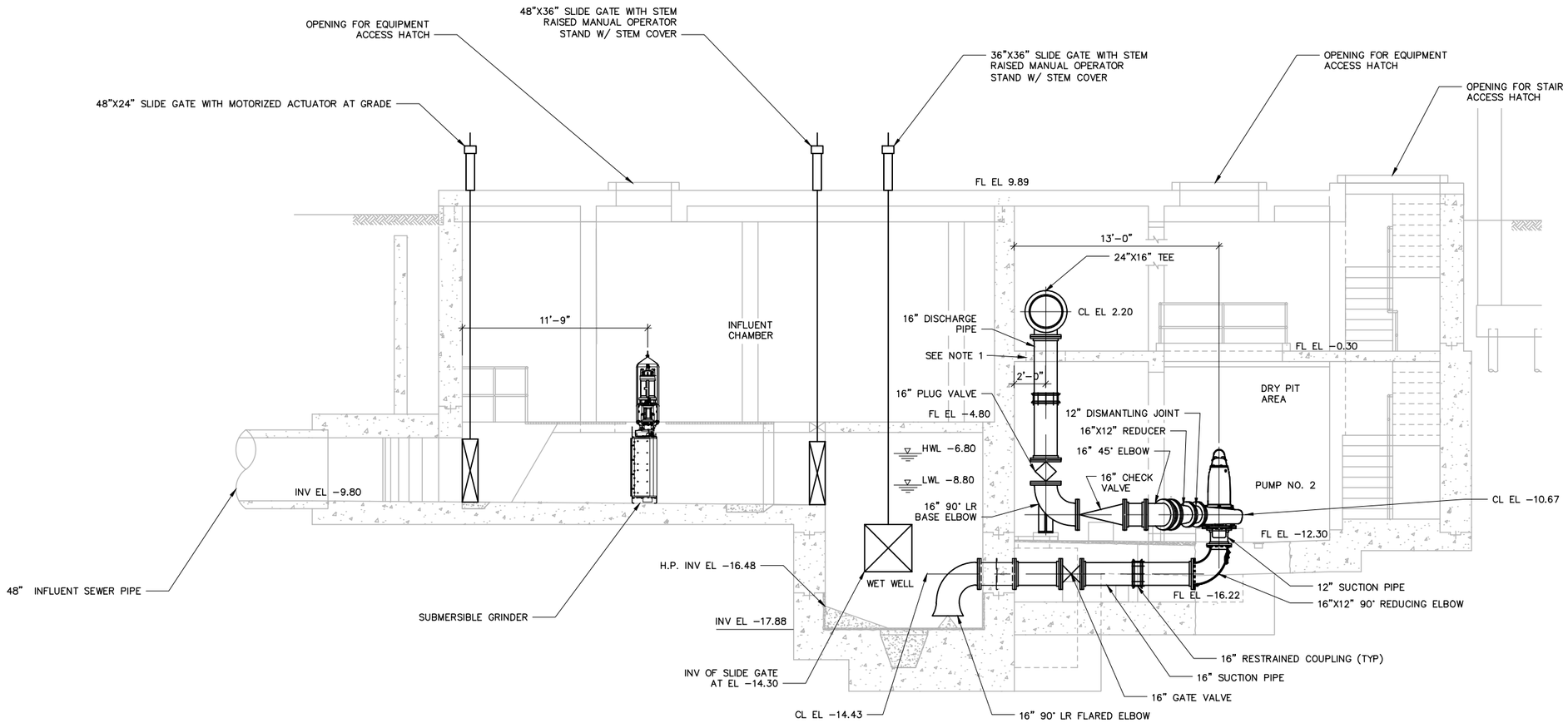

2 / M-02 SECTION

SCALE: 1/4" = 1'-0"

0 2' 4' 8'

Hazen ARCADIS A JOINT VENTURE

LEGAL ENTITY:
ARCADIS CE, INC.

SEALS

STATE OF NEW YORK · NANGSTON S. JOAFS · No. 093357 · LICENSED PROFESSIONAL ENGINEER

NASSAU COUNTY, NEW YORK

DEPARTMENT OF PUBLIC WORKS

LONG BEACH WPCP CONSOLIDATION PUMP STATION CONVERSION

LONG BEACH WASTEWATER POLLUTION CONTROL PLANT

NO.	DATE	ISSUED FOR	BY

COPYRIGHT: 2017 HAZEN AND SAWYER/ ARCADIS A JOINT VENTURE

DATE: JULY 2020
PROJECT NO.: 00726790.0001
FILE NAME: M-06
DESIGNED BY: L. JONES
DRAWN BY: J. MA
CHECKED BY: L. JONES

SHEET TITLE

MECHANICAL

PUMP STATION SECTION II

SCALE: 1/4" = 1'-0"

M-06

SHEET 73 OF 112

User:SWOHLFAHRT Spec:AUS-NCSMOD File:\\NY03FP01\DATA\WHL_CAD\VOL2\ACAD\PROJ\00726790.0001\SHEETS\M-06.DWG Scale:1:1 SavedDate:7/8/2020 Time:17:38 Plot Date: Wohlfahrt, Sarah; 7/20/2020; 14:36 ; Layout:LAYOUT1

NOTES:

1. CONTRACTOR SHALL RE-INSTALL EXISTING FLOWMETER AT LOCATION SHOWN.
2. PIPE SHALL BE ROUTED THROUGH OPENINGS IN SLAB. SEE SHEET S-03 FOR DETAILS.
3. FOR SUMP PUMP DETAILS, SEE SHEET P-02 AND P-03.

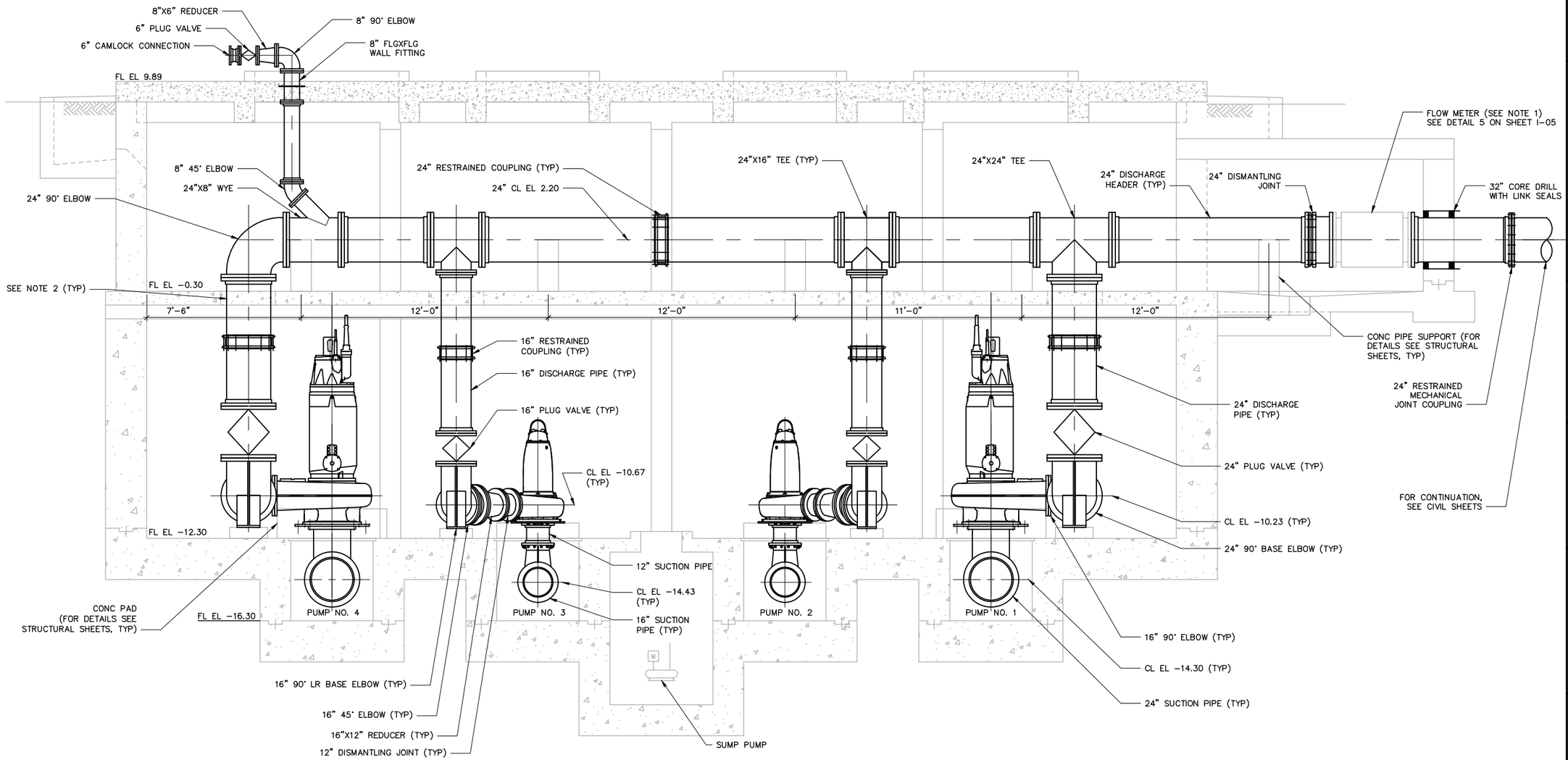

3 / M-03 SECTION

SCALE: 3/8" = 1'-0"

0 2' 4' 6'

Hazen ARCADIS A JOINT VENTURE

LEGAL ENTITY:
ARCADIS CE, INC.

SEALS

STATE OF NEW YORK · MANGESH S. JOAPS · No. 093357 · LICENSED PROFESSIONAL ENGINEER

NASSAU COUNTY, NEW YORK
DEPARTMENT OF PUBLIC WORKS

LONG BEACH WPCP CONSOLIDATION PUMP STATION CONVERSION

LONG BEACH WASTEWATER POLLUTION CONTROL PLANT

NO.	DATE	ISSUED FOR	BY

COPYRIGHT: 2017 HAZEN AND SAWYER/ ARCADIS A JOINT VENTURE

DATE:	JULY 2020
PROJECT NO.:	00726790.0001
FILE NAME:	M-07
DESIGNED BY:	L. JONES
DRAWN BY:	J. MA
CHECKED BY:	L. JONES

SHEET TITLE

MECHANICAL

PUMP STATION SECTION III

SCALE: 3/8" = 1'-0"

M-07

SHEET 74 OF 112

User: SWOHLFAHRT Spec: AUS-NCSMOD File: \\NY03FP01\DATA\WHI_CAD\VOL2\ACAD\PROJ\00726790.0001\SHEETS\M-07.DWG Scale: 1:1 SavedDate: 6/30/2020 Time: 13:59 Plot Date: Wohlfahrt, Sarah; 7/20/2020; 14:46 ; Layout: LAYOUT1

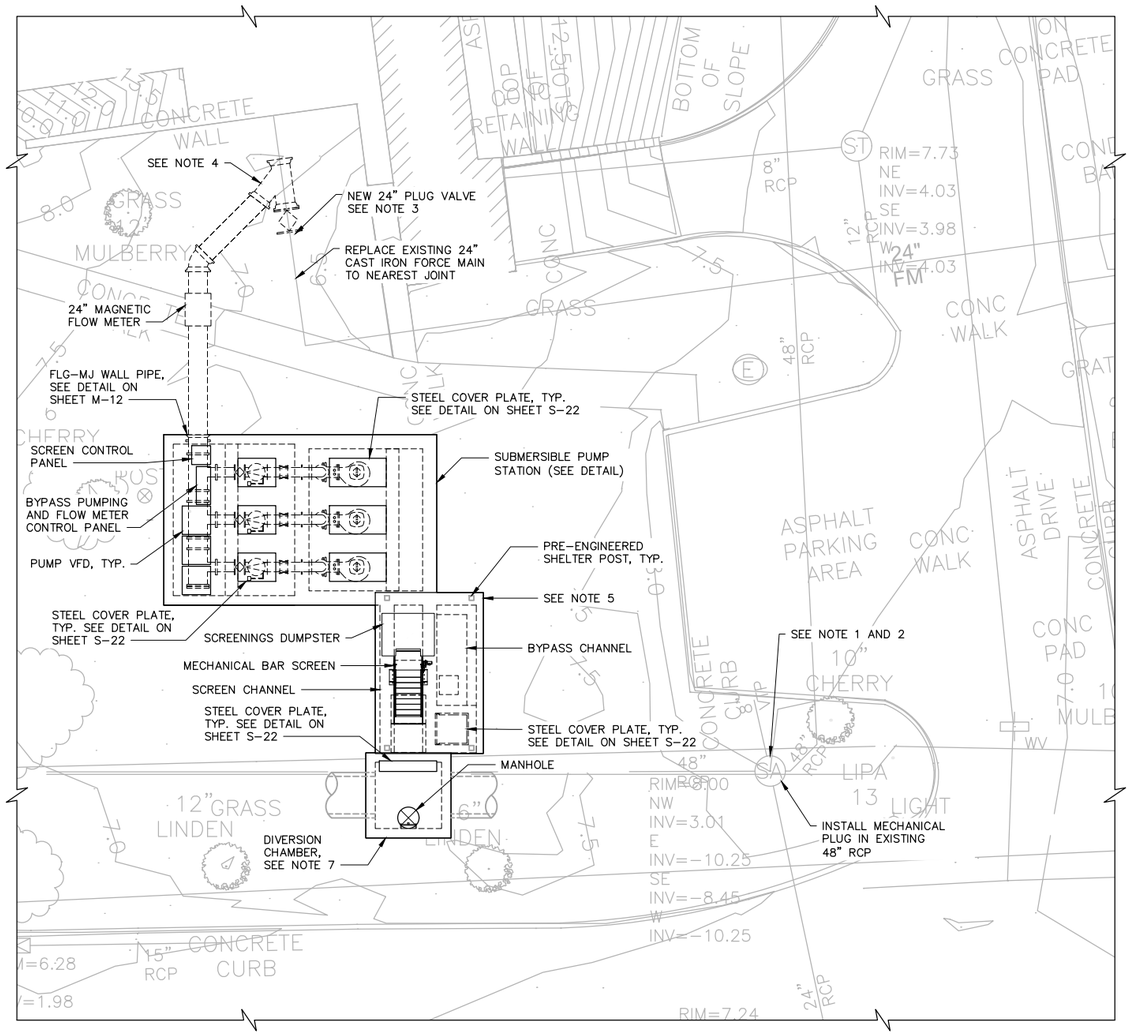

BYPASS PUMPING PARTIAL SITE PLAN

SCALE: 1/8" = 1'–0"

0 4' 8' 16'

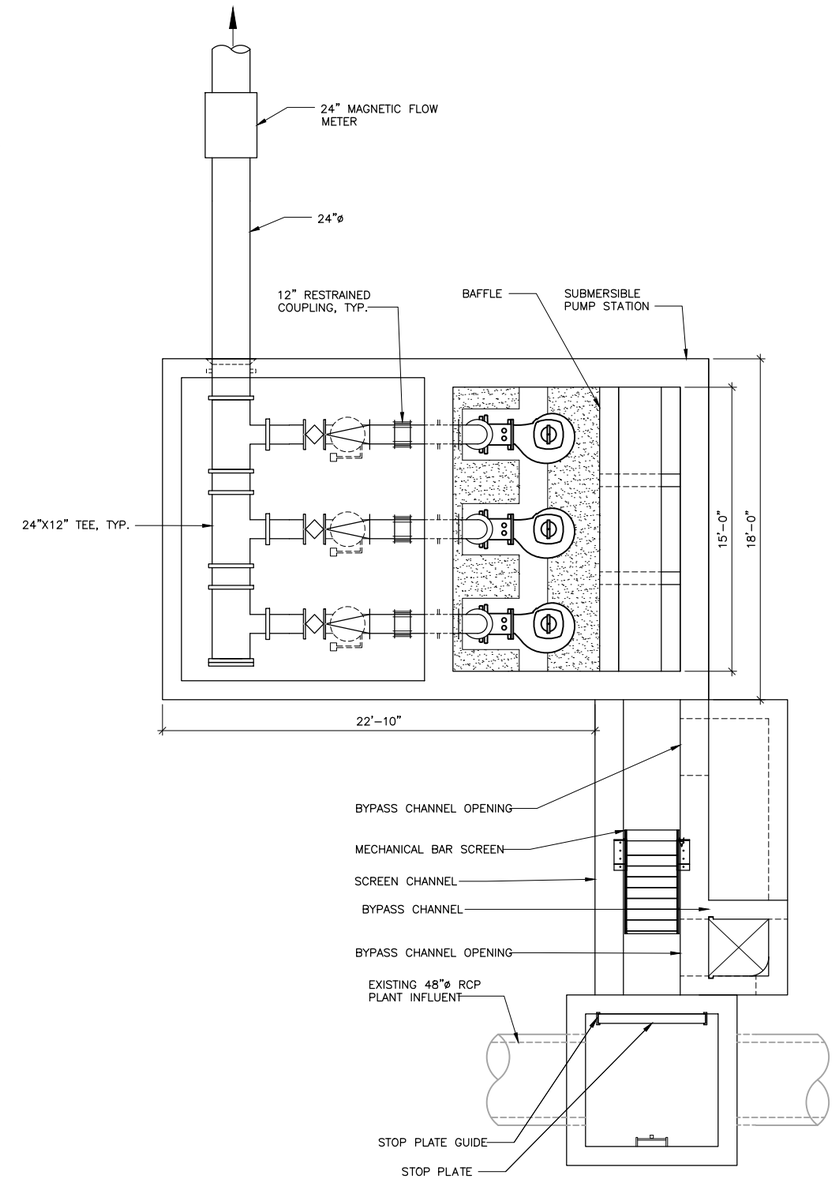

BYPASS PUMPING PLAN AT EL. 3.60

SCALE: 1/4" = 1'–0"

0 2' 4' 8'

NOTES:

1. CONTRACTOR SHALL DIVERT FLOW FROM PIPES DISCHARGING INTO 48" RCP DOWNSTREAM OF MECHANICAL PLUG TO THE TEMPORARY PUMPING STATION FOR THE DURATION OF CONSTRUCTION.
2. REMOVE/REBUILD TOP OF THE MANHOLE FOR INSTALLATION/REMOVAL OF THE MECHANICAL PLUG CONTRACTOR SHALL VERIFY ALL DIMENSIONS AND CONDITIONS FOR MECHANICAL PLUG FABRICATION AND INSTALLATION.
3. BURIED VALVE SHALL BE INSTALLED WITH EXTENSION SHAFT, OPERATING NUT AND VALVE BOX IN ACCORDANCE TO SPECIFICATION 15100.
4. COORDINATE SHORT TERM SHUTDOWNS OF THE MAIN PUMP STATION WITH THE PLANT PERSONNEL. CONTRACTOR SHALL PROVIDE ALL REQUIRED FITTINGS, ADAPTERS, AND OTHER APPURTENANCES TO PROVIDE DISCHARGE PIPE CONNECTION TO THE EXISTING FORCE MAIN.
5. LINE OF PRE–ENGINEERED SHELTER ROOF AS SPECIFIED IN SPECIFICATION 13123.
6. AREA WITHIN A 10' DISTANCE OF MECHANICAL BAR SCREEN AND DUMPSTER IS CLASSIFIED AS CLASS 1, DIVISION 2.
7. SEQUENCE OF CONSTRUCTION DETAILED IN SPECIFICATION 01705.

Hazen ARCADIS A JOINT VENTURE

LEGAL ENTITY:
ARCADIS CE, INC.

SEALS

NASSAU COUNTY, NEW YORK
DEPARTMENT OF PUBLIC WORKS

LONG BEACH WPCP CONSOLIDATION PUMP STATION CONVERSION

LONG BEACH WASTEWATER POLLUTION CONTROL PLANT

NO.	DATE	ISSUED FOR	BY

COPYRIGHT: 2017 HAZEN AND SAWYER/ ARCADIS A JOINT VENTURE

DATE:	JULY 2020
PROJECT NO.:	00726790.0001
FILE NAME:	LBPS–TLBK–BYPASS
DESIGNED BY:	V. LEVIN / L. GE
DRAWN BY:	T. ORDONEZ
CHECKED BY:	E. MILLS

SHEET TITLE

MECHANICAL

BYPASS PUMPING SITE PLAN

AS SHOWN

M–08

SHEET 75 OF 112

User:TORDONEZ Spec:AUS–NCSMOD File:G:\90500–000–NYC\DRAWINGS\LONG BEACH CONVERSION\BYPASS_PUMPING_C.DWG Scale:1:1 SavedDate:7/21/2020 Time:09:49 Plot Date: Ordonez, Tallo; 7/21/2020; 09:51 ; Layout:M–08

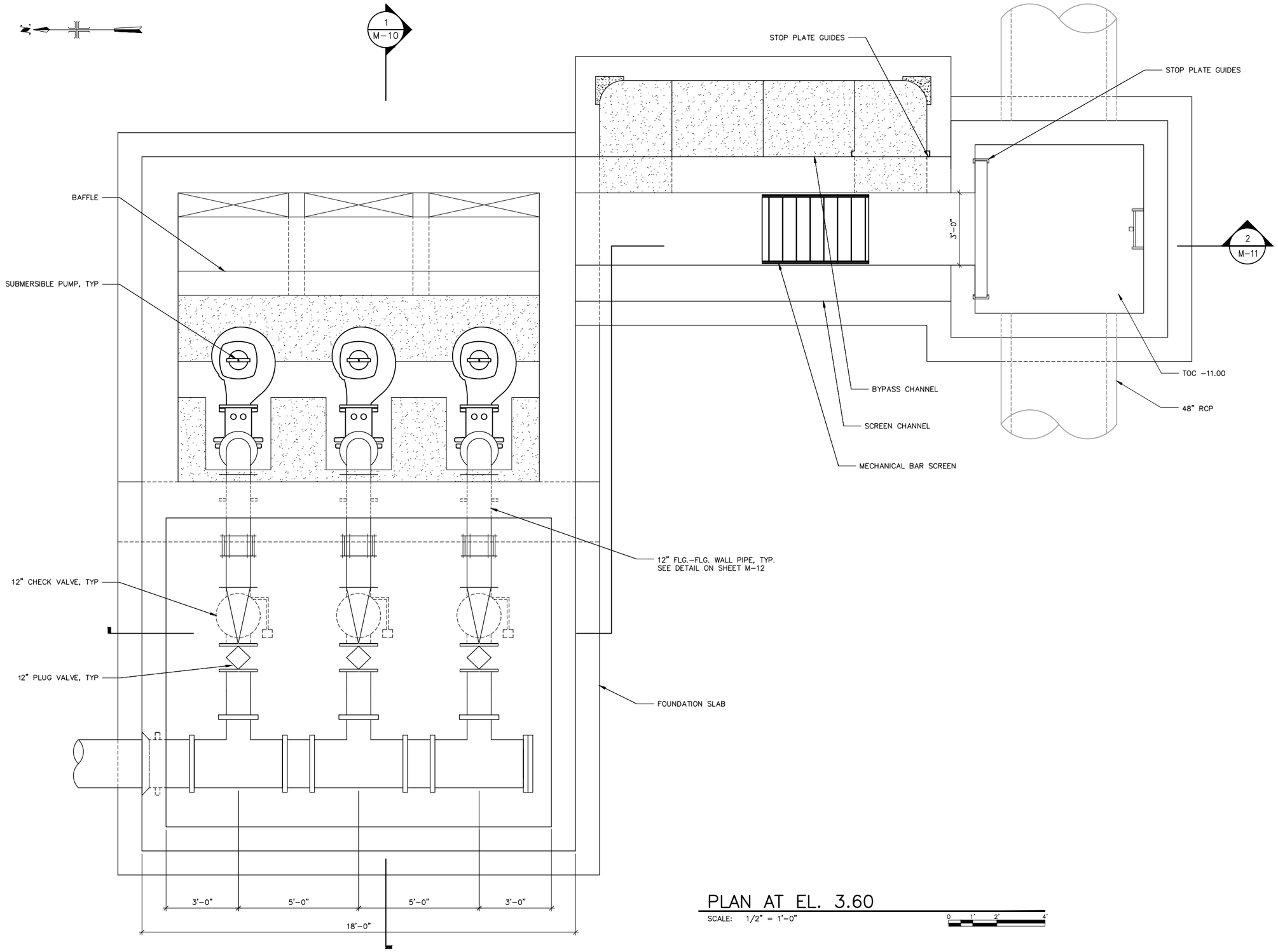

PLAN AT EL. 3.60

SCALE: 1/2" = 1'-0"

0 1' 2' 4'

Hazen ARCADIS
A JOINT VENTURE

LEGAL ENTITY:
ARCADIS CE, INC.

SEALS

NASSAU COUNTY, NEW YORK
DEPARTMENT OF PUBLIC WORKS

LONG BEACH WPCP CONSOLIDATION PUMP STATION CONVERSION

LONG BEACH WASTEWATER POLLUTION CONTROL PLANT

NO.	DATE	ISSUED FOR	BY

COPYRIGHT: 2017 HAZEN AND SAWYER/ ARCADIS A JOINT VENTURE

DATE: JULY 2020
PROJECT NO.: 00726790.0001
FILE NAME: LBPS-TLBK-BYPASS
DESIGNED BY: V. LEVIN / L. GE
DRAWN BY: T. ORDONEZ
CHECKED BY: E. MILLS

SHEET TITLE

MECHANICAL

BYPASS PUMPING PLAN

1/2" = 1'-0"

M-09

SHEET 76 OF 112

User:TORDONEZ Spec:AUS-NCSMOD File:O:\90500-000-NYC\DRAWINGS\LONG BEACH CONVERSION\BYPASS_PUMPING_C.DWG Scale:1:1 SavedDate:7/17/2020 Time:08:59 Plot Date: Ordonez, Tallo; 7/17/2020; 15:39 ; Layout:M-09

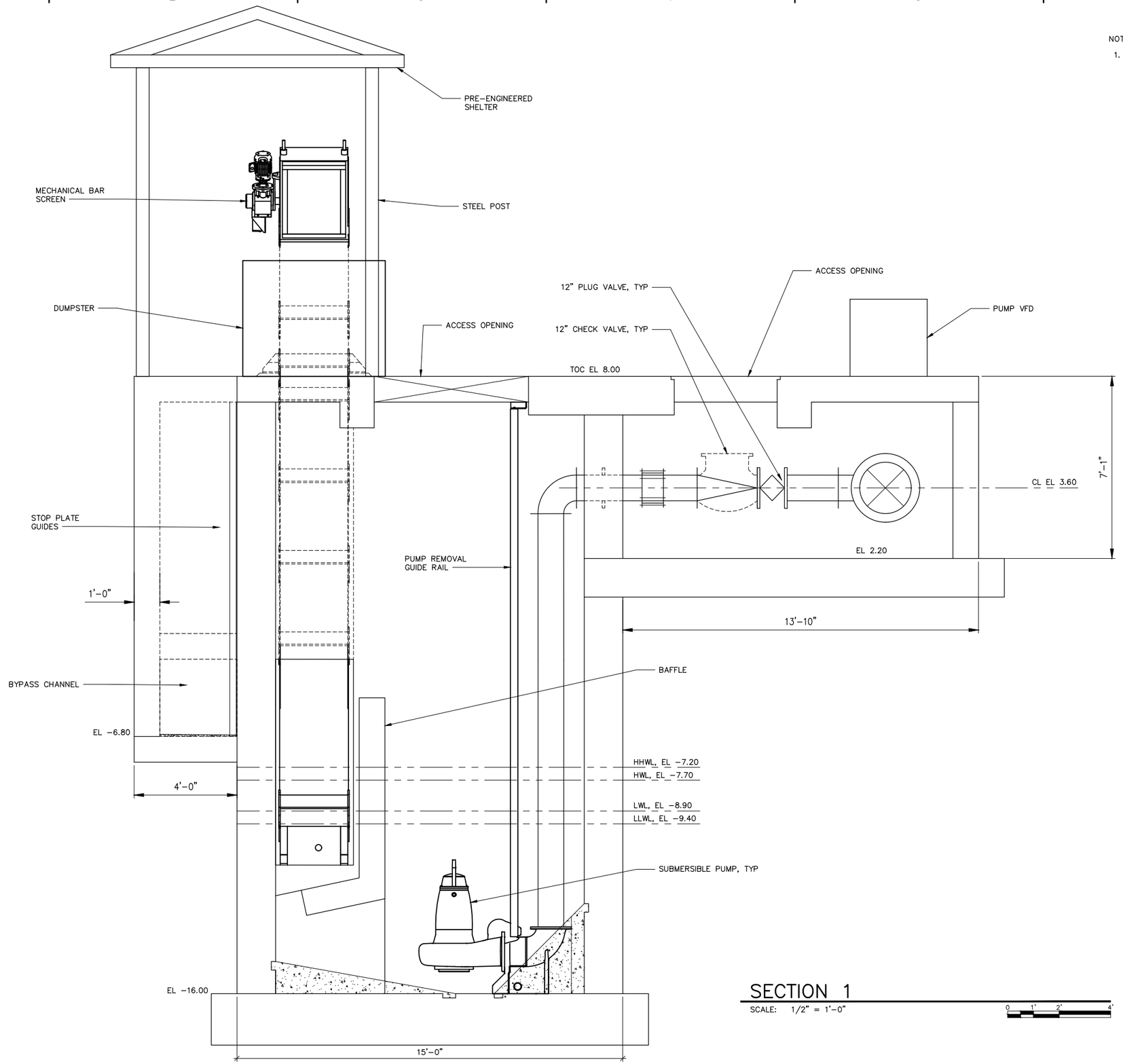

NOTE:

1. PROVIDE A VALVE VAULT DRAIN INTO THE WET WELL. THE DRAIN SHALL HAVE A MUD VALVE, NORMALLY CLOSED, WITH EXTENSION STEM AND SQUARE NUT OPERABLE FROM GRADE.

SECTION 1

SCALE: 1/2" = 1'-0"

0 1' 2' 4'

Hazen ARCADIS
A JOINT VENTURE

LEGAL ENTITY:
ARCADIS CE, INC.

SEALS

STATE OF NEW YORK · PAUL DANIEL SAUNDERS · LICENSED PROFESSIONAL ENGINEER

NASSAU COUNTY, NEW YORK
DEPARTMENT OF PUBLIC WORKS

LONG BEACH WPCP CONSOLIDATION
PUMP STATION CONVERSION

LONG BEACH WASTEWATER POLLUTION CONTROL PLANT

NO.	DATE	ISSUED FOR	BY

COPYRIGHT: 2017 HAZEN AND SAWYER/ ARCADIS A JOINT VENTURE

DATE: JULY 2020
PROJECT NO.: 00726790.0001
FILE NAME: LBPS-TLBK-BYPASS
DESIGNED BY: V. LEVIN / L. GE
DRAWN BY: T. ORDONEZ
CHECKED BY: E. MILLS

SHEET TITLE

MECHANICAL

BYPASS PUMPING SECTION I

1/2" = 1'-0"

M-10

SHEET 77 OF 112

User:TORDONEZ Spec: AIS-NCSMOD File:O:\90500-000-NYC\DRAWINGS\LONG BEACH CONVERSION\BYPASS_PUMPING_C.DWG Scale:1:1 SavedDate:7/17/2020 Time:08:59 Plot Date: Ordonez, Tallo; 7/17/2020; 15:39 ; Layout:M-10

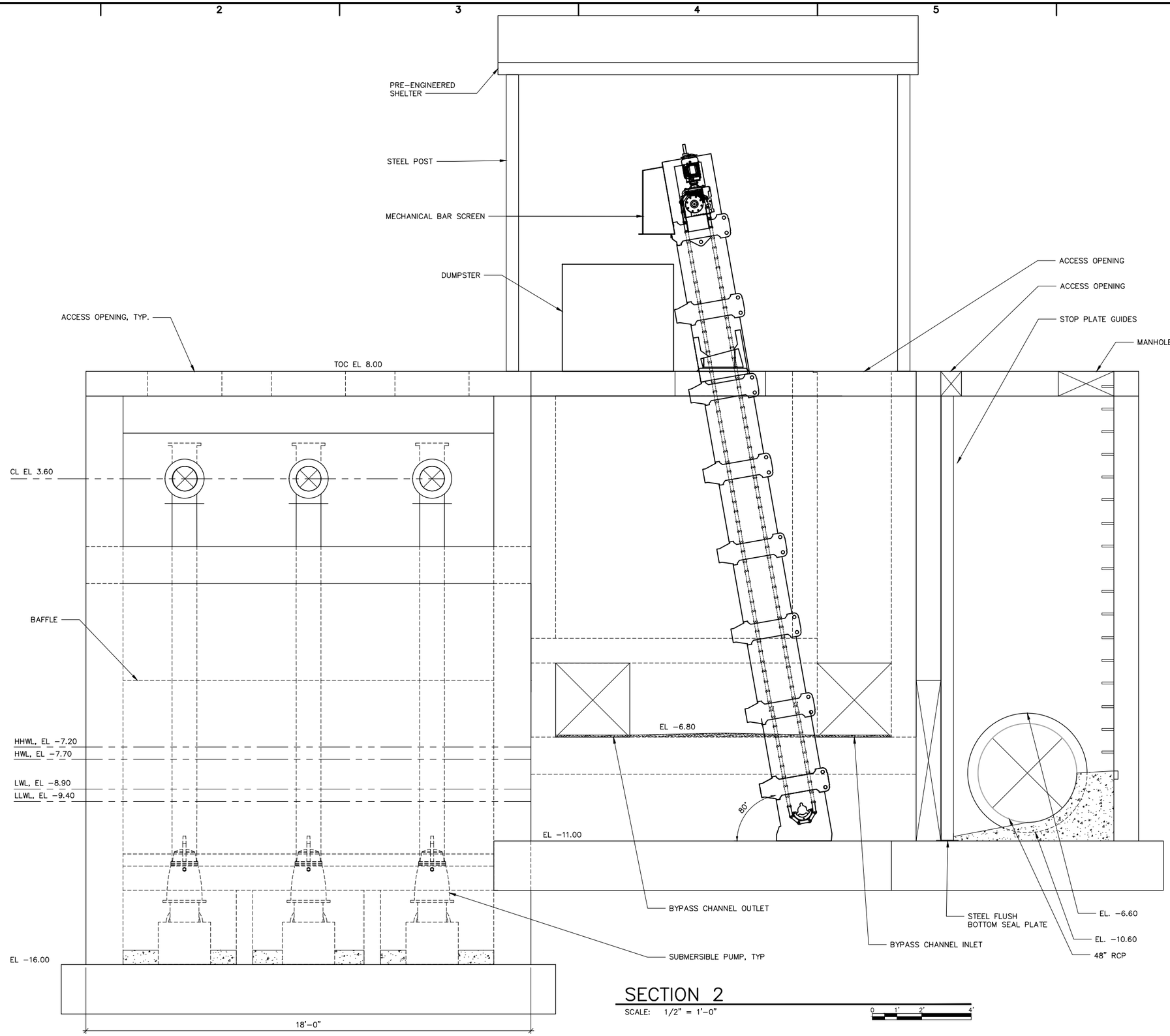

SECTION 2

SCALE: 1/2" = 1'-0"

0 1' 2' 4'

Hazen ARCADIS
A JOINT VENTURE

LEGAL ENTITY:
ARCADIS CE, INC.

SEALS

NASSAU COUNTY, NEW YORK
DEPARTMENT OF PUBLIC WORKS

LONG BEACH WPCP CONSOLIDATION
PUMP STATION CONVERSION

LONG BEACH WASTEWATER POLLUTION CONTROL PLANT

NO.	DATE	ISSUED FOR	BY

COPYRIGHT: 2017 HAZEN AND SAWYER/ ARCADIS A JOINT VENTURE

DATE: JULY 2020
PROJECT NO.: 00726790.0001
FILE NAME: LBPS-TLBK-BYPASS
DESIGNED BY: V. LEVIN / L. GE
DRAWN BY: T. ORDONEZ
CHECKED BY: E. MILLS

SHEET TITLE

MECHANICAL

BYPASS PUMPING SECTION II

1/2" = 1'-0"

M-11

SHEET 78 OF 112

User:TORDONEZ Spec: AUS-NCSMOD File:O:\80500-000-NYC\DRAWINGS\LONG BEACH CONVERSION\BYPASS_PUMPING_C.DWG Scale:1:1 SavedDate:7/17/2020 Time:08:59 Plot Date: Ordonez, Tallo; 7/17/2020; 15:39 ; Layout:M-11

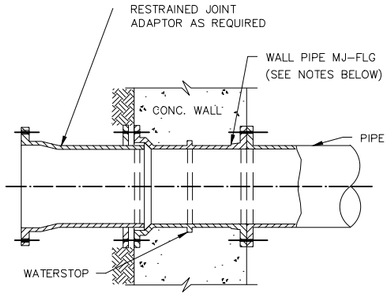

TYPICAL WALL FITTING DETAIL

SCALE: NOT TO SCALE

NOTES:

1. WALL PIPE CAN BE MJ–FLG (SHOWN ABOVE), FLG–FLG, MJ–PE AND FLG–PE.
2. WALL PIPE IS TO BE SET FLUSH WITH WALL UNLESS OTHERWISE NOTED.
3. FLANGES & MJ SHOULD BE DRILLED AND TAPPED FOR STUDS.

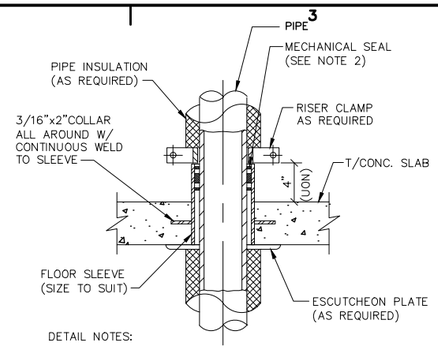

DETAIL NOTES:

1. TYPE 1 – MECHANICAL SEAL REQUIRED
   TYPE 2 – MECHANICAL SEAL NOT REQUIRED
2. PROVIDE FIRE RATED MECHANICAL SEALS AS REQUIRED.

TYPICAL FLOOR SLEEVE DETAIL

SCALE: NOT TO SCALE

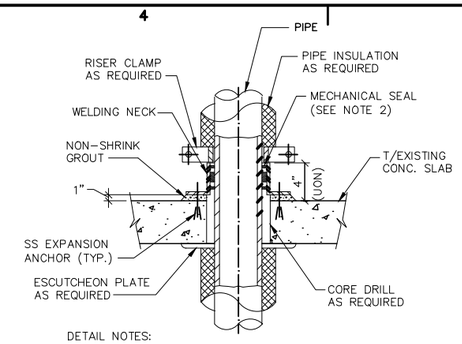

DETAIL NOTES:

1. TYPE 1 – MECHANICAL SEAL REQUIRED
   TYPE 2 – MECHANICAL SEAL NOT REQUIRED
2. PROVIDE FIRE RATED MECHANICAL SEALS AS REQUIRED.

TYPICAL FLOOR CORE DETAIL

SCALE: NOT TO SCALE

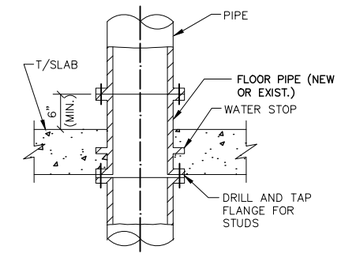

TYPICAL FLOOR PIPE DETAIL

SCALE: NOT TO SCALE

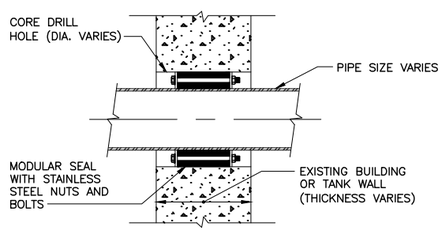

NOTES:

1. MODULAR SEAL STRIP SHALL BE PLACED SO THAT BOLTS CAN BE ADJUSTED DURING NORMAL OPERATION.
2. WALLS 12" OR THICKER SHALL REQUIRE 2 MODULAR SEAL STRIPS.

(USE FOR ALL EXISTING WALL PENETRATIONS EXCEPT WHERE OTHERWISE NOTED)

TYPICAL PIPE PENETRATION THRU EXISTING WALL

SCALE: NOT TO SCALE

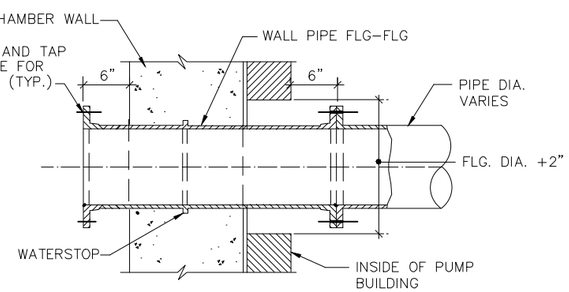

TYPICAL FLG.–FLG. WALL PIPE

SCALE: NOT TO SCALE

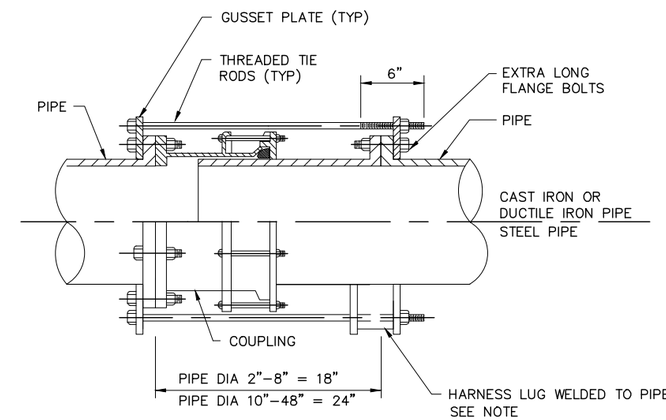

NOTE: THE NUMBER OF TIE RODS, HARNESS LUGS CONFIGURATION AND MATERIAL THICKNESS SHALL BE IN ACCORDANCE WITH AWWA M–11, STEEL PIPE – A GUIDE FOR DESIGN AND INSTALLATION.

HARNESSED FLANGED COUPLING ADAPTER DETAIL

SCALE: NOT TO SCALE

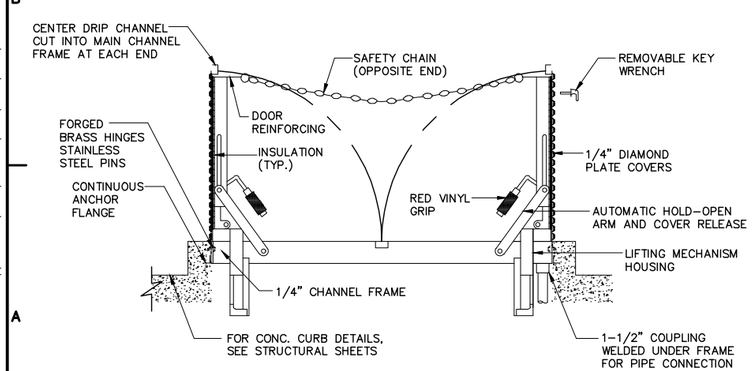

ALUMINUM ACCESS HATCH DETAIL

SCALE: NOT TO SCALE

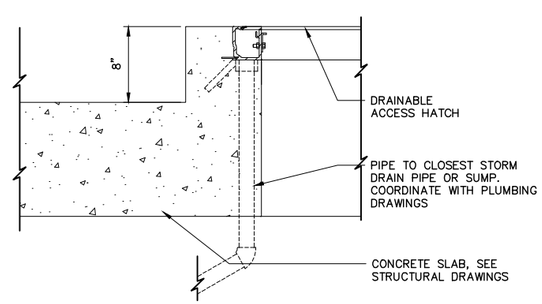

TYP. EXTERIOR HATCH DETAIL

SCALE: 1 1/2" = 1'–0"

HATCH SCHEDULE

EQUIPMENT HATCH ID	BUILDING	FLOOR ELEVATION	CLEAR OPENING WIDTH	CLEAR OPENING LENGTH	MATERIAL	WITH RAILINGS OR CHAIN	STYLE	UL RATED	REMARKS
EQH–1,2,3	INFLUENT CHAMBER	9.89	3'–6"	3'–6"	AL	(C)	D	–	GRINDER EQUIPMENT REMOVAL AND PERSONNEL ACCESS
EQH–4,7	PUMP STATION	9.89	7'–0"	7'–0"	AL	(C)	B	–	PUMP EQUIPMENT REMOVAL
EQH–5,6	PUMP STATION	9.89	5'–0"	5'–0"	AL	(C)	B	–	PUMP EQUIPMENT REMOVAL
EQH–8	PUMP STATION	9.89	6'–0"	12'–0"	AL	(C)	B	–	STAIR ACCESS

CHAIN W/ POST (C) OR RAILINGS (R) SYSTEM:
CHAIN W/ POST OR RAILING SYSTEM TO BE STORED WITHIN OPENING.

STYLE:
A – INTERIOR DOUBLE LEAF 300PSF LOADING.
B – EXTERIOR DOUBLE LEAF 300PSF LOADING, DRAINAGE, KEY LOCK TO MATCH KEYING SYSTEM.
C – INTERIOR SINGLE LEAF 300PSF LOADING.
D – EXTERIOR SINGLE LEAF 300PSF LOADING, DRAINAGE, KEY LOCK TO MATCH KEYING SYSTEM.
E – INTERIOR SINGLE LEAF OPEN GRATING 300 PSF LOADING.
F – EXTERIOR SINGLE LEAF H–20 LOADING, DRAINAGE, KEY LOCK TO MATCH KEYING SYSTEM.

Hazen ARCADIS
A JOINT VENTURE

LEGAL ENTITY:
ARCADIS CE, INC.

SEALS

STATE OF NEW YORK · KINGSTON S. JOAFS · No. 093357 · LICENSED PROFESSIONAL ENGINEER

NASSAU COUNTY, NEW YORK
DEPARTMENT OF PUBLIC WORKS

LONG BEACH WPCP CONSOLIDATION PUMP STATION CONVERSION

LONG BEACH WASTEWATER POLLUTION CONTROL PLANT

NO.	DATE	ISSUED FOR	BY

COPYRIGHT: 2017 HAZEN AND SAWYER/ ARCADIS A JOINT VENTURE

DATE: JULY 2020
PROJECT NO.: 00726790.0001
FILE NAME: M–12
DESIGNED BY: L. JONES
DRAWN BY: J. MA
CHECKED BY: L. JONES

SHEET TITLE

MECHANICAL

MISCELLANEOUS DETAILS – SHEET 1

SCALE: AS SHOWN

M–12

SHEET 79 OF 112

User:SWOHLFAHRT Spec:AUS-NCSMOD File:\\NY03FP01\DATA\WHL_CAD\V0L2\ACAD\PROJ\00726790.0001\SHEETS\M-12.DWG Scale:1:1 SavedDate:6/30/2020 Time:13:50 Plot Date: Wohlfahrt, Sarah; 7/20/2020; 14:49 ; Layout:LAYOUT1

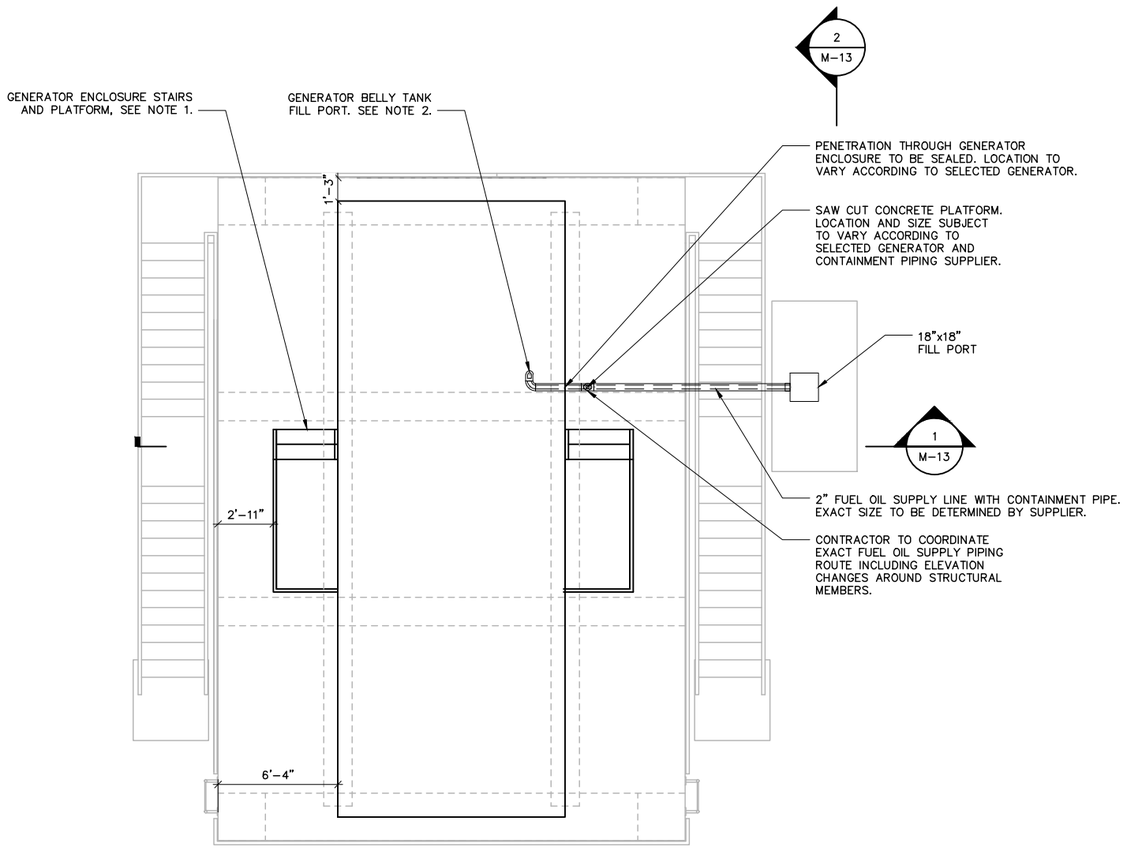

GENERATOR PLATFORM PLAN AT EL 21.40

SCALE: 1/4" = 1'-0"

0 2' 4' 8'

DIESEL FUEL FILL PORT AND PIPING NOTES:

1. PLATFORM AND STAIRS ARE PROVIDED BY GENERATOR SUPPLIER. THE LOCATION OF THE PLATFORM SHALL BE COORDINATED WITH THE GENERATOR SUPPLIER.
2. COORDINATE THE ACTUAL LOCATION OF THE FUEL TANK FILL PORT WITH THE FURNISHED EQUIPMENT.

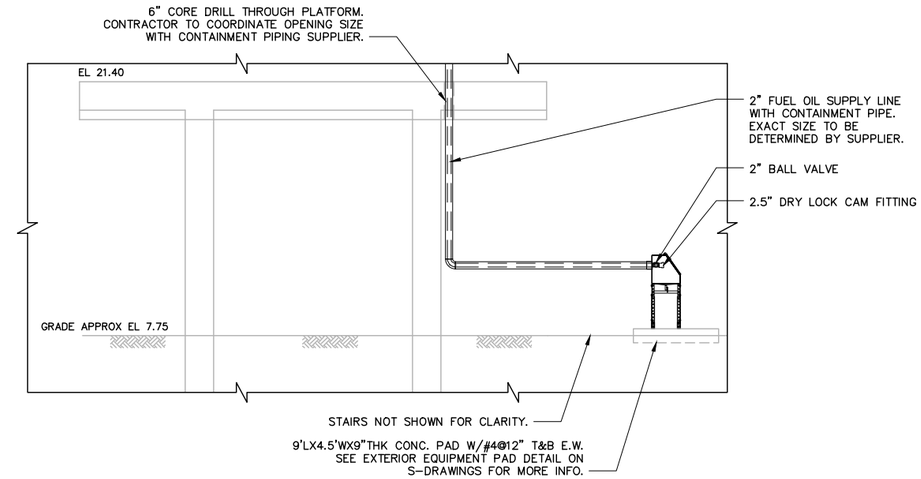

1 M-13 DIESEL FUEL FILL PORT DETAIL

SCALE: 1/4" = 1'-0"

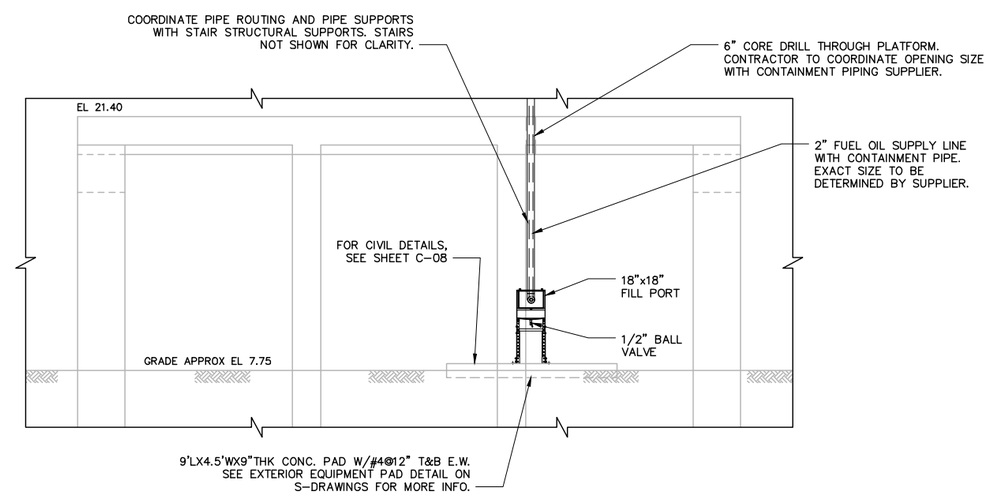

2 M-13 DIESEL FUEL PIPING DETAIL

SCALE: 1/4" = 1'-0"

Hazen ARCADIS
A JOINT VENTURE

LEGAL ENTITY:
ARCADIS CE, INC.

SEALS

STATE OF NEW YORK
LANGSTON S. JONES
No. 093357
LICENSED PROFESSIONAL ENGINEER
7/20

NASSAU COUNTY, NEW YORK
DEPARTMENT OF PUBLIC WORKS

LONG BEACH WPCP CONSOLIDATION
PUMP STATION CONVERSION

LONG BEACH WASTEWATER POLLUTION CONTROL PLANT

NO.	DATE	ISSUED FOR	BY

COPYRIGHT: 2017 HAZEN AND SAWYER/ ARCADIS A JOINT VENTURE

DATE: JULY 2020
PROJECT NO.: 00726790.0001
FILE NAME: M-13
DESIGNED BY: L. JONES
DRAWN BY: J. MA
CHECKED BY: L. JONES

SHEET TITLE

MECHANICAL

MISCELLANEOUS DETAILS – SHEET 2

SCALE: 1/4" = 1'-0"

M-13

SHEET 80 OF 112

User:SWOHLFAHRT Spec:AUS-NCSMOD File:\\NY03FP01\DATA\WH_CAD\VOL2\ACAD\PROJ\00726790.0001\SHEETS\M-13.DWG Scale:1:1 SavedDate:7/16/2020 Time:14:57 Plot Date: Wohlfahrt, Sarah; 7/20/2020; 14:53 ; Layout:LAYOUT1

SLIDE GATE NOTES:

1. GATE DETAILS SHOWN VARY BY MANUFACTURER. CONTRACTOR TO COORDINATE GATE DETAILS OF CONSTRUCTION, INCLUDING MOUNTING ARRANGEMENTS, SIZES, AND DIMENSIONS WITH EQUIPMENT FURNISHED.
2. CONTRACTOR TO COORDINATE HAND CRANK OPERATOR ORIENTATION SO AS TO AVOID INTERFERENCES WITH ADJACENT STRUCTURES AND EQUIPMENT. SEE PLANS FOR GATE LOCATIONS.
3. PROVIDE STOP BARS AND STEM GUIDES ON OPERATING STEM AS REQUIRED.
4. SEE SPEC FOR SIZES OF OPENINGS AND REQUIRED GATE TRAVEL HEIGHT.
5. FACE MOUNTED SLIDE GATES SHOWN ABOVE. COORDINATE DETAILS WITH EQUIPMENT FURNISHED.
6. * – DENOTES DIMENSION TO BE COORDINATED WITH EQUIPMENT FURNISHED. SEE NOTE 1.

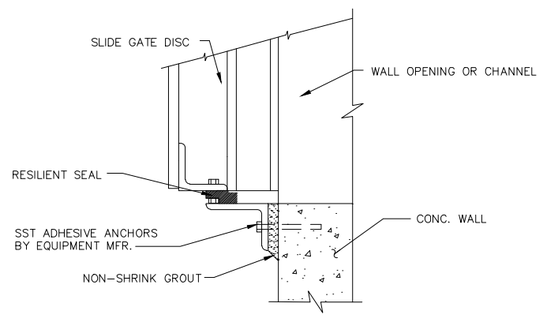

FACE MOUNTED INVERT CLOSURE DETAIL
SCALE: NOT TO SCALE

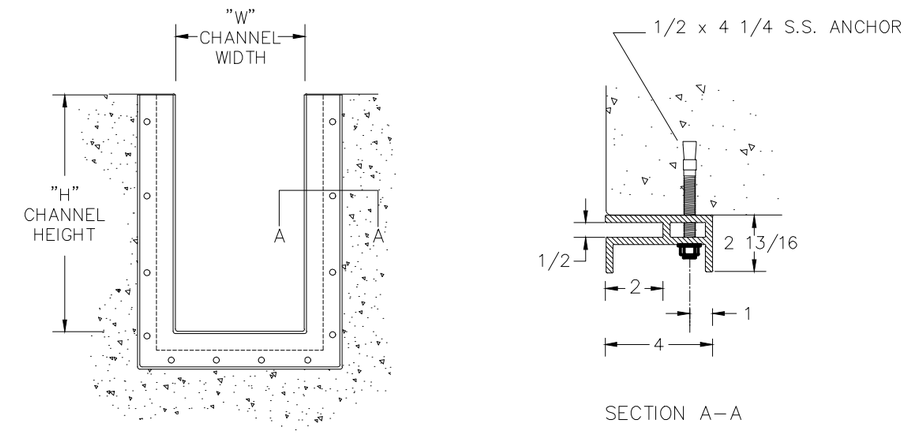

SECTION A–A

TYPICAL FACE MOUNTED SLIDE PLATE FRAME DETAIL
SCALE: NOT TO SCALE

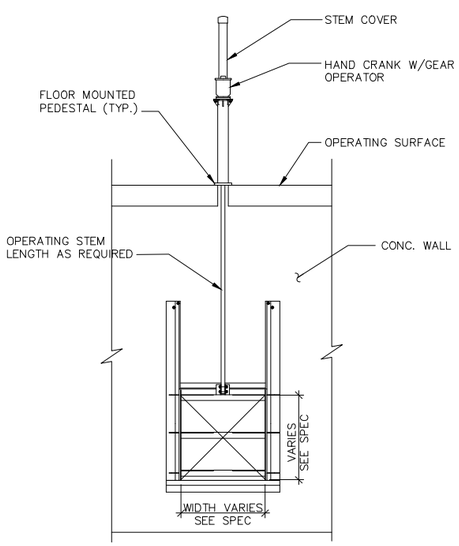

NON–SELF CONTAINED PEDESTAL MOUNTED SLIDE GATE TYPICAL DETAIL
SCALE: NOT TO SCALE

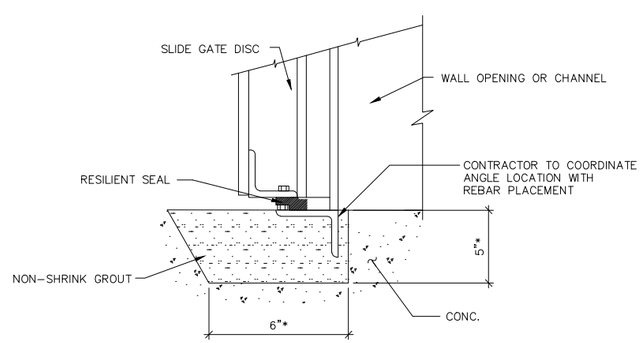

FLUSH BOTTOM CLOSURE DETAIL
SCALE: NOT TO SCALE

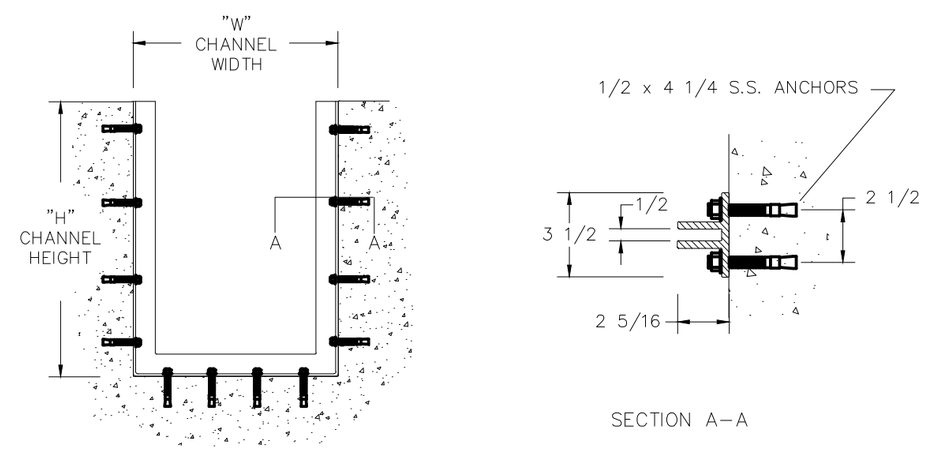

SECTION A–A

TYPICAL IN CHANNEL MOUNTED SLIDE PLATE FRAME DETAIL
SCALE: NOT TO SCALE

Hazen ARCADIS
A JOINT VENTURE

LEGAL ENTITY:
ARCADIS CE, INC.

SEALS

NASSAU COUNTY, NEW YORK
DEPARTMENT OF PUBLIC WORKS

LONG BEACH WPCP CONSOLIDATION
PUMP STATION CONVERSION

LONG BEACH WASTEWATER POLLUTION CONTROL PLANT

NO.	DATE	ISSUED FOR	BY

COPYRIGHT: 2017 HAZEN AND SAWYER/ ARCADIS A JOINT VENTURE

DATE: JULY 2020
PROJECT NO.: 00726790.0001
FILE NAME: M–14
DESIGNED BY: L. JONES
DRAWN BY: J. MA
CHECKED BY: L. JONES

SHEET TITLE
MECHANICAL

MISCELLANEOUS DETAILS – SHEET 3

SCALE: NOT TO SCALE

M–14
SHEET 81 OF 112

User:SWOHLFAHRT Spec:AUS-NCSMOD File:\\NY03FP01\DATA\WH_CAD\VOL2\ACAD\PROJ\00726790.0001\SHEETS\M-14.DWG Scale:1:1 SavedDate:6/30/2020 Time:14:30 Plot Date: Wohlfahrt, Sarah; 7/20/2020; 16:18 ; Layout:LAYOUT1

ABBREVIATIONS

HVAC

ACH	AIR CHANGES PER HOUR
AD	ACCESS DOOR
AFF	ABOVE FINISHED FLOOR
AFR	ABOVE FINISHED ROOF
AL	ALUMINUM
AMB	AMBIENT
APPROX	APPROXIMATE
ATC	AUTOMATIC TEMPERATURE CONTROL
AUTO	AUTOMATIC
BBO	BATTERY BACK UP OPEN
BDD	BACKDRAFT DAMPER
BHP	BRAKE HORSE POWER
BLDG	BUILDING
BOD	BOTTOM OF DUCT
BOG	BOTTOM OF GRILLE
BOT EL	BOTTOM ELEVATION
BOU	BOTTOM OF UNIT
BTU/HR	BRITISH THERMAL UNITS PER HOUR
BTUH	BRITISH THERMAL UNITS PER HOUR
℄	CENTER LINE
CD	CEILING DIFFUSER
CFM	CUBIC FEET OF AIR PER MINUTE
CGD	COMBUSTION GAS DETECTOR
CONC	CONCRETE
COND	CONDENSATE
CONN	CONNECTION
CONT	CONTINUATION
DIA	DIAMETER
DN	DOWN
DWG	DRAWING
DX	DIRECT EXPANSION
EA	EACH
EAT	ENTERING AIR TEMPERATURE
ECAV	EXHAUST CONSTANT AIR VOLUME
EG	EXHAUST GRILLE
EL	ELEVATION
ER	EXHAUST REGISTER
ESP	EXTERNAL STATIC PRESSURE
EQUIP	EQUIPMENT
EWT	ENTERING WATER TEMPERATURE
EVAV	EXHAUST VARIABLE AIR VOLUME
EXH	EXHAUST
EXIST	EXISTING
F&B	FACE & BYPASS
FD	FIRE DAMPER
FLR	FLOOR
FO	FUEL OIL
FOR	FUEL OIL RETURN
FOS	FUEL OIL SUPPLY
FOPR	FUEL OIL PRESSURE RELIEF
FPM	FEET PER MINUTE
FT	FEET
GAL	GALVANIZED
GBD	GRAVITY BACKDRAFT DAMPER
GPM	GALLONS PER MINUTE
HHWR	HEATING HOT WATER RETURN
HHWS	HEATING HOT WATER SUPPLY
HP	HORSEPOWER
HVAC	HEATING, VENTILATION & AIR CONDITIONING
KW	KILOWATT
L	LOUVER
LAT	LEAVING AIR TEMPERATURE
LBG	LINEAR BAR GRILLE
LCD	LIQUID CRYSTAL DISPLAY
LWT	LEAVING WATER TEMPERATURE
MAX	MAXIMUM
MBH	THOUSAND BTUH
MCA	MINIMUM CIRCUIT AMPACITY
MD	MOTORIZED DAMPER
MERV	MINIMUM EFFICIENCY REPORTING VALUE
MECH	MECHANICAL
MIN	MINIMUM
MFR	MANUFACTURER
MOP	MAX OVERCURRENT PROTECTION
MTD	MOUNTED
NA	NOT APPLICABLE
NK	NECK
NO	NORMALLY OPEN
NC	NORMALLY CLOSED
NFA	NET FREE AREA
NTS	NOT TO SCALE
OA	OUTSIDE AIR
OAI	OUTSIDE AIR INTAKE
OPNG	OPENING
PD	PRESSURE DROP
PE	PNEUMATIC/ELECTRIC
PVC	POLYVINYL CHLORIDE
RECIP	RECIPROCATING
RG	RETURN GRILLE
RL	REFRIGERANT LIQUID
RM	ROOM
RR	RETURN REGISTER
RO	ROOF OPENING
RS	REFRIGERANT SUCTION
RV	RELIEF VENT
SC	SPRING CLOSE
SCAV	SUPPLY CONSTANT AIR VOLUME
SCH	SCHEDULE
SCR	SILICON CONTROLLED RECTIFIER
SD	SMOKE DETECTOR
SG	SUPPLY GRILLE
SMD	SMOKE DAMPER
SO	SPRING OPEN
SP	STATIC PRESSURE
SRV	SAFETY RELIEF VALVE
SR	SUPPLY REGISTER
SS	STAINLESS STEEL
SVAV	SUPPLY VARIABLE AIR VOLUME
TOD	TOP OF DUCT
TS	TOTAL STATIC
TSP	TOTAL STATIC PRESSURE
TVS	TEMPORARY VENTILATION STATION
TYP	TYPICAL
VAS	VENTILATION ALARM STATION
VD	MANUAL VOLUME DAMPER
VH	VALVE HEATING
VMS	VENTILATION MONITORING STATION
WB	WET BULB
WG	WATER GAUGE
WPD	WATER PRESSURE DROP
W/	WITH

EQUIPMENT

AC	AIR CONDITIONING UNIT
ACC	AIR COOLED CONDENSER
ACCU	AIR COOLED CONDENSING UNIT
AHU	AIR HANDLING UNIT
CH	CHILLER
CRAC	COMPUTER ROOM AIR CONDITIONER
CWH	CABINET WALL HEATER
DAC	DOOR AIR CURTAIN
DDC	DIRECT DIGITAL CONTROL
DH	DEHUMIDIFICATION UNIT
EBH	ELECTRIC BASEBOARD HEATER
EF	EXHAUST FAN
EUH	ELECTRIC UNIT HEATER
FACP	FIRE ALARM CONTROL PANEL
FBP	FIBER BRANCH PANEL
FPP	FIBER PATCH PANEL
GDC	GLYCOL DRY COOLER
HUH	HOT WATER UNIT HEATER
HV	HEATING AND VENTILATING UNIT
HVAC	HEATING, VENTILATING, AIR CONDITIONING UNIT
HWB	HOT WATER BOILER
HWP	HOT WATER PUMP
HWPP	HOT WATER PRIMARY PUMP
HWSP	HOT WATER SECONDARY PUMP
MAU	MAKE-UP AIR UNIT
PSP	PURGE STATION PANEL
PTAC	PACKAGED TERMINAL AC UNIT
RHP	RADIANT HEATING PANEL
SF	SUPPLY FAN
SPP	SMOKE PURGE PANEL

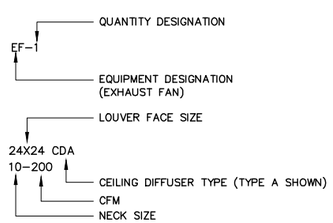

PIPING SYMBOLS

HWS	HOT WATER SUPPLY
HWR	HOT WATER RETURN
CA	COMPRESSED AIR
CHWS	CHILLED WATER SUPPLY
CHWR	CHILLED WATER RETURN
DG	DIGESTER GAS
EFWS	EFFLUENT WATER SUPPLY
EFWR	EFFLUENT WATER RETURN
D	DRAIN
FOS	FUEL OIL SUPPLY
FOR	FUEL OIL RETURN
V	VENT
FOV	FUEL OIL VENT
FOG	FUEL OIL GAUGE
NG	NATURAL GAS
CW	COLD WATER
MU	MAKE-UP WATER
	EXPANSION JOINT
	DIRECTION OF PITCH
	ELBOW UP
	ELBOW DOWN
	TEE DOWN
	TEE UP
	PIPE CAP
	CONNECTION UP
	CONNECTION DOWN
	ALIGNMENT GUIDE
	ANCHOR
M	CONTROL VALVE, (2-WAY) ELECTRIC MOTOR OPERATED
M	CONTROL VALVE, (3-WAY) ELECTRIC MOTOR OPERATED
V	ISOLATION VALVE TYPE DESIGNATED IN SPECIFICATION
	BUTTERFLY VALVE
	CHECK VALVE
	GATE VALVE
	GLOBE VALVE
	TRIPLE DUTY VALVE (STRAIGHT, ANGLE PATTERN)
	BALANCING VALVE
	BALL VALVE
S	SOLENOID VALVE
	Y STRAINER
FS	FLOW SWITCH
	REDUCER (CONCENTRIC)
	REDUCER (ECCENTRIC)
	UNION
	THERMOMETER
	PRESSURE GAUGE
	FLEXIBLE CONNECTION
RL	REFRIGERANT LIQUID LINE
HG	HOT GAS LINE
RS	REFRIGERANT SUCTION LINE
S	CONTROL SWITCH
PS	PRESSURE SWITCH
	EXISTING PIPING/EQUIPMENT
	NEW PIPING/EQUIPMENT
	HIDDEN PIPING/EQUIPMENT

MISCELLANEOUS SYMBOLS

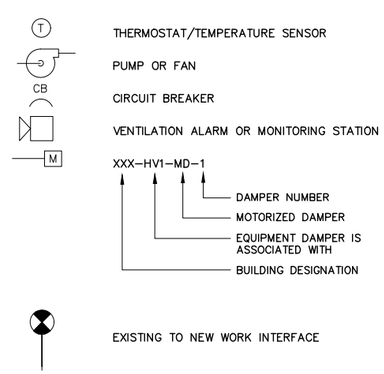

DUCTWORK SYMBOLS

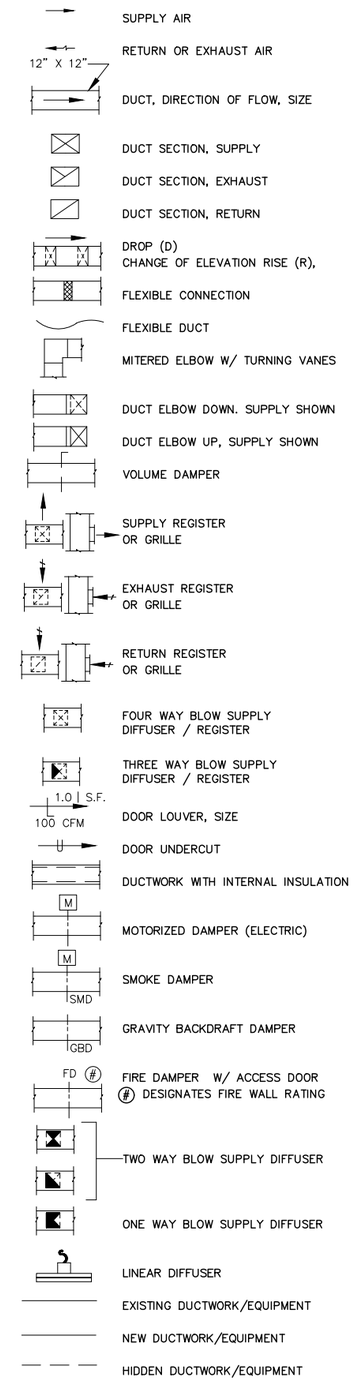

GENERAL NOTES

1. THE SYMBOLS AND ABBREVIATIONS LIST ON THIS SHEET IS A COMPREHENSIVE STANDARD GUIDE INTENDED FOR GENERAL USE ON ALL PROJECTS. NOT ALL THE SYMBOLS AND ABBREVIATIONS CONTAINED ARE NECESSARILY USED.
2. CONTRACTOR TO VERIFY FIELD CONDITIONS PRIOR TO BEGINNING WORK SHOWN.
3. LOCATION, ELEVATION AND DIMENSIONS OF EXISTING PIPING, DUCTWORK, STRUCTURES AND OTHER FEATURES ARE SHOWN ACCORDING TO THE BEST INFORMATION AVAILABLE AT THE TIME OF THE PREPARATION OF THESE PLANS BUT DO NOT PURPORT TO BE ABSOLUTELY CORRECT. THE CONTRACTOR SHALL VERIFY THE LOCATIONS, ELEVATIONS AND DIMENSIONS OF ALL EXISTING PIPING, DUCTWORK, STRUCTURES AND OTHER FEATURES AFFECTING HIS WORK PRIOR TO CONSTRUCTION. THE CONTRACTOR SHALL NOTIFY THE ENGINEER (IN WRITING) IF ANY LOCATIONS, ELEVATIONS AND DIMENSIONS OF EXISTING PIPING, DUCTWORK, STRUCTURES AND OTHER FEATURES SIGNIFICANTLY DIFFER FROM THOSE SHOWN. THE ENGINEER WILL ISSUE WRITTEN INSTRUCTIONS IF WARRANTED. IT IS THE INTENT OF THIS CONTRACT THAT THE CONTRACTOR BE RESPONSIBLE TO MAKE ANY AND ALL ADJUSTMENTS IN CONSTRUCTION NECESSARY TO SUIT EXISTING DIMENSIONS OR ELEVATIONS, AT NO CHANGE IN CONTRACT PRICE, UNLESS OTHERWISE DIRECTED BY THE ENGINEER.
4. ALL DUCT DIMENSIONS ARE CLEAR DIMENSIONS TO INSIDE OF DUCT. DIMENSIONS TO DUCTS FROM FLOOR OR WALL SHALL BE TO THE OUTSIDE OF DUCT. WHERE INTERNAL INSULATION IS REQUIRED, THE DUCT SIZE SHALL BE INCREASED TO GIVE CLEAR INSIDE DIMENSIONS.
5. EQUIPMENT SIZES AND LOCATIONS ARE APPROXIMATE. ACTUAL DIMENSIONS TO BE DETERMINED BY EQUIPMENT FURNISHED.
6. CONCRETE PAD SIZES AND LOCATIONS SHALL BE COORDINATED DURING CONSTRUCTION WITH APPROVED EQUIPMENT.
7. FINAL SIZES OF FLOOR OPENINGS, WALL OPENINGS, ROOF OPENINGS, DUCT PLENUMS, DUCT TRANSITIONS AND PIPING CONNECTIONS TO EQUIPMENT SHALL BE DETERMINED BY EQUIPMENT FURNISHED.
8. FIRST FIGURE OF DUCT SIZE INDICATES DIMENSION OF FACE SHOWN OR INDICATED.
11. WHERE PIPES OR DUCTS PENETRATE THROUGH EXISTING FLOORS, WALLS, OR SLABS, CORE DRILL OR SAW CUT PENETRATION.
13. VOLUME DAMPERS SHOWN OR DESCRIBED ON THE DRAWINGS ARE IN ADDITION TO OPPOSED BLADE DAMPERS PROVIDED WITH REGISTERS.
14. PROVIDE PIPE SLEEVES AND MECHANICAL SEALS FOR ALL PIPING AND CONTAINMENT CONDUIT PENETRATIONS THRU CONCRETE OR MASONARY CONSTRUCTION INCLUDING BUT NOT LIMITED TO WALLS, FLOORS, ROOFS, PADS, UNDERGROUND STRUCTURES EXCEPT WHERE OTHERWISE NOTED.

Hazen ARCADIS
A JOINT VENTURE

LEGAL ENTITY:
ARCADIS CE, INC.

SEALS

NASSAU COUNTY, NEW YORK
DEPARTMENT OF PUBLIC WORKS

LONG BEACH WPCP CONSOLIDATION PUMP STATION CONVERSION

LONG BEACH WASTEWATER POLLUTION CONTROL PLANT

NO.	DATE	ISSUED FOR	BY

COPYRIGHT: 2017 HAZEN AND SAWYER/ ARCADIS A JOINT VENTURE

DATE:	JULY 2020
PROJECT NO.:	00726790.0001
FILE NAME:	H-01
DESIGNED BY:	S. CHHEA
DRAWN BY:	J. BICHLER
CHECKED BY:	V. VITALE

SHEET TITLE

HVAC

ABBREVIATIONS, SYMBOLS AND GENERAL NOTES

SCALE:
NOT TO SCALE

H-01

SHEET 82 OF 112

User: JBICHLER Spec: AUS-NCSMOD File: \\NY03FP01\DATA\WHI_CAD\VOL2\ACAD\PROJ\00726790.0001\SHEETS\H-01.DWG Scale: 1:1 SavedDate: 7/17/2020 Time: 15:38 Plot Date: Bichler, Jordan; 7/20/2020; 10:05 ; Layout: H-01

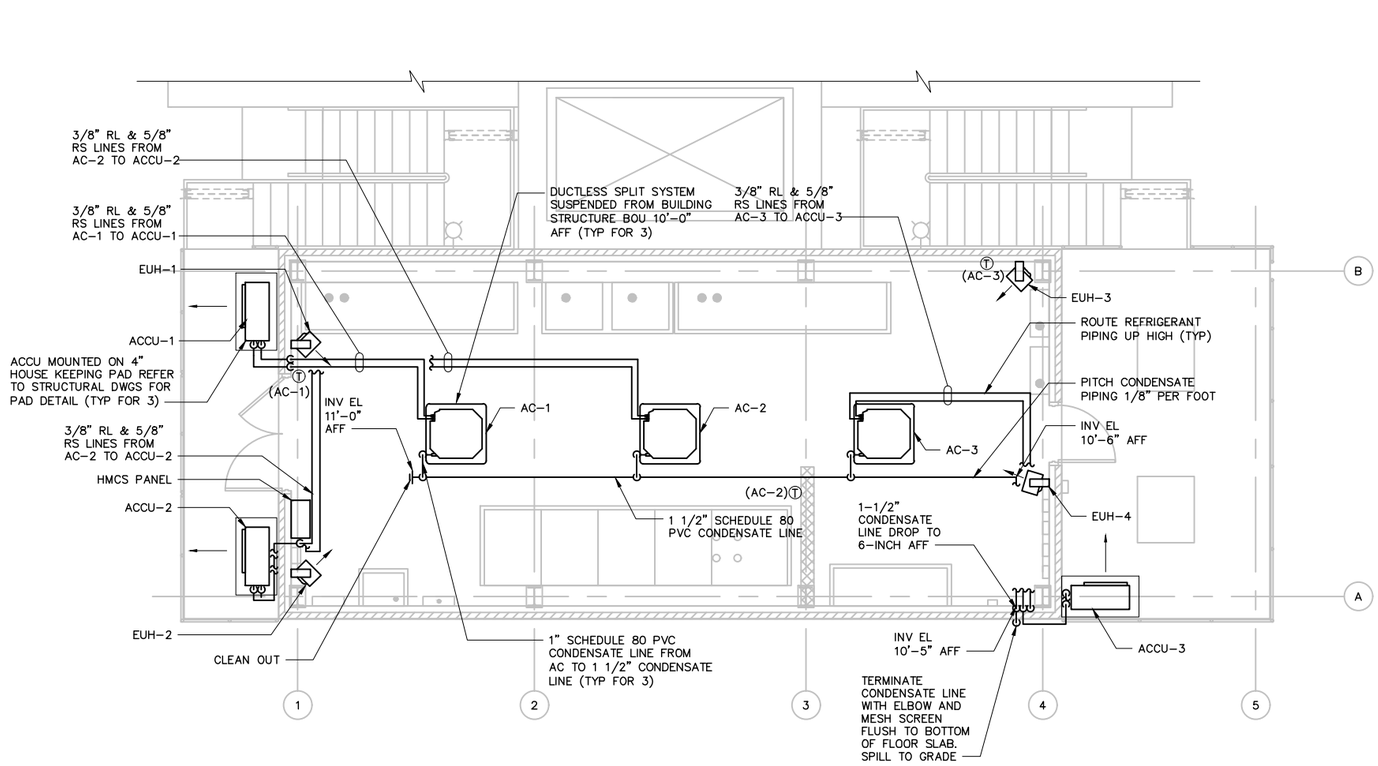

ELECTRICAL ROOM FLOOR PLAN

SCALE: 1/4" = 1'-0"

0 2' 4' 8'

NOTES:

1. PAINT ALL EXTERIOR CONDENSATE PIPING FOR UV PROTECTION.

Hazen ARCADIS
A JOINT VENTURE

LEGAL ENTITY:
ARCADIS CE, INC.

SEALS

STATE OF NEW YORK
LICENSED PROFESSIONAL ENGINEER
No. 072445

NASSAU COUNTY, NEW YORK
DEPARTMENT OF PUBLIC WORKS

LONG BEACH WPCP CONSOLIDATION
PUMP STATION CONVERSION

LONG BEACH WASTEWATER POLLUTION CONTROL PLANT

NO.	DATE	ISSUED FOR	BY

COPYRIGHT: 2017 HAZEN AND SAWYER/ ARCADIS A JOINT VENTURE

DATE: JULY 2020
PROJECT NO.: 00726790.0001
FILE NAME: H-02
DESIGNED BY: S. CHHEA
DRAWN BY: J. BICHLER
CHECKED BY: V. VITALE

SHEET TITLE

HVAC

ELECTRICAL ROOM PLAN

SCALE: 1/4" = 1'-0"

H-02

SHEET 83 OF 112

User:JBICHLER Spec:AUS-NCSM00 File:\\NY03FP01\DATA\WHI_CAD\VOL2\ACAD\PROJ\00726790.0001\SHEETS\H-02.DWG Scale:1:1 SavedDate:7/19/2020 Time:09:35 Plot Date: Bichler, Jordan; 7/20/2020; 10:13 ; Layout:H-02

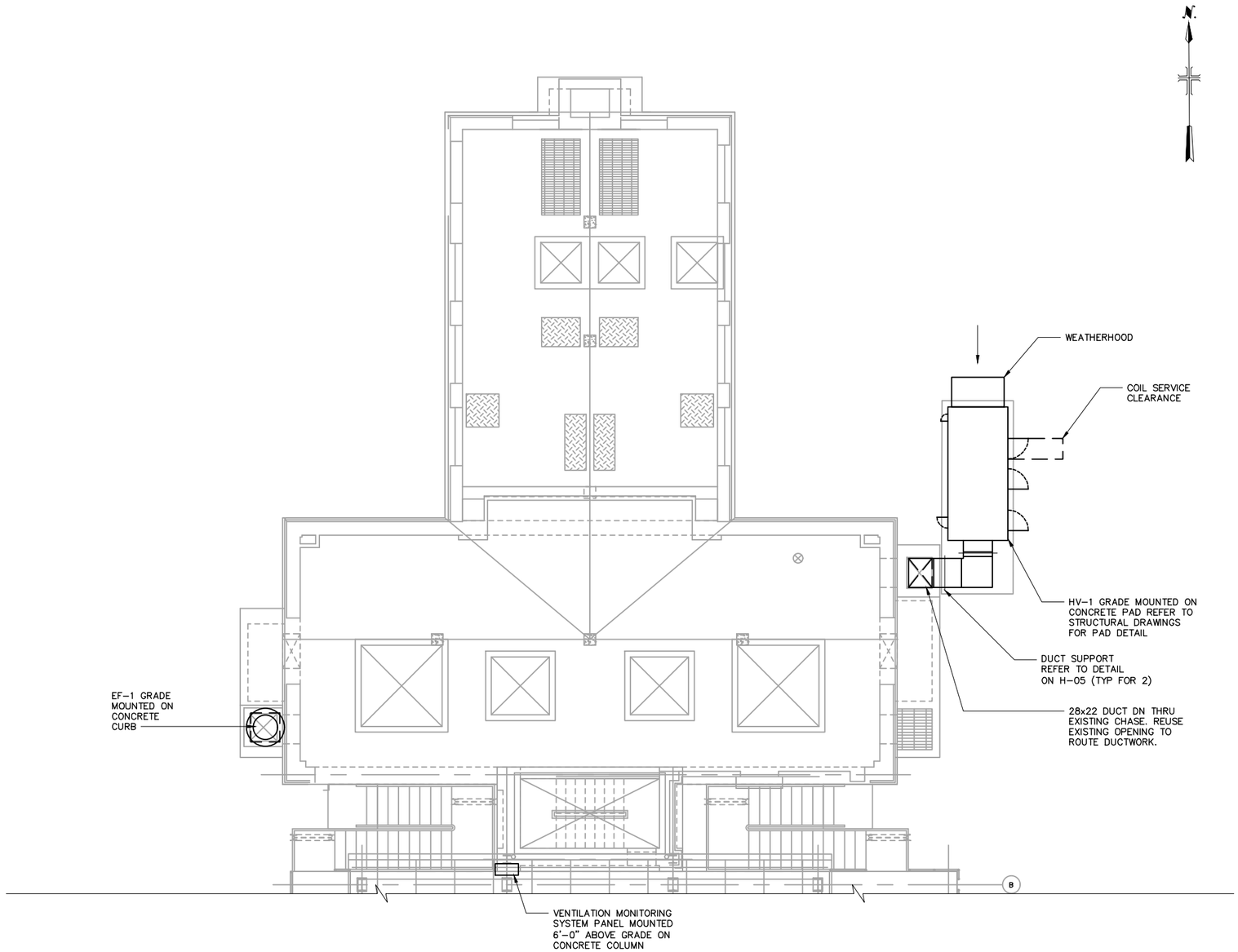

PARTIAL GRADE LEVEL PLAN

SCALE: 3/16" = 1'-0"

0 4' 8' 12'

Hazen ARCADIS
A JOINT VENTURE

LEGAL ENTITY:
ARCADIS CE, INC.

SEALS

NASSAU COUNTY, NEW YORK
DEPARTMENT OF PUBLIC WORKS

LONG BEACH WPCP CONSOLIDATION
PUMP STATION CONVERSION

LONG BEACH WASTEWATER POLLUTION CONTROL PLANT

NO.	DATE	ISSUED FOR	BY

COPYRIGHT: 2017 HAZEN AND SAWYER/ ARCADIS A JOINT VENTURE

DATE: JULY 2020
PROJECT NO.: 00726790.0001
FILE NAME: H-03
DESIGNED BY: S. CHHEA
DRAWN BY: J. BICHLER
CHECKED BY: V. VITALE

SHEET TITLE

HVAC

GRADE LEVEL PLAN

SCALE: 3/16" = 1'-0"

H-03

SHEET 84 OF 112

User: JBICHLER Spec: AUS-NCSMOD File: \\NYO3FP01\DATA\WHI_CAD\VOL2\ACAD\PROJ\00726790.0001\SHEETS\H-03.DWG Scale:1:1 SavedDate:7/17/2020 Time:15:34 Plot Date: Bichler, Jordan; 7/20/2020; 10:16 ; Layout:H-03

NOTES:

1. ROUTE DUCT THROUGH EXISTING OPENING.

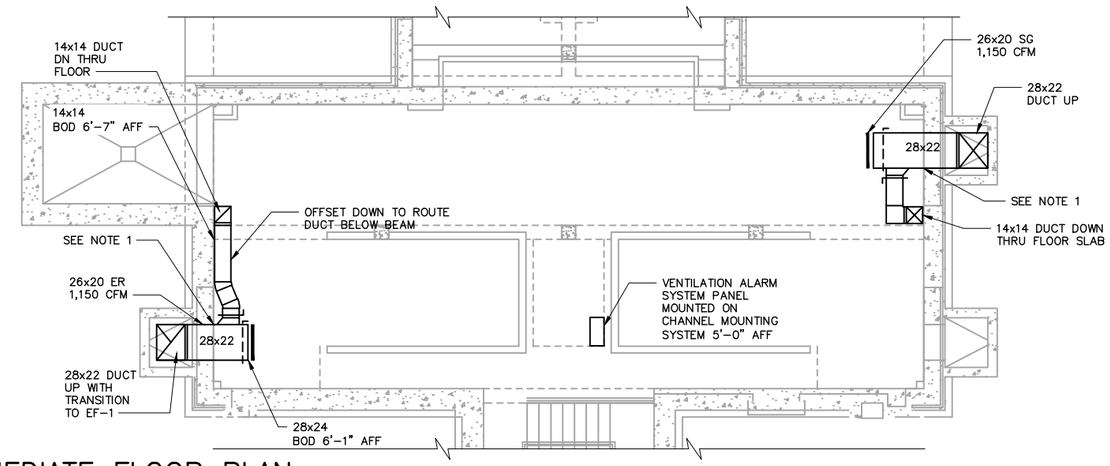

PARTIAL INTERMEDIATE FLOOR PLAN

SCALE: 3/16" = 1'-0"

0 4' 8' 12'

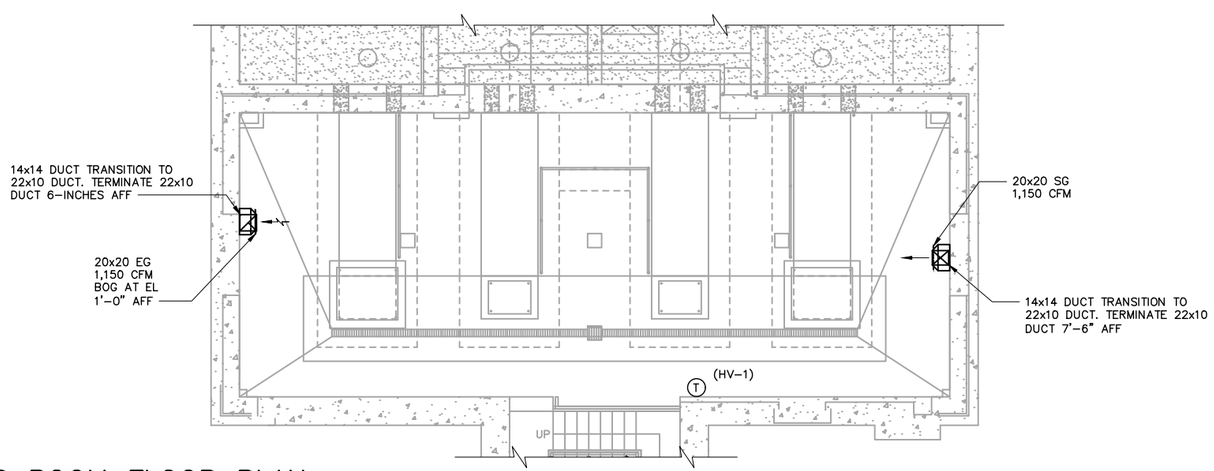

PARTIAL PUMP ROOM FLOOR PLAN

SCALE: 3/16" = 1'-0"

0 4' 8' 12'

Hazen ARCADIS A JOINT VENTURE

LEGAL ENTITY:
ARCADIS CE, INC.

SEALS

STATE OF NEW YORK · LICENSED PROFESSIONAL ENGINEER · No. 072445

NASSAU COUNTY, NEW YORK
DEPARTMENT OF PUBLIC WORKS

LONG BEACH WPCP CONSOLIDATION PUMP STATION CONVERSION

LONG BEACH WASTEWATER POLLUTION CONTROL PLANT

NO.	DATE	ISSUED FOR	BY

COPYRIGHT: 2017 HAZEN AND SAWYER/ ARCADIS A JOINT VENTURE

DATE: JULY 2020
PROJECT NO.: 00726790.0001
FILE NAME: H-04
DESIGNED BY: S. CHHEA
DRAWN BY: J. BICHLER
CHECKED BY: V. VITALE

SHEET TITLE

HVAC

PARTIAL FLOOR PLANS

SCALE: 3/16" = 1'-0"

H-04

SHEET 85 OF 112

User: JBICHLER Spec: AUS-NCSM00 File: \\NYO3FP01\DATA\WH_CAD\VOL2\ACAD\PROJ\00726790.0001\SHEETS\H-04.DWG Scale:1:1 SavedDate:7/17/2020 Time:15:32 Plot Date: Bichler, Jordan; 7/20/2020; 10:37 ; Layout:H-04

DUCTLESS SPLIT SYSTEM SCHEDULE

MARK NO. EVAPORATOR (INDOOR)	MARK NO CONDENSING UNIT (OUTDOOR)	INDOOR UNIT LOCATION	CONDENSING UNIT LOCATION	REFRIGERANT	EVAPORATOR (INDOOR) UNIT							CONDENSING (OUTDOOR) UNIT								BREAKER (AMPS)	SEER	NOTES
					TOTAL COOLING CAPACITY (MBH)	AIR FLOW (L-M1-M2-H CFM)	V/PH	MCA	MOUNTING	WEIGHT (LBS)	MFGR	MODEL	V/PH	FAN FLA	MOCP (A)	MCA	WEIGHT	MFGR	MODEL			
AC-1	ACCU-1	ELECTRICAL ROOM	OUTDOOR	R-410A	42.0	780-880-990-1090	208/1	2	SUSPENDED	55	MITSUBISHI	PLA	208/1	0.8	40	26	258	MITSUBISHI	PUY	30	14.4	1, 2
AC-2	ACCU-2	ELECTRICAL ROOM	OUTDOOR	R-410A	42.0	780-880-990-1090	208/1	2	SUSPENDED	55	MITSUBISHI	PLA	208/1	0.8	40	26	258	MITSUBISHI	PUY	30	14.4	1, 2
AC-3	ACCU-3	ELECTRICAL ROOM	OUTDOOR	R-410A	42.0	780-880-990-1090	208/1	2	SUSPENDED	55	MITSUBISHI	PLA	208/1	0.8	40	26	258	MITSUBISHI	PUY	30	14.4	1, 2

NOTES:
1. INDOOR UNIT POWERED FROM OUTDOOR UNIT.
2. PROVIDE MANUFACTURER'S DISCONNECT.

HEATING AND VENTILATING UNIT SCHEDULE

MARK NO.	LOCATION	SERVICE	TYPE	HEATING DATA KW	EAT (°F)	LAT (°F)	CONTROL TYPE	DRIVE TYPE	SUPPLY FAN DATA TOTAL AIRFLOW (CFM)	OUTSIDE AIR FLOW (CFM)	ESP (IN WG)	QTY	HP	BHP	MOTOR SPEED (RPM)	FILTER DATA THICKNESS (IN)	MERV RATING	TOTAL POWER MCA (AMPS)	MOP (AMPS)	V/PH/HZ	WEIGHT (LB)	MFR	MODEL	NOTES
HV-1	OUTDOOR	DRY WELL	ELECTRIC	45.0	0.0	61.8	SCR	DIRECT	2300	2300	0.75	1	2	1.06	1837	2	8	81.3	90	460/3/60	4000	ENGINEERED AIR	LMK-3/O	1,2,3

NOTES:
1. DISCONNECT PROVIDED BY ELECTRICAL.
2. 316 SS CONSTRUCTION.
3. PROVIDE VFD.

ELECTRIC UNIT HEATER SCHEDULE

MARK NO.	LOCATION	SERVICE	COIL DATA MBH	KW	V/PH/HZ	MOTOR DATA RPM	HP	V/PH/HZ	TOTAL AMPS	FAN CFM	TEMP RISE (°F)	THROW (FT)	DISCHARGE ORIENTATION	MOUNTING HEIGHT (AFF)	WEIGHT (LB)	MFR	MODEL	NOTES
EUH-1	ELECTRICAL ROOM	ELECTRICAL ROOM	17.1	5	480/3/60	1650	1/35	480/1/60	6.0	380	42	12	HORIZONTAL	8 FT	35	CHROMALOX	LUH	1,2
EUH-2	ELECTRICAL ROOM	ELECTRICAL ROOM	17.1	5	480/3/60	1650	1/35	480/1/60	6.0	380	42	12	HORIZONTAL	8 FT	35	CHROMALOX	LUH	1,2
EUH-3	ELECTRICAL ROOM	ELECTRICAL ROOM	17.1	5	480/3/60	1650	1/35	480/1/60	6.0	380	42	12	HORIZONTAL	8 FT	35	CHROMALOX	LUH	1,2
EUH-4	ELECTRICAL ROOM	ELECTRICAL ROOM	17.1	5	480/3/60	1650	1/35	480/1/60	6.0	380	42	12	HORIZONTAL	8 FT	35	CHROMALOX	LUH	1,2

NOTES:
1. PROVIDE MANUFACTURER'S INTEGRAL DISCONNECT.
2. PROVIDE MANUFACTURER'S INTEGRAL THERMOSTAT.

FAN SCHEDULE

MARK NO.	LOCATION	SERVICE	TYPE	DRIVE TYPE	AIRFLOW (CFM)	ESP (IN WG)	FAN SPEED	MOTOR DATA HP	BHP	RPM	V/PH/HZ	WEIGHT (LB)	MFR	MODEL	NOTES
EF-1	OUTDOOR	DRY WELL	UPBLAST CENTRIFUGAL	DIRECT	2300	0.38	1160	1/2	0.33	1160	460/3/60	180	HARTZELL	A87	1, 2

NOTES:
1. DISCONNECT PROVIDED BY ELECTRICAL.
2. FRP CONSTRUCTION.

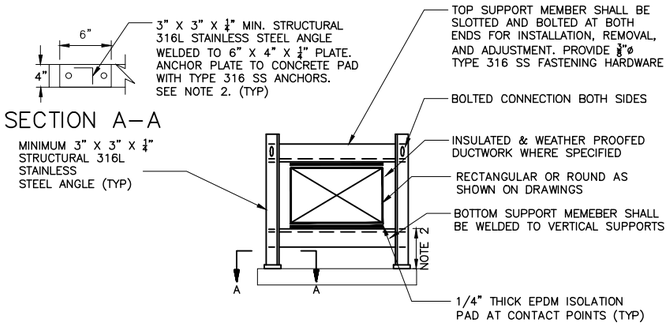

GRADE MOUNTED DUCTWORK SUPPORT DETAIL

NOTES:
1. DUCTWORK SUPPORTS SHALL BE ANCHORED TO CONCRETE PAD.
2. HEIGHT TO BE FIELD VERIFIED.

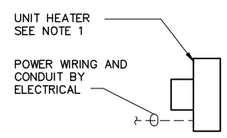

EUH SCHEMATIC

NOTES:
1. PROVIDE MANUFACTURER'S INTEGRAL THERMOSTAT.

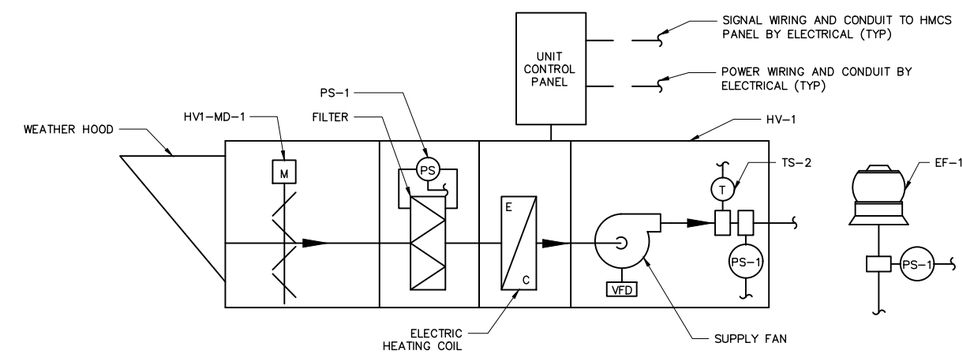

HV–1 AND EF–1 CONTROL SCHEMATIC

NOTES:
1. REFER TO SPECIFICATION 15950 FOR SEQUENCE OF OPERATIONS.

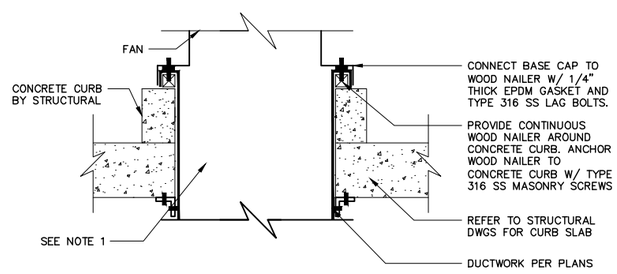

EXHAUST FAN ON CONCRETE CURB DETAIL

NOTES:
1. ELECTRICAL WIRING SHALL NOT BE ROUTED THROUGH DUCTWORK.

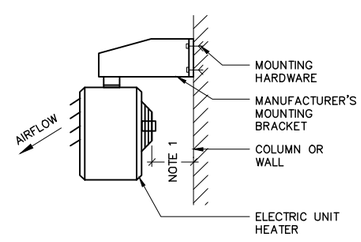

ELECTRIC UNIT HEATER MOUNTING DETAIL

NOTES:
1. MAINTAIN MANUFACTURER'S MINIMUM CLEARANCE REQUIREMENTS.

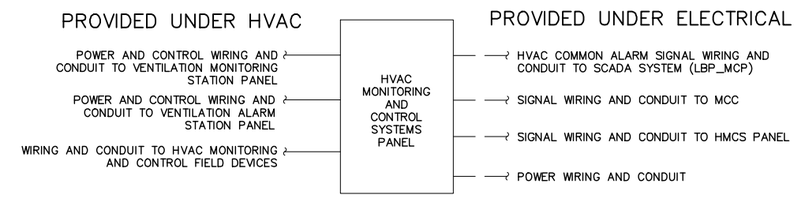

HVAC MONITORING AND CONTROL SYSTEMS

NOTES:
1. REFER TO SPECIFICATION 15950 FOR CONTROL EQUIPMENT AND SEQUENCE OF OPERATIONS.

Hazen ARCADIS A JOINT VENTURE

LEGAL ENTITY:
ARCADIS CE, INC.

SEALS

NASSAU COUNTY, NEW YORK
DEPARTMENT OF PUBLIC WORKS

LONG BEACH WPCP CONSOLIDATION PUMP STATION CONVERSION

LONG BEACH WASTEWATER POLLUTION CONTROL PLANT

NO.	DATE	ISSUED FOR	BY

COPYRIGHT: 2017 HAZEN AND SAWYER/ ARCADIS A JOINT VENTURE

DATE: JULY 2020
PROJECT NO.: 00726790.0001
FILE NAME: H–05
DESIGNED BY: S. CHHEA
DRAWN BY: J. BICHLER
CHECKED BY: V. VITALE

SHEET TITLE
HVAC

EQUIPMENT SCHEDULES, CONTROL SCHEMATICS AND DETAILS

SCALE: NOT TO SCALE

H–05

SHEET 86 OF 112

User: JBICHLER Spec: AUS-NCSMOD File: \\NYO3FP01\DATA\WHI_CAD\VOL2\ACAD\PROJ\00726790.0001\SHEETS\H-05.DWG Scale: 1:1 SavedDate: 7/19/2020 Time: 09:02 Plot Date: Bichler, Jordan; 7/20/2020; 10:27 ; Layout:H-03

SYMBOLS

SYMBOL	DESCRIPTION
	SANITARY PIPING ABOVE GRADE (SOIL OR WASTE)
—AW—	ACID WASTE
	SANITARY PIPING BELOW GRADE (SOIL OR WASTE)
— —AV— —	ACID VENT
—G—	NATURAL GAS
—F—	FOUNDATION DRAIN
	VENT PIPING
—TW—	TEPID WATER
—SD—	STORM DRAINAGE PIPING ABOVE GRADE
— —SD— —	STORM DRAINAGE PIPING BELOW GRADE
—SW—	SERVICE WATER
— - —	COLD WATER PIPING
	HOT WATER PIPING
	PRESSURE REDUCING VALVE
	GATE VALVE (4–INCH & LARGER PIPING)
	GLOBE VALVE
	BALL VALVE
	CHECK VALVE
	PLUG VALVE
	FLOW–IN DIRECTION OF ARROW
	PIPE DROP, UNLESS OTHERWISE NOTED
	PIPE RISE, UNLESS OTHERWISE NOTED
	RISE OR DROP IN RUN OF PIPE
	BRANCH – TOP CONNECTION
	BRANCH – BOTTOM CONNECTION
	BRANCH CONNECTION SIDE
	CAP ON END OF PIPE
	CLEANOUT PLUG
FCO	FLOOR CLEANOUT
	VALVE IN VERTICAL (VIV)
WCO	WALL CLEANOUT
	STRAINER–WYE TYPE W/ BALL VALVE BLOW–OFF
	P–TRAP
	FLOOR DRAIN
	SUMP PUMP
	CONNECT TO EXISTING

ABBREVIATIONS

ABBREVIATION	DESCRIPTION
AD	AREA DRAIN
AFF	ABOVE FINISHED FLOOR
AVB	ATMOSPHERIC VACUUM BREAKER
AVTR	ACID VENT THRU ROOF
BOT	BOTTOM
CA	COMPRESSED AIR
℄	CENTERLINE
CLG	CEILING
CO	CLEANOUT
CONN	CONNECT/CONNECTION
CONT	CONTINUATION
CW	COLD WATER
DF	DRINKING FOUNTAIN
DIA	DIAMETER
DN	DOWN (PENETRATES FLOOR SLAB)
DR	DRAIN
EL	ELEVATION
EES	EMERGENCY EYEWASH AND SHOWER
EW	EYE WASH
EWH	ELECTRIC WATER HEATER
EXIST	EXISTING
FCO	FLOOR CLEANOUT
FIXT	FIXTURE
FD	FLOOR DRAIN
FIN FL	FINISHED FLOOR
FS	FLOOR SINK
FT	FEET
G	GAS
GAL	GALLONS
GCO	GRADE CLEANOUT
GPM	GALLONS PER MINUTE
HB	HOSE BIBB
HW	HOT WATER
IE	INVERT ELEVATION
IW	INDIRECT WASTE
KS	KITCHEN SINK
LAV	LAVATORY
MAX	MAXIMUM
MIN	MINIMUM
MS	MOP SINK
NC	NORMALLY CLOSED
NTS	NOT TO SCALE
OD	OUTSIDE DIAMETER
PRV	PRESSURE REDUCING VALVE
PSI	POUNDS PER SQUARE INCH (GAUGE)
PW	POTABLE WATER
RPZ–BFP	REDUCED PRESSURE ZONE – BACKFLOW PREVENTER
S	SOIL
SAN	SANITARY
SD	STORM DRAIN

ABBREVIATIONS

ABBREVIATION	DESCRIPTION
SQ FT	SQUARE FOOT
SS	SERVICE SINK
ST STL	STAINLESS STEEL
TW	TEPID WATER
TWMV	TEPID WATER MIXING VALVE
TYP	TYPICAL
UP	UP (PENETRATES FLOOR SLAB)
UR	URINAL
USG	US STANDARD GAUGE
V	VENT
VAC	VACUUM
VB	VACUUM BREAKER
VIV	VALVE IN VERTICAL
VTR	VENT THROUGH ROOF
W	WASTE
WC	WATER CLOSET
WCO	WALL CLEAN OUT
WH	WALL HYDRANT
WHA	WATER HAMMER ARRESTER
W/	WITH
W/C	WATER COOLER

GENERAL NOTES

1. THE SYMBOLS AND ABBREVIATIONS LIST ON THIS SHEET IS A COMPREHENSIVE STANDARD GUIDE INTENDED FOR GENERAL USE ON ALL PROJECTS. THEREFORE NOT ALL THE SYMBOLS AND ABBREVIATIONS CONTAINED IN THIS LIST ARE NECESSARILY USED ON THIS PARTICULAR PROJECT AND SHOULD BE USED FOR CLARIFICATION ONLY.
2. ALL FLOOR DRAINS FOR EQUIPMENT SHALL BE AT LOW POINTS OF FLOORS/TRENCHES AND THE LOCATION SHALL BE FIELD COORDINATED IN THE APPROXIMATE LOCATIONS SHOWN ON THE DRAWINGS.
3. ALL BRANCH PIPING TO EQUIPMENT OR FIXTURES SHALL BE PROVIDED WITH SHUT–OFF VALVES, WHETHER SHOWN, OR NOT SHOWN ON DRAWINGS.
4. ALL PIPING SHALL BE CONCEALED WITHIN WALLS, PIPE SPACES AND HUNG CEILINGS EXCEPT IN MECHANICAL SPACES OR WHERE NOTED.
5. CHANGES IN DIRECTION IN DRAINAGE PIPING SHALL BE MADE BY THE USE OF 45 DEGREE ELLS, LONG SWEEPS, 90 DEGREE WYES W/CO'S OR BY A COMBINATION OF EQUIVALENT FITTINGS. THERE SHALL BE NO DOUBLE WYES IN THE HORIZONTAL PLANE.
6. SANITARY TEES AND QUARTER BENDS MAY BE USED IN DRAINAGE LINES ONLY WHERE DIRECTION OF FLOW IS FROM HORIZONTAL TO THE VERTICAL.
7. ALL CONTROL WIRING SHALL BE 120 VOLTS UNLESS OTHERWISE SPECIFIED. TRANSFORMERS SHALL BE PROVIDED WHERE REQUIRED.
8. ALL EQUIPMENT AND CONTROL MECHANISMS SHALL BE PIPED THROUGH UNION CONNECTIONS.
9. ALL WYE TYPE STRAINERS SHALL HAVE A 3–INCH LONG THREADED NIPPLE, THREADED END BALL VALVE AND PLUG ON BLOWDOWN SIDE.
10. ALL DRAINAGE PIPING 2 1/2" AND LESS SHALL SLOPE AT A MIN. OF 1/4" PER FT. DRAINAGE PIPING 3" AND LARGER SHALL SLOPE AT A MIN OF 1/8" PER FT.
11. AN ACCESSIBLE CLEANOUT SHALL BE PROVIDED AT THE BASE OF EACH SOIL STACK, WASTE STACK AND ROOF LEADER.

Hazen ARCADIS
A JOINT VENTURE

LEGAL ENTITY:
ARCADIS CE, INC.

SEALS

STATE OF NEW YORK · LICENSED PROFESSIONAL ENGINEER · No. 072448

NASSAU COUNTY, NEW YORK
DEPARTMENT OF PUBLIC WORKS

LONG BEACH WPCP CONSOLIDATION PUMP STATION CONVERSION

LONG BEACH WASTEWATER POLLUTION CONTROL PLANT

NO.	DATE	ISSUED FOR	BY

COPYRIGHT: 2017 HAZEN AND SAWYER/ ARCADIS A JOINT VENTURE

DATE: JULY 2020
PROJECT NO.: 00726790.0001
FILE NAME: P–01
DESIGNED BY: J. BICHLER
DRAWN BY: J. BICHLER
CHECKED BY: V. VITALE

SHEET TITLE

PLUMBING

ABBREVIATIONS, SYMBOLS AND GENERAL NOTES

SCALE: NOT TO SCALE

P–01

SHEET 87 OF 112

User: JBICHLER Spec: AUS–NCSM00 File: \\NY03FP01\DATA\WH_CAD\VOL2\ACAD\PROJ\00726790.0001\SHEETS\P–01.DWG Scale: 1:1 SavedDate: 7/16/2020 Time: 13:11 Plot Date: Bichler, Jordan; 7/20/2020; 11:03 ; Layout: P–01

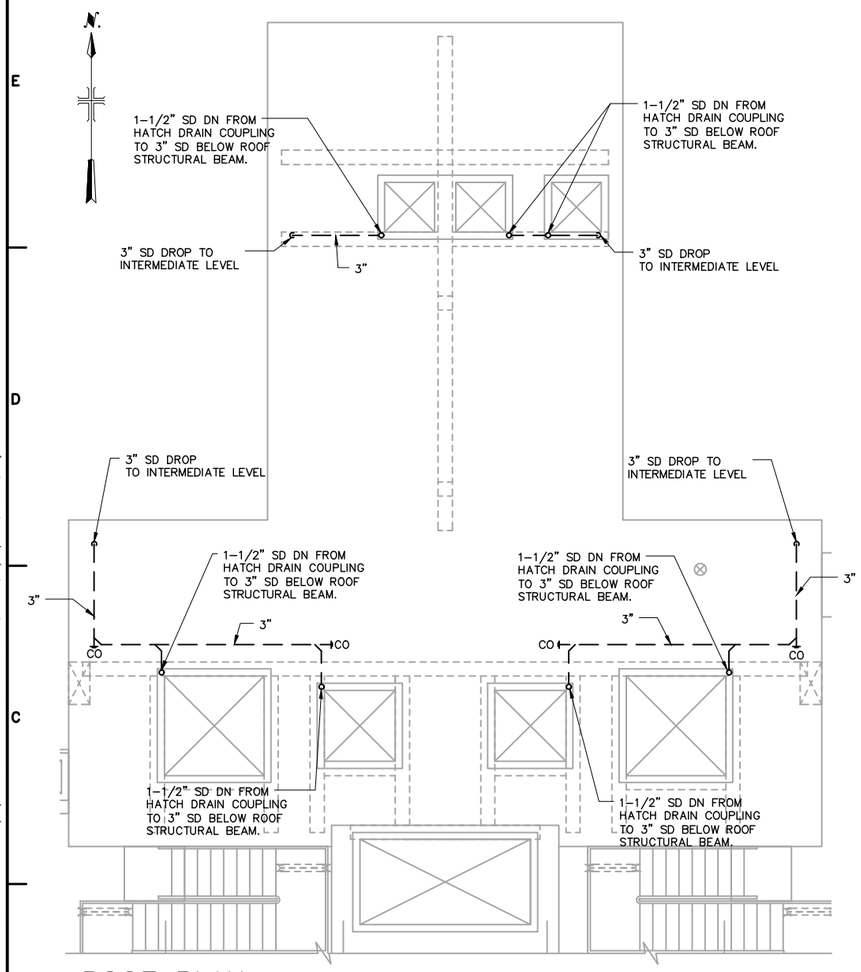

ROOF PLAN

SCALE: 3/16" = 1'-0"

0 4' 8' 12'

KEY NOTES (X):

1. CONTRACTOR TO PROVIDE MECHANICAL LINK SEAL.

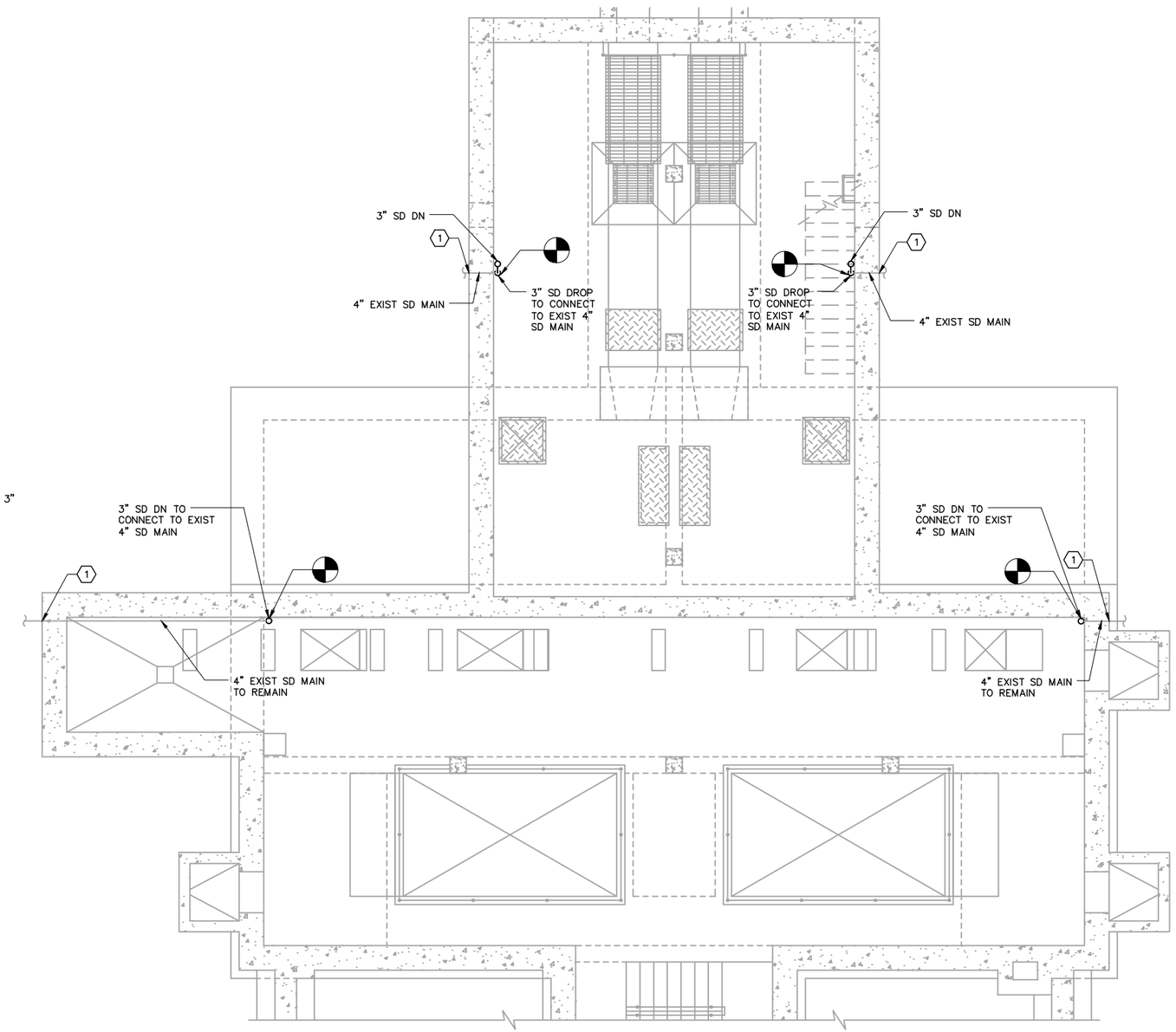

INTERMEDIATE FLOOR PLAN

SCALE: 1/4" = 1'-0"

0 2' 4' 8'

Hazen ARCADIS
A JOINT VENTURE

LEGAL ENTITY:
ARCADIS CE, INC.

SEALS

STATE OF NEW YORK
No. 072448
LICENSED PROFESSIONAL ENGINEER

NASSAU COUNTY, NEW YORK
DEPARTMENT OF PUBLIC WORKS

LONG BEACH WPCP CONSOLIDATION PUMP STATION CONVERSION

LONG BEACH WASTEWATER POLLUTION CONTROL PLANT

NO.	DATE	ISSUED FOR	BY

COPYRIGHT: 2017 HAZEN AND SAWYER/ ARCADIS A JOINT VENTURE

DATE: JULY 2020
PROJECT NO.: 00726790.0001
FILE NAME: P-02
DESIGNED BY: J. BICHLER
DRAWN BY: J. BICHLER
CHECKED BY: V. VITALE

SHEET TITLE

PLUMBING

PUMP ROOM ROOF AND INTERMEDIATE FLOOR PLAN

SCALE: AS SHOWN

P-02

SHEET 88 OF 112

User: JBICHLER Spec: AUS-NCSMOD File: \\NY03FP01\DATA\WH_CAD\VOL2\ACAD\PROJ\00726790.0001\SHEETS\P-02.DWG Scale: 1:1 SavedDate: 7/16/2020 Time: 13:19 Plot Date: Bichler, Jordan; 7/20/2020; 11:06 ; Layout: X

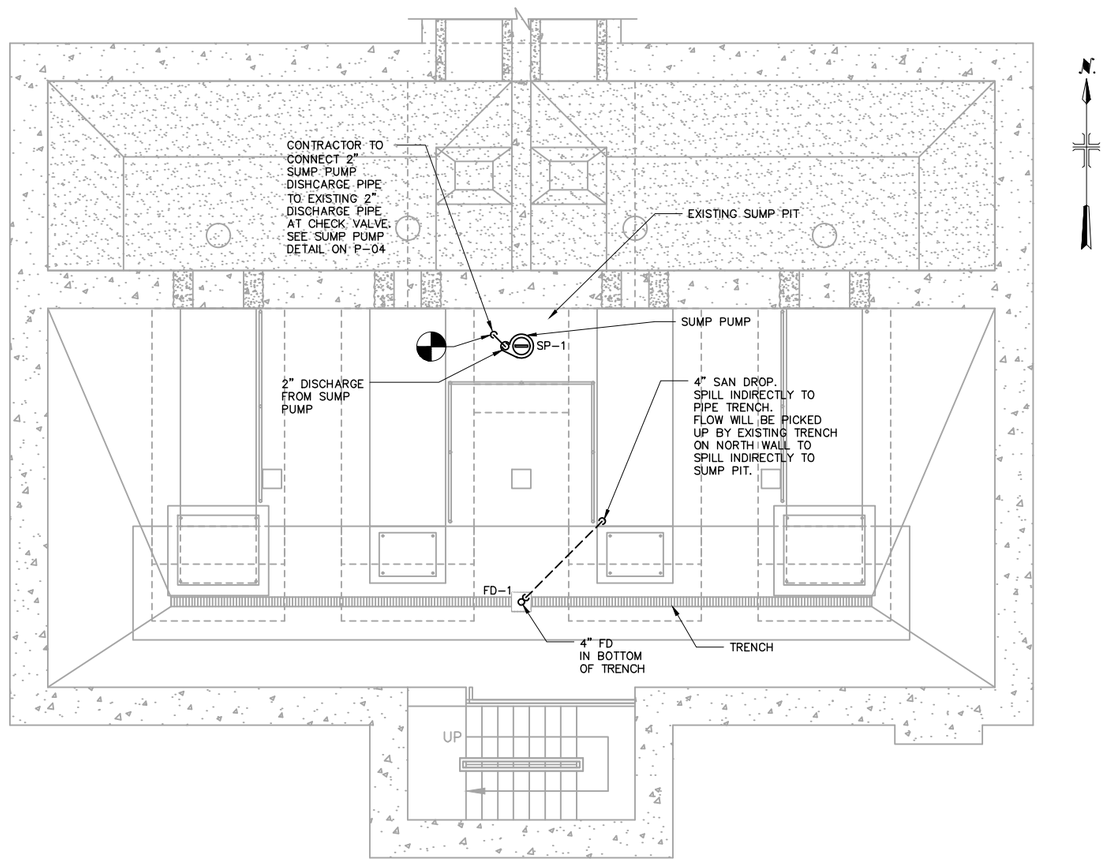

PUMP ROOM FLOOR PLAN

SCALE: 1/4" = 1'-0"

0 2' 4' 8'

Hazen ARCADIS
A JOINT VENTURE

LEGAL ENTITY:
ARCADIS CE, INC.

SEALS

NASSAU COUNTY, NEW YORK
DEPARTMENT OF PUBLIC WORKS

LONG BEACH WPCP CONSOLIDATION
PUMP STATION CONVERSION

LONG BEACH WASTEWATER POLLUTION CONTROL PLANT

NO.	DATE	ISSUED FOR	BY

COPYRIGHT: 2017 HAZEN AND SAWYER/ ARCADIS A JOINT VENTURE

DATE: JULY 2020
PROJECT NO.: 00726790.0001
FILE NAME: P-03
DESIGNED BY: J. BICHLER
DRAWN BY: J. BICHLER
CHECKED BY: V. VITALE

SHEET TITLE

PLUMBING

PUMP ROOM FLOOR PLAN

SCALE: 1/4" = 1'-0"

P-03

SHEET 89 OF 112

User: JBICHLER Spec: AUS-NCSMOD File: \\NY03FP01\DATA\WHI_CAD\V0L2\ACAD\PROJ\00726790.0001\SHEETS\P-03.DWG Scale: 1:1 SavedDate: 7/16/2020 Time: 13:22 Plot Date: Bichler, Jordan; 7/20/2020; 11:11 ; Layout: X

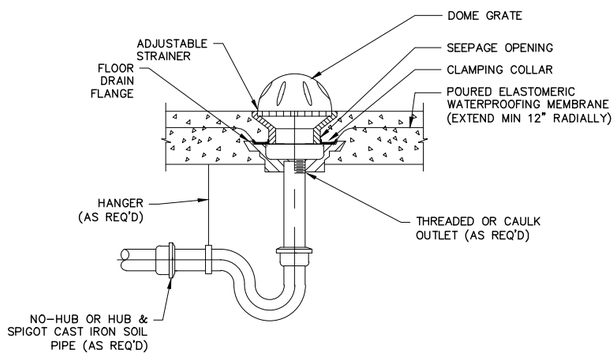

FLOOR DRAIN (FD-1) DETAIL

NOT TO SCALE

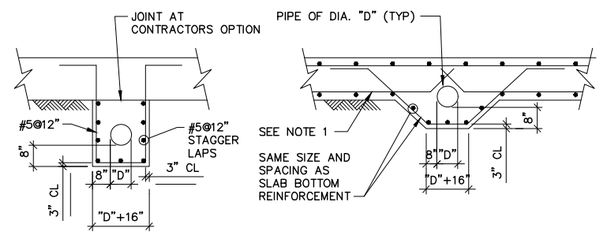

NOTES:

1. BOTTOM REINFORCEMENT TO BE CONTINUOUS WHERE POSSIBLE.
2. FOR PIPE SIZE "D" AND ELEVATION, SEE PLUMBING DRAWINGS.
3. ALL PIPES LOCATED BENEATH BASE SLABS SHALL BE ENCASED IN CONCRETE UNLESS OTHERWISE NOTED.

PIPE ENCASEMENT DETAIL

NOT TO SCALE

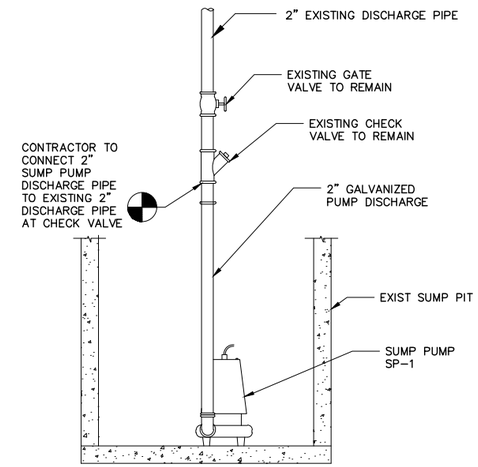

SUMP PUMP (SP-1) DETAIL

NOT TO SCALE

PIPE DIAMETER	SHIELD LENGTH	SHIELD THICKNESS
1/2" TO 1 1/2"	12"	18 USG
2" TO 4"	12"	16 USG
5" TO 6"	18"	16 USG
8" TO 14"	24"	14 USG
16" TO 30"	24"	12 USG

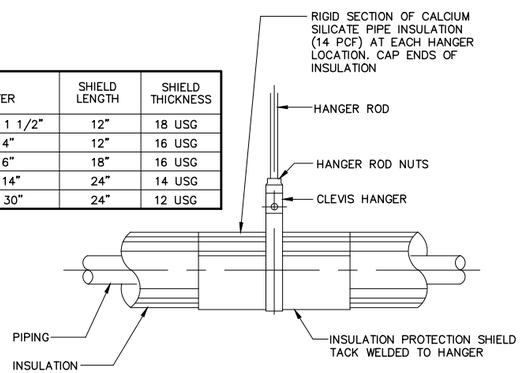

TYPICAL DETAIL HANGER ARRANGEMENT OF INSULATED PIPING

NOT TO SCALE

Hazen ARCADIS
A JOINT VENTURE

LEGAL ENTITY:
ARCADIS CE, INC.

SEALS

NASSAU COUNTY, NEW YORK
DEPARTMENT OF PUBLIC WORKS

LONG BEACH WPCP CONSOLIDATION PUMP STATION CONVERSION

LONG BEACH WASTEWATER POLLUTION CONTROL PLANT

NO.	DATE	ISSUED FOR	BY

COPYRIGHT: 2017 HAZEN AND SAWYER/ ARCADIS A JOINT VENTURE

DATE: JULY 2020
PROJECT NO.: 00726790.0001
FILE NAME: P-04
DESIGNED BY: J. BICHLER
DRAWN BY: J. BICHLER
CHECKED BY: V. VITALE

SHEET TITLE

PLUMBING

DETAILS

SCALE: NOT TO SCALE

P-04

SHEET 90 OF 112

User: JBICHLER Spec: AUS-NCSM00 File: \\NYO3FP01\DATA\WH_CAD\VOL2\ACAD\PROJ\00726790.0001\SHEETS\P-04.DWG Scale: 1:1 SavedDate: 7/16/2020 Time: 13:24 Plot Date: Bichler, Jordan; 7/20/2020; 11:14 ; Layout: X

ELECTRICAL SYMBOLS

- MOTOR STARTER/CONTROLLER (NON–COMBINATION – COMBINATION – MANUAL) RV DENOTES REDUCED VOLTAGE
- LOCAL CONTROL PANEL WITH CONTROLLERS FURNISHED BY EQUIPMENT VENDOR.
- I–2 GF/SS — DUPLEX CONVENIENCE RECEPTACLE, 2 POLE, 3 WIRE, 120 VOLTS A.C. 20 AMP RECEPTACLE DESIGNATIONS WITH NEMA 5–20R, FIRST NUMBER DENOTES PANEL, SECOND NUMBER DENOTES CIRCUIT NUMBER. GF–DENOTES GROUND FAULT TYPE. SS–DENOTES SURGE SUPPRESSION TYPE
- SINGLE CONVENIENCE RECEPTACLE, 2 POLE, 3 WIRE. REFER TO DRAWINGS FOR AMPERE AND VOLTAGE RATING.
- POWER RECEPTACLE, 3 PHASE, 4 WIRE, 480V A.C. WITH DISCONNECT SWITCH. REFER TO DRAWINGS FOR AMPERE RATING.
- POWER RECEPTACLE, 2 POLE, 3 WIRE 250 VOLTS A.C. REFER TO DRAWINGS FOR AMPERE RATINGS
- RECEPTACLE AS NOTED
- S — POWER ON–OFF SNAP SWITCH, 1PH, 120V AC, 20A
- S^a — SINGLE POLE SWITCH – LOWER CASE LETTER DENOTES SWITCHING.
- S_2 — TWO POLE SWITCH
- S_3 — THREE–WAY SWITCH
- S_4 — FOUR–WAY SWITCH
- S_M — SINGLE POLE MANUAL STARTER
- MS — TWO OR THREE POLE MANUAL STARTER, 20A
- LP1–2 / J / 10 — LETTERS AND NUMERALS INDICATE PANEL AND CIRCUIT NUMBER (LP1–2). CROSS LINES INDICATE NUMBER OF CONDUCTORS. HALF HASH MARKS INDICATES NEUTRAL. NUMBER DENOTES WIRE SIZE WHEN NOT #12 AWG. CONTINUE CONDUIT AND WIRE RUN FROM BOX TO DEVICE IN ROOM OR AREA AS NOTED BY BRANCH CIRCUIT NUMBER #10 AWG WIRING SHALL BE USED FOR RUNS BETWEEN PANEL AND FIRST LIGHTING FIXTURE OR RECEPTACLE EXCEEDING 50 FT, UNLESS OTHERWISE NOTED ON DRAWING.
- INDICATES GROUND CONDUCTOR
- C12 — INDICATES HOMERUN AND CONDUIT TAG; REFER TO ONE LINE AND INTERCONNECTION DIAGRAM
- XX–PANEL / LP1–15 — PANEL, DEVICE OR EQUIPMENT DESIGNATION. PANEL SHOWN WITH ASSOCIATED SUPPLY PANEL AND CIRCUIT NUMBER, UNLESS NOTED OTHERWISE. PROVIDE A 3/4"C–3#12 FOR EACH SUPPLY PANEL, TO PANEL DEVICE OR EQUIPMENT AS REQUIRED
- PUSHBUTTON STATION
- PUSHBUTTON STATION WITH LOCK–OUT FEATURE
- SELECTOR SWITCH
- INDICATING LIGHT
- CS — CONTROL STATION
- HOA — HAND–OFF–AUTOMATIC SELECTOR SWITCH CONTROL STATION
- LOR — LOCAL–OFF–REMOTE SELECTOR SWITCH CONTROL STATION
- DEVICE LOCATED IN FIELD AT OR NEAR MOTOR
- DEVICE LOCATED IN CONTROL PANEL
- VCS — CONTROL STATION FURNISHED BY EQUIPMENT VENDOR
- A AS — AMMETER – AMMETER SWITCH
- V VS — VOLTMETER – VOLTMETER SWITCH
- MF — METERING FUNCTIONS
- F / 60/40 — LINE SWITCH DISCONNECT – UNFUSED OR FUSED F DENOTES FUSING, ONLY WHERE INDICATED. FIRST NUMBER DENOTES SWITCH AMP RATING. SECOND NUMBER DENOTES FUSE SIZE WHEN PROVIDED.
- VFD — VARIABLE FREQUENCY DRIVE
- J OR JB — JUNCTION BOX; SIZE AS REQUIRED BY N.E.C.
- T OR TB — TERMINAL BOX; SIZE AS REQUIRED BY N.E.C. AND TO ACCOMODATE ALL TERMINATIONS ON TERMINAL BLOCKS. TERMINATIONS TO INCLUDE SPARE WIRING.
- MMD — MULTI FUNCTIONAL METERING DEVICE
- LA — LIGHTNING ARRESTOR
- PB — PULL BOX; SIZE AS REQUIRED BY N.E.C.
- K1 — LOCK FOR RESPECTIVE KEY INTERLOCK WITH KEY CAPTIVE IN LOCK
- OT — OVERTEMPERATURE DEVICE
- RTD — RESISTIVE TEMPERATURE DEVICE
- SH — MOTOR SPACE HEATER
- M S — ELECTRIC MOTOR (NUMBER INDICATES HORSEPOWER).
- PROVIDE CHANNEL SUPPORT. FOR 120 VOLT BRANCH CIRCUIT MOTORS, NUMERALS DENOTES DISTRIBUTION OR LIGHTING PANEL AND BRANCH CIRCUIT NUMBER.
- MV — MOTORIZED VALVE WITH CONTROLLER
- MG — MOTORIZED GATE WITH CONTROLLER
- GROUND TEST POINT
- GROUND ROD
- GROUND GRID CABLE CONNECTION
- G — GROUND
- #4/0 GROUND CABLE BURIED 2'–6" BELOW GRADE
- PFD — FUSE–PFD DENOTES PULL FUSE DISCONNECT TYPE
- PC — PHOTOCELL
- 1–3 — LED LIGHTING FIXTURE – CEILING OR PENDANT MOUNTED. SEE LIGHTING FIXTURE SCHEDULE FOR TYPE. FIRST NUMERAL DENOTES LIGHTING PANEL (LP1), SECOND NUMBER DENOTES BRANCH CIRCUIT NUMBER.
- 1–3 — LED LIGHTING FIXTURE WITH BATTERY PACK – CEILING OR PENDANT MOUNTED. SEE LIGHTING FIXTURE SCHEDULE FOR TYPE. FIRST NUMERAL DENOTES LIGHTING PANEL (LP1), SECOND NUMBER DENOTES BRANCH CIRCUIT NUMBER.
- CEILING OR PENDANT MOUNTED LIGHTING FIXTURE. SEE LIGHTING FIXTURE SCHEDULE FOR TYPE.
- CEILING OR PENDANT MOUNTED LIGHTING FIXTURE WITH QUARTZ BACKUP. SEE LIGHTING FIXTURE SCHEDULE FOR TYPE.
- WALL MOUNTED LIGHTING FIXTURE. SEE LIGHTING FIXTURE SCHEDULE FOR TYPE.
- POLE OR STANCHION MOUNTED LIGHTING FIXTURE. SEE LIGHTING FIXTURE SCHEDULE FOR TYPE.
- TWO (2) POLE OR STANCHION MOUNTED LIGHTING FIXTURES
- GF — POLE MOUNTED FIXTURE WITH GF RECEPTACLE
- EM — 2 LAMP SELF CONTAINED DC EMERGENCY LIGHTING UNIT. SEE LIGHTING FIXTURE SCHEDULE FOR DESCRIPTION. LETTER DENOTES FIXTURE TYPE. CONNECT TO ROOM LIGHTING CIRCUIT AHEAD OF SWITCH.
- EXIT SIGN, BATTERY BACKUP TYPE. CONNECT TO ROOM LIGHTING CIRCUIT AHEAD OF SWITCH
- D / 150 / 10'–0"AFF — FIXTURE DESIGNATION SYMBOL. SEE LIGHTING FIXTURE SCHEDULE FOR DESCRIPTION AND TYPE. ALL FIXTURES SHOWN IN A ROOM WITH THIS SYMBOL SHALL BE OF TYPE INDICATED BY LETTER; NUMBER IN SYMBOL INDICATES LAMP WATTAGE AND NUMBER OF LAMPS WHERE MORE THAN ONE (UNLESS OTHERWISE NOTED). NUMBER BELOW SYMBOL INDICATES MOUNTING HEIGHT ABOVE FINISHED FLOOR OR AS NOTED.
- CT — CURRENT TRANSFORMER
- POTENTIAL TRANSFORMER
- DEMOLITION
- T — THERMOSTAT
- 100 / 30 / 2P — (FRAME SIZE) / (TRIP SIZE) THERMAL–MAGNETIC BREAKER 2P DENOTES 2 POLE
- 7 / MCP — (CONTINUOUS RATING) (MOTOR CIRCUIT PROTECTOR)
- AC COMBINATION FULL VOLTAGE NON–REVERSING STARTER WITH MAGNETIC BREAKER
- TRANSFORMER– TYPE AND SIZE AS NOTED ON THE THE DRAWINGS AND IN SPECIFICATIONS
- INDICATES NEW EQUIPMENT/CONDUIT
- INDICATES EXISTING EQUIPMENT/CONDUIT
- INDICATES CONCEALED OR UNDERGROUND EQUIPMENT/CONDUIT
- SSC — INDICATES AUTOMATIC TRANSFER SWITCH WITH SOLID STATE CONTROLS AND ACCESSORIES
- SST / EO — 800 / 800 (600P) — (FRAME SIZE) / (SENSOR RATING) DENOTES PLUG RATING WHEN LESS THAN SENSOR RATING IS REQUIRED — DRAWOUT POWER CIRCUIT BREAKER WITH RMS TYPE SOLID STATE TRIP PROGRAMMER EO DENOTES ELECTRICALLY OPERATED
- SST — 800 / 600 (400P) — FIXED MOUNTED POWER OR MOLDED CASE CIRCUIT BREAKER WITH RMS TYPE SOLID STATE TRIP PROGRAMMER.
- 1–24 — UNIT HEATER–NUMERAL DENOTES LIGHTING PANEL AND BRANCH CIRCUIT NUMBER

INSTRUMENTS

- PS 123 — INSTRUMENT DEVICE: LETTERS IDENTIFY DEVICE FUNCTION, NUMBERS WHERE INDICATED DENOTE LOOP NUMBER
- PS — PRESSURE SWITCH (PSH DENOTES PRESSURE SWITCH HIGH AND PSL DENOTES PRESSURE LOW)
- FS — FLOW SWITCH (FSH DENOTES FLOW SWITCH HIGH AND FSL DENOTES FLOW SWITCH LOW)
- ZS — LIMIT SWITCH
- PIT — PRESSURE TRANSMITTER (I DENOTES INDICATING TYPE)
- A — INDICATING LIGHT LETTER "A" DENOTES AMBER COLOR LETTER "R" DENOTES RED COLOR
- SL — STROBE LIGHT
- AIT — ANALYSIS TRANSMITTER (AE DENOTES ANALYSIS ELEMENT)
- TS — TEMPERATURE SWITCH (TSH DENOTES TEMPERATURE SWITCH HIGH AND TSL DENOTES TEMPERATURE SWITCH LOW)
- LS — LEVEL SWITCH (LSH DENOTES LEVEL SWITCH HIGH AND LSL DENOTES LEVEL SWITCH LOW)
- MV — MOTORIZED VALVE
- SV — SOLENOID VALVE
- ZC — STROKE POSITIONER
- LIT — LEVEL TRANSMITTER (LE DENOTES LEVEL ELEMENT)
- FIT — FLOW TRANSMITTER (FE DENOTES FLOW ELEMENT)

MISCELLANEOUS SPECIAL SYSTEMS

- ACP — ALARM CONTROL PANEL
- FACP — FIRE ALARM CONTROL PANEL
- F — FIRE ALARM SYSTEM STROBE LIGHT/HORN COMBINATION
- F — FIRE ALARM SYSTEM MANUAL PULL STATION
- EPC — EMERGENCY PULL CORD
- END OF LINE RESISTOR
- XX — SPEAKER HORN
  - H = HORN
  - PS = PAGING SPEAKER
  - C = CEILING MOUNTED SPEAKER
- A/V — AUDIO VISUAL DEVICE
- A/V–S — AUDIO VISUAL STATION
- R — ALARM BEACON
- X XX — COMMUNICATION/TELEPHONE
  - D = DESK HANDSET AND SYSTEM OUTLET JACK
  - W = WALL HANDSET AND SYSTEM OUTLET JACK
  - EX = EXPLOSION PROOF
  - WP = WEATHERPROOF
  - (K) = KEYSET
  - (I) = INTERCOM

ABBREVIATIONS

AC	ALTERNATING CURRENT	NA	NON–AUTOMATIC
AFF	ABOVE FINISH FLOOR	NCTC	NORMALLY CLOSED, TIMED TO CLOSE
AFG	ABOVE FINISHED GRADE	NCTO	NORMALLY CLOSED, TIMED TO OPEN
ATC	AUTOMATIC TEMPERATURE CONTROL PANEL	NOTC	NORMALLY OPEN, TIMED TO CLOSED
ATS	AUTOMATIC TRANSFER SWITCH	NOTO	NORMALLY OPEN, TIMED TO OPEN
AWG	AMERICAN WIRE GAUGE	NTS	NOT TO SCALE
BKR	BREAKER	OL'S	MOTOR OVERLOAD HEATERS
C	CONDUIT	OT	OVER TEMPERATURE
CBV	CABLE BY VENDOR, INSTALLED BY CONTRACTOR	PB	PULL BOX
CKT	CIRCUIT	PNL	PANEL
CNT	CONTROL	PP	POWER PANEL
CP	CONTROL PANEL	PT	POTENTIAL TRANSFORMER
CPT	CONTROL POWER TRANSFORMER	PWR	POWER
CT	CURRENT TRANSFORMER	R1	RELAY #1
DP	DISTRIBUTION PANEL	RECEP	RECEPTACLE
EC	EMPTY CONDUIT	RVNR	REDUCED VOLTAGE NON–REVERSING
EGC	EQUIPMENT GROUND CONDUCTOR	(S) (SH)	SHIELDED CABLE
EF	EXHAUST FAN	SE	SERVICE ENTRANCE
EL	ELEVATION	SP	SPARE
EXP	EXPLOSION PROOF	SS	SELECTOR SWITCH
EXIST	EXISTING	SWBD	SWITCHBOARD
FDR	FEEDER	SWGR	SWITCHGEAR
FVNR	FULL VOLTAGE NON–REVERSING	TEMP	TEMPERATURE
G OR GND	GROUND	TEW	THERMOCOUPLE EXTENSION WIRE
GF	GROUND FAULT	UON	UNLESS OTHERWISE NOTED
H/O/A	HAND–OFF–AUTOMATIC	V	VOLT
JB	JUNCTION BOX	VFD	VARIABLE FREQUENCY DRIVE
LCP	LOCAL CONTROL PANEL	WP	WEATHERPROOF
LP	LIGHTING PANELBOARD	WT	WINDING TEMPERATURE RELAY
LTG	LIGHTING	XFMR	TRANSFORMER
M	MOTOR	NEC	NATIONAL ELECTRIC CODE
MCC	MOTOR CONTROL CENTER	(TYP)	TYPICAL
MCM	ONE THOUSAND CIRCULAR MILS	ø	PHASE
MCP	MOTOR CIRCUIT PROTECTOR	#	NUMBER
MMD	MICROPROCESSOR–BASED METERING DEVICE		
MTS	MANUAL TRANSFER SWITCH		
MC–8P	MULTI–CONDUCTOR NUMBER DENOTES QUANTITY OF PAIRS PAIR CABLE		

ANSI DEVICE RELAY AND FUNCTION DESIGNATIONS

27

25	–	AUTO SYNCHRONIZER	N	–	DENOTES NEUTRAL
25C	–	SYNC CHECK WITH DEAD BUS FEATURE	V	–	GENERATOR
26Q	–	LIQUID TEMPERATURE	59	–	OVER VOLTAGE
27	–	UNDER VOLTAGE WITH TIME DELAY	63PG	–	PRESSURE GAUGE
30	–	ANNUNICATOR RELAY	63PR	–	PRESSURE RELIEF
32	–	DIRECTIONAL POWER	67	–	AC DIRECTIONAL OVER CURRENT
U	–	UNDER	81	–	FREQUENCY
R	–	REVERSE	u	–	UNDER
33	–	POSITION SWITCH	o	–	OVER
40	–	LOSS OF EXCITATION	83	–	AUTOMATIC TRANSFER
43	–	MANUAL SWITCH	86	–	LOCKOUT HAND RESET
46	–	PHASE–BALANCE CURRENT	87	–	PHASE DIFFERENTIAL
47	–	PHASE–SEQUENCE VOLTAGE	T	–	DENOTES TRANSFORMER
49	–	THERMAL	B	–	DENOTES BUS
T	–	DENOTES TRANSFORMER HOT SPOT	G	–	DENOTES GENERATOR
			71Q	–	LIQUID LEVEL GAGE
M	–	DENOTES MOTOR			
50,51	–	INSTANTANEOUS OVERCURRENT AND TIME DELAY OVERCURRENT			
G	–	DENOTES GROUND			

GENERAL NOTES

1. THE SYMBOLS AND ABBREVIATIONS LIST ON THIS SHEET IS A COMPREHENSIVE STANDARD GUIDE INTENDED FOR GENERAL USE ON ALL PROJECTS. THEREFORE NOT ALL THE SYMBOLS AND ABBREVIATIONS CONTAINED IN THIS LIST ARE NECESSARILY USED ON THIS PARTICULAR PROJECT AND SHOULD BE USED FOR CLARIFICATION ONLY.
2. ALL MATERIALS AND EQUIPMENT SHALL CONFORM TO THE AREA CLASSIFICATION REQUIREMENTS SPECIFIED IN SECTION 16010. INDOOR AREA DESIGNATIONS FOR WET, CORROSIVE AND CLASSIFIED LOCATIONS ARE INDICATED ON THE DRAWINGS.
3. ALL WORK AT THE PROJECT SITE SHALL BE IN ACCORDANCE WITH JOB CONDITIONS SPECIFIED IN SECTION 16010.
4. PROVIDE JUNCTION BOX FOR ANY DEVICE WITH PIG TAIL SUCH AS SOLENOID VALVES, LIMIT SWITCHES, SMOKE DETECTORS AND ETC. FOR PROPER ELECTRICAL CONNECTION. PROVIDE ALL HARDWARE FOR MOUNTING OF JUNCTION BOX.
5. PROVIDE INDEPENDENT SUPPORT FOR DISCONNECT SWITCHES, CONTROL STATIONS, BOXES, PANELS, ETC. WHERE NO WALLS OR OTHER STRUCTURAL SURFACE EXISTS.
6. EQUIPMENT SIZES AND LOCATIONS ARE APPROXIMATE. ACTUAL DIMENSIONS TO BE DETERMINED BY EQUIPMENT FURNISHED.

Hazen ARCADIS A JOINT VENTURE

LEGAL ENTITY:
ARCADIS CE, INC.

SEALS

STATE OF NEW YORK · FRANK A. SANTORA · 073450 · LICENSED PROFESSIONAL ENGINEER

NASSAU COUNTY, NEW YORK
DEPARTMENT OF PUBLIC WORKS

LONG BEACH WPCP CONSOLIDATION
PUMP STATION CONVERSION

LONG BEACH WASTEWATER POLLUTION CONTROL PLANT

NO.	DATE	ISSUED FOR	BY

COPYRIGHT: 2017 HAZEN AND SAWYER/ ARCADIS A JOINT VENTURE

DATE: JULY 2020
PROJECT NO.: 00726790.0001
FILE NAME: E–01
DESIGNED BY: S. CURTIS
DRAWN BY: S. CURTIS
CHECKED BY: F. SANTORA

SHEET TITLE
ELECTRICAL
LEGEND, SYMBOLS AND ABBREVIATIONS

SCALE: NONE

E–01
SHEET 91 OF 112

User:AIYER Spec:DEP VERSION3 File:\\NY03FP01\DATA\WHI_CAD\VOL2\ACAD\PROJ\00726790.0001\SHEETS\E–01.DWG Scale:1:1 SavedDate:7/15/2020 Time:14:25 Plot Date: Iyer, Abhishek; 7/17/2020; 15:16 ; Layout:E–01

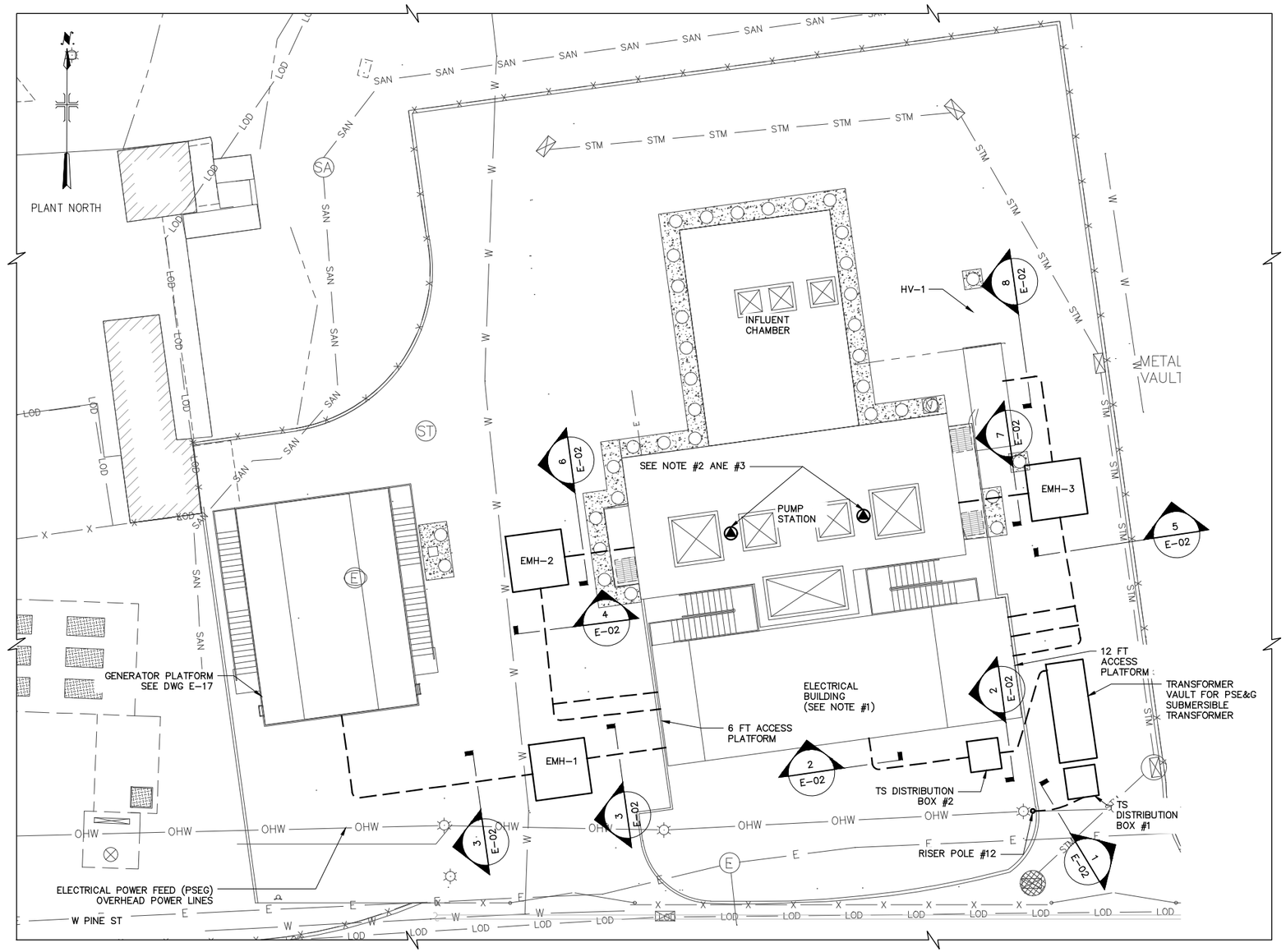

NOTES:
1. FOR CONTINUATION OF DUCT BANKS AT ELECTRICAL BUILDING SEE DRAWING E-18.
2. PROVIDE TWO POWER RECEPTACLES AND ASSOCIATED SUPPORTS AND LOCATE AT STATION TOP SLAB FOR HOIST OPERATION. RECEPTACLES SHALL BE WEATHERPROOF AND RATED SUFFICIENTLY FOR OPERATION OF A 208 VOLT, 3 PHASE, 5 HORSEPOWER HOIST WITH GROUND.
3. PROVIDE A ONE INCH CONDUIT WITH 3#10 & 1#12G FOR EACH RECEPTACLE AND ROUTE IN TOP SLAB TO PULL BOX PB6B FOR LP1-27 CIRCUIT CONNECTIONS.

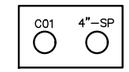

SECTION 1 E-02
NTS

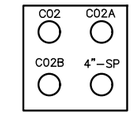

SECTION 2 E-02
NTS

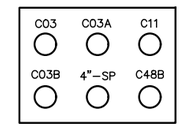

SECTION 3 E-02
NTS

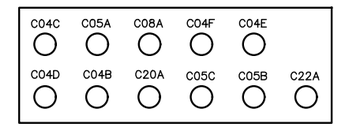

SECTION 4 E-02
NTS

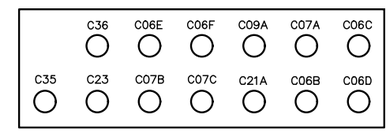

SECTION 5 E-02
NTS

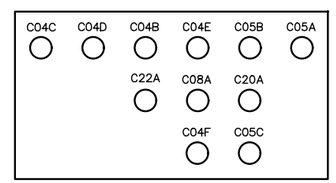

SECTION 6 E-02
NTS

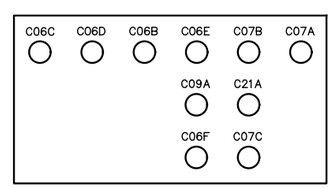

SECTION 7 E-02
NTS

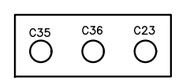

SECTION 8 E-02
NTS

Hazen ARCADIS
A JOINT VENTURE

LEGAL ENTITY:
ARCADIS CE, INC.

SEALS

NASSAU COUNTY, NEW YORK
DEPARTMENT OF PUBLIC WORKS

LONG BEACH WPCP CONSOLIDATION
PUMP STATION CONVERSION

LONG BEACH WASTEWATER POLLUTION CONTROL PLANT

NO.	DATE	ISSUED FOR	BY

COPYRIGHT: 2017 HAZEN AND SAWYER/ ARCADIS A JOINT VENTURE

DATE: JULY 2020
PROJECT NO.: 00726790.0001
FILE NAME: E-02
DESIGNED BY: F. SANTORA
DRAWN BY: A. IYER
CHECKED BY: F. SANTORA

SHEET TITLE
ELECTRICAL
SITE PLAN

SCALE: 1"=10'-0"

E-02
SHEET 92 OF 112

User: AIYER Spec: DEP VERSION3 File: \\NY03FP01\DATA\WHI_CAD\VOL2\ACAD\PROJ\00726790.0001\SHEETS\E-02.DWG Scale: 1:1 SavedDate: 7/17/2020 Time: 15:44 Plot Date: Iyer, Abhishek; 7/17/2020; 16:08 ; Layout: E-02

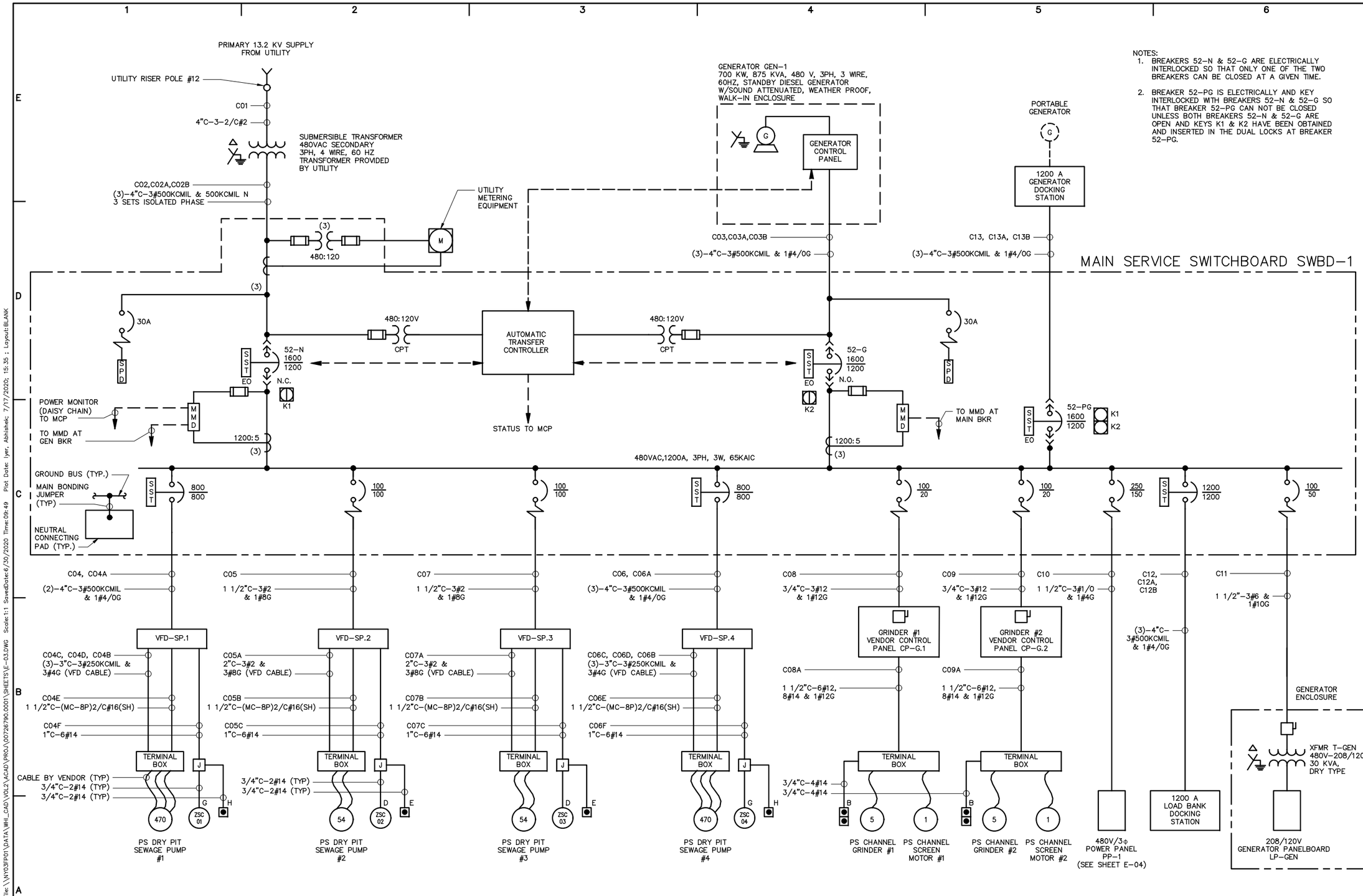

NOTES:
1. BREAKERS 52-N & 52-G ARE ELECTRICALLY INTERLOCKED SO THAT ONLY ONE OF THE TWO BREAKERS CAN BE CLOSED AT A GIVEN TIME.
2. BREAKER 52-PG IS ELECTRICALLY AND KEY INTERLOCKED WITH BREAKERS 52-N & 52-G SO THAT BREAKER 52-PG CAN NOT BE CLOSED UNLESS BOTH BREAKERS 52-N & 52-G ARE OPEN AND KEYS K1 & K2 HAVE BEEN OBTAINED AND INSERTED IN THE DUAL LOCKS AT BREAKER 52-PG.

LONG BEACH PUMP STATION SINGLE LINE DIAGRAM

NTS

Hazen ARCADIS A JOINT VENTURE

LEGAL ENTITY: ARCADIS CE, INC.

SEALS

NASSAU COUNTY, NEW YORK
DEPARTMENT OF PUBLIC WORKS

LONG BEACH WPCP CONSOLIDATION PUMP STATION CONVERSION

LONG BEACH WASTEWATER POLLUTION CONTROL PLANT

NO.	DATE	ISSUED FOR	BY

COPYRIGHT: 2017 HAZEN AND SAWYER/ ARCADIS A JOINT VENTURE

DATE:	JULY 2020
PROJECT NO.:	00726790.0001
FILE NAME:	E-03
DESIGNED BY:	S. CURTIS
DRAWN BY:	S. CURTIS
CHECKED BY:	F. SANTORA

SHEET TITLE

ELECTRICAL

SWBD-1 SINGLE LINE DIAGRAM

SCALE: NTS

E-03

SHEET 93 OF 112

User:AIYER Spec:DEP VERSION3 File:\\NY03FP01\DATA\WHL_CAD\VOL2\ACAD\PROJ\00726790.0001\SHEETS\E-03.DWG Scale:1:1 SavedDate:6/30/2020 Time:09:49 Plot Date: Iyer, Abhishek; 7/17/2020; 15:35 ; Layout:BLANK

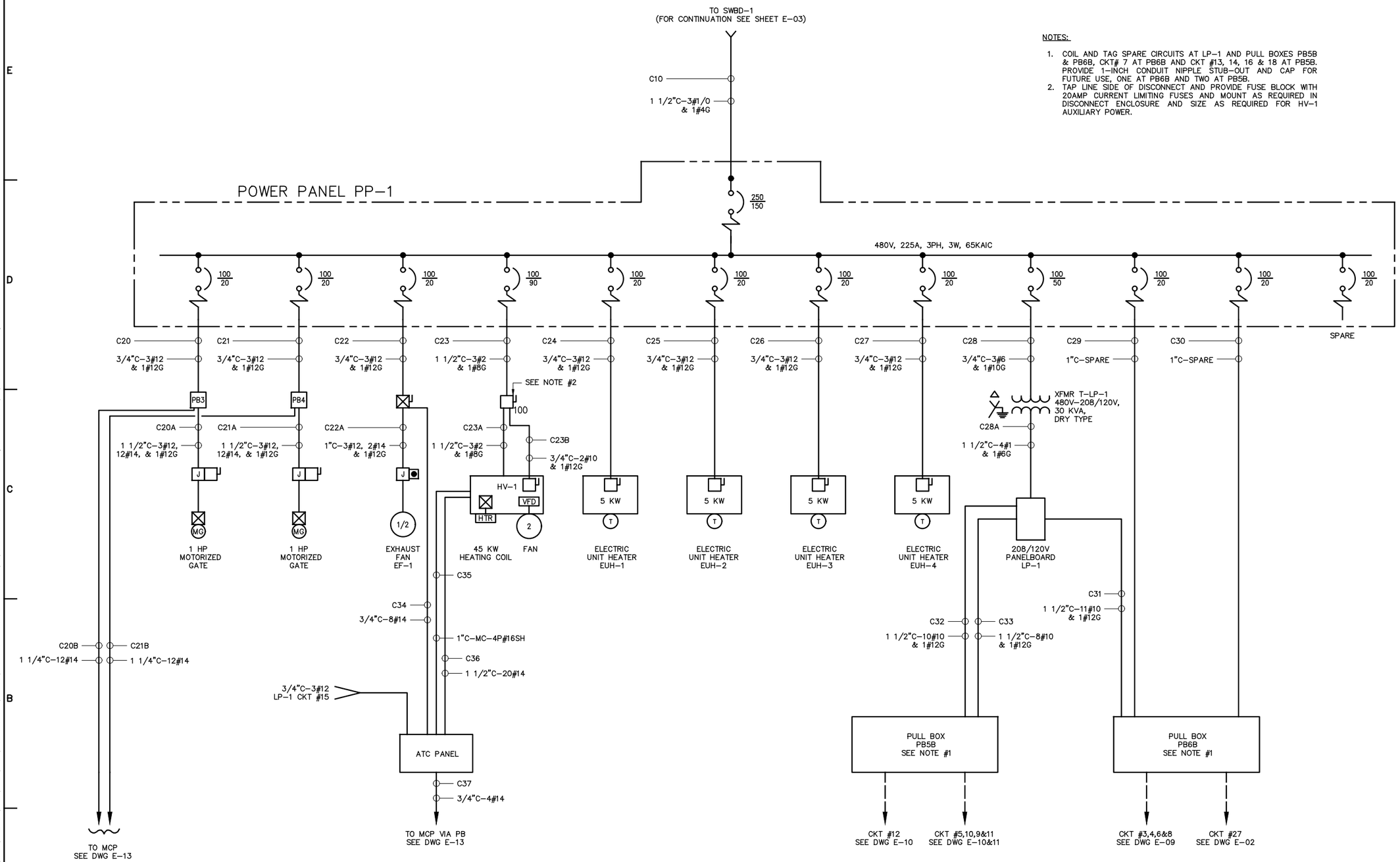

NOTES:

1. COIL AND TAG SPARE CIRCUITS AT LP-1 AND PULL BOXES PB5B & PB6B, CKT# 7 AT PB6B AND CKT #13, 14, 16 & 18 AT PB5B. PROVIDE 1-INCH CONDUIT NIPPLE STUB-OUT AND CAP FOR FUTURE USE, ONE AT PB6B AND TWO AT PB5B.
2. TAP LINE SIDE OF DISCONNECT AND PROVIDE FUSE BLOCK WITH 20AMP CURRENT LIMITING FUSES AND MOUNT AS REQUIRED IN DISCONNECT ENCLOSURE AND SIZE AS REQUIRED FOR HV-1 AUXILIARY POWER.

Hazen ARCADIS
A JOINT VENTURE

LEGAL ENTITY:
ARCADIS CE, INC.

SEALS

NASSAU COUNTY, NEW YORK
DEPARTMENT OF PUBLIC WORKS

LONG BEACH WPCP CONSOLIDATION
PUMP STATION CONVERSION

LONG BEACH WASTEWATER POLLUTION CONTROL PLANT

NO.	DATE	ISSUED FOR	BY

COPYRIGHT: 2017 HAZEN AND SAWYER/ ARCADIS A JOINT VENTURE

DATE: JULY 2020
PROJECT NO.: 00726790.0001
FILE NAME: E-04
DESIGNED BY: S. CURTIS
DRAWN BY: S. CURTIS
CHECKED BY: F. SANTORA

SHEET TITLE

ELECTRICAL

PP-1 SINGLE LINE DIAGRAM

SCALE: NTS

E-04

SHEET 94 OF 112

User: AYER Spec: DEP VERSION3 File: \\NY03FP01\DATA\WHI_CAD\VOL2\ACAD\PROJ\00726790.0001\SHEETS\E-04.DWG Scale: 1:1 SavedDate: 7/16/2020 Time: 13:46 Plot Date: Iyer, Abhishek; 7/17/2020; 15:36 ; Layout: BLANK

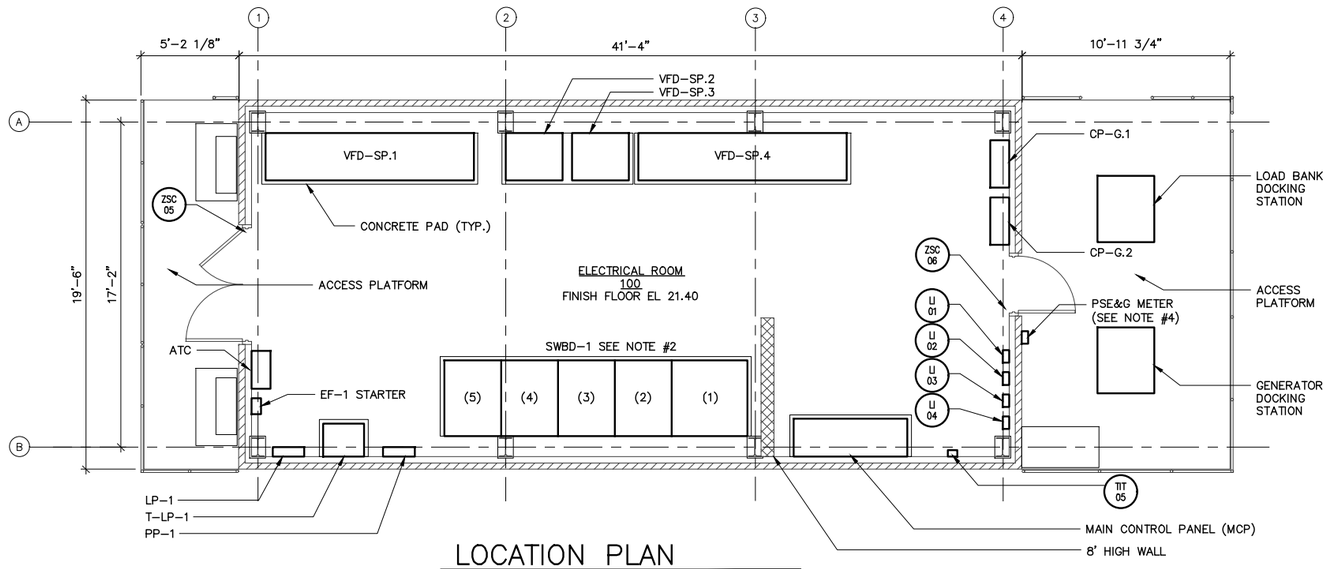

LOCATION PLAN

SCALE: 1/4" = 1'-0"

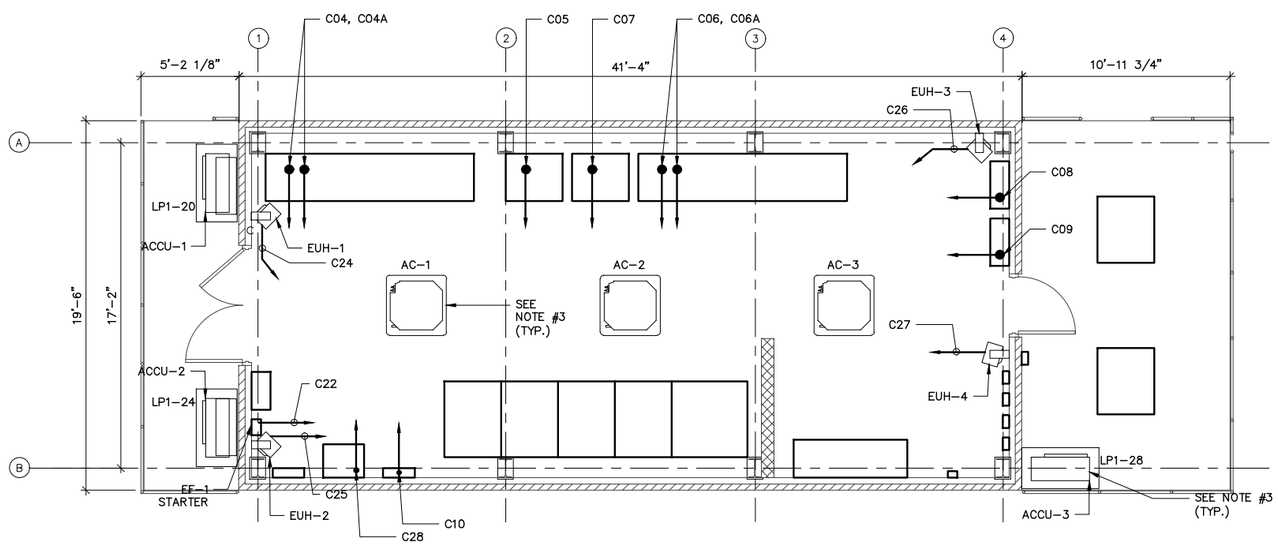

CONDUIT PLAN

SCALE: 1/4" = 1'-0"

NOTES:

1. THE INTERIOR OF THE ELECTRICAL BUILDING IS CONSIDERED A DRY LOCATION. THE EXTERIOR IS CONSIDERED A WET AND CORROSIVE LOCATION. ALL MATERIALS, EQUIPMENT, INCIDENTALS, ETC. SHALL CONFORM TO THE REQUIREMENTS OF THE AREA'S CLASSIFICATION.
2. SWITCHBOARD COMPARTMENT DESIGNATIONS ARE AS FOLLOWS:–
   (1) PSE&G METERING
   (2) BREAKER 52–N
   (3) BREAKER 52–PG
   (4) DISTRIBUTION
   (5) BREAKER 52–G
3. PROVIDE A 3/4" CONDUIT, 2#10 & 1#12 AND CONNECT EACH ACCU UNIT CONDUIT TO THE SUPPLY AT PANEL LP1. THE AC UNITS ARE SUPPLIED FROM ITS RESPECTIVE ACCU UNIT. PROVIDE A 3/4" CONDUIT, 3#12 AND CONNECT EACH AC UNIT TO THE SUPPLY AT THE RESPECTIVE ACCU UNIT.
4. PROVIDE MOUNTING PEDESTIAL, NOT SHOWN FOR SUPPORT OF METER. MOUNT INDEPENDENT FROM BUT CLOSE TO EXTERIOR WALL.

Hazen ARCADIS
A JOINT VENTURE

LEGAL ENTITY:
ARCADIS CE, INC.

SEALS

STATE OF NEW YORK · FRANK A. SANTORA · 073450 · LICENSED PROFESSIONAL ENGINEER

NASSAU COUNTY, NEW YORK
DEPARTMENT OF PUBLIC WORKS

LONG BEACH WPCP CONSOLIDATION
PUMP STATION CONVERSION

LONG BEACH WASTEWATER POLLUTION CONTROL PLANT

NO.	DATE	ISSUED FOR	BY

COPYRIGHT: 2017 HAZEN AND SAWYER/ ARCADIS A JOINT VENTURE

DATE:	JULY 2020
PROJECT NO.:	00726790.0001
FILE NAME:	E–05
DESIGNED BY:	S. CURTIS
DRAWN BY:	S. CURTIS
CHECKED BY:	F. SANTORA

SHEET TITLE

ELECTRICAL

ELECTRICAL BUILDING POWER PLAN

SCALE: 1/4" = 1'-0"

E–05

SHEET 95 OF 112

User:AYER Spec:DEP VERSION3 File:\\WY03FP01\DATA\WHI_CAD\VOL2\ACAD\PROJ\00726790.0001\SHEETS\E-05.DWG Scale:1:1 SavedDate:6/30/2020 Time:09:47 Plot Date: Iyer, Abhishek; 7/17/2020; 15:39 ; Layout:BLANK

NOTES:
1. EMBED CONDUIT IN CONCRETE SLAB AND ROUTE FOR CONNECTION OF GROUND CABLE TO GROUND BUS.
2. THE INTERIOR OF THE ELECTRICAL BUILDING IS CONSIDERED A DRY LOCATION. THE EXTERIOR IS CONSIDERED A WET AND CORROSIVE LOCATION. ALL MATERIALS, EQUIPMENT, INCIDENTALS, ETC. SHALL CONFORM TO THE REQUIREMENTS OF THE AREA'S CLASSIFICATION.
3. TERMINATE CONDUIT AT BASE OF ANTENNA MOUNTING POLE WITH CABLE TERMINATOR AND CONTINUE GROUND CABLE AS SHOWN ON I-DWG DETAILS.
4. CUPOLA LIGHT FIXTURE HEIGHT TO ALLIGN CENTER OF TRANSLUCENT WALL PANELS APPROXIMATE ELEVATION 39.23. CONNECT FIXTURE FOR ON/OFF OPERATION FROM PHOTOCELL.

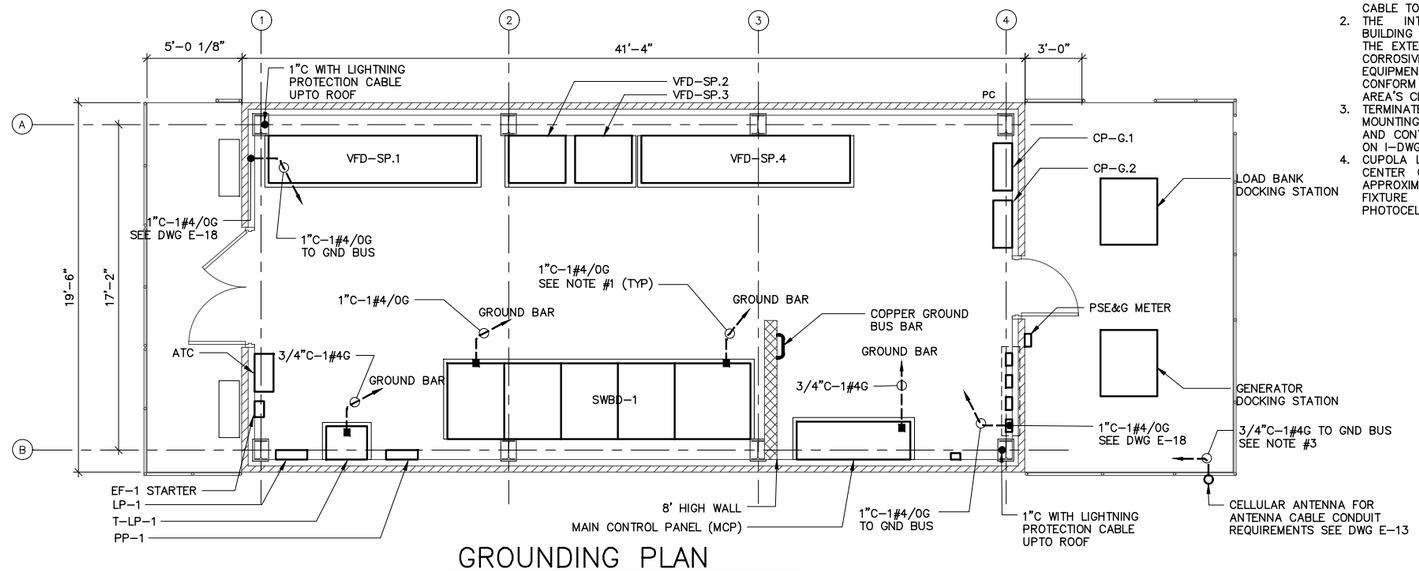

GROUNDING PLAN

SCALE: 1/4" = 1'-0"

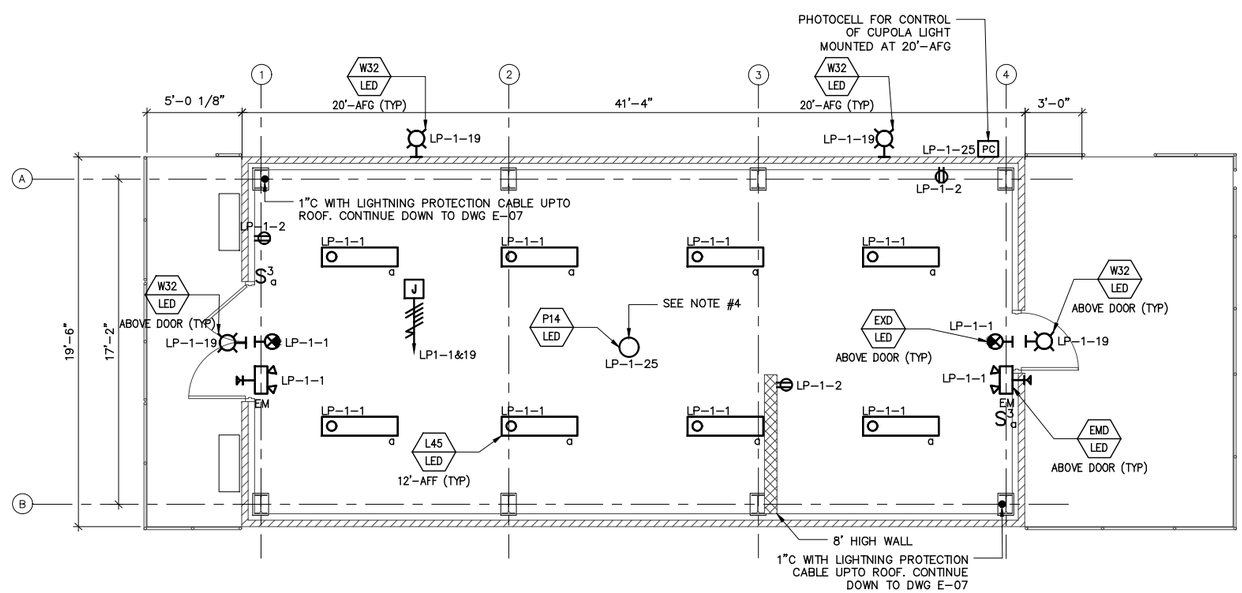

LIGHTING PLAN

SCALE: 1/4" = 1'-0"

Hazen ARCADIS
A JOINT VENTURE

LEGAL ENTITY:
ARCADIS CE, INC.

SEALS

NASSAU COUNTY, NEW YORK
DEPARTMENT OF PUBLIC WORKS

LONG BEACH WPCP CONSOLIDATION PUMP STATION CONVERSION

LONG BEACH WASTEWATER POLLUTION CONTROL PLANT

NO.	DATE	ISSUED FOR	BY

COPYRIGHT: 2017 HAZEN AND SAWYER/ ARCADIS A JOINT VENTURE

DATE:	JULY 2020
PROJECT NO.:	00726790.0001
FILE NAME:	E-06
DESIGNED BY:	S. CURTIS
DRAWN BY:	S. CURTIS
CHECKED BY:	F. SANTORA

SHEET TITLE

ELECTRICAL

ELECTRICAL BUILDING LIGHTING AND GROUNDING PLAN

SCALE: 1/4" = 1'-0"

E-06

SHEET 96 OF 112

User:AYER Spec:DEP VERSION3 File:\\WY03FP01\DATA\WHI_CAD\VOL2\ACAD\PROJ\00726790.0001\SHEETS\E-06.DWG Scale:1:1 SavedDate:7/16/2020 Time:09:30 Plot Date: Iyer, Abhishek; 7/17/2020; 15:43 ; Layout:BLANK

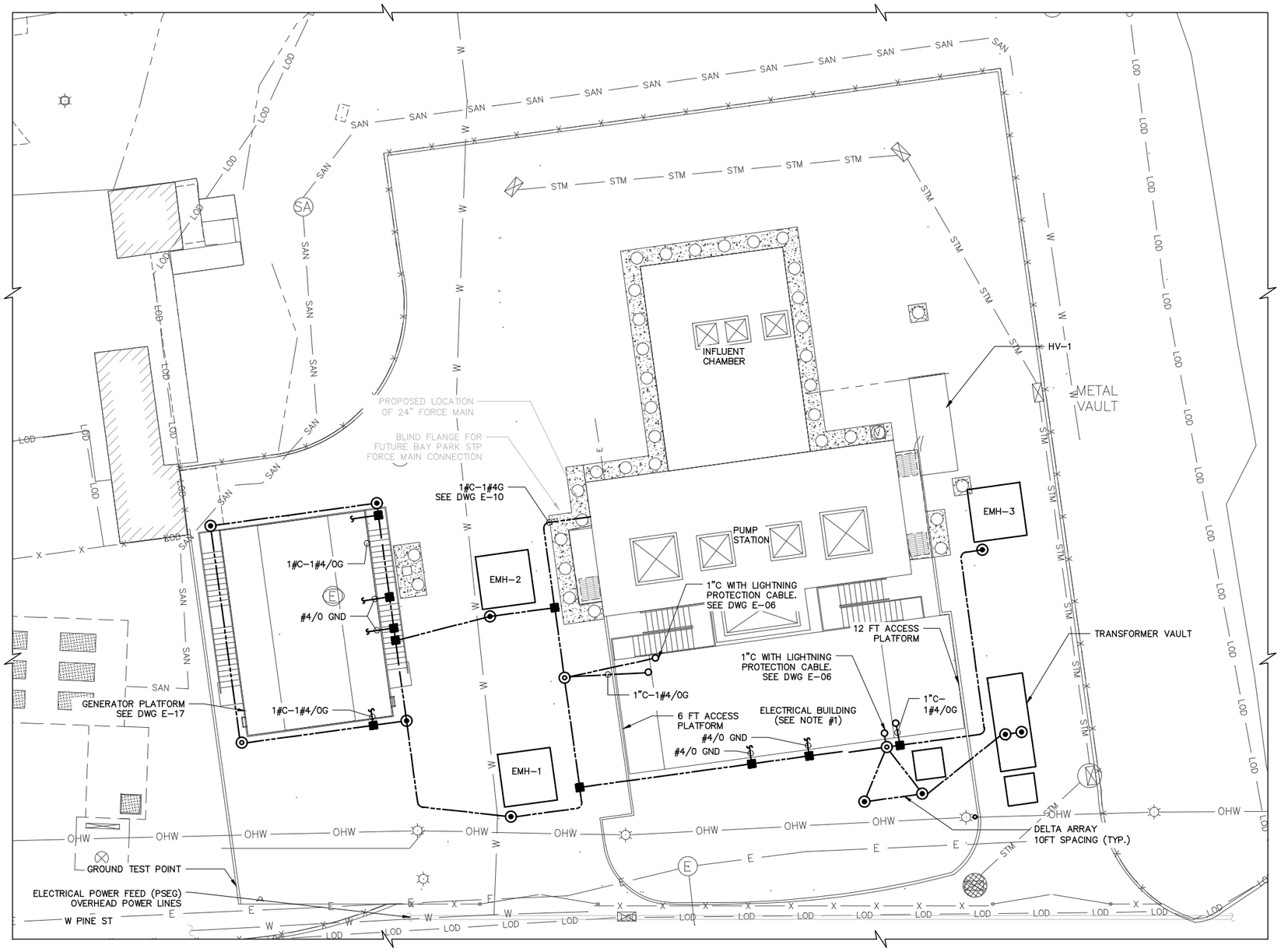

NOTES:

1. FOR CONTINUATION OF GROUNDING AT THE ELECTRICAL BUILDING SEE DWG E-18

Hazen ARCADIS
A JOINT VENTURE

LEGAL ENTITY:
ARCADIS CE, INC.

SEALS

NASSAU COUNTY, NEW YORK
DEPARTMENT OF PUBLIC WORKS

LONG BEACH WPCP CONSOLIDATION
PUMP STATION CONVERSION

LONG BEACH WASTEWATER POLLUTION CONTROL PLANT

NO.	DATE	ISSUED FOR	BY

COPYRIGHT: 2017 HAZEN AND SAWYER/ ARCADIS A JOINT VENTURE

DATE: JULY 2020
PROJECT NO.: 00726790.0001
FILE NAME: E-07
DESIGNED BY: F. SANTORA
DRAWN BY: A. IYER
CHECKED BY: F. SANTORA

SHEET TITLE

ELECTRICAL

SITE GROUNDING PLAN

SCALE: 1"=10'-0"

E-07

SHEET 97 OF 112

User:AIYER Spec:DEP VERSION3 File:\\NY03FP01\DATA\WHI_CAD\VOL2\ACAD\PROJ\00726790.0001\SHEETS\E-07.DWG Scale:1:1 SavedDate:7/17/2020 Time:16:06 Plot Date: Iyer, Abhishek; 7/17/2020; 16:39 ; Layout:BLANK

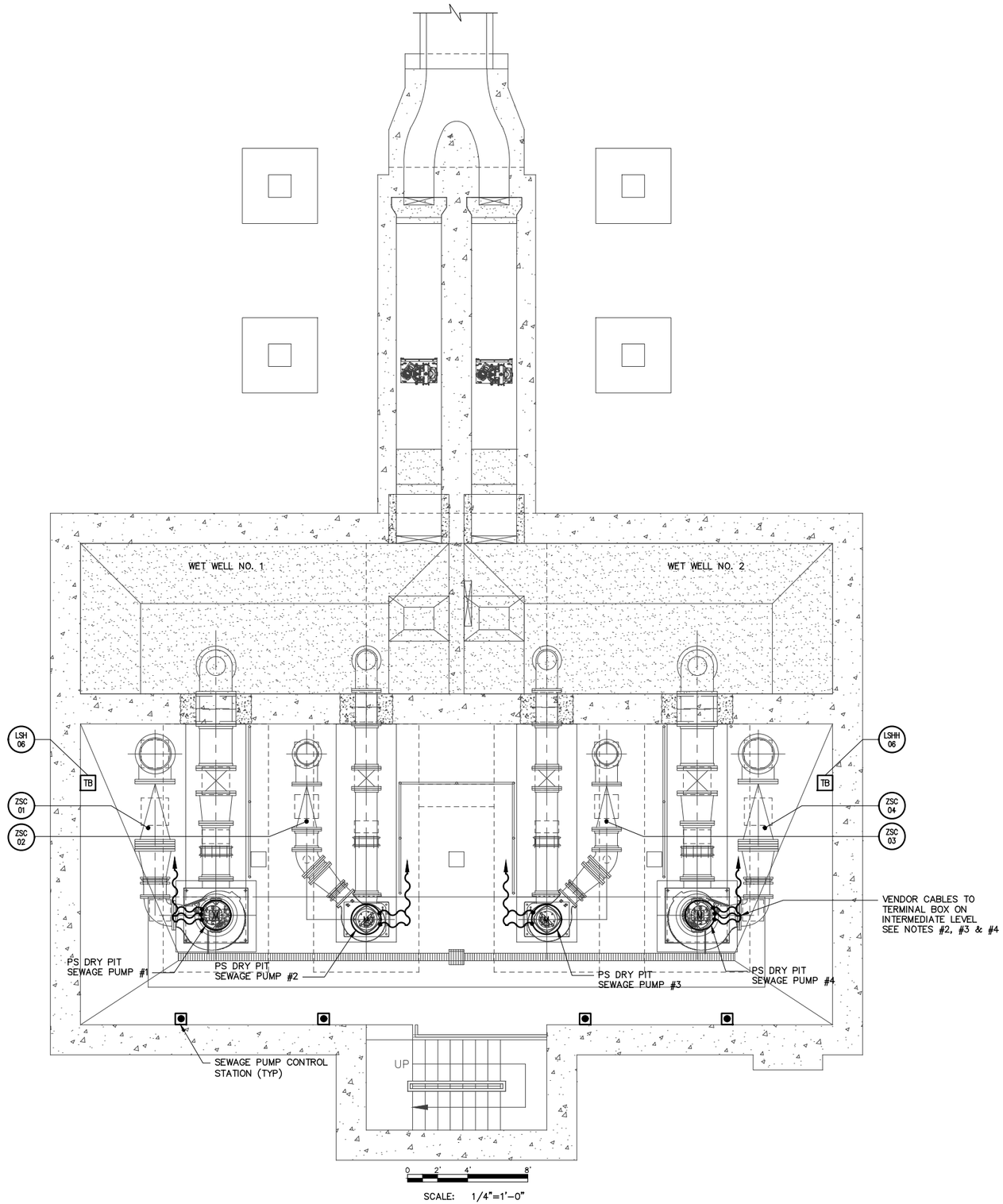

NOTES:

1. THE PUMP STATION IS CONSIDERED A WET AND CORROSIVE LOCATION. ALL MATERIALS, EQUIPMENT, INCIDENTALS, ETC. SHALL CONFORM TO THE REQUIREMENTS OF THE AREA'S CLASSIFICATION.
2. SUPPORT VENDOR SUBMERMISIBLE CABLES USING KELLEMS TYPE SUPPORT GRIPS OR EQUIVALENT MEANS AND ROUTE TO MOTORS AS REQUIRED.
3. CONNECT VENDOR SUBMERSIBLE CABLES TO THE TERMINAL BOXES SHOWN AT THE INTERMEDIATE LEVEL ON DWG E-10. PROVIDE CONDUIT NIPPLE FOR BOTTOM ENTRY INTO BOX AND CABLE TERMINATOR FOR EACH CABLE.
4. THE SUBERMISIBLE CABLE SIZES AND QUANTITIES OF THE SPECIFIED PUMP VENDORS VARIES. COORDINATE THE CABLE REQUIREMENTS WITH THE SUBMITTED PUMPING EQUIPMENT AND ADJUST THE CABLE INSTALLATION ACCORDINGLY AS MAY BE REQUIRED TO SUIT.

Hazen ARCADIS
A JOINT VENTURE

LEGAL ENTITY:
ARCADIS CE, INC.

SEALS

STATE OF NEW YORK · FRANK A. SANTORA · 073450 · LICENSED PROFESSIONAL ENGINEER

NASSAU COUNTY, NEW YORK
DEPARTMENT OF PUBLIC WORKS

LONG BEACH WPCP CONSOLIDATION
PUMP STATION CONVERSION

LONG BEACH WASTEWATER POLLUTION CONTROL PLANT

NO.	DATE	ISSUED FOR	BY

COPYRIGHT: 2017 HAZEN AND SAWYER/ ARCADIS A JOINT VENTURE

DATE: JULY 2020
PROJECT NO.: 00726790.0001
FILE NAME: E-08
DESIGNED BY: S. CURTIS
DRAWN BY: S. CURTIS
CHECKED BY: F. SANTORA

SHEET TITLE

ELECTRICAL

PUMP STATION
BOTTOM PLAN POWER

SCALE:
AS SHOWN

E-08

SHEET 98 OF 112

User: AIYER Spec: DEP VERSION3 File: \\NY03FP01\DATA\WHI_CAD\VOL2\ACAD\PROJ\00726790.0001\SHEETS\E-08.DWG Scale: 1:1 SavedDate: 6/30/2020 Time: 09:45 Plot Date: Iyer, Abhishek; 7/17/2020; 16:37 ; Layout: BLANK

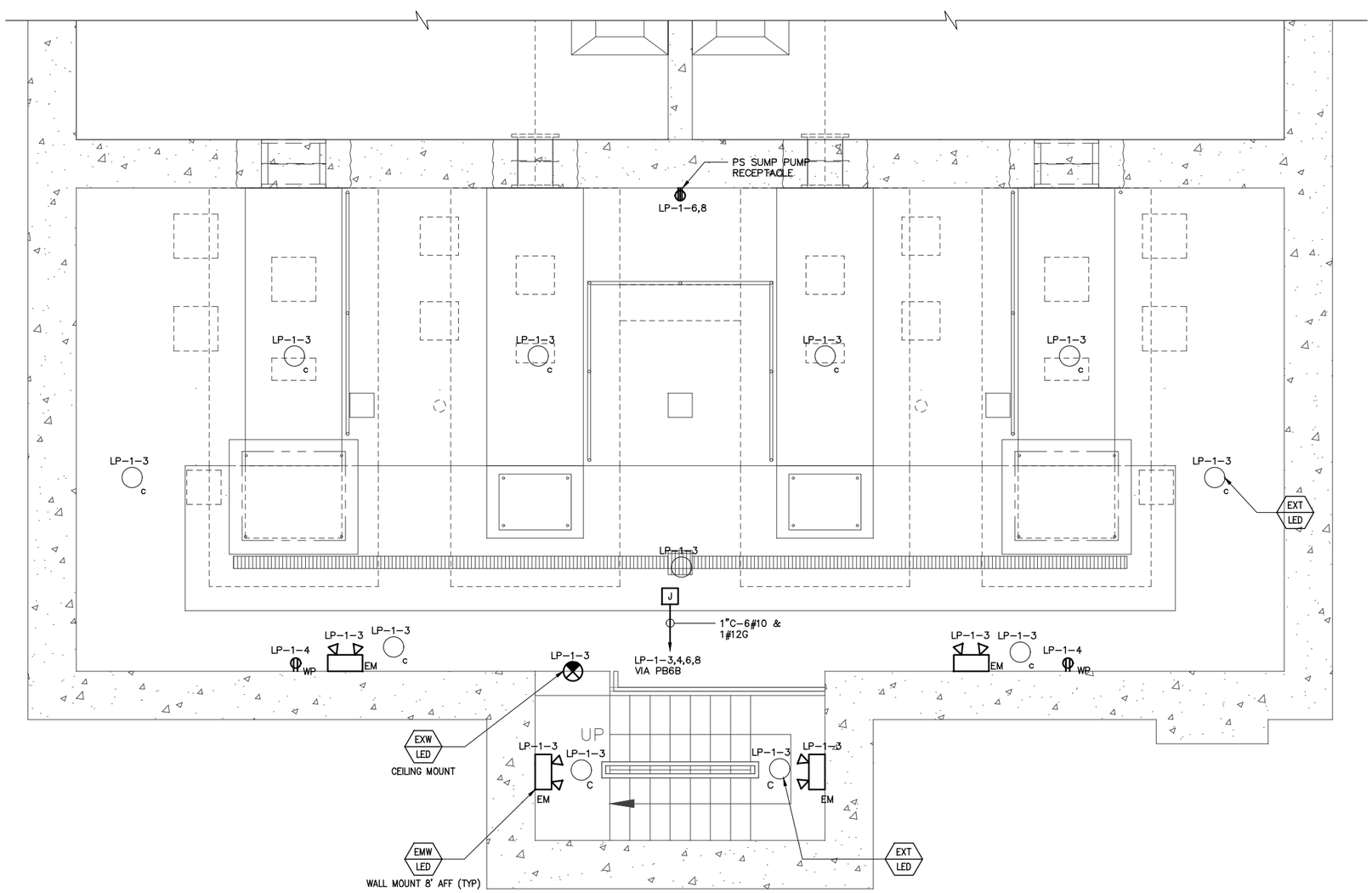

SCALE: 3/8"=1'-0"

NOTES:
1. THE PUMP STATION IS CONSIDERED A WET AND CORROSIVE LOCATION. ALL MATERIALS, EQUIPMENT, INCIDENTALS, ETC. SHALL CONFORM TO THE REQUIREMENTS OF THE AREA'S CLASSIFICATION.

Hazen ARCADIS
A JOINT VENTURE

LEGAL ENTITY:
ARCADIS CE, INC.

SEALS

STATE OF NEW YORK · FRANK A. SANTORA · 073450 · LICENSED PROFESSIONAL ENGINEER

NASSAU COUNTY, NEW YORK
DEPARTMENT OF PUBLIC WORKS

LONG BEACH WPCP CONSOLIDATION
PUMP STATION CONVERSION

LONG BEACH WASTEWATER POLLUTION CONTROL PLANT

NO.	DATE	ISSUED FOR	BY

COPYRIGHT: 2017 HAZEN AND SAWYER/ ARCADIS A JOINT VENTURE

DATE: JULY 2020
PROJECT NO.: 00726790.0001
FILE NAME: E-09
DESIGNED BY: S. CURTIS
DRAWN BY: S. CURTIS
CHECKED BY: F. SANTORA

SHEET TITLE

ELECTRICAL

PUMP STATION BOTTOM PLAN LIGHTING

SCALE: AS SHOWN

E-09

SHEET 99 OF 112

User:AIYER Spec:DEP VERSION3 File:\\NY03FP01\DATA\WHL_CAD\VOL2\ACAD\PROJ\00726790.0001\SHEETS\E-09.DWG Scale:1:1 SavedDate:7/15/2020 Time:14:37 Plot Date: Iyer, Abhishek; 7/17/2020; 16:36 ; Layout:BLANK

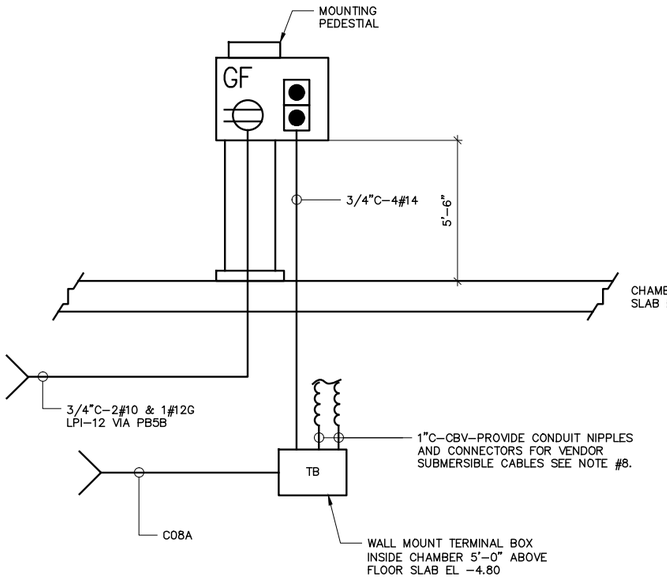

GRINDER/SCREEN DEVICE MOUNTING DETAIL SEE NOTE #7

NTS

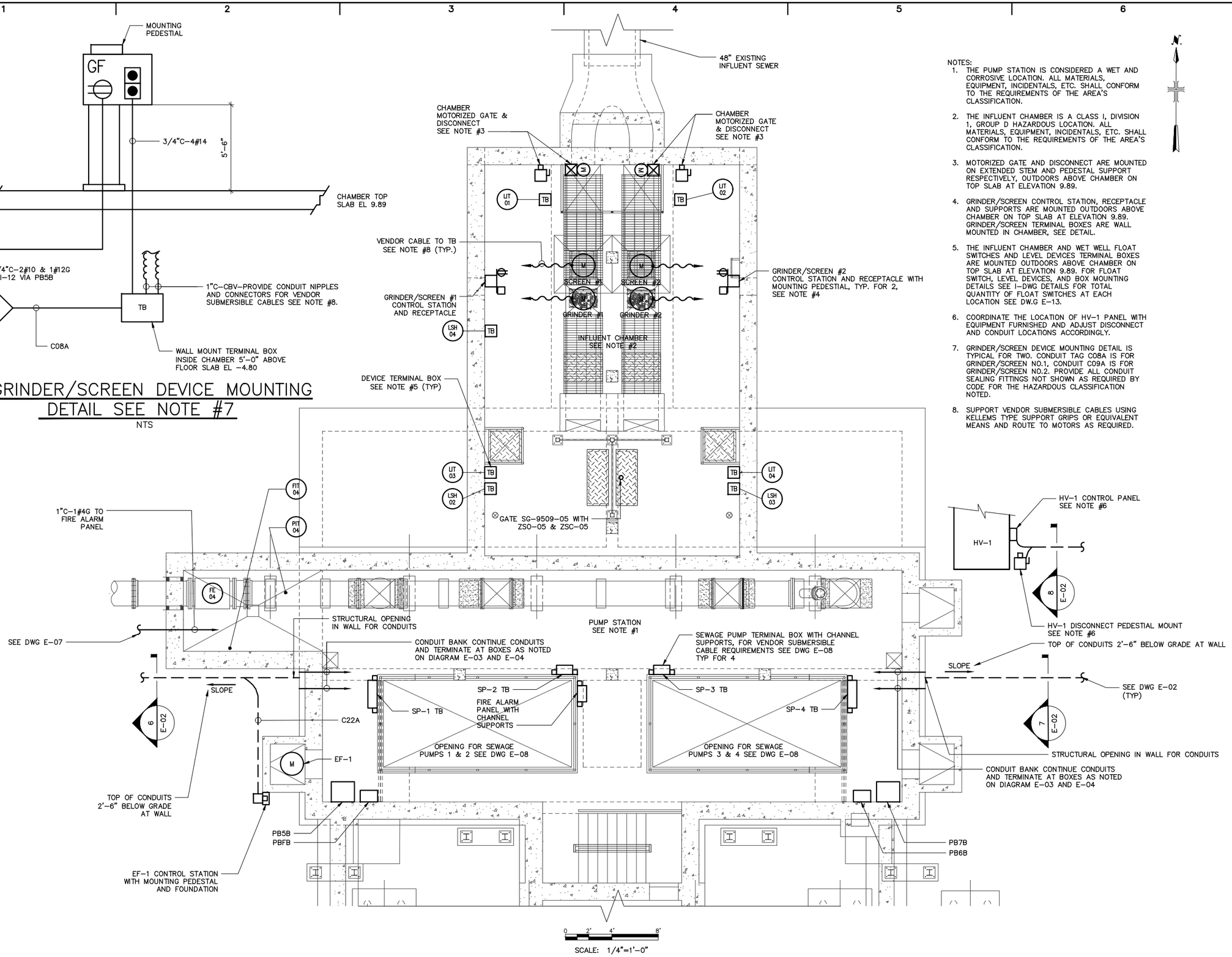

NOTES:

1. THE PUMP STATION IS CONSIDERED A WET AND CORROSIVE LOCATION. ALL MATERIALS, EQUIPMENT, INCIDENTALS, ETC. SHALL CONFORM TO THE REQUIREMENTS OF THE AREA'S CLASSIFICATION.
2. THE INFLUENT CHAMBER IS A CLASS I, DIVISION 1, GROUP D HAZARDOUS LOCATION. ALL MATERIALS, EQUIPMENT, INCIDENTALS, ETC. SHALL CONFORM TO THE REQUIREMENTS OF THE AREA'S CLASSIFICATION.
3. MOTORIZED GATE AND DISCONNECT ARE MOUNTED ON EXTENDED STEM AND PEDESTAL SUPPORT RESPECTIVELY, OUTDOORS ABOVE CHAMBER ON TOP SLAB AT ELEVATION 9.89.
4. GRINDER/SCREEN CONTROL STATION, RECEPTACLE AND SUPPORTS ARE MOUNTED OUTDOORS ABOVE CHAMBER ON TOP SLAB AT ELEVATION 9.89. GRINDER/SCREEN TERMINAL BOXES ARE WALL MOUNTED IN CHAMBER, SEE DETAIL.
5. THE INFLUENT CHAMBER AND WET WELL FLOAT SWITCHES AND LEVEL DEVICES TERMINAL BOXES ARE MOUNTED OUTDOORS ABOVE CHAMBER ON TOP SLAB AT ELEVATION 9.89. FOR FLOAT SWITCH, LEVEL DEVICES, AND BOX MOUNTING DETAILS SEE I-DWG DETAILS FOR TOTAL QUANTITY OF FLOAT SWITCHES AT EACH LOCATION SEE DW.G E-13.
6. COORDINATE THE LOCATION OF HV-1 PANEL WITH EQUIPMENT FURNISHED AND ADJUST DISCONNECT AND CONDUIT LOCATIONS ACCORDINGLY.
7. GRINDER/SCREEN DEVICE MOUNTING DETAIL IS TYPICAL FOR TWO. CONDUIT TAG C08A IS FOR GRINDER/SCREEN NO.1, CONDUIT C09A IS FOR GRINDER/SCREEN NO.2. PROVIDE ALL CONDUIT SEALING FITTINGS NOT SHOWN AS REQUIRED BY CODE FOR THE HAZARDOUS CLASSIFICATION NOTED.
8. SUPPORT VENDOR SUBMERSIBLE CABLES USING KELLEMS TYPE SUPPORT GRIPS OR EQUIVALENT MEANS AND ROUTE TO MOTORS AS REQUIRED.

Hazen ARCADIS
A JOINT VENTURE

LEGAL ENTITY:
ARCADIS CE, INC.

SEALS

NASSAU COUNTY, NEW YORK
DEPARTMENT OF PUBLIC WORKS

LONG BEACH WPCP CONSOLIDATION
PUMP STATION CONVERSION

LONG BEACH WASTEWATER POLLUTION CONTROL PLANT

NO.	DATE	ISSUED FOR	BY

COPYRIGHT: 2017 HAZEN AND SAWYER/ ARCADIS A JOINT VENTURE

DATE:	JULY 2020
PROJECT NO.:	00726790.0001
FILE NAME:	E-10
DESIGNED BY:	S. CURTIS
DRAWN BY:	S. CURTIS
CHECKED BY:	F. SANTORA

SHEET TITLE

ELECTRICAL

PUMP STATION INTERMEDIATE PLAN POWER

SCALE: AS SHOWN

E-10

SHEET 100 OF 112

User: AIYER Spec: DEP VERSION3 File: \\NYO3FP01\DATA\WHI_CAD\VOL2\ACAD\PROJ\00726790.0001\SHEETS\E-10.DWG Scale: 1:1 SavedDate: 7/16/2020 Time: 09:50 Plot Date: Iyer, Abhishek; 7/17/2020; 16:35 ; Layout: BLANK

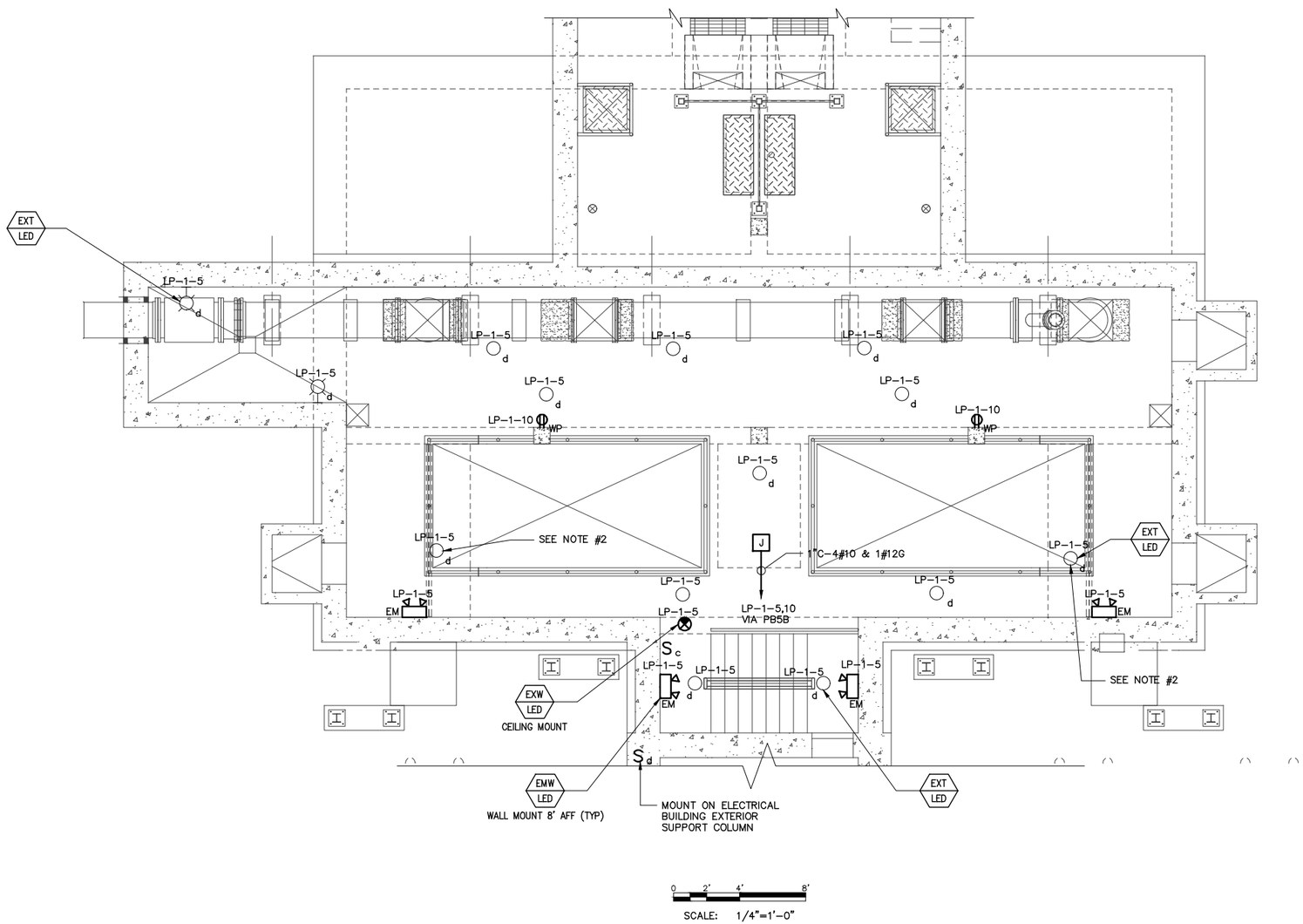

NOTES:
1. THE PUMP STATION IS CONSIDERED A WET AND CORROSIVE LOCATION. ALL MATERIALS, EQUIPMENT, INCIDENTALS, ETC. SHALL CONFORM TO THE REQUIREMENTS OF THE AREA'S CLASSIFICATION.
2. RELOCATE EXISTING FIXTURES NOTED AND ASSOCIATED CONDUITS AS REQUIRED TO CLEAR MODIFIED OPENINGS.

Hazen ARCADIS
A JOINT VENTURE

LEGAL ENTITY:
ARCADIS CE, INC.

SEALS

STATE OF NEW YORK · FRANK A. SANTORA · 073450 · LICENSED PROFESSIONAL ENGINEER

NASSAU COUNTY, NEW YORK
DEPARTMENT OF PUBLIC WORKS

LONG BEACH WPCP CONSOLIDATION
PUMP STATION CONVERSION

LONG BEACH WASTEWATER POLLUTION CONTROL PLANT

NO.	DATE	ISSUED FOR	BY

COPYRIGHT: 2017 HAZEN AND SAWYER/ ARCADIS A JOINT VENTURE

DATE: JULY 2020
PROJECT NO.: 00726790.0001
FILE NAME: E-11
DESIGNED BY: S. CURTIS
DRAWN BY: S. CURTIS
CHECKED BY: F. SANTORA

SHEET TITLE

ELECTRICAL

PUMP STATION
INTERMEDIATE PLAN
LIGHTING

SCALE: AS SHOWN

E-11

SHEET 101 OF 112

User:AIYER Spec:DEP VERSION3 File:\\NYO3FP01\DATA\WHI_CAD\VOL2\ACAD\PROJ\00726790.0001\SHEETS\E-11.DWG Scale:1:1 SavedDate:7/17/2020 Time:17:54 Plot Date: Iyer, Abhishek; 7/20/2020; 11:53 ; Layout:BLANK

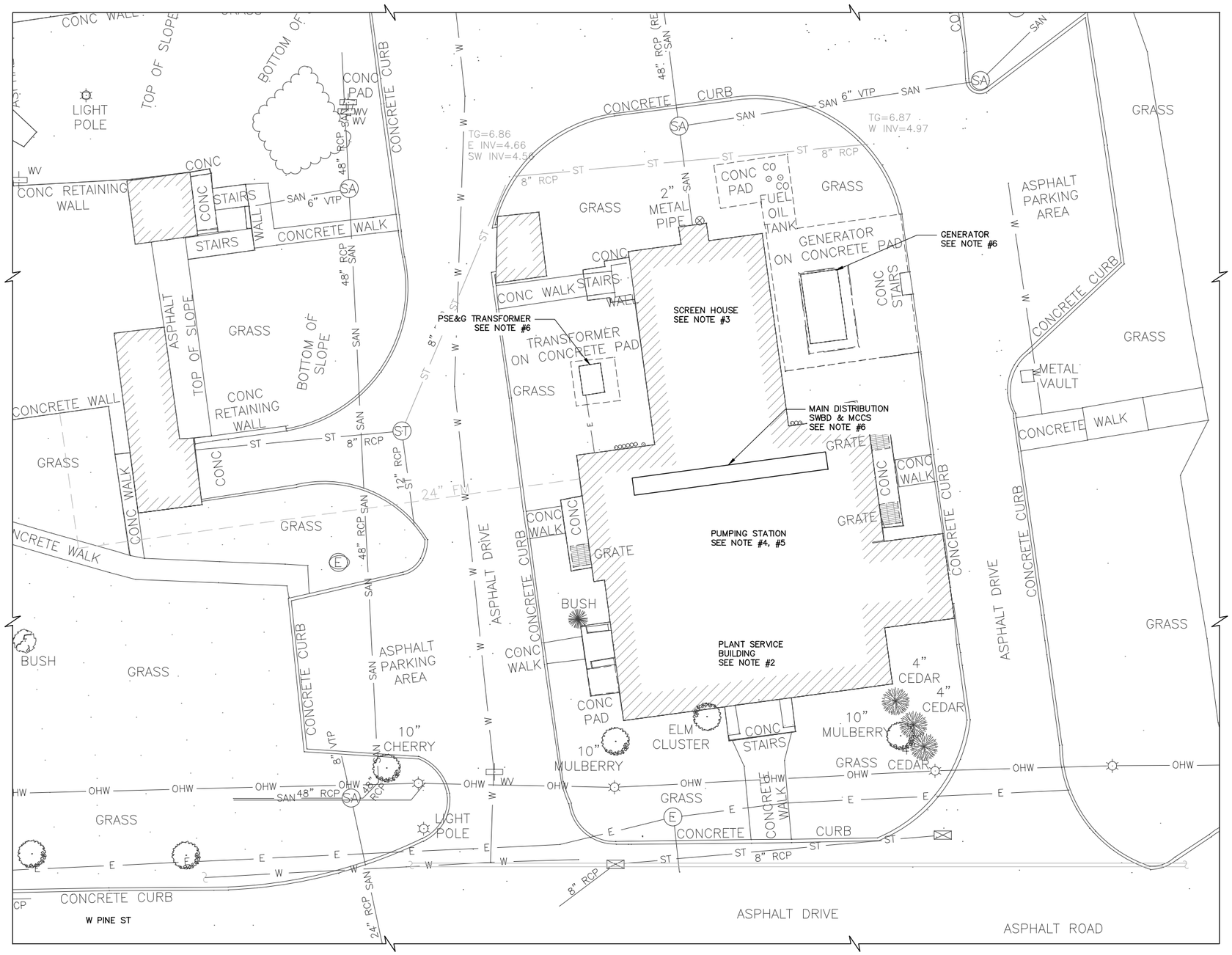

EXISTING SITE PLAN

0 10' 20'

PLANT NORTH

NOTES:

1. PERFORM SELECTIVE DEMOLITION AS DESCRIBED BY AND IN ACCORDANCE WITH SPECIFICATION SECTION 16035 AND TO THE EXTEND AS DESCRIBED BY THE FOLLOWING NOTES.
2. THE PLANT SERVICE BUILDING SHALL BE DEMOLISHED IN ITS ENTIRETY. ALL ELECTRICAL EQUIPMENT AND ASSOCIATED CIRCUITS SHALL BE DISCONNECTED AND DEMOLISHED.
3. THE SCREEN HOUSE STRUCTURE SHALL REMAIN, ALL ELECTRICAL CIRCUITS ASSOCIATED WITH THE SCREENING EQUIPMENT, EXHAUST FANS, LIGHTING AND RECEPTACLES SHALL BE DEMOLISHED.
4. THE PUMP STATION ELECTRICAL EQUIPMENT AND CIRCUIT WIRING ASSOCIATED WITH THE OPERATING LEVEL SHALL REMAIN IN OPERATION. ALL ELECTRICAL CIRCUIT WIRING ASSOCIATED WITH HVAC EQUIPMENT, LIGHTING AND RECEPTACLES AT BOTH THE BOTTOM AND INTERMEDIATE LEVELS SHALL BE DEMOLISHED. THE PUMP STATION PUMPS SHALL BE REPLACED WITH NEW PUMPS AND THE EXISTING PUMPS AND ASSOCIATED ELECTRICAL CIRCUITS SHALL BE DEMOLISHED.
5. REMOVE ALL RECEPTACLES AT THE PUMP STATION BOTTOM AND INTERMEDIATE LEVELS. PROVIDE BLANK COVER PLATES OVER OUTLET BOX OPENINGS.
6. WHEN DIRECTED BY THE ENGINEER, DEMOLISH ALL EQUIPMENT REFERENCED BY THIS NOTE AND ALL CIRCUIT WIRING ON THE PUMP STATION OPERATING LEVEL.

Hazen ARCADIS
A JOINT VENTURE

LEGAL ENTITY:
ARCADIS CE, INC.

SEALS

STATE OF NEW YORK · FRANK A. SANTORA · 073450 · LICENSED PROFESSIONAL ENGINEER

NASSAU COUNTY, NEW YORK
DEPARTMENT OF PUBLIC WORKS

LONG BEACH WPCP CONSOLIDATION
PUMP STATION CONVERSION

LONG BEACH WASTEWATER POLLUTION CONTROL PLANT

NO.	DATE	ISSUED FOR	BY

COPYRIGHT: 2017 HAZEN AND SAWYER/ ARCADIS A JOINT VENTURE

DATE: JULY 2020
PROJECT NO.: 00726790.0001
FILE NAME: E-12
DESIGNED BY: S. CURTIS
DRAWN BY: S. CURTIS
CHECKED BY: F. SANTORA

SHEET TITLE

ELECTRICAL

DEMOLITION PLAN

SCALE: 1"=10'-0"

E-12

SHEET 102 OF 112

User:AYER Spec:DEP VERSION3 File:\\WY03FP01\DATA\WHI_CAD\VOL2\ACAD\PROJ\00726790.0001\SHEETS\E-12.DWG Scale:1:1 SavedDate:6/30/2020 Time:09:41 Plot Date: Iyer, Abhishek; 7/17/2020; 16:32 ; Layout:BLANK

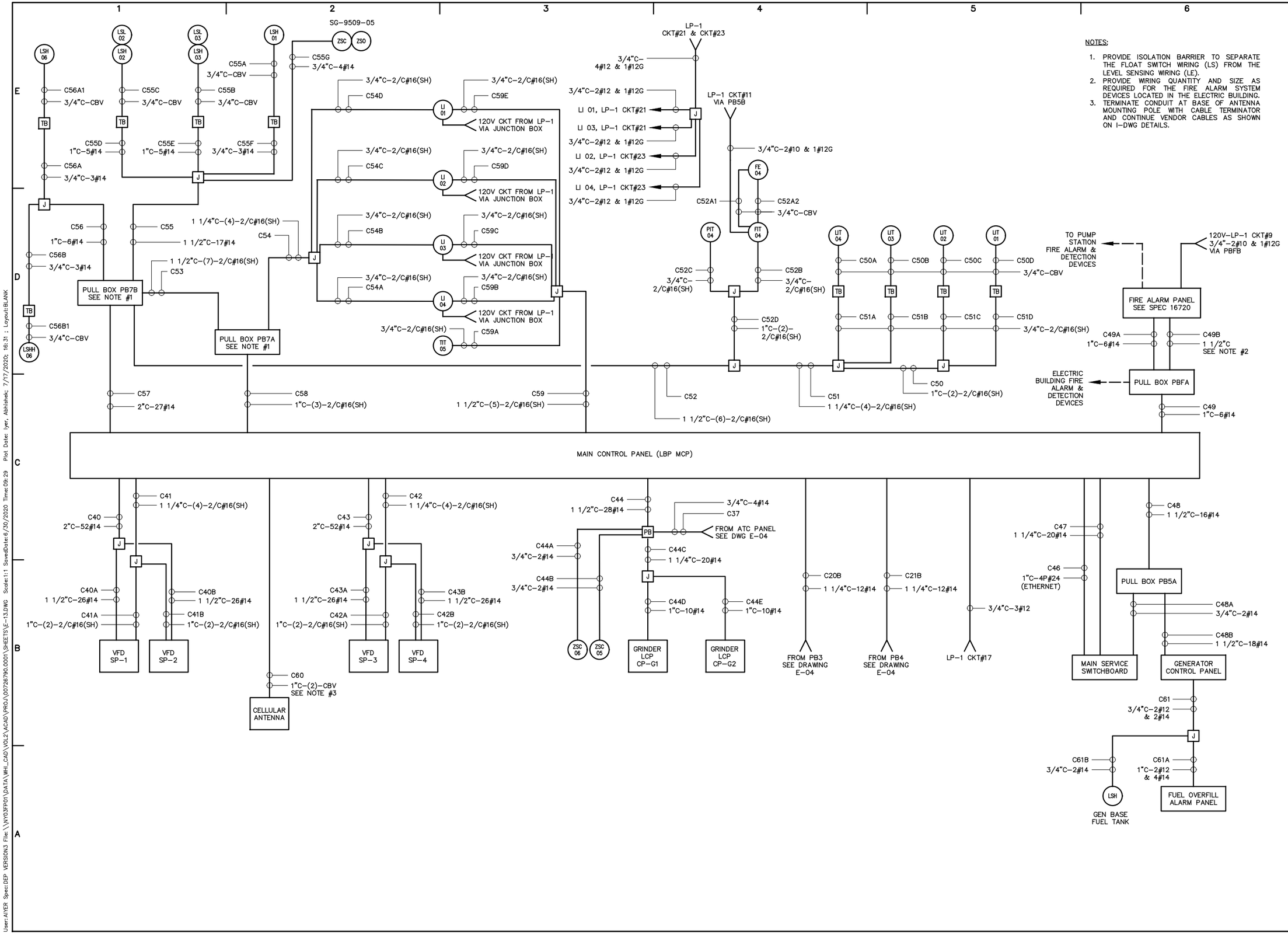

NOTES:

1. PROVIDE ISOLATION BARRIER TO SEPARATE THE FLOAT SWITCH WIRING (LS) FROM THE LEVEL SENSING WIRING (LE).
2. PROVIDE WIRING QUANTITY AND SIZE AS REQUIRED FOR THE FIRE ALARM SYSTEM DEVICES LOCATED IN THE ELECTRIC BUILDING.
3. TERMINATE CONDUIT AT BASE OF ANTENNA MOUNTING POLE WITH CABLE TERMINATOR AND CONTINUE VENDOR CABLES AS SHOWN ON I-DWG DETAILS.

Hazen ARCADIS
A JOINT VENTURE

LEGAL ENTITY:
ARCADIS CE, INC.

SEALS

STATE OF NEW YORK · FRANK A. SANTORA · 073450 · LICENSED PROFESSIONAL ENGINEER

NASSAU COUNTY, NEW YORK
DEPARTMENT OF PUBLIC WORKS

LONG BEACH WPCP
CONSOLIDATION
PUMP STATION CONVERSION

LONG BEACH WASTEWATER
POLLUTION CONTROL PLANT

NO.	DATE	ISSUED FOR	BY

COPYRIGHT: 2017 HAZEN AND SAWYER/
ARCADIS A JOINT VENTURE

DATE:	JULY 2020
PROJECT NO.:	00726790.0001
FILE NAME:	E-13
DESIGNED BY:	S. CURTIS
DRAWN BY:	S. CURTIS
CHECKED BY:	F. SANTORA

SHEET TITLE

ELECTRICAL

BLOCK DIAGRAM

SCALE: NTS

E-13

SHEET 103 OF 112

User:AYER Spec:DEP VERSION3 File:\\NY03FP01\DATA\WH_CAD\VOL2\ACAD\PROJ\00726790.0001\SHEETS\E-13.DWG Scale:1:1 SavedDate:6/30/2020 Time:09:29 Plot Date: Iyer, Abhishek; 7/17/2020; 16:31 ; Layout:BLANK

LIGHTING FIXTURE SCHEDULE

TAG	NOMINAL WATTS	NOMINAL LUMENS	COLOR TEMP.	DISTRIBUTION	VOLTAGE	DESCRIPTION	MANUFACTURER
EXT	13	N/A	N/A	N/A	120–277	EXISTING LIGHT FIXTURE. RE–USE EXISTING LIGHT FIXTURE. REMOVE EXISTING CONDUCTORS AND PROVIDE NEW CONDUCTORS. PROVIDE NEW CONDUIT AND REUSE EXISTING CONDUIT AND INTERCEPT EXISTING CONDUIT AS REQUIRED	N/A
L45	45	6000	5000K	N/A	120–277	LED 4–FOOT LINEAR LIGHT FIXTURE, SUITABLE FOR WET AND CORROSIVE LOCATIONS, NEMA 4X, IP66 RATED, FIBERGLASS HOUSING WITH FROSTED ACRYLIC LENS	HOLOPHANE EMS, COLUMBIA LXEM, OR APPROVED EQUAL
EMD	N/A	300	N/A	N/A	120–277	EMERGENCY LED FIXTURE WITH DUAL LED LAMPS, SUITABLE FOR DAMP LOCATIONS, NICKEL CADMIUM BATTERY BACKUP FOR 90 MIN. OPERATION HEAVY–DUTY, STELL–HOUSING WITH WHITE POWDER COAT FINISH, REMOTE HEAD OPTION SHALL BE AVAILABLE.	HUBBELL DUAL LITE LM SERIES EATON ATLITE RIVAL LED OR APPROVED EQUAL
EMW	N/A	600	N/A	N/A	120–277	EMERGENCY LED FIXTURE WITH DUAL LED LAMPS, SUITABLE FOR WET AND CORROSIVE LOCATIONS, NEMA 4X RATED, NICKEL CADMIUM BATTERY BACKUP FOR 90 MIN. OPERATION POLYCARBONATE HOUSING WITH GASKETS AND CORROSION RESISTANT FINISH, REMOTE HEAD OPTION SHALL BE AVAILABLE.	HUBBELL DUAL LITE DYNAMO DYN SERIES HOLOPHANE DESOTO M90X OR APPROVED EQUAL
EXD	N/A	N/A	N/A	N/A	120–277	INDUSTRIAL LED EXIT SIGN, SINGLE OR DOUBLE FACE WITH RED LETTER AND WHITE FINISH, SUITABLE FOR DAMP LOCATIONS, DIE–CAST ALUMINUM HOUSING WITH NICKEL–CADMIUM BATTERY	HUBBELL DUAL LITE SE SERIES HOLOPHANE MAGELLAN MEX OR APPROVED EQUAL
EXW	N/A	N/A	N/A	N/A	120–277	INDUSTRIAL LED EXIT SIGN, SINGLE OR DOUBLE FACE WITH RED LETTER AND WHITE FINISH, SUITABLE FOR WET AND CORROSIVE, NEMA 4X RATED DIE–CAST ALUMINUM HOUSING WITH NICKEL–CADMIUM BATTERY	HUBBELL DUAL LITE SEWL SERIES HOLOPHANE DELEON DLTLX OR APPROVED EQUAL
W32	32	3000	4000K	N/A	120–277	LED WALL PACK LIGHT FIXTURE SUITABLE FOR WET AND CORROSIVE LOCATION DIE–CAST ALUMINUM HOUSING WITH IMPACT–RESISTANT GLASS LENS, CORROSION RESISTANT PAINTED FINISH PROVIDE MOTION SENSOR	HOLOPHANE WALLPACK LED, HUBBELL PERIMALITER LED WALL PACKS, OR APPROVED EQUAL
P14	14	1585	4000K	N/A	120–277	INDUSTRIAL PENDANT MOUNTED VAPOR PROOF FIXTURE DIE CAST ALUMINUM HOUSING WITH CLEAR CLASS GLOBE. PROVIDE PHOTOCELL FOR CONTROL 120V OPERATION	RAB DESIGN LIGHTING TYPE DVCSX–LED 14 TORK PHOTO CONTROLS CAT #2115

CKT NO.	TRIP AMPS	DESCRIPTION OF LOAD	LOAD KVA	KVA PER PHASE A	KVA PER PHASE B	KVA PER PHASE C	LOAD KVA	DESCRIPTION OF LOAD	TRIP AMPS	CKT NO.
1	20	LTG – ELECTRICAL BUILDING	0.36	0.9			0.54	RECEP – ELECTRICAL BUILDING	20	2
3	20	LTG – PS BOTTOM	0.25		0.6		0.36	RECEP – PS BOTTOM	20	4
5	20	LTG – PS INTERMEDIATE	0.27			0.5	0.25	RECEP – PS SUMP PUMP	20	6
7	20	SPARE PS BOTTOM	0.00	0.3			0.25		2P	8
9	20	PS FIRE ALARM PANEL	0.50		0.5		0.00	RECEP – PS INTERMEDIATE	20	10
11	20	PS FLOW METER	0.50			0.9	0.40	RECEP – CHAMBER	20	12
13	20	SPARE PS INTERM	0.50	0.5			0.00	PS SPARE	20	14
15	20	ATC PANEL	0.50		0.5		0.00	PS SPARE	20	16
17	20	MAIN CONTROL PANEL	0.75			0.8	0.00	PS SPARE	20	18
19	20	LTG – ELECTRICAL BUILDING EXTERIOR	0.12	2.4			2.30	ACCU–1–AC–1	30	20
21	20	LI 01, LI 03	0.10		2.4		2.30		2P	
23	20	LI 02, LI 04	0.10			2.4	2.30	ACCU–2–AC–2	30	24
25	20	LTG – CUPOLA LIGHT FIXTURE AND PHOTOCELL	0.10	2.4			2.30		2P	
27	20	HOIST RECEPTACLES	1.30		3.6		2.30	ACCU–3–AC–3	30	28
			1.30			3.6	2.30		2P	
			1.30	1.3			0.00	SPARE	20	32
33	20	SPARE	0.00		0.0		0.00	SPARE	20	34
35	20	SPARE	0.00			0.0	0.00	SPARE	20	36
37	20	BLANK	0.00	0.0			0.00	BLANK	20	38
39	20	BLANK	0.00		0.0		0.00	BLANK	20	40
41	20	BLANK	0.00			0.0	0.00	BLANK	20	42
LIGHTING PANEL : LP–1 LOCATION :ELECTRICAL BUILDING		TOTAL KVA		7.8	7.6	8.2	SERVICE CHARACTERISTICS: 208/120 VOLT – 3 PHASE – 4 WIRE – 60 HZ PROVIDE 100AF/100AT MAIN BREAKER & SOLID NEUTRAL & GROUND BUS			
		GRAND CONNECTED TOTAL KVA			23.6					

Hazen ARCADIS
A JOINT VENTURE

LEGAL ENTITY:
ARCADIS CE, INC.

SEALS

STATE OF NEW YORK · FRANK A. SANTORA · 073450 · LICENSED PROFESSIONAL ENGINEER

NASSAU COUNTY, NEW YORK
DEPARTMENT OF PUBLIC WORKS

LONG BEACH WPCP CONSOLIDATION
PUMP STATION CONVERSION

LONG BEACH WASTEWATER POLLUTION CONTROL PLANT

NO.	DATE	ISSUED FOR	BY

COPYRIGHT: 2017 HAZEN AND SAWYER/ ARCADIS A JOINT VENTURE

DATE: JULY 2020
PROJECT NO.: 00726790.0001
FILE NAME: E–14
DESIGNED BY: S. CURTIS
DRAWN BY: S. CURTIS
CHECKED BY: F. SANTORA

SHEET TITLE

ELECTRICAL

PANELBOARD AND FIXTURE SCHEDULES

SCALE: NONE

E–14

SHEET 104 OF 112

User: AIYER Spec: DEP VERSION3 File: \\NY03FP01\DATA\WHI_CAD\VOL2\ACAD\PROJ\00726790.0001\SHEETS\E–14.DWG Scale: 1:1 SavedDate: 7/16/2020 Time: 13:46 Plot Date: Iyer, Abhishek; 7/17/2020; 16:28 ; Layout: BLANK

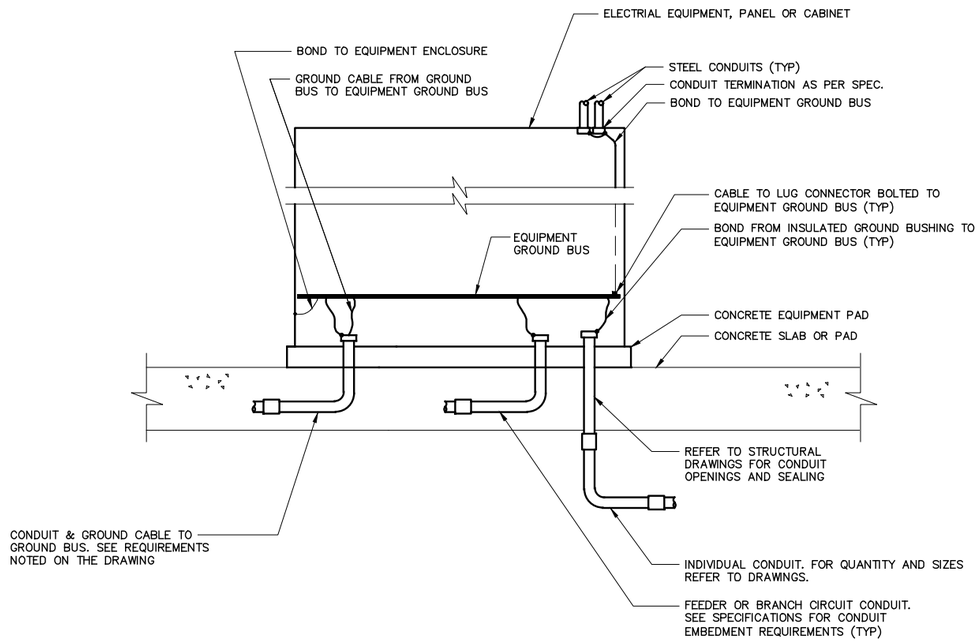

EQUIPMENT GROUNDING DETAIL

TYPE OF CONNECTION	BOLTED OR COMPRESSION		WELDED
	BURNDY CAT#	T&B CAT#	CADWELL CAT#
CABLE TO LUG 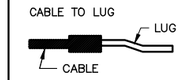	YA	54000 SERIES	LA
CABLE TO ROD 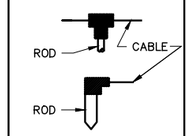	–	53000 SERIES	GT
	GAR	–	GR
CABLE TO CABLE 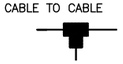	GX	53000 SERIES	TV OR TA
CABLE TO PIPE 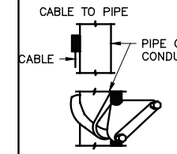	–	–	HA OR VS
	GAR OR GD	3900 SERIES	–
CABLE TO FLAT SURFACE	GB	–	HA OR HS
BRAID TO PIPE 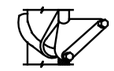	GG	–	–

GROUNDING CONNECTIONS

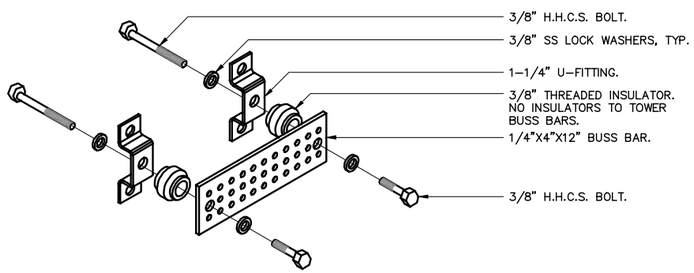

NOTES:

1. CONTRACTOR TO APPLY ANTI–OXIDATION COMPOUND.
2. GROUND BAR SHALL BE SIZED TO ACCOMODATE ALL GROUNDING CONNECTIONS REQUIRED.
3. CLEAN ATTACHMENT POINTS TO REMOVE PAINT.
4. ALL GROUND BARS TO BE TINNED.

GROUND BAR WITH INSULATORS

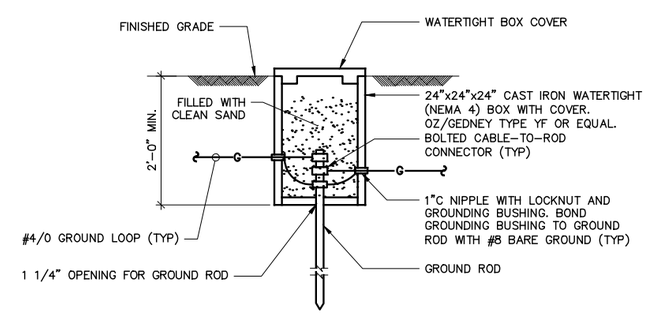

EXTERIOR GROUND TEST POINT

Hazen ARCADIS
A JOINT VENTURE

LEGAL ENTITY:
ARCADIS CE, INC.

SEALS

NASSAU COUNTY, NEW YORK
DEPARTMENT OF PUBLIC WORKS

LONG BEACH WPCP CONSOLIDATION
PUMP STATION CONVERSION

LONG BEACH WASTEWATER POLLUTION CONTROL PLANT

NO.	DATE	ISSUED FOR	BY

COPYRIGHT: 2017 HAZEN AND SAWYER/ ARCADIS A JOINT VENTURE

DATE: JULY 2020
PROJECT NO.: 00726790.0001
FILE NAME: E–15
DESIGNED BY: S. CURTIS
DRAWN BY: S. CURTIS
CHECKED BY: F. SANTORA

SHEET TITLE
ELECTRICAL
ELECTRICAL DETAILS I

SCALE: NONE

E–15
SHEET 105 OF 112

User: AIYER Spec: DEP VERSION3 File: \\NY03FP01\DATA\WHI_CAD\VOL2\ACAD\PROJ\00726790.0001\SHEETS\E-15.DWG Scale: 1:1 SavedDate: 6/30/2020 Time: 09:28 Plot Date: Iyer, Abhishek; 7/17/2020; 16:27 ; Layout: BLANK

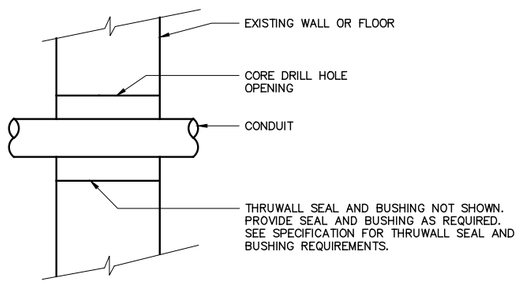

CONDUIT PENETRATION DETAIL

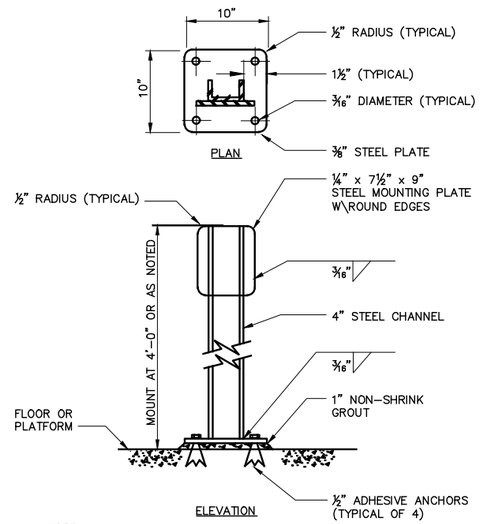

NOTE:

1. USE WASHERS AND SPLIT LOCK-WASHERS UNDER ALL NUTS.

EQUIPMENT MOUNTING PEDESTAL DETAIL

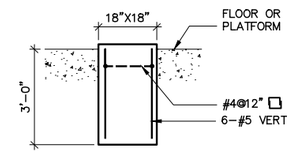

PEDESTAL FOUNDATION DETAIL

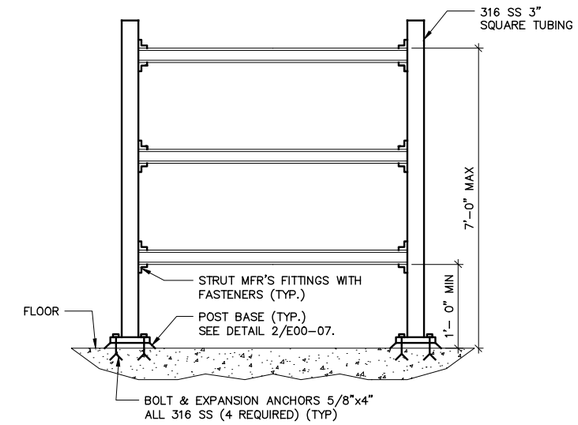

EQUIPMENT SUPPORT RACK DETAIL

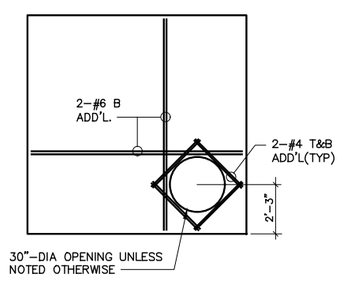

ROOF PLAN

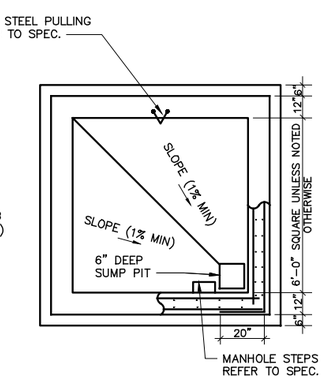

PLAN

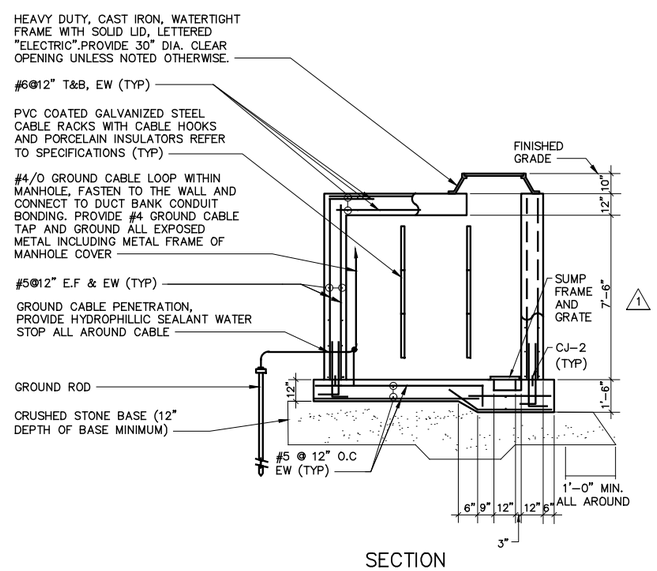

SECTION

NOTES:

1. COORDINATE ALL MANHOLE OPENINGS WITH THE DUCT BANKS ACTUAL CONFIGURATION AND ELEVATION.
2. SLOPE DUCT BANK 3" PER 100' TOWARDS MANHOLE.

TYPICAL MANHOLE DETAIL

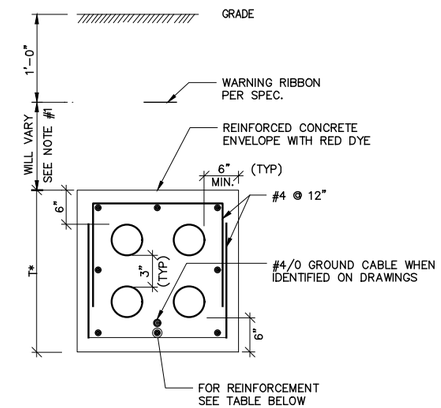

REINFORCEMENT TABLE		
DUCT BANK THICKNESS SEE NOTE #2	UNDER ROADWAY*	AT NON-TRAFFIC AREA
T < 18"	#8 @ 12" (MIN) ALL AROUND	#6 @12" ALL AROUND
T ≥ 18"	#7 @ 12" (MIN) ALL AROUND	#5 @12" ALL AROUND

NOTES:

1. DUCT BANK DIMENSION (1'-0" MINIMUM) VARIES TO CLEAR OTHER UNDERGROUND SYSTEMS AND TO MAINTAIN SLOPE AS REQUIRED.
2. DUCT BANK DEPTH AND WIDTH VARIES, REFER TO PLAN DRAWINGS FOR SIZES.

DUCT BANK SECTION DETAIL

Hazen ARCADIS A JOINT VENTURE

LEGAL ENTITY:
ARCADIS CE, INC.

SEALS

STATE OF NEW YORK · FRANK A. SANTORA · 073450 · LICENSED PROFESSIONAL ENGINEER

NASSAU COUNTY, NEW YORK
DEPARTMENT OF PUBLIC WORKS

LONG BEACH WPCP CONSOLIDATION
PUMP STATION CONVERSION

LONG BEACH WASTEWATER POLLUTION CONTROL PLANT

NO.	DATE	ISSUED FOR	BY

COPYRIGHT: 2017 HAZEN AND SAWYER/ ARCADIS A JOINT VENTURE

DATE: JULY 2020
PROJECT NO.: 00726790.0001
FILE NAME: E-16
DESIGNED BY: S. CURTIS
DRAWN BY: S. CURTIS
CHECKED BY: F. SANTORA

SHEET TITLE
ELECTRICAL
ELECTRICAL DETAILS II

SCALE: NONE

E-16
SHEET 106 OF 112

User:AIYER Spec:DEP VERSION3 File:\\NY03FP01\DATA\WHI_CAD\V0L2\ACAD\PROJ\00726790.0001\SHEETS\E-16.DWG Scale:1:1 SavedDate:6/30/2020 Time:09:27 Plot Date: Iyer, Abhishek; 7/17/2020; 16:26 ; Layout:BLANK

NOTES:

1. MOUNT PULL BOX PBG AND JUNCTION BOX AND ROUTE CONDUITS BELOW PLATFORM ON THE UNDERSIDE OF SLAB. CONTINUE CONDUITS AT AN ELEVATION TIGHT TO BUT CLEARING BEAMS AND TERMINATE AT EQUIPMENT AS NOTED ON DIAGRAMS, DWG E-03 AND E-13. TERMINATE SPARE CONDUIT AT GENERATOR.
2. COORDINATE THE ACTUAL LOCATIONS OF ENCLOSURE EQUIPMENT WITH THE FURNISHED EQUIPMENT.
3. PROVIDE ONE INCH CONDUIT SLEEVES FOR STUB-UPS TO GENERATOR GROUNDING.

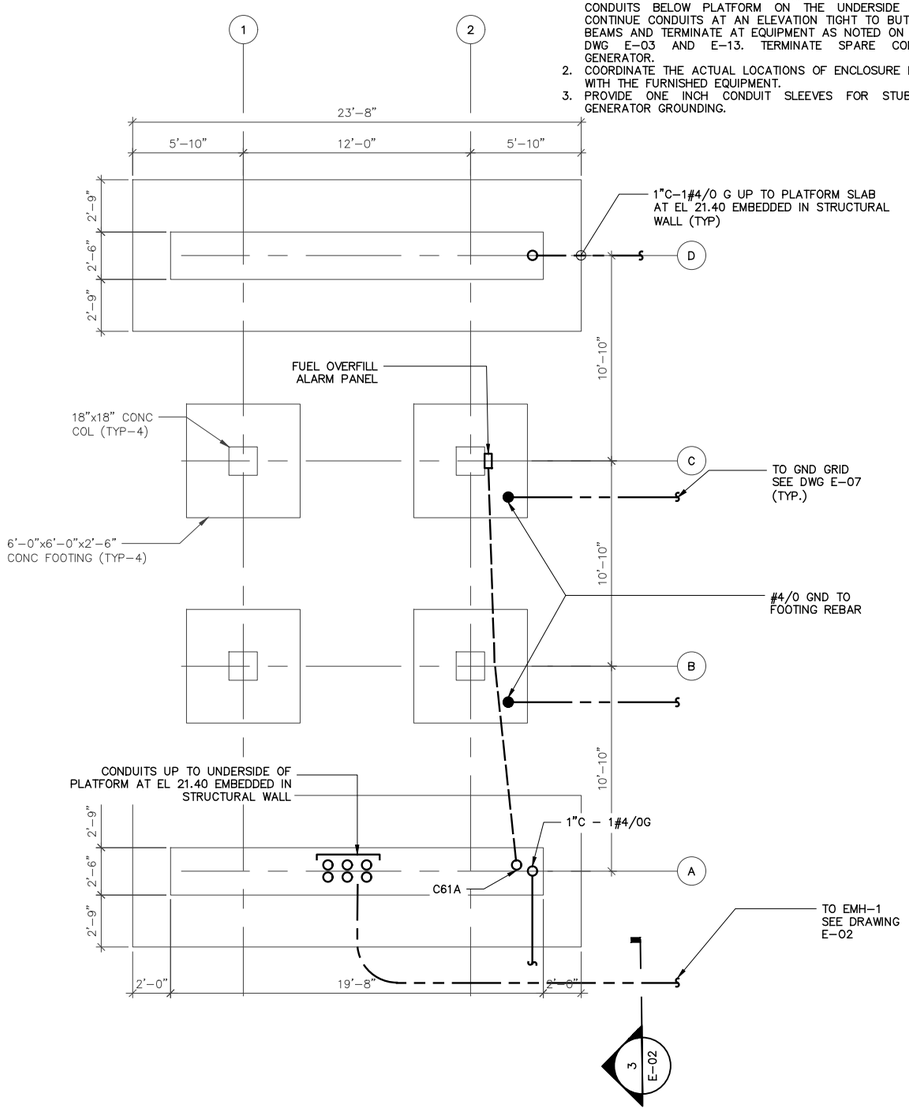

FOUNDATION PLAN AT EL 3.40

SCALE: 1/4" = 1'-0"

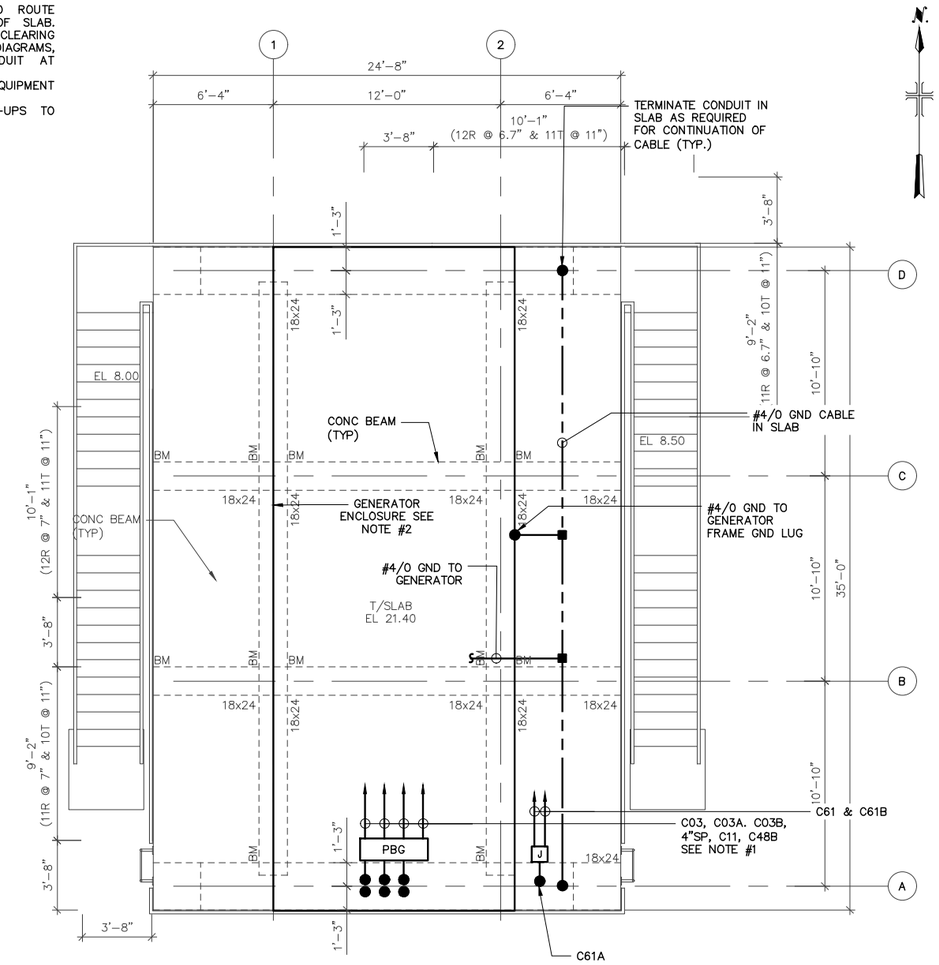

PLATFORM PLAN AT EL 21.40

SCALE: 1/4" = 1'-0"

Hazen ARCADIS
A JOINT VENTURE

LEGAL ENTITY:
ARCADIS CE, INC.

SEALS

STATE OF NEW YORK · FRANK A. SANTORA · 073450 · LICENSED PROFESSIONAL ENGINEER

NASSAU COUNTY, NEW YORK
DEPARTMENT OF PUBLIC WORKS

LONG BEACH WPCP CONSOLIDATION PUMP STATION CONVERSION

LONG BEACH WASTEWATER POLLUTION CONTROL PLANT

NO.	DATE	ISSUED FOR	BY

COPYRIGHT: 2017 HAZEN AND SAWYER/ ARCADIS A JOINT VENTURE

DATE: JULY 2020
PROJECT NO.: 00726790.0001
FILE NAME: E-17
DESIGNED BY: F. SANTORA
DRAWN BY: A. IYER
CHECKED BY: F. SANTORA

SHEET TITLE

ELECTRICAL

GENERATOR PLATFORM CONDUIT DETAILS

SCALE: AS NOTED

E-17

SHEET 107 OF 112

User: AIYER Spec: DEP VERSION3 File: \\NY03FP01\DATA\WHI_CAD\VOL2\ACAD\PROJ\00726790.0001\SHEETS\E-17.DWG Scale: 1:1 SavedDate: 7/16/2020 Time: 13:41 Plot Date: Iyer, Abhishek; 7/17/2020; 16:17 ; Layout: E-17

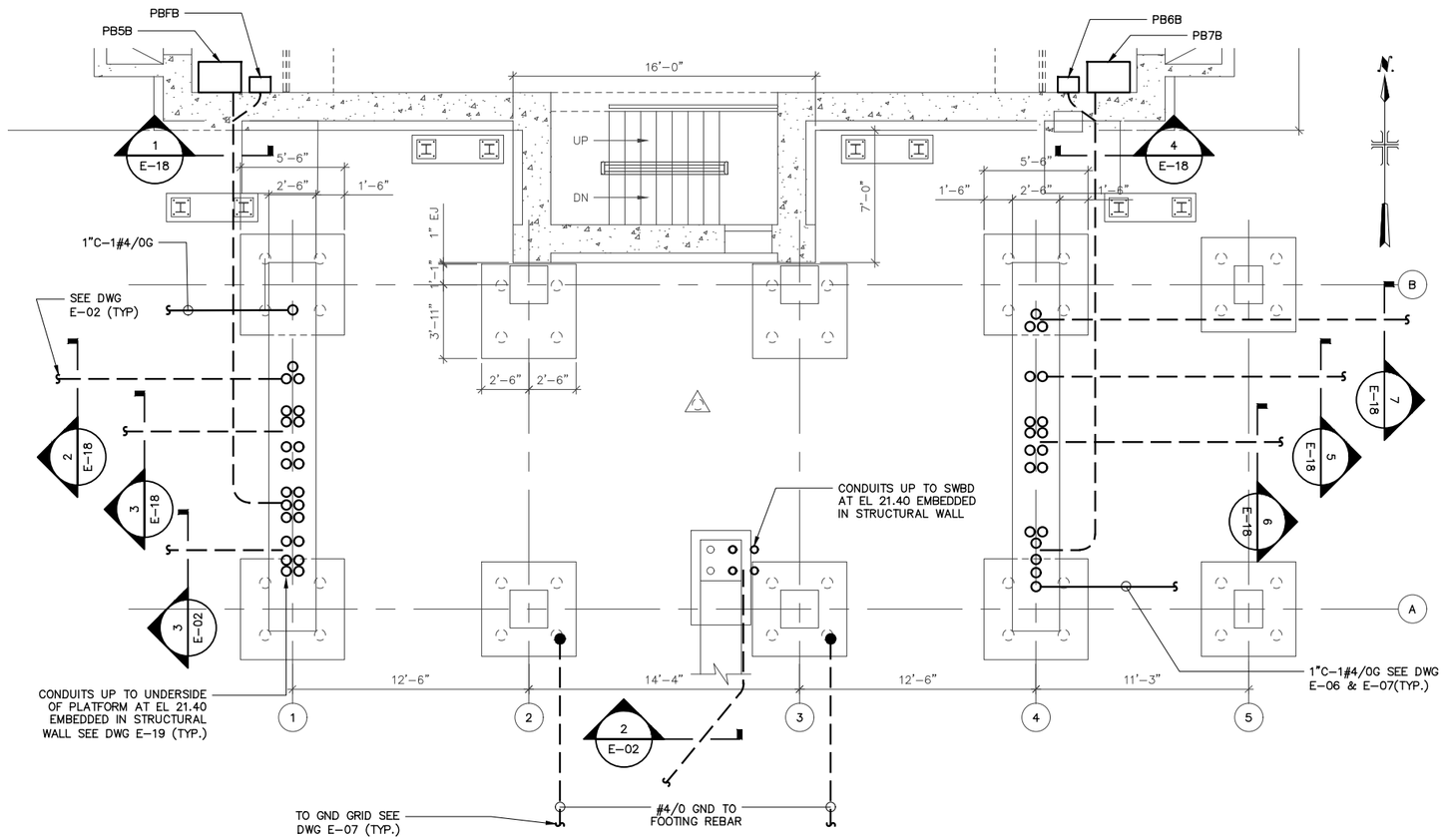

FOUNDATION PLAN AT EL 3.40

SCALE: 1/4" = 1'-0"

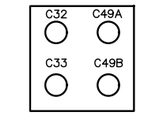

SECTION 1 / E-18
NTS

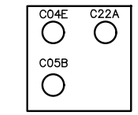

SECTION 2 / E-18
NTS

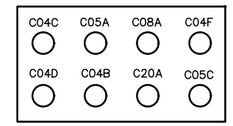

SECTION 3 / E-18
NTS

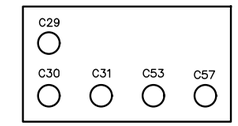

SECTION 4 / E-18
NTS

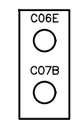

SECTION 5 / E-18
NTS

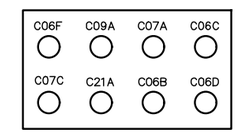

SECTION 6 / E-18
NTS

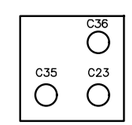

SECTION 7 / E-18
NTS

Hazen ARCADIS
A JOINT VENTURE

LEGAL ENTITY:
ARCADIS CE, INC.

SEALS

NASSAU COUNTY, NEW YORK
DEPARTMENT OF PUBLIC WORKS

LONG BEACH WPCP CONSOLIDATION
PUMP STATION CONVERSION

LONG BEACH WASTEWATER POLLUTION CONTROL PLANT

NO.	DATE	ISSUED FOR	BY

COPYRIGHT: 2017 HAZEN AND SAWYER/ ARCADIS A JOINT VENTURE

DATE: JULY 2020
PROJECT NO.: 00726790.0001
FILE NAME: E-18
DESIGNED BY: F. SANTORA
DRAWN BY: A. IYER
CHECKED BY: F. SANTORA

SHEET TITLE

ELECTRICAL

ELECTRICAL BUILDING FOUNDATION CONDUIT DETAILS

SCALE: 1/4" = 1'-0"

E-18

SHEET 108 OF 112

User: AIYER Spec: DEP VERSION3 File: \\NY03FP01\DATA\WHI_CAD\VOL2\ACAD\PROJ\00726790.0001\SHEETS\E-18.DWG Scale: 1:1 SavedDate: 7/16/2020 Time: 10:02 Plot Date: Iyer, Abhishek; 7/17/2020; 16:18 ; Layout: X

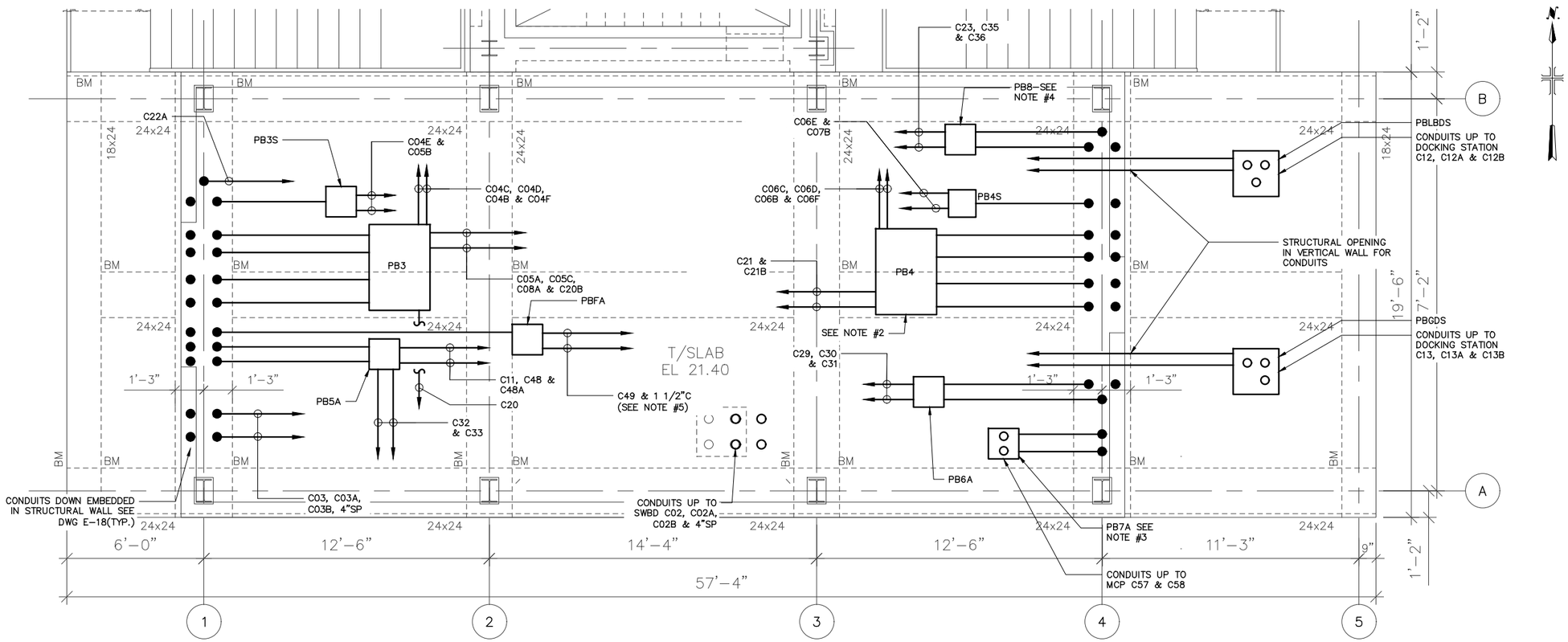

FLOOR PLAN AT EL 21.40 – SEE NOTE #1

SCALE: 3/8" = 1'–0"

NOTES:

1. MOUNT PULL BOXES AND CONDUITS BELOW BUILDING PLATFORM ON THE UNDERSIDE OF SLAB. CONTINUE CONDUITS AT AN ELEVATION TIGHT TO AND CLEARING BEAMS AND TERMINATE AT EQUIPMENT AS NOTED ON DIAGRAM E–03, E–04 AND E–13.
2. CONTINUE CONDUIT C09A FROM PB4, NOT SHOWN TO GRINDER PANEL #2.
3. CONTINUE CONDUIT C54 FROM PB7A NOT SHOWN TO JUNCTION BOX FOR LITS 01 THRU 04.
4. PROVIDE ISOLATION BARRIER TO SEPARATE THE SHIELDED CABLES.
5. CONTINUE CONDUIT UP TO ELECTRIC BUILDING AS REQUIRED FOR THE FIRE ALARM AND DETECTION DEVICES.
6. TERMINATE SPARES AT SWBD.

Hazen ARCADIS
A JOINT VENTURE

LEGAL ENTITY:
ARCADIS CE, INC.

SEALS

STATE OF NEW YORK · FRANK A. SANTORA · 073450 · LICENSED PROFESSIONAL ENGINEER

NASSAU COUNTY, NEW YORK
DEPARTMENT OF PUBLIC WORKS

LONG BEACH WPCP CONSOLIDATION
PUMP STATION CONVERSION

LONG BEACH WASTEWATER POLLUTION CONTROL PLANT

NO.	DATE	ISSUED FOR	BY

COPYRIGHT: 2017 HAZEN AND SAWYER/ ARCADIS A JOINT VENTURE

DATE: JULY 2020
PROJECT NO.: 00726790.0001
FILE NAME: E–19
DESIGNED BY: F. SANTORA
DRAWN BY: A. IYER
CHECKED BY: F. SANTORA

SHEET TITLE

ELECTRICAL

ELECTRICAL BUILDING CONDUIT DETAILS

SCALE: 3/8" = 1'–0"

E–19

SHEET 109 OF 112

User: AIYER Spec: DEP VERSION3 File: \\WY03FP01\DATA\WHI_CAD\VOL2\ACAD\PROJ\00726790.0001\SHEETS\E–19.DWG Scale: 1:1 SavedDate: 6/30/2020 Time: 09:26 Plot Date: Iyer, Abhishek; 7/17/2020; 16:20 ; Layout: X

PRIMARY TANKS AND GRIT COLLECTION LIGHTING AND HEATER CIRCUIT REQUIREMENTS – SEE NOTE #6

1. CIRCUIT #1 – 20A PRIMARY TANK FLOODLIGHT 400 WATT, HPS 120V. PROVIDE CONTROL SWITCH ADJACENT TO LP–1.
2. CIRCUIT #2 – 20A PRIMARY DRAW PIT 2–75 WATT, LED 120V, RETAIN EXISTING LIGHT SWITCH CONTROL.
3. CIRCUIT #3 – 20A PRIMARY DRAW PIT 3600 WATT HEATER 208V.
4. CIRCUIT #4 – 20A WEST GRIT PUMP 1–75 WATT, LED 120V. RETAIN EXISTING LIGHT SWITCH CONTROL.
5. CIRCUIT #5 – 20A EAST GRIT PUMP 1–75 WATT, LED 120V. RETAIN EXISTING LIGHT SWITCH CONTROL.
6. CIRCUIT #6 – 20A GRIT CONVEYOR 2–250 WATT, HPS 120V. RETAIN EXISTING LIGHT SWITCH CONTROL.
7. CIRCUIT #7 – 20A GRIT TANK WALKWAYS 2–75 WATT, LED AND 4–250 WATT, HPS 120 VOLT. RETAIN EXISTING PHOTOCELL CONTROL.

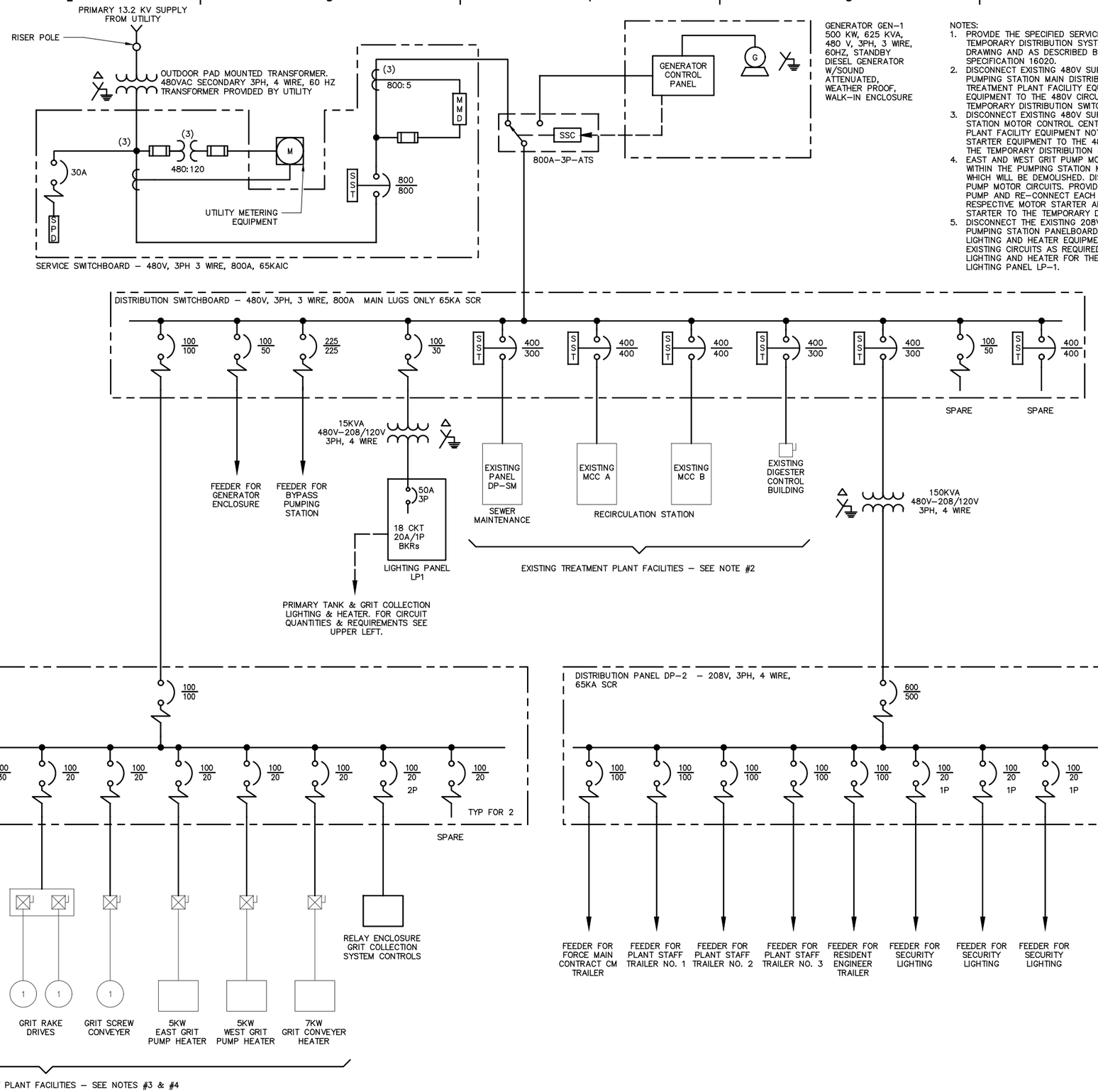

NOTES:

1. PROVIDE THE SPECIFIED SERVICE POINT NO.2 AND TEMPORARY DISTRIBUTION SYSTEM AS PRESENTED ON THIS DRAWING AND AS DESCRIBED BY AND IN ACCORDANCE WITH SPECIFICATION 16020.
2. DISCONNECT EXISTING 480V SUPPLY CIRCUITS AT THE PUMPING STATION MAIN DISTRIBUTION SWITCHBOARD FOR THE TREATMENT PLANT FACILITY EQUIPMENT NOTED. RE–CONNECT EQUIPMENT TO THE 480V CIRCUITS SHOWN FROM THE TEMPORARY DISTRIBUTION SWITCHBOARD.
3. DISCONNECT EXISTING 480V SUPPLY CIRCUITS AT THE PUMP STATION MOTOR CONTROL CENTERS FOR THE TREATMENT PLANT FACILITY EQUIPMENT NOTED. RE–CONNECT THE MOTOR STARTER EQUIPMENT TO THE 480V CIRCUITS SHOWN FROM THE TEMPORARY DISTRIBUTION PANEL DP–1.
4. EAST AND WEST GRIT PUMP MOTOR STARTERS ARE LOCATED WITHIN THE PUMPING STATION MOTOR CONTROL CENTER WHICH WILL BE DEMOLISHED. DISCONNECT EXISTING 480V PUMP MOTOR CIRCUITS. PROVIDE MOTOR STARTERS FOR EACH PUMP AND RE–CONNECT EACH PUMP MOTOR TO ITS RESPECTIVE MOTOR STARTER AND CONNECT EACH MOTOR STARTER TO THE TEMPORARY DISTRIBUTION PANEL DP–1.
5. DISCONNECT THE EXISTING 208V AND 120V CIRCUITS AT THE PUMPING STATION PANELBOARD FOR THE TREATMENT PLANT LIGHTING AND HEATER EQUIPMENT NOTED. INTERCEPT THE EXISTING CIRCUITS AS REQUIRED AND RE–CONNECT THE LIGHTING AND HEATER FOR THE SUPPLY FROM TEMPORARY LIGHTING PANEL LP–1.

Hazen ARCADIS
A JOINT VENTURE

LEGAL ENTITY:
ARCADIS CE, INC.

SEALS

STATE OF NEW YORK · FRANK A. SANTORA · 073450 · LICENSED PROFESSIONAL ENGINEER

NASSAU COUNTY, NEW YORK
DEPARTMENT OF PUBLIC WORKS

LONG BEACH WPCP CONSOLIDATION
PUMP STATION CONVERSION

LONG BEACH WASTEWATER POLLUTION CONTROL PLANT

NO.	DATE	ISSUED FOR	BY

COPYRIGHT: 2017 HAZEN AND SAWYER/ ARCADIS A JOINT VENTURE

DATE: JULY 2020
PROJECT NO.: 00726790.0001
FILE NAME: E–20
DESIGNED BY: S. CURTIS
DRAWN BY: S. CURTIS
CHECKED BY: F. SANTORA

SHEET TITLE

ELECTRICAL

TEMPORARY DISTRIBUTION SYSTEM DIAGRAM

SCALE: NTS

E–20

SHEET 110 OF 112

User: AIYER Spec: DEP VERSION3 File: \\NY03FP01\DATA\WHI_CAD\VOL2\ACAD\PROJ\00726790.0001\SHEETS\E–20.DWG Scale: 1:1 SavedDate: 6/30/2020 Time: 09:26 Plot Date: Iyer, Abhishek; 7/17/2020; 16:21 ; Layout: BLANK

NOTES:

1. PROVIDE TEMPORARY ELECTRICAL SYSTEMS AS DESCRIBED BY AND IN ACCORDANCE WITH SPECIFICATION SECTION 16020
2. FOR LOCATIONS OF THE BYPASS PUMPING STATION, OWNER'S TEMPORARY FACILITIES AND CONTRACTOR STAGING AREA SEE CIVIL DRAWING C-03.

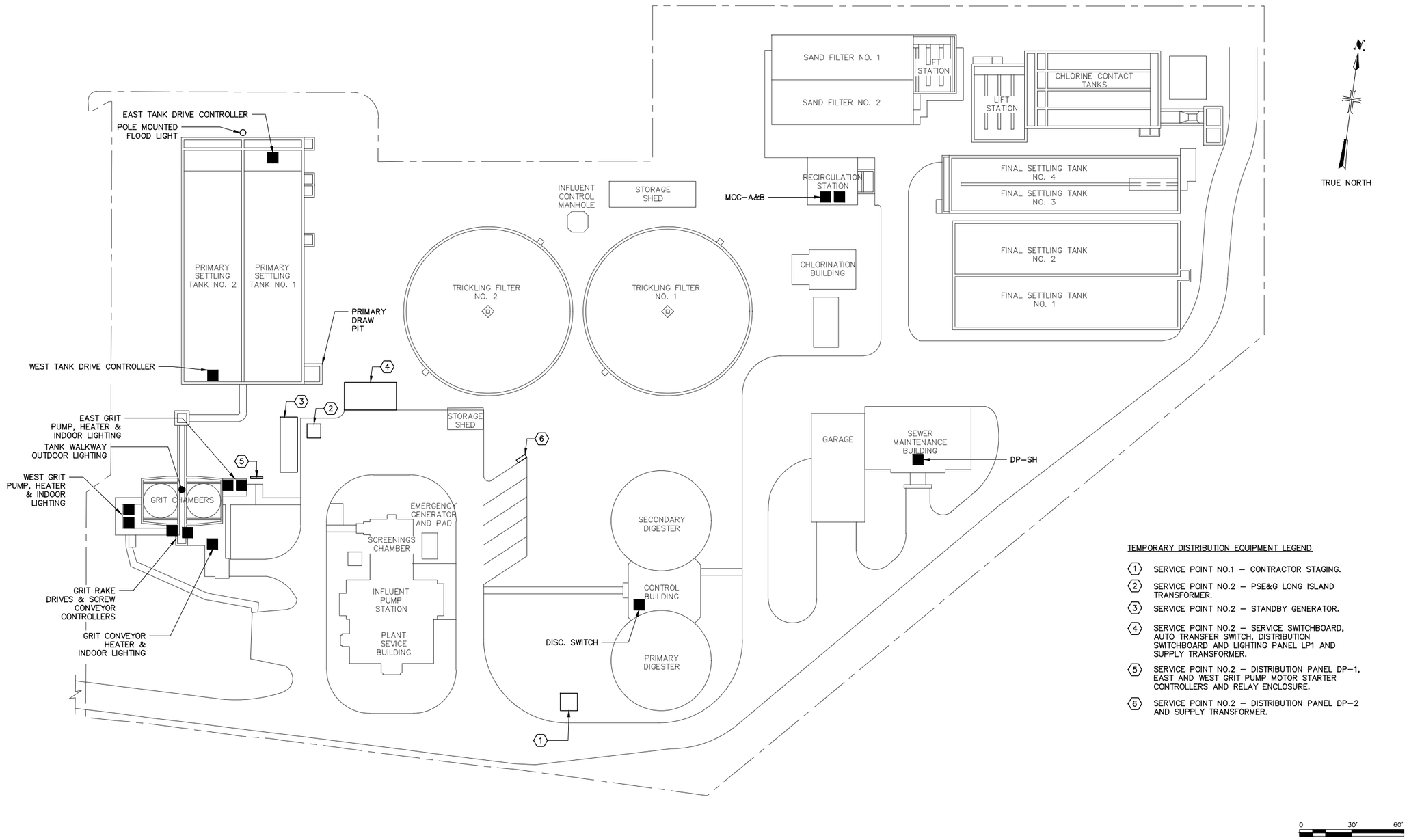

TEMPORARY DISTRIBUTION EQUIPMENT LEGEND

1. SERVICE POINT NO.1 – CONTRACTOR STAGING.
2. SERVICE POINT NO.2 – PSE&G LONG ISLAND TRANSFORMER.
3. SERVICE POINT NO.2 – STANDBY GENERATOR.
4. SERVICE POINT NO.2 – SERVICE SWITCHBOARD, AUTO TRANSFER SWITCH, DISTRIBUTION SWITCHBOARD AND LIGHTING PANEL LP1 AND SUPPLY TRANSFORMER.
5. SERVICE POINT NO.2 – DISTRIBUTION PANEL DP-1, EAST AND WEST GRIT PUMP MOTOR STARTER CONTROLLERS AND RELAY ENCLOSURE.
6. SERVICE POINT NO.2 – DISTRIBUTION PANEL DP-2 AND SUPPLY TRANSFORMER.

Hazen ARCADIS
A JOINT VENTURE

LEGAL ENTITY:
ARCADIS CE, INC.

SEALS

STATE OF NEW YORK · FRANK A. SANTORA · 073450 · LICENSED PROFESSIONAL ENGINEER

NASSAU COUNTY, NEW YORK
DEPARTMENT OF PUBLIC WORKS

LONG BEACH WPCP CONSOLIDATION
PUMP STATION CONVERSION

LONG BEACH WASTEWATER POLLUTION CONTROL PLANT

NO.	DATE	ISSUED FOR	BY

COPYRIGHT: 2017 HAZEN AND SAWYER/ ARCADIS A JOINT VENTURE

DATE: JULY 2020
PROJECT NO.: 00726790.0001
FILE NAME: E-21
DESIGNED BY: F. SANTORA
DRAWN BY: A. IYER
CHECKED BY: F. SANTORA

SHEET TITLE

ELECTRICAL

EXISTING SITE PLAN TEMPORARY ELECTRICAL SYSTEMS

SCALE: 1"=30'-0"

E-21

SHEET 111 OF 112

User:AIYER Spec:DEP VERSION3 File:\\NYO3FP01\DATA\WHI_CAD\VOL2\ACAD\PROJ\00726790.0001\SHEETS\E-21.DWG Scale:1:1 SavedDate:6/30/2020 Time:09:25 Plot Date: Iyer, Abhishek; 7/17/2020; 16:24 ; Layout:E-21

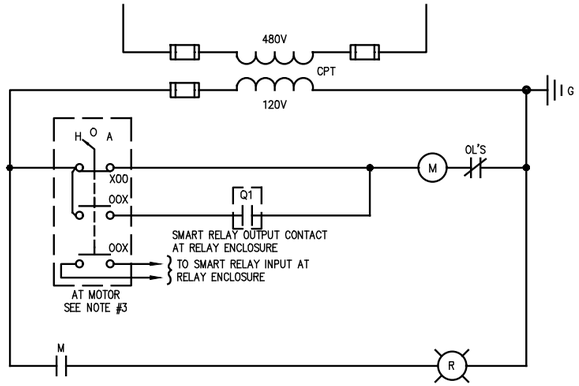

GRIT PUMP CONTROLS

(TYPICAL FOR 2, EAST AND WEST)
SEE NOTE #2

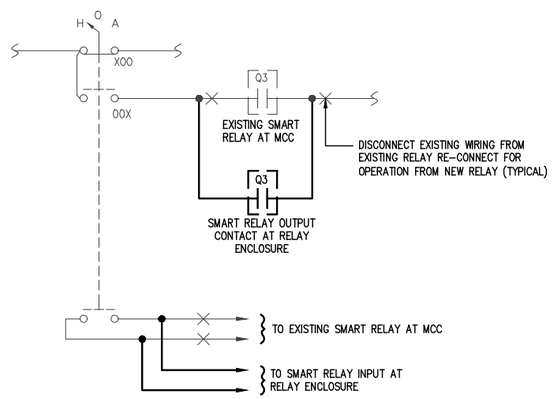

EXISTING GRIT SCREW CONVEYOR STARTER MODIFICATIONS

SEE NOTES #2 & #4

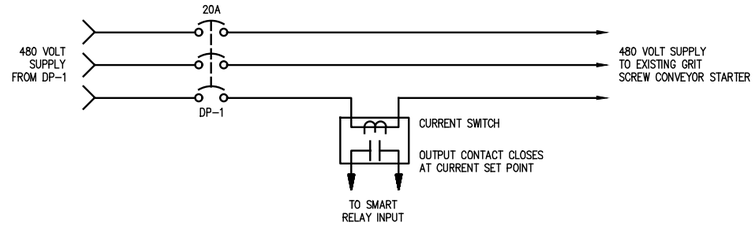

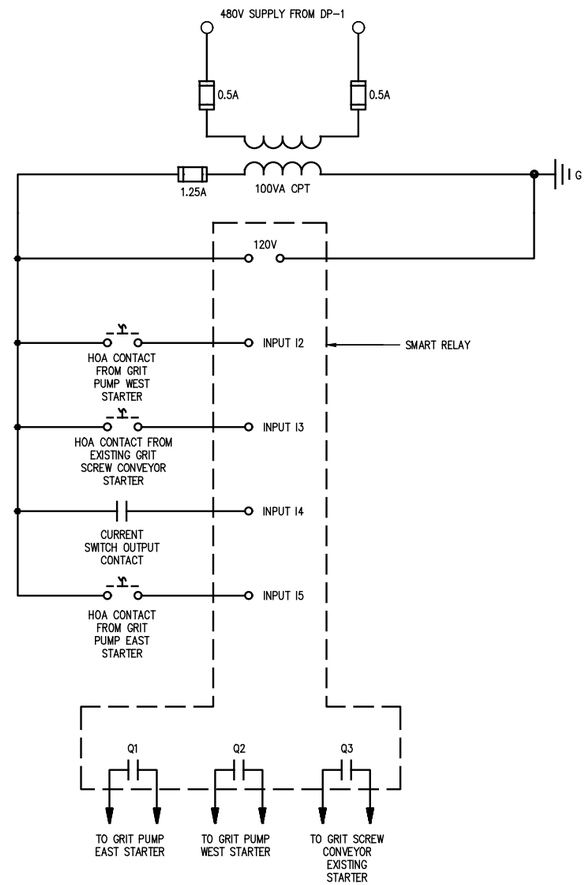

GRIT COLLECTION SYSTEM CONTROLS

SEE NOTE #5

NOTES:

1. PROVIDE THE TEMPORARY GRIT COLLECTION SYSTEM CONTROLS AS PRESENTED ON THIS DRAWING AND AS DESCRIBED BY AND IN ACCORDANCE WITH SPECIFICATION SECTION 16020.
2. UNLESS NOTED OTHERWISE, DEVICES SHOWN ARE LOCATED ON THE MOTOR STARTERS. PROVIDE ALL CONDUIT AND WIRING AS REQUIRED FOR OPERATION WITH THE RELAY ENCLOSURE CONTROLS.
3. DISCONNECT AND REMOVE EXISTING CONTROL STATION LOCATED AT EACH GRIT PUMP MOTOR. PROVIDE CONTROL STATION FUNCTIONALITY SHOWN AND LOCATE STATION NEAR EACH MOTOR. PROVIDE ALL CONDUIT AND WIRING AS REQUIRED FOR OPERATION WITH THE MOTOR STARTERS AND RELAY ENCLOSURE CONTROLS.
4. MODIFY THE EXISTING GRIT SCREW CONVEYOR MOTOR STARTER CONTROLS SHOWN FOR OPERATION WITH THE NEW SMART RELAY.
5. UNLESS NOTED OTHERWISE, DEVICES SHOWN ARE LOCATED IN THE RELAY ENCLOSURE. PROVIDE ALL CONDUIT AND WIRING AS REQUIRED FOR THE CONTROL CIRCUITRY SHOWN.

Hazen ARCADIS
A JOINT VENTURE

LEGAL ENTITY:
ARCADIS CE, INC.

SEALS

NASSAU COUNTY, NEW YORK
DEPARTMENT OF PUBLIC WORKS

LONG BEACH WPCP CONSOLIDATION
PUMP STATION CONVERSION

LONG BEACH WASTEWATER POLLUTION CONTROL PLANT

NO.	DATE	ISSUED FOR	BY

COPYRIGHT: 2017 HAZEN AND SAWYER/ ARCADIS A JOINT VENTURE

DATE: JULY 2020
PROJECT NO.: 00726790.0001
FILE NAME: E-22
DESIGNED BY: F. SANTORA
DRAWN BY: A. IYER
CHECKED BY: F. SANTORA

SHEET TITLE

ELECTRICAL

TEMPORARY GRIT COLLECTION SYSTEM CONTROLS

SCALE: NONE

E-22

SHEET 112 OF 112

User: AIYER Spec: DEP VERSION3 File: \\NYO3FP01\DATA\WHI_CAD\VOL2\ACAD\PROJ\00726790.0001\SHEETS\E-22.DWG Scale: 1:1 SavedDate: 6/30/2020 Time: 11:08 Plot Date: Iyer, Abhishek; 7/17/2020; 16:23 ; Layout: E-21

LONG BEACH WPCP CONSOLIDATION

FORCE MAIN

DEPARTMENT OF PUBLIC WORKS
NASSAU COUNTY, NEW YORK

LONG BEACH WPCP CONSOLIDATION FORCE MAIN

JUNE 2020

CONTRACT NO. S35109-01S

30% SUBMITTAL

PROJECT AREA MAP

NOT TO SCALE

LOCATION MAP

NOT TO SCALE

RECOMMENDED FOR APPROVAL

EDWARD F. VISONE, P.E.
ASSISTANT SUPERINTENDENT OF SANITARY CONSTRUCTION

DATE

VINCENT FALKOWSKI, P.E.
DEPUTY COMMISSIONER OF ENVIRONMENTAL PROGRAMS

DATE

APPROVED BY

KENNETH G. ARNOLD, P.E.
COMMISSIONER OF PUBLIC WORKS

DATE

Hazen ARCADIS
A JOINT VENTURE

SHEET NO.	DRAWING NO.	SHEET TITLE
GENERAL		
1		TITLE SHEET
2	G-001	DRAWING INDEX
3	G-002	GENERAL NOTES, LEGEND, AND ABBREVIATIONS
CIVIL		
4	C-001	KEY PLANS
5	C-002	HDD DRIVE 1 - PLAN AND PROFILE
6	C-003	HDD DRIVE 2 - PLAN AND PROFILE
7	C-004	HDD DRIVE 3 - PLAN AND PROFILE
* 8	C-005	EROSION AND SEDIMENT CONTROL PHASING PLAN - PHASE I
* 9	C-006	EROSION AND SEDIMENT CONTROL PHASING PLAN - PHASE II
* 10	C-007	EROSION AND SEDIMENT CONTROL PHASING PLAN - PHASE III
11	C-008	STAGING AND ACCESS PLAN - HDD DRIVE 1
12	C-009	STAGING AND ACCESS PLAN - HDD DRIVE 2
13	C-010	STAGING AND ACCESS PLAN - PEARSALLS HASSOCKS
14	C-011	STAGING AND ACCESS PLAN - HDD DRIVE 3
15	C-012	HDD CONNECTION INSETS AND PROFILES
16	C-101	LONG BEACH UTILITY RELOCATIONS - PLAN VIEWS
* 17	C-102	LONG BEACH UTILITY RELOCATIONS - PROFILES
18	C-103	FORCE MAIN PLAN AND PROFILE - SHEET 1
19	C-104	FORCE MAIN PLAN AND PROFILE - SHEET 2
20	C-105	FORCE MAIN PLAN AND PROFILE - SHEET 3
21	C-106	FORCE MAIN PLAN AND PROFILE - SHEET 4
22	C-107	FORCE MAIN PLAN AND PROFILE - SHEET 5
23	C-108	FORCE MAIN PLAN AND PROFILE - SHEET 6
24	C-109	FORCE MAIN PLAN AND PROFILE - SHEET 7
25	C-110	FORCE MAIN PLAN AND PROFILE - SHEET 8
26	C-111	FORCE MAIN PLAN AND PROFILE - SHEET 9
27	C-112	FORCE MAIN PLAN AND PROFILE - SHEET 10
28	C-113	FORCE MAIN PLAN AND PROFILE - SHEET 11
29	C-114	FORCE MAIN PLAN AND PROFILE - SHEET 12
* 30	C-200	FINAL SITE PLAN - LONG BEACH
* 31	C-201	FINAL SITE PLAN - BAY PARK 1
* 32	C-202	FINAL SITE PLAN - BAY PARK 2
* 33	C-203	FINAL SITE PLAN - BAY PARK 3
* 34	C-204	FINAL SITE PLAN - BAY PARK 4
* 35	C-205	FINAL SITE PLAN - BAY PARK 5
36	CD-001	EROSION AND SEDIMENT CONTROL DETAILS AND NOTES
* 37	CD-002	EROSION AND SEDIMENT CONTROL DETAILS
38	CD-003	SITE DETAILS AND NOTES - SHEET 1
* 39	CD-004	SITE DETAILS AND NOTES - SHEET 2
40	CD-005	FORCE MAIN DETAILS - SHEET 1
* 41	CD-006	FORCE MAIN DETAILS - SHEET 2
* 42	CT-001	TRAFFIC CONTROL - NOTES
* 43	CT-002	TRAFFIC CONTROL - SHEET 1
* 44	CT-003	TRAFFIC CONTROL - SHEET 2
* 45	CT-004	TRAFFIC CONTROL - SHEET 3
* 46	CT-005	TRAFFIC CONTROL - SHEET 4
* 47	CT-006	TRAFFIC CONTROL - DETAILS
LANDSCAPE		
* 48	L-01	RESTORATION NOTES
* 49	L-02	RESTORATION PLAN - SHEET 1
* 50	L-03	RESTORATION PLAN - SHEET 2
* 51	L-04	RESTORATION PLAN - SHEET 3
* 52	L-05	RESTORATION PLAN - SHEET 4
* 53	L-06	LANDSCAPE SCHEDULE AND DETAILS
* 54	L-07	RESTORATION DETAILS

* **NOT INCLUDED IN THIS SET**

WARNING
IT IS A VIOLATION OF SECTION 7209.2 OF THE NEW YORK STATE EDUCATION LAW FOR ANY PERSON, UNLESS ACTING UNDER THE DIRECTION OF A LICENSED PROFESSIONAL ENGINEER, TO ALTER IN ANY WAY PLANS, SPECIFICATIONS, PLATS OR REPORTS TO WHICH THE SEAL OF A PROFESSIONAL ENGINEER HAS BEEN APPLIED. IF AN ITEM BEARING THE SEAL OF A PROFESSIONAL ENGINEER IS ALTERED, THE ALTERING ENGINEER SHALL AFFIX TO THE ITEM HIS SEAL AND THE NOTATION "ALTERED BY" FOLLOWED BY HIS SIGNATURE, THE DATE, AND A SPECIFIC DESCRIPTION OF THE ALTERATION.

File = Q:\90500-000-NYC\Drawings\535109-015\Civil\G-001 Saved by wallace Save date = 6/2/2020 10:11 AM
PLOT DATE: 6/4/2020 5:24 PM BY: LWALLACE

Hazen
ARCADIS
LEGAL ENTITY: MALCOLM PIRNIE, INC.
A JOINT VENTURE

SEALS

DO NOT USE FOR CONSTRUCTION

COUNTY OF NASSAU, NEW YORK
DEPARTMENT OF PUBLIC WORKS

LONG BEACH WPCP CONSOLIDATION FORCE MAIN

NO.	DATE	ISSUED FOR	BY

COPYRIGHT: 2020 HAZEN AND SAWYER/ ARCADIS A JOINT VENTURE

DATE: JUNE 2020
PROJECT NO.: H&S 90500-000
FILE NAME: G-001
DESIGNED BY: L. WALLACE
DRAWN BY: L. WALLACE
CHECKED BY: D. SHEERAN

SHEET TITLE

GENERAL

LEGEND, GENERAL NOTES AND ABBREVIATIONS

SCALE: AS SHOWN

LEGEND:

TRAVELED WAY SYMBOLS

SYMBOL	DESCRIPTION
	EXISTING PAVED ROAD
	EXISTING GRAVEL ROAD
	EXISTING SIGN
	DEMOLITION

LANDSCAPE AND TOPOGRAPHIC SYMBOLS

SYMBOL	DESCRIPTION
	EXISTING TREE LINE
1240	EXISTING INDEX CONTOUR
	EXISTING INTER CONTOUR
1240	NEW INDEX CONTOUR
	NEW INTER CONTOUR
×1240.00	NEW SPOT ELEVATION
	EXISTING TREE(S)
	EXISTING WETLAND
	EXISTING STREAM
	PROPOSED SEEDING

BOUNDARY AND MARKER SYMBOLS

SYMBOL	DESCRIPTION
x x	EXISTING CHAIN LINK FENCE
	EXISTING METAL FENCE
LOD LOD LOD LOD	LIMIT OF DISTURBANCE
x x	TEMPORARY OR PERMANENT CHAIN LINK FENCE
TB-XX	EXISTING BORING

WARNING
IT IS A VIOLATION OF SECTION 7209.2 OF THE NEW YORK STATE EDUCATION LAW FOR ANY PERSON, UNLESS ACTING UNDER THE DIRECTION OF A LICENSED PROFESSIONAL ENGINEER, TO ALTER IN ANY WAY PLANS, SPECIFICATIONS, PLATS OR REPORTS TO WHICH THE SEAL OF A PROFESSIONAL ENGINEER HAS BEEN APPLIED. IF AN ITEM BEARING THE SEAL OF A PROFESSIONAL ENGINEER IS ALTERED, THE ALTERING ENGINEER SHALL AFFIX TO THE ITEM HIS SEAL AND THE NOTATION "ALTERED BY" FOLLOWED BY HIS SIGNATURE, THE DATE, AND A SPECIFIC DESCRIPTION OF THE ALTERATION.

GENERAL NOTES:

1. SITE INFORMATION HAS BEEN PROVIDED BY SITE SURVEY PREPARED BY FOIT-ALBERT ASSOCIATES, DATED MARCH 2020.
2. HORIZONTAL CONTROL IS REFERENCED TO THE NEW YORK STATE PLANE COORDINATE SYSTEM, EAST ZONE, BASED ON THE NORTH AMERICAN DATUM OF 1983 (NAD 83). VERTICAL CONTROL IS REFERENCED TO THE NORTH AMERICAN VERTICAL DATUM OF 1988 (NAVD 88).
3. CONTRACTOR SHALL VERIFY FIELD CONDITIONS BEFORE COMMENCEMENT OF ANY CONSTRUCTION ACTIVITIES. CONTRACTOR SHALL VERIFY EXISTING ELEVATIONS AND DIMENSIONS WHERE NEW WORK WILL MATCH EXISTING. DISCREPANCIES SHALL BE BROUGHT TO THE ATTENTION OF THE ENGINEER FOR RESOLUTION PRIOR TO THE COMMENCEMENT OF WORK.
4. CONTRACTOR SHALL OBTAIN ALL THE NECESSARY PERMITS FROM THE APPROPRIATE AUTHORITIES, DEPARTMENTS, AND/OR AGENCIES HAVING JURISDICTION PRIOR TO COMMENCING WORK.
5. CONTRACTOR SHALL TAKE CARE TO AVOID DAMAGE TO EXISTING PAVEMENT, TREES, VEGETATION, STRUCTURES, AND UTILITIES THAT ARE NOT INDICATED TO BE DEMOLISHED OR REMOVED. ANY DAMAGE TO EXISTING PAVEMENT, TREES, VEGETATION, STRUCTURES, AND UTILITIES NOT INDICATED TO BE DEMOLISHED OR REMOVED SHALL BE REPAIRED IN A MANNER SATISFACTORY TO THE OWNER/ENGINEER AT THE CONTRACTOR'S EXPENSE.
6. UTILITIES HAVE BEEN PLOTTED FROM AVAILABLE SURVEY INFORMATION. IT IS THE CONTRACTOR'S RESPONSIBILITY TO VERIFY THEIR EXACT LOCATION AND TO AVOID DAMAGE TO THEM. THE CONTRACTOR SHALL CONTACT DIG SAFELY NEW YORK AT PHONE NUMBER 811 OR 1-800-962-7962 TO REQUEST UNDERGROUND UTILITY LOCATION MARK-OUT AT LEAST TWO (2) WORKING DAYS BUT NO MORE THAN TEN (10) WORKING DAYS PRIOR TO BEGINNING EXCAVATION, INCLUDING SOIL DRILLING. THE CONTRACTOR SHALL ALSO CONTACT AND REQUEST UTILITY LOCATION MARK-OUT FROM BURIED UTILITY OWNERS WITH UTILITIES ON THE PROJECT SITE THAT ARE NOT PARTICIPANTS OF DIG SAFELY NEW YORK.
7. WHERE PROPOSED WORK IS IN THE VICINITY OF UTILITY POLES, SUCH THAT SUPPORT OF THE POLE(S) WILL BE REQUIRED, THE CONTRACTOR SHALL BE RESPONSIBLE FOR NOTIFYING THE UTILITY OF THE WORK. IT WILL BE THE RESPONSIBILITY OF THE CONTRACTOR TO COORDINATE WITH THE UTILITY FOR SUPPORT OF THE POLE.
8. WHERE OVERHEAD POWER LINES ARE PRESENT, CONTRACTOR MUST CONTACT THE UTILITY PRIOR TO CONSTRUCTION ACTIVITIES TO DETERMINE THE MINIMUM REQUIRED EQUIPMENT CLEARANCE (MEC) DISTANCE BASED UPON LINE STRENGTH.
9. DURING EXCAVATION AND PLACEMENT OF UTILITIES THE CONTRACTOR SHALL COMPLY WITH ALL APPLICABLE SAFETY REGULATIONS AND SHALL SUBMIT TO THE ENGINEER FOR APPROVAL SHEET PILING, SHORING AND/OR BRACING DESIGNS AS MAY BE NECESSARY TO COMPLY WITH THESE REGULATIONS.
10. ALL MATERIALS, CONSTRUCTION METHODS, AND WORKMANSHIP SHALL CONFORM WITH THE CONSTRUCTION SPECIFICATIONS AND DRAWINGS.
11. GROUNDWATER FROM ALL DEWATERING OPERATIONS SHALL BE DISCHARGED TO AN ENVIRONMENTALLY ACCEPTABLE LOCATION IN ACCORDANCE WITH THE CONTRACT DOCUMENTS, OR AS DIRECTED BY THE ENGINEER.
12. ALL TEMPORARY FACILITIES ARE SUBJECT TO THE SAME HEALTH AND SAFETY REQUIREMENTS AS PERMANENT FACILITIES, AS SPECIFIED IN THE CONTRACT DOCUMENTS AND HEALTH SAFETY PLAN (HASP).
13. THE CONTRACTOR SHALL REMOVE AND DISPOSE OF ALL DEBRIS GENERATED DURING THE PROJECT OFF SITE AT A PROPERLY PERMITTED DISPOSAL FACILITY.
14. CONTRACTOR SHALL MAKE EVERY EFFORT TO SAVE AND MAINTAIN ALL PROPERTY IRONS, MONUMENTS, OTHER PERMANENT POINTS AND LINES OF REFERENCE AND CONSTRUCTION STAKES. A STATE OF NEW YORK REGISTERED LAND SURVEYOR AT THE CONTRACTOR'S EXPENSE SHALL REPLACE PROPERTY IRONS, MONUMENTS, AND OTHER PERMANENT POINTS OF REFERENCE DESTROYED BY THE CONTRACTOR.
15. TIDAL ELEVATIONS FOR THE WATERWAYS ARE AS LISTED BELOW.
    - MHHW: 2.29
    - MHW: 1.96
    - MLW: -2.67
    - MLLW: -2.86

CIVIL ABBREVIATIONS:

SYMBOLS

&	AND
@	AT
°	DEGREES
Ø	DIAMETER
'	FEET
"	INCHES
#	NUMBER
%	PERCENT

A

AC	ACRE
ACB	ARTICULATED CONCRETE BLOCK
AL	ALUMINUM
APPROX	APPROXIMATE(LY)
ARCH	ARCHITECTURE
ASTM	AMERICAN SOCIETY FOR TESTING MATERIALS

B

BP	BEGIN POINT
BLDG	BUILDING

C

CAM	CAMERA
CHH	COMMUNICATION HANDHOLE
CIP	CAST IRON PIPE
CL	CENTERLINE
COM	COMMUNICATION
CONC	CONCRETE
CONST	CONSTRUCTION
CPVC	CHLORINATED POLYVINYL CHLORIDE PIPE
CU FT	CUBIC FEET

D

DEP	DEPARTMENT OF ENVIRONMENTAL PROTECTION
DEPT	DEPARTMENT
DET	DETAIL
DOH	DEPARTMENT OF HEALTH
DOT	DEPARTMENT OF TRANSPORTATION
DWG(S)	DRAWING, DRAWINGS
DS	DRAINAGE SWALE

E

E	EAST(ING)
EF	EACH FACE
EG	EXISTING GRADE/GROUND
EHH	ELECTRICAL HANDHOLE
EL	ELEVATION
ELEC	ELECTRICAL
EM	EMERGENCY
EOP	EDGE OF PAVEMENT
EP	END POINT
EW	EACH WAY
EX	EXISTING

F

FES	FLARED END SECTION
FG	FINISHED GRADE
FT	FEET
FM	FORCE MAIN

G

GAL	GALLON
GPD	GALLONS PER DAY
GPM	GALLONS PER MINUTE
GS	GENERAL SPECIFICATION

H

HH	HANDHOLE
H	HIGH, HEIGHT
HDPE	HIGH-DENSITY POLYETHYLENE PIPE
HP	HIGH POINT
HVAC	HEATING VENTILATING, AND AIR CONDITIONING
HW	HEADWALL

I

INV	INVERT
INL	INLET
INST	INSTRUMENTATION & CONTROLS

J

JT	JOINT

L

L	LONG, LENGTH
LAND	LANDSCAPE
LB	POUND
LF	LATERAL FEET
LVC	LENGTH OF VERTICAL CURVATURE

M

MATL	MATERIAL
MAX	MAXIMUM
MECH	MECHANICAL
MFG	MANUFACTURER
MH	MANHOLE
MHHW	MEAN-HIGH HIGH WATER
MHW	MEAN HIGH WATER
MIN	MINIMUM
MJ	MECHANICAL JOINT
MLLW	MEAN-LOW LOW WATER
MLW	MEAN LOW WATER
MTD	MOUNTED

N

N	NORTH(ING)
NPW	NON-POTABLE WATER
NTS	NOT TO SCALE
NYC	NEW YORK CITY
NYS	NEW YORK STATE

O

OC	ON CENTER

P

PC	POINT OF CURVATURE
PLMB	PLUMBING
PS	PUMP STATION
PSF	POUNDS PER SQUARE FOOT
PSI	POUNDS PER SQUARE INCH
PT	POINT OF TANGENCY
PPVC	PERFORATED POLYVINYL CHLORIDE PIPE
PVC	POLYVINYL CHLORIDE PIPE
PVI	POINT OF VERTICAL INFLECTION
PVMNT	PAVEMENT
PVT	POINT OF VERTICAL TANGENCY

R

R	RADIUS
RCP	REINFORCED CONCRETE PIPE
RECM	ROLLED EROSION CONTROL MATTING
ROW	RIGHT-OF-WAY
RTE	ROUTE

S

S	SWALE
SCH	SCHEDULE
SF	SQUARE FEET
SD	STORM DRAIN
SPEC(S)	SPECIFICATION(S)
SMH	SANITARY MANHOLE
SST	STAINLESS STEEL
STA	STATION
STL	STEEL
STP	SEWAGE TREATMENT PLANT
STRU	STRUCTURAL

T

T&B	TOP AND BOTTOM
TM	TRANSMISSION MAIN
TOC	TOP OF CONCRETE
TOW	TOP OF WALL
TRM	TURF REINFORCEMENT MATTING
TUNN	TUNNEL
TYP	TYPICAL

U

UTIL	UTILITY

V

V	VOLT

W

W	WIDE, WIDTH
W/	WITH
WPCP	
WS	WATER SURFACE

Y

YI	YARD INLET

Hazen
ARCADIS
LEGAL ENTITY: MALCOLM PIRNIE, INC.
A JOINT VENTURE

SEALS

DO NOT USE FOR CONSTRUCTION

COUNTY OF NASSAU, NEW YORK
DEPARTMENT OF PUBLIC WORKS

LONG BEACH WPCP CONSOLIDATION FORCE MAIN

NO.	DATE	ISSUED FOR	BY

COPYRIGHT: 2020 HAZEN AND SAWYER/ ARCADIS A JOINT VENTURE

DATE: JUNE 2020
PROJECT NO.: H&S 90500-000
FILE NAME: G-002
DESIGNED BY: L. WALLACE
DRAWN BY: L. WALLACE
CHECKED BY: D. SHEERAN

SHEET TITLE

GENERAL

LEGEND, GENERAL NOTES AND ABBREVIATIONS

SCALE: AS SHOWN

File = Q:\90500-000-NYC\Drawings\533109-015\Civil\G-002 Saved by wallace Save date = 6/4/2020 2:55 PM
PLOT DATE: 6/4/2020 2:55 PM BY: LWALLACE

HDD KEY PLAN

SCALE: 1" = 600'

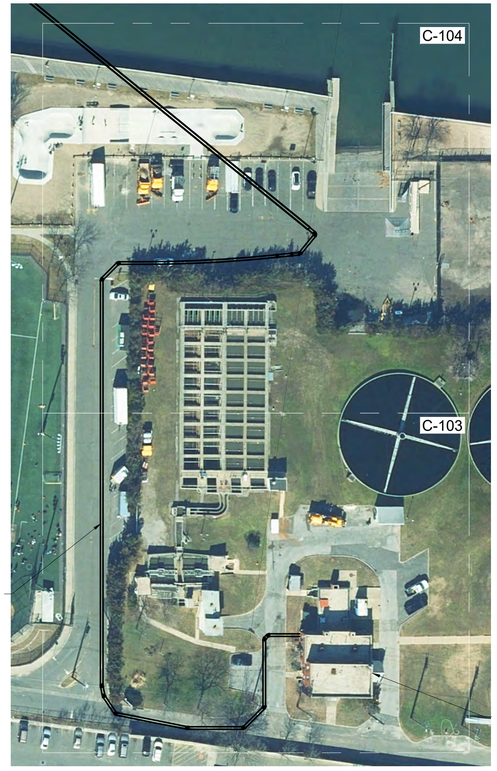

LONG BEACH KEY PLAN

SCALE: 1" = 60'

BAY PARK KEY PLAN

SCALE: 1" = 300'

SCALE: 1" = 60' 60 30 0 60'

SCALE: 1" = 300' 300 150 0 300'

SCALE: 1" = 600' 600 300 0 600'

WARNING
IT IS A VIOLATION OF SECTION 7209.2 OF THE NEW YORK STATE EDUCATION LAW FOR ANY PERSON, UNLESS ACTING UNDER THE DIRECTION OF A LICENSED PROFESSIONAL ENGINEER, TO ALTER IN ANY WAY PLANS, SPECIFICATIONS, PLATS OR REPORTS TO WHICH THE SEAL OF A PROFESSIONAL ENGINEER HAS BEEN APPLIED. IF AN ITEM BEARING THE SEAL OF A PROFESSIONAL ENGINEER IS ALTERED, THE ALTERING ENGINEER SHALL AFFIX TO THE ITEM HIS SEAL AND THE NOTATION "ALTERED BY" FOLLOWED BY HIS SIGNATURE, THE DATE, AND A SPECIFIC DESCRIPTION OF THE ALTERATION.

File = G:\90500-000-NYC\Drawings\S35109-0515\Civil\C-001 Saved by lwallace Save date = 6/4/2020 11:22 AM
PLOT DATE: 6/4/2020 5:14 PM BY: LWALLACE

Hazen
ARCADIS
LEGAL ENTITY: MALCOLM PIRNIE, INC.
A JOINT VENTURE

SEALS

DO NOT USE FOR CONSTRUCTION

COUNTY OF NASSAU, NEW YORK
DEPARTMENT OF PUBLIC WORKS

LONG BEACH WPCP CONSOLIDATION FORCE MAIN

NO.	DATE	ISSUED FOR	BY

COPYRIGHT: 2020 HAZEN AND SAWYER/ ARCADIS A JOINT VENTURE

DATE: JUNE 2020
PROJECT NO.: H&S 90500-000
FILE NAME: C-001
DESIGNED BY: L. WALLACE
DRAWN BY: L. WALLACE
CHECKED BY: D. SHEERAN

SHEET TITLE

CIVIL

KEY PLANS

SCALE: AS SHOWN

SHEET 4 OF 59

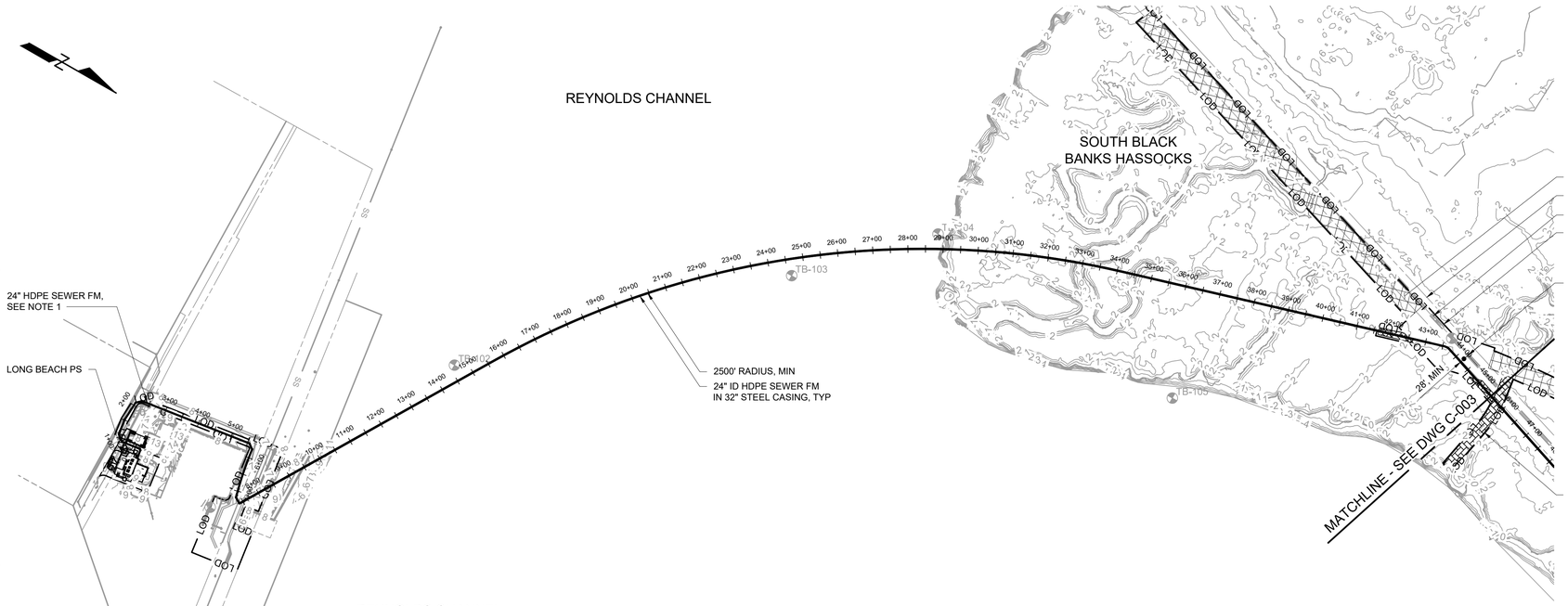

PLAN

SCALE: 1" = 200'

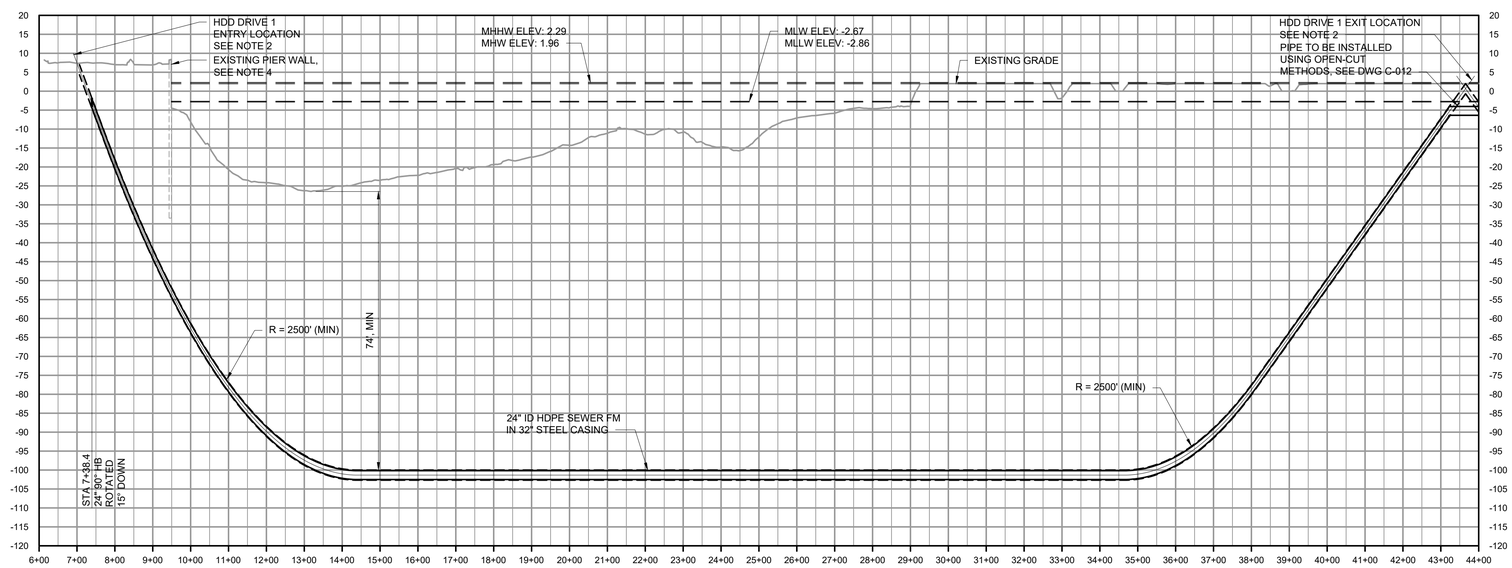

PROFILE

HORIZONTAL SCALE: 1" = 200'
VERTICAL SCALE: 1"=20'

NOTES

1. SEE DRAWINGS C-103 AND C-104 FOR THE FORCE MAIN FROM LONG BEACH WPCP TO THE CONNECTION WITH HDD DRIVE 1.
2. THE ENTRY ANGLE FOR HDD DRIVE 1 IS 15° AND THE EXIT ANGLE FOR HDD DRIVE 1 IS 8°. SEE DWGS C-012 AND C-104 FOR ADDITIONAL INFORMATION AT THESE LOCATIONS.
3. TIDAL ELEVATIONS SHOWN ON THE PROFILES WERE TAKEN FROM THE NATIONAL OCEANIC AND ATMOSPHERIC ADMINISTRATION (NOAA) WEBSITE.
4. THE PIER WALL HAS BEEN DRAWN ACCORDING TO RECORDS PROVIDED BY THE CITY OF LONG BEACH.

WARNING
IT IS A VIOLATION OF SECTION 7209.2 OF THE NEW YORK STATE EDUCATION LAW FOR ANY PERSON, UNLESS ACTING UNDER THE DIRECTION OF A LICENSED PROFESSIONAL ENGINEER, TO ALTER IN ANY WAY PLANS, SPECIFICATIONS, PLATS OR REPORTS TO WHICH THE SEAL OF A PROFESSIONAL ENGINEER HAS BEEN APPLIED. IF AN ITEM BEARING THE SEAL OF A PROFESSIONAL ENGINEER IS ALTERED, THE ALTERING ENGINEER SHALL AFFIX TO THE ITEM HIS SEAL AND THE NOTATION "ALTERED BY" FOLLOWED BY HIS SIGNATURE, THE DATE, AND A SPECIFIC DESCRIPTION OF THE ALTERATION.

SCALE: 1" = 20' 20 10 0 20'

SCALE: 1" = 200' 200 100 0 200'

Hazen
ARCADIS
LEGAL ENTITY: MALCOLM PIRNIE, INC.
A JOINT VENTURE

SEALS

DO NOT USE FOR CONSTRUCTION

COUNTY OF NASSAU, NEW YORK
DEPARTMENT OF PUBLIC WORKS

LONG BEACH WPCP CONSOLIDATION FORCE MAIN

NO.	DATE	ISSUED FOR	BY

COPYRIGHT: 2020 HAZEN AND SAWYER/ ARCADIS A JOINT VENTURE

DATE: JUNE 2020
PROJECT NO.: H&S 90500-000
FILE NAME: C-002
DESIGNED BY: L. WALLACE
DRAWN BY: K. ROBBINS
CHECKED BY: D. SHEERAN

SHEET TITLE

CIVIL

HDD DRIVE 1 – PLAN AND PROFILE

SCALE: AS SHOWN

SHEET 5 OF 59

File = Q:\90500-000-NYC\Drawings\535109-015\Civil\C-002 Saved by wallace Save date = 6/4/2020 3:15 PM
PLOT DATE: 6/4/2020 5:17 PM BY: WALLACE

NOTES

1. THE ENTRY ANGLE AND EXIT ANGLE FOR HDD DRIVE 2 IS 8°. SEE DWG C-012 FOR ADDITIONAL INFORMATION AT THESE LOCATIONS.
2. TIDAL ELEVATIONS SHOWN ON THE PROFILES WERE TAKEN FROM THE NATIONAL OCEANIC AND ATMOSPHERIC ADMINISTRATION (NOAA) WEBSITE.

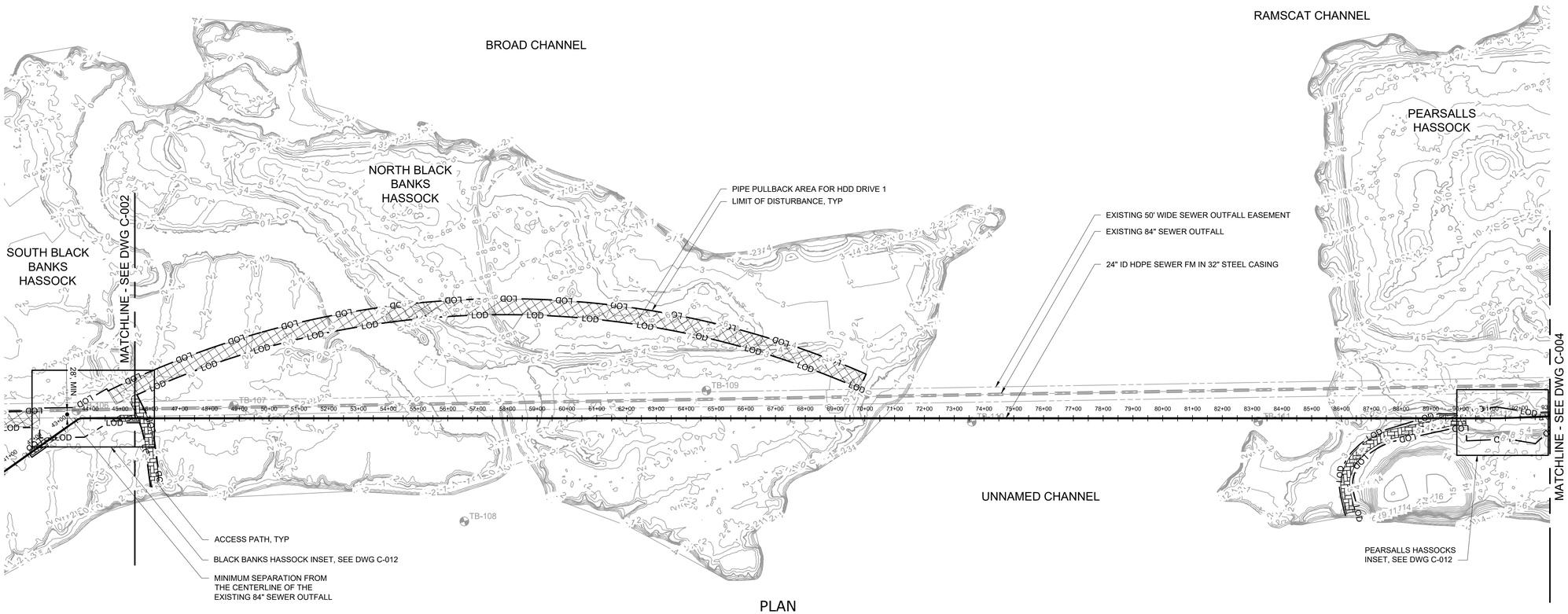

PLAN

SCALE: 1" = 200'

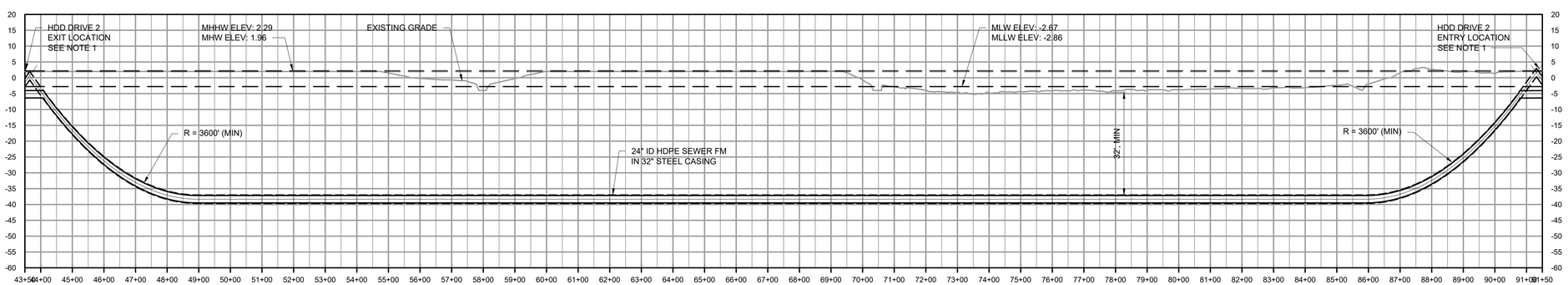

PROFILE

HORIZONTAL SCALE: 1" = 200'
VERTICAL SCALE: 1"=20'

WARNING
IT IS A VIOLATION OF SECTION 7209.2 OF THE NEW YORK STATE EDUCATION LAW FOR ANY PERSON, UNLESS ACTING UNDER THE DIRECTION OF A LICENSED PROFESSIONAL ENGINEER, TO ALTER IN ANY WAY PLANS, SPECIFICATIONS, PLATS OR REPORTS TO WHICH THE SEAL OF A PROFESSIONAL ENGINEER HAS BEEN APPLIED. IF AN ITEM BEARING THE SEAL OF A PROFESSIONAL ENGINEER IS ALTERED, THE ALTERING ENGINEER SHALL AFFIX TO THE ITEM HIS SEAL AND THE NOTATION "ALTERED BY" FOLLOWED BY HIS SIGNATURE, THE DATE, AND A SPECIFIC DESCRIPTION OF THE ALTERATION.

SCALE: 1" = 20' 20 10 0 20'

SCALE: 1" = 200' 200 100 0 200'

Hazen
ARCADIS
LEGAL ENTITY: MALCOLM PIRNIE, INC.
A JOINT VENTURE

SEALS

DO NOT USE FOR CONSTRUCTION

COUNTY OF NASSAU, NEW YORK
DEPARTMENT OF PUBLIC WORKS

LONG BEACH WPCP CONSOLIDATION FORCE MAIN

NO.	DATE	ISSUED FOR	BY

COPYRIGHT: 2020 HAZEN AND SAWYER/ ARCADIS A JOINT VENTURE

DATE: JUNE 2020
PROJECT NO.: H&S 90500-000
FILE NAME: C-003
DESIGNED BY: L. WALLACE
DRAWN BY: K. ROBBINS
CHECKED BY: D. SHEERAN

SHEET TITLE

CIVIL

HDD DRIVE 2 - PLAN AND PROFILE

SCALE: AS SHOWN

SHEET 6 OF 59

File = O:\90500-000-NHC\Drawings\335109-015\Civil\C-003 Saved by wallace Save date = 6/4/2020 3:47 PM
PLOT DATE: 6/4/2020 6:19 PM BY: L.WALLACE

NOTES

1. SEE DRAWING C-105 FOR TRANSITION FROM THE HDD SECTION TO OPEN-CUT AND CONTINUATION OF THE FORCE MAIN.
2. THE ENTRY ANGLE AND EXIT ANGLE FOR HDD DRIVE 3 IS 8°. SEE DWGS C-012 AND C-105 FOR ADDITIONAL INFORMATION AT THESE LOCATIONS.
3. TIDAL ELEVATIONS SHOWN ON THE PROFILES WERE TAKEN FROM THE NATIONAL OCEANIC AND ATMOSPHERIC ADMINISTRATION (NOAA) WEBSITE.

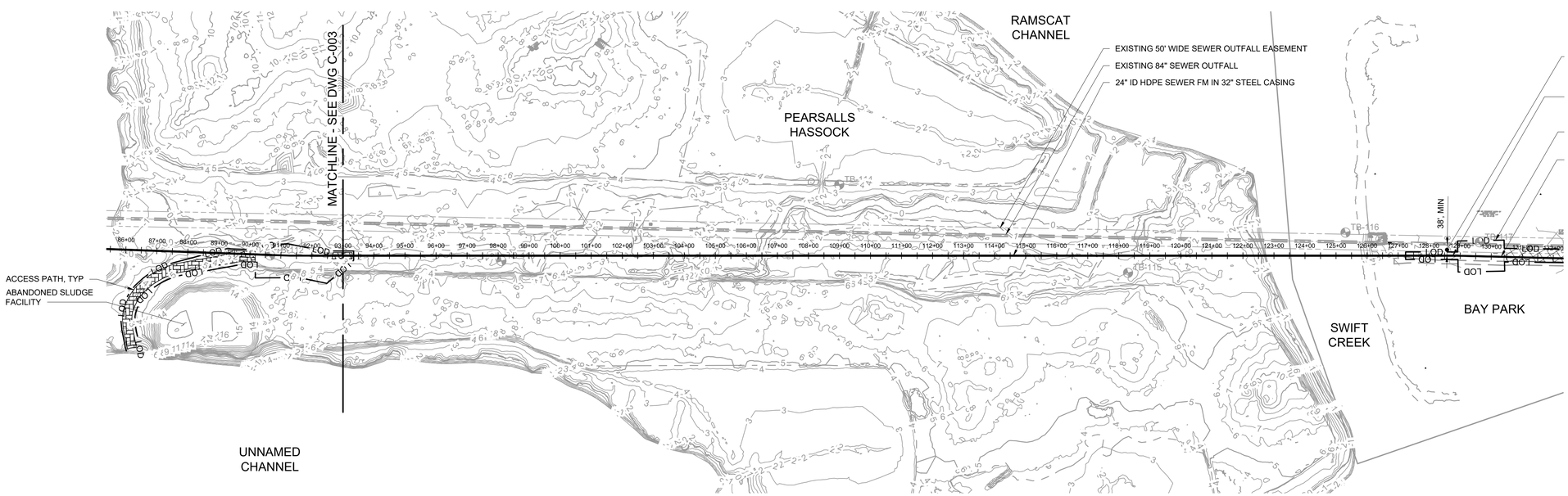

PLAN

SCALE: 1" = 200'

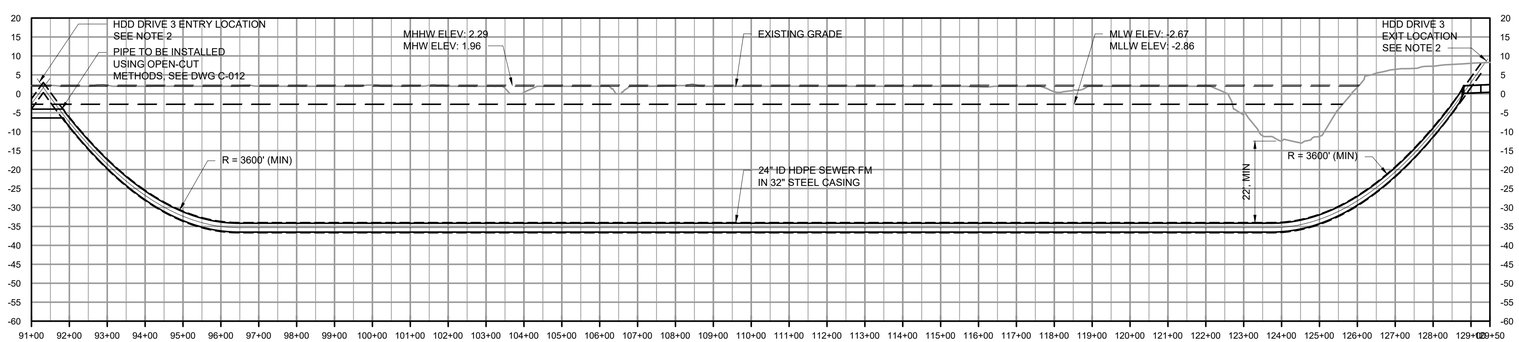

PROFILE

HORIZONTAL SCALE: 1" = 200'
VERTICAL SCALE: 1"=20'

WARNING
IT IS A VIOLATION OF SECTION 7209.2 OF THE NEW YORK STATE EDUCATION LAW FOR ANY PERSON, UNLESS ACTING UNDER THE DIRECTION OF A LICENSED PROFESSIONAL ENGINEER, TO ALTER IN ANY WAY PLANS, SPECIFICATIONS, PLATS OR REPORTS TO WHICH THE SEAL OF A PROFESSIONAL ENGINEER HAS BEEN APPLIED. IF AN ITEM BEARING THE SEAL OF A PROFESSIONAL ENGINEER IS ALTERED, THE ALTERING ENGINEER SHALL AFFIX TO THE ITEM HIS SEAL AND THE NOTATION "ALTERED BY" FOLLOWED BY HIS SIGNATURE, THE DATE, AND A SPECIFIC DESCRIPTION OF THE ALTERATION.

SCALE: 1" = 20' 20 10 0 20'

SCALE: 1" = 200' 200 100 0 200'

Hazen
ARCADIS
LEGAL ENTITY: MALCOLM PIRNIE, INC.
A JOINT VENTURE

SEALS

DO NOT USE FOR CONSTRUCTION

COUNTY OF NASSAU, NEW YORK
DEPARTMENT OF PUBLIC WORKS

LONG BEACH WPCP CONSOLIDATION FORCE MAIN

NO.	DATE	ISSUED FOR	BY

COPYRIGHT: 2020 HAZEN AND SAWYER/ ARCADIS A JOINT VENTURE

DATE: JUNE 2020
PROJECT NO.: H&S 90500-000
FILE NAME: C-004
DESIGNED BY: L. Wallace
DRAWN BY: L. WALLACE
CHECKED BY: D. SHEERAN

SHEET TITLE

CIVIL

HDD DRIVE 3 – PLAN AND PROFILE

SCALE: AS SHOWN

SHEET 7 OF 59

File = Q:\90500-000-NYC\Drawings\535109-015\Civil\C-004 Saved by wallace Save date = 6/4/2020 3:16 PM
PLOT DATE: 6/4/2020 5:21 PM BY: L.WALLACE

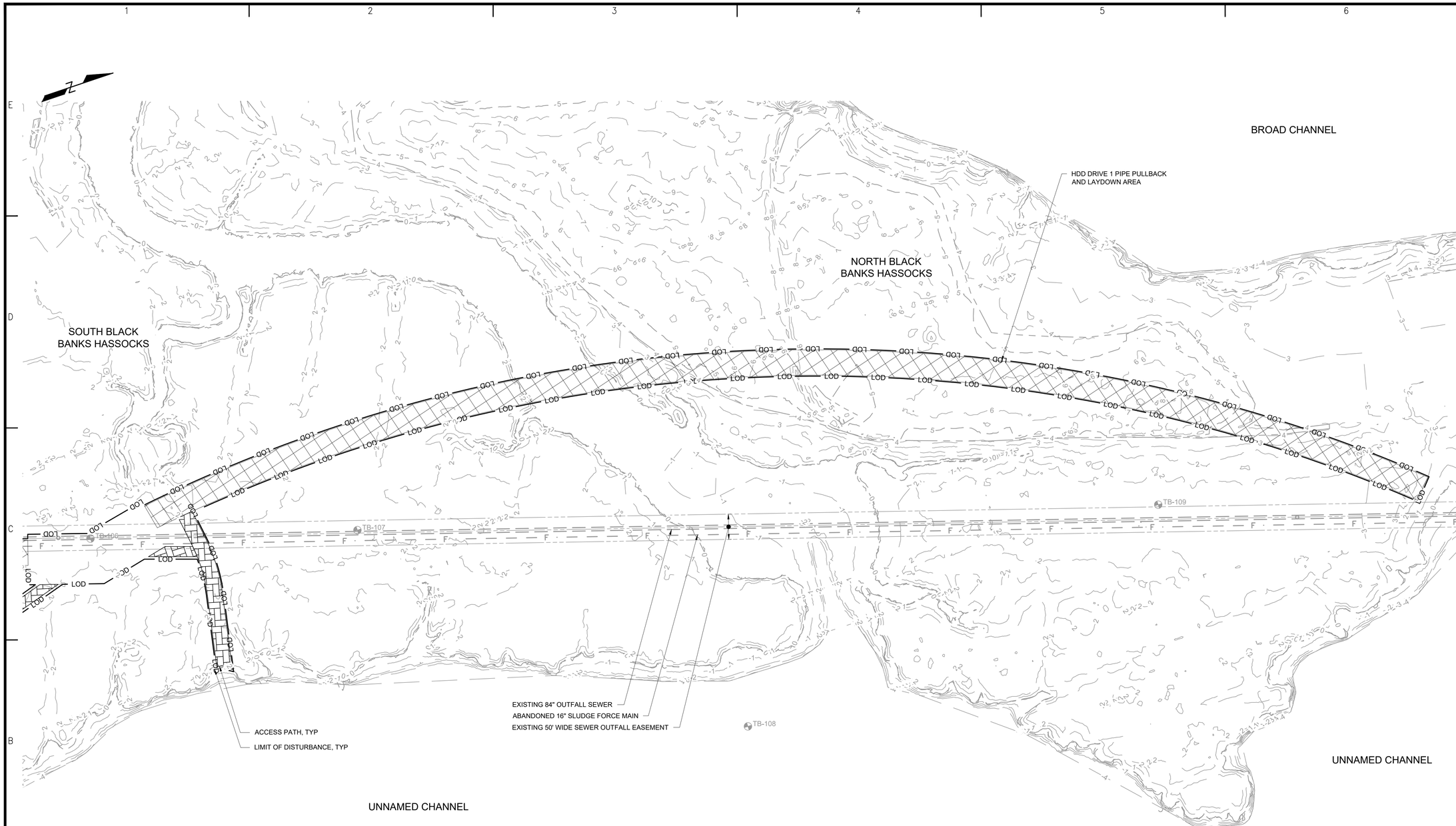

PLAN

SCALE: 1" = 100'

WARNING
IT IS A VIOLATION OF SECTION 7209.2 OF THE NEW YORK STATE EDUCATION LAW FOR ANY PERSON, UNLESS ACTING UNDER THE DIRECTION OF A LICENSED PROFESSIONAL ENGINEER, TO ALTER IN ANY WAY PLANS, SPECIFICATIONS, PLATS OR REPORTS TO WHICH THE SEAL OF A PROFESSIONAL ENGINEER HAS BEEN APPLIED. IF AN ITEM BEARING THE SEAL OF A PROFESSIONAL ENGINEER IS ALTERED, THE ALTERING ENGINEER SHALL AFFIX TO THE ITEM HIS SEAL AND THE NOTATION "ALTERED BY" FOLLOWED BY HIS SIGNATURE, THE DATE, AND A SPECIFIC DESCRIPTION OF THE ALTERATION.

SCALE: 1" = 100' 100 50 0 100'

Hazen
ARCADIS
LEGAL ENTITY: MALCOLM PIRNIE, INC.
A JOINT VENTURE

SEALS

DO NOT USE FOR CONSTRUCTION

COUNTY OF NASSAU, NEW YORK
DEPARTMENT OF PUBLIC WORKS

LONG BEACH WPCP CONSOLIDATION FORCE MAIN

NO.	DATE	ISSUED FOR	BY

COPYRIGHT: 2020 HAZEN AND SAWYER/ ARCADIS A JOINT VENTURE

DATE: JUNE 2020
PROJECT NO.: H&S 90500-000
FILE NAME: C-008
DESIGNED BY: L. WALLACE
DRAWN BY: L. WALLACE
CHECKED BY: D. SHEERAN

SHEET TITLE

CIVIL

STAGING AND ACCESS PLAN – HDD DRIVE 1

SCALE: AS SHOWN

SHEET 11 OF 59

File = O:\90500-000-NYC\Drawings\35109-01S\Civil\C-008 Saved by lwallace Save date = 6/4/2020 3:17 PM
PLOT DATE: 6/4/2020 3:22 PM BY: LWALLACE

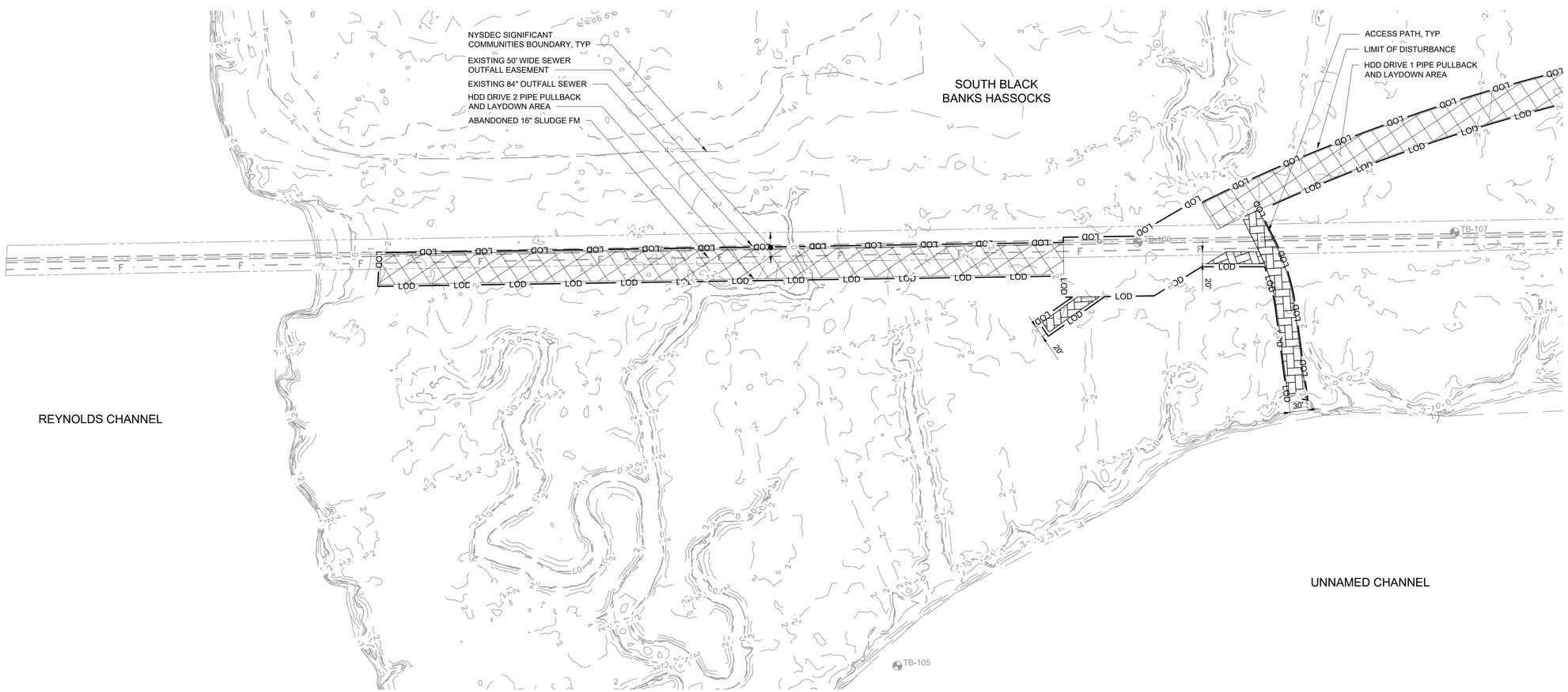

PLAN

SCALE: 1" = 100'

SCALE: 1" = 100' 100 50 0 100'

WARNING
IT IS A VIOLATION OF SECTION 7209.2 OF THE NEW YORK STATE EDUCATION LAW FOR ANY PERSON, UNLESS ACTING UNDER THE DIRECTION OF A LICENSED PROFESSIONAL ENGINEER, TO ALTER IN ANY WAY PLANS, SPECIFICATIONS, PLATS OR REPORTS TO WHICH THE SEAL OF A PROFESSIONAL ENGINEER HAS BEEN APPLIED. IF AN ITEM BEARING THE SEAL OF A PROFESSIONAL ENGINEER IS ALTERED, THE ALTERING ENGINEER SHALL AFFIX TO THE ITEM HIS SEAL AND THE NOTATION "ALTERED BY" FOLLOWED BY HIS SIGNATURE, THE DATE, AND A SPECIFIC DESCRIPTION OF THE ALTERATION.

File = O:\90500-000-NYC\Drawings\S35109-015\Civil\C-009 Saved by lwallace Save date = 6/4/2020 3:18 PM
PLOT DATE: 6/4/2020 5:23 PM BY: LWALLACE

Hazen
ARCADIS
LEGAL ENTITY: MALCOLM PIRNIE, INC.
A JOINT VENTURE

SEALS

DO NOT USE FOR CONSTRUCTION

COUNTY OF NASSAU, NEW YORK
DEPARTMENT OF PUBLIC WORKS

LONG BEACH WPCP CONSOLIDATION FORCE MAIN

NO.	DATE	ISSUED FOR	BY

COPYRIGHT: 2020 HAZEN AND SAWYER/ ARCADIS A JOINT VENTURE

DATE: JUNE 2020
PROJECT NO.: H&S 90500-000
FILE NAME: C-009
DESIGNED BY: L. WALLACE
DRAWN BY: L. WALLACE
CHECKED BY: D. SHEERAN

SHEET TITLE

CIVIL

STAGING AND ACCESS PLAN – HDD DRIVE 2

SCALE: AS SHOWN

SHEET 12 OF 59

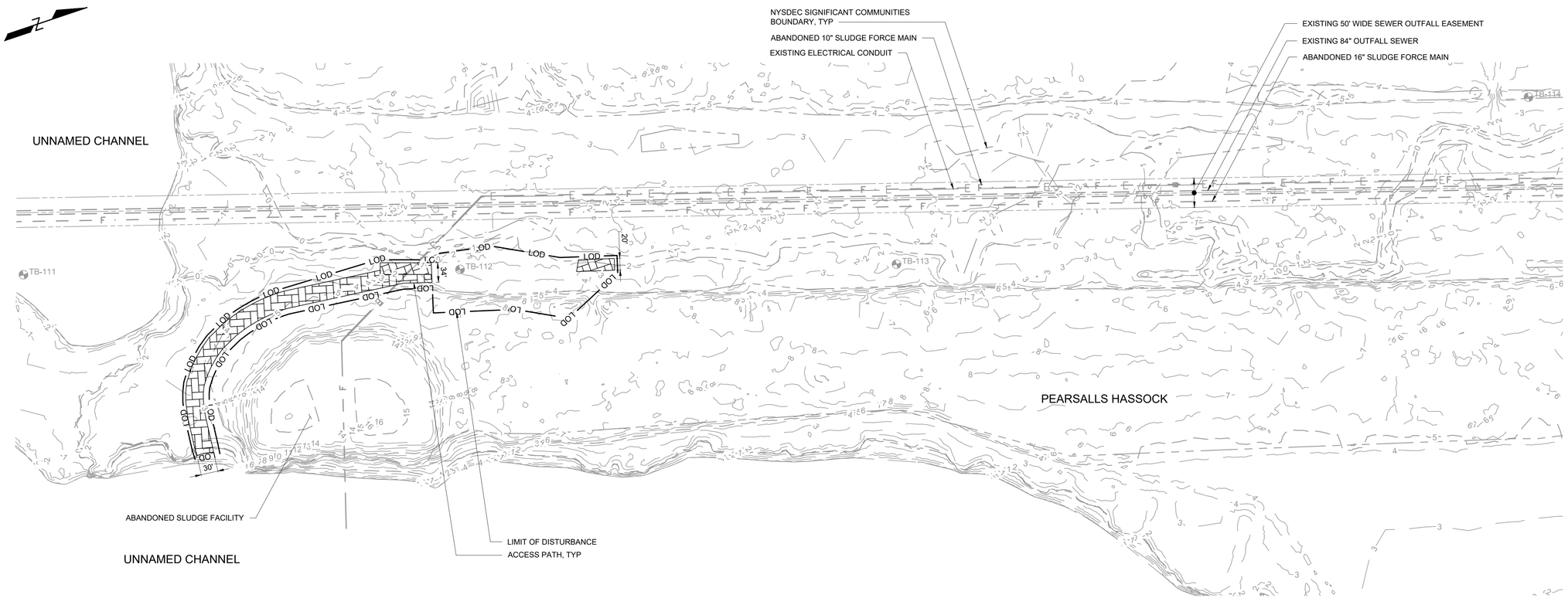

PLAN

SCALE: 1" = 100'

WARNING
IT IS A VIOLATION OF SECTION 7209.2 OF THE NEW YORK STATE EDUCATION LAW FOR ANY PERSON, UNLESS ACTING UNDER THE DIRECTION OF A LICENSED PROFESSIONAL ENGINEER, TO ALTER IN ANY WAY PLANS, SPECIFICATIONS, PLATS OR REPORTS TO WHICH THE SEAL OF A PROFESSIONAL ENGINEER HAS BEEN APPLIED. IF AN ITEM BEARING THE SEAL OF A PROFESSIONAL ENGINEER IS ALTERED, THE ALTERING ENGINEER SHALL AFFIX TO THE ITEM HIS SEAL AND THE NOTATION "ALTERED BY" FOLLOWED BY HIS SIGNATURE, THE DATE, AND A SPECIFIC DESCRIPTION OF THE ALTERATION.

SCALE: 1" = 100' 100 50 0 100'

Hazen
ARCADIS
LEGAL ENTITY: MALCOLM PIRNIE, INC.
A JOINT VENTURE

SEALS

DO NOT USE FOR CONSTRUCTION

COUNTY OF NASSAU, NEW YORK
DEPARTMENT OF PUBLIC WORKS

LONG BEACH WPCP CONSOLIDATION FORCE MAIN

NO.	DATE	ISSUED FOR	BY

COPYRIGHT: 2020 HAZEN AND SAWYER/ ARCADIS A JOINT VENTURE

DATE: JUNE 2020
PROJECT NO.: H&S 90500-000
FILE NAME: C-010
DESIGNED BY: L. WALLACE
DRAWN BY: L. WALLACE
CHECKED BY: D. SHEERAN

SHEET TITLE

CIVIL

STAGING AND ACCESS PLAN – PEARSALLS HASSOCK

SCALE: AS SHOWN

SHEET 13 OF 59

File = Q:\90500-000-NYC\Drawings\535109-015\Civil\C-010 Saved by lwallace Save date = 6/4/2020 3:27 PM
PLOT DATE: 6/4/2020 5:25 PM BY: LWALLACE

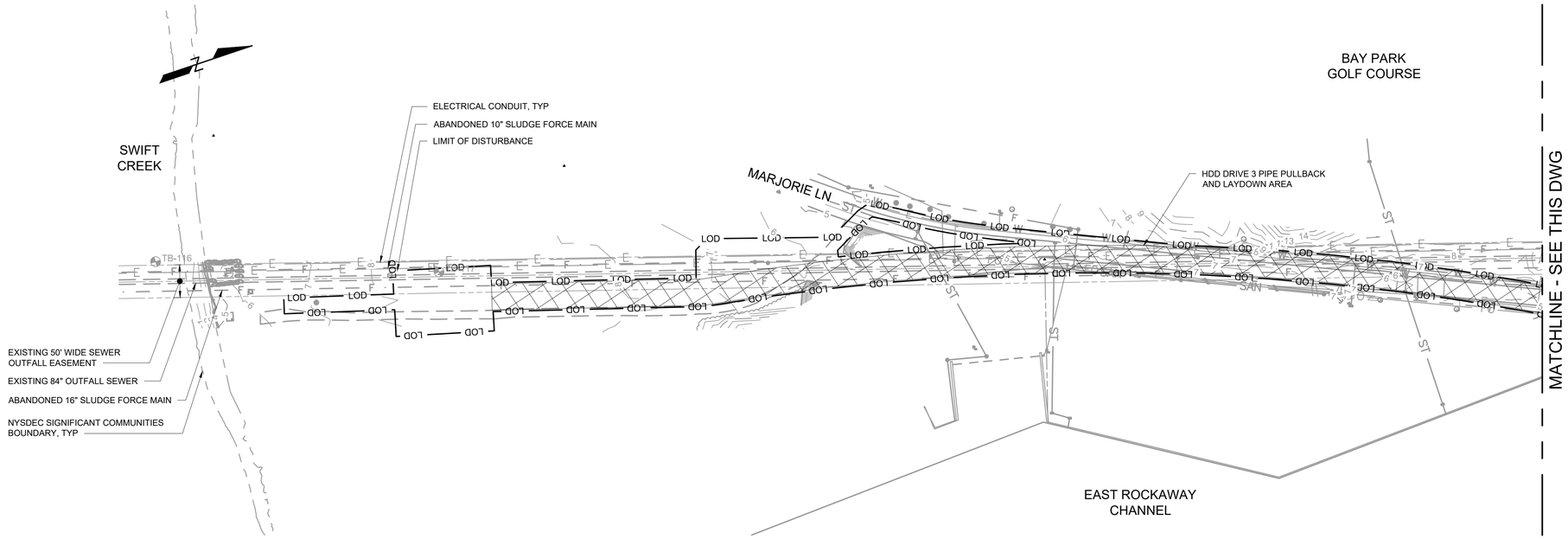

PLAN

SCALE: 1" = 100'

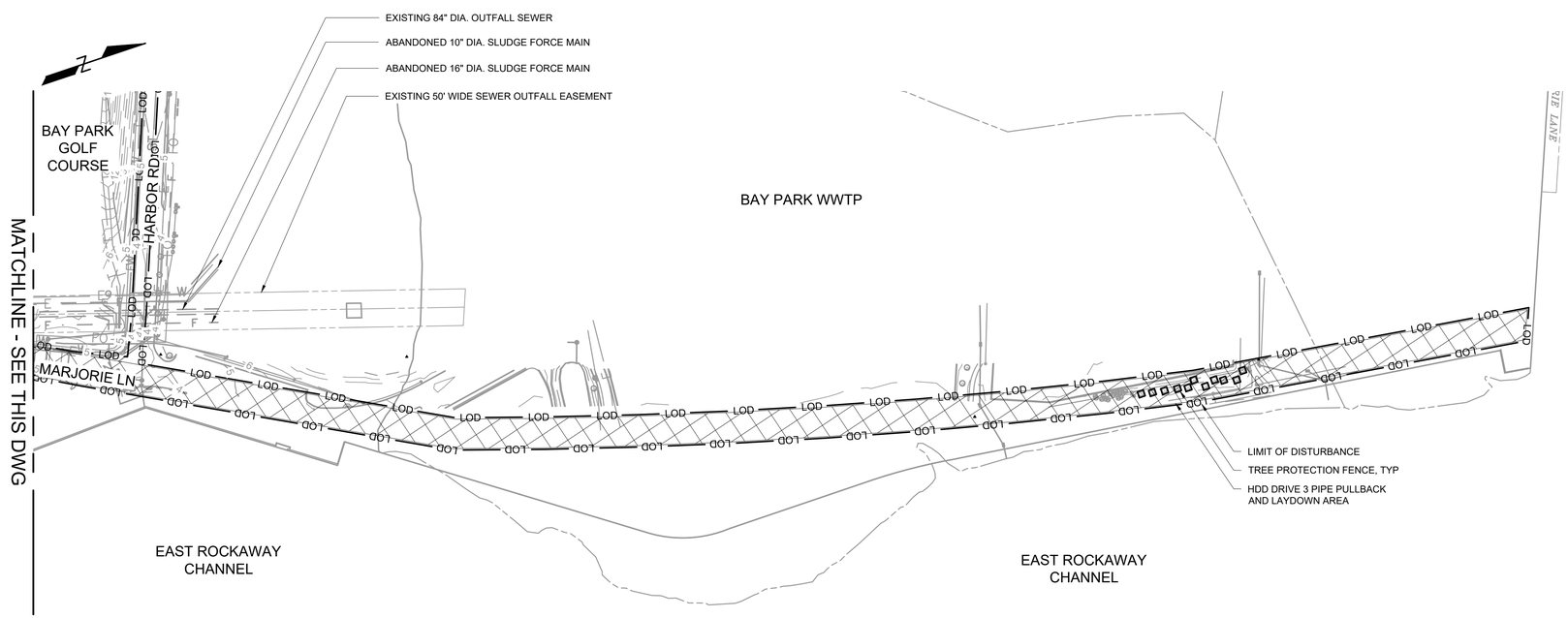

PLAN

SCALE: 1" = 100'

SCALE: 1" = 100'

100 50 0 100'

WARNING

IT IS A VIOLATION OF SECTION 7209.2 OF THE NEW YORK STATE EDUCATION LAW FOR ANY PERSON, UNLESS ACTING UNDER THE DIRECTION OF A LICENSED PROFESSIONAL ENGINEER, TO ALTER IN ANY WAY PLANS, SPECIFICATIONS, PLATS OR REPORTS TO WHICH THE SEAL OF A PROFESSIONAL ENGINEER HAS BEEN APPLIED. IF AN ITEM BEARING THE SEAL OF A PROFESSIONAL ENGINEER IS ALTERED, THE ALTERING ENGINEER SHALL AFFIX TO THE ITEM HIS SEAL AND THE NOTATION "ALTERED BY" FOLLOWED BY HIS SIGNATURE, THE DATE, AND A SPECIFIC DESCRIPTION OF THE ALTERATION.

File = Q:\90500-000-NYC\Drawings\535109-015\Civil\C-011 Saved by wallace Save date = 6/4/2020 3:33 PM
PLOT DATE: 6/4/2020 5:26 PM BY: WALLACE

Hazen

ARCADIS

LEGAL ENTITY: MALCOLM PIRNIE, INC.

A JOINT VENTURE

SEALS

DO NOT USE FOR CONSTRUCTION

COUNTY OF NASSAU, NEW YORK

DEPARTMENT OF PUBLIC WORKS

LONG BEACH WPCP CONSOLIDATION FORCE MAIN

NO.	DATE	ISSUED FOR	BY

COPYRIGHT: 2020 HAZEN AND SAWYER/ ARCADIS A JOINT VENTURE

DATE: JUNE 2020

PROJECT NO.: H&S 90500-000

FILE NAME: C-011

DESIGNED BY: L. WALLACE

DRAWN BY: L. WALLACE

CHECKED BY: D. SHEERAN

SHEET TITLE

CIVIL

STAGING AND ACCESS PLAN – HDD DRIVE 3

SCALE: AS SHOWN

SHEET 14 OF 59

NOTES

1. CONTRACTOR SHALL PROTECT ALL EXISTING UTILITIES DURING CONSTRUCTION.

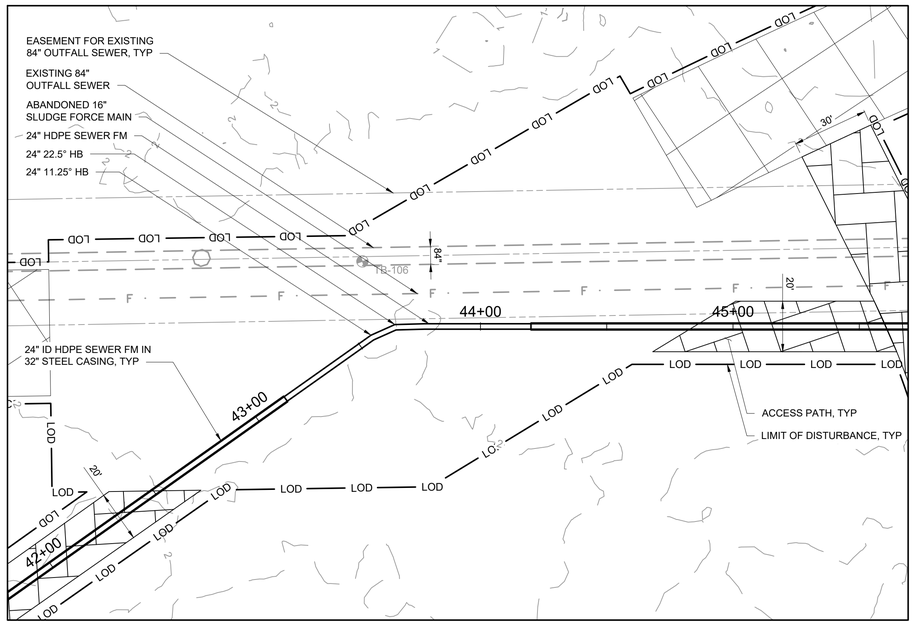

INSET - BLACK BANKS HASSOCKS

SCALE: 1" = 30'

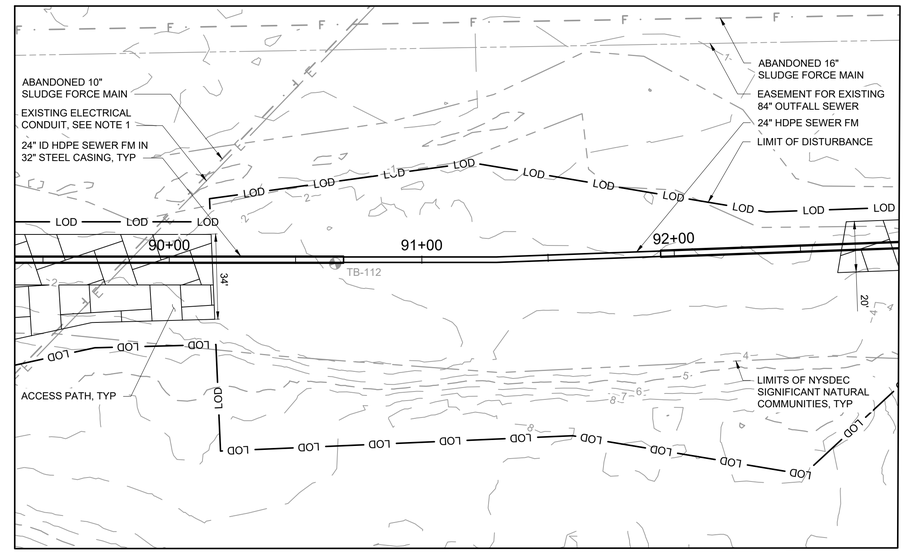

INSET - PEARSALLS HASSOCKS

SCALE: 1" = 30'

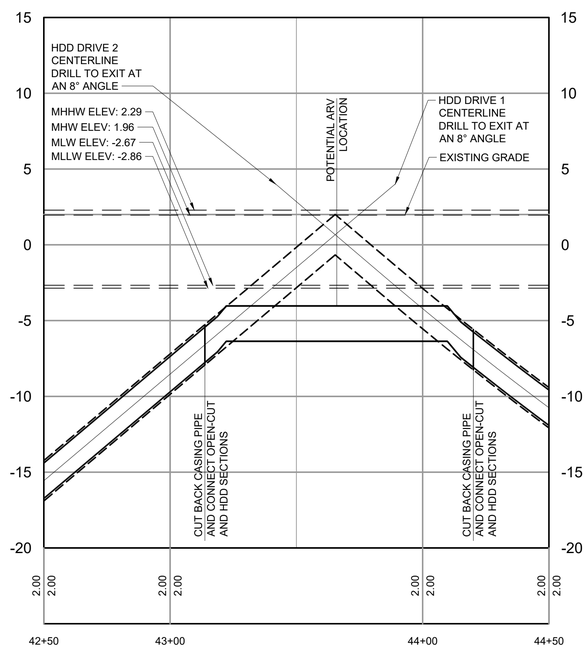

PROFILE

HORIZONTAL SCALE: 1" = 30'
VERTICAL SCALE: 1"=5'

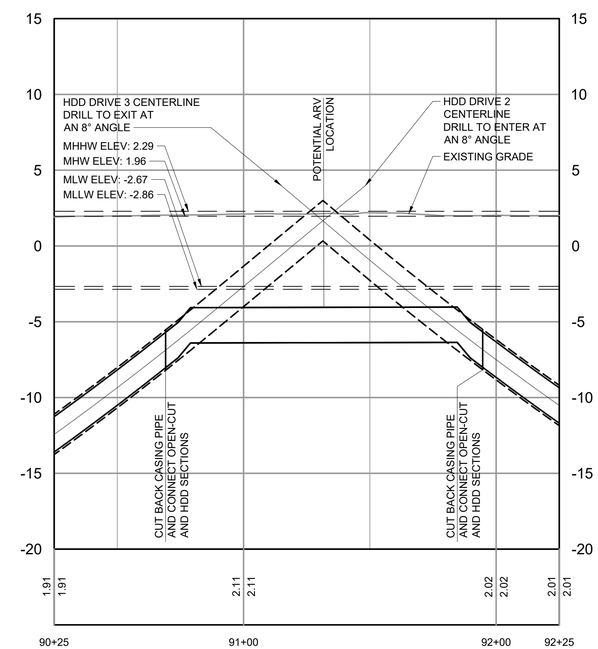

PROFILE

HORIZONTAL SCALE: 1" = 30'
VERTICAL SCALE: 1"=5'

SCALE: 1" = 5' 5 2.5 0 5'

SCALE: 1" = 30' 30 15 0 30'

WARNING
IT IS A VIOLATION OF SECTION 7209.2 OF THE NEW YORK STATE EDUCATION LAW FOR ANY PERSON, UNLESS ACTING UNDER THE DIRECTION OF A LICENSED PROFESSIONAL ENGINEER, TO ALTER IN ANY WAY PLANS, SPECIFICATIONS, PLATS OR REPORTS TO WHICH THE SEAL OF A PROFESSIONAL ENGINEER HAS BEEN APPLIED. IF AN ITEM BEARING THE SEAL OF A PROFESSIONAL ENGINEER IS ALTERED, THE ALTERING ENGINEER SHALL AFFIX TO THE ITEM HIS SEAL AND THE NOTATION "ALTERED BY" FOLLOWED BY HIS SIGNATURE, THE DATE, AND A SPECIFIC DESCRIPTION OF THE ALTERATION.

File = Q:\90500-000-NYC\Drawings\535109-015\Civil\C-012 Saved by wallace Save date = 6/4/2020 3:34 PM
PLOT DATE: 6/4/2020 5:28 PM BY: WALLACE

Hazen
ARCADIS
LEGAL ENTITY: MALCOLM PIRNIE, INC.
A JOINT VENTURE

SEALS

DO NOT USE FOR CONSTRUCTION

COUNTY OF NASSAU, NEW YORK
DEPARTMENT OF PUBLIC WORKS

LONG BEACH WPCP CONSOLIDATION FORCE MAIN

NO.	DATE	ISSUED FOR	BY

COPYRIGHT: 2020 HAZEN AND SAWYER/ ARCADIS A JOINT VENTURE

DATE: JUNE 2020
PROJECT NO.: H&S 90500-000
FILE NAME: C-012
DESIGNED BY: L. WALLACE
DRAWN BY: K. ROBBINS
CHECKED BY: D. SHEERAN

SHEET TITLE

CIVIL

HDD CONNECTION INSETS AND PROFILES

SCALE: AS SHOWN

SHEET 15 OF 59

NOTES:

1. THE EXISTING SHEETING WAS DRAWN FROM RECORDS PROVIDED BY THE CITY OF LONG BEACH. THE CONTRACTOR SHALL REMOVE ALL EXISTING SHEETING THAT INTERFERES WITH THE RELOCATION OF THE UTILITIES AS SHOWN ON THIS DRAWING.

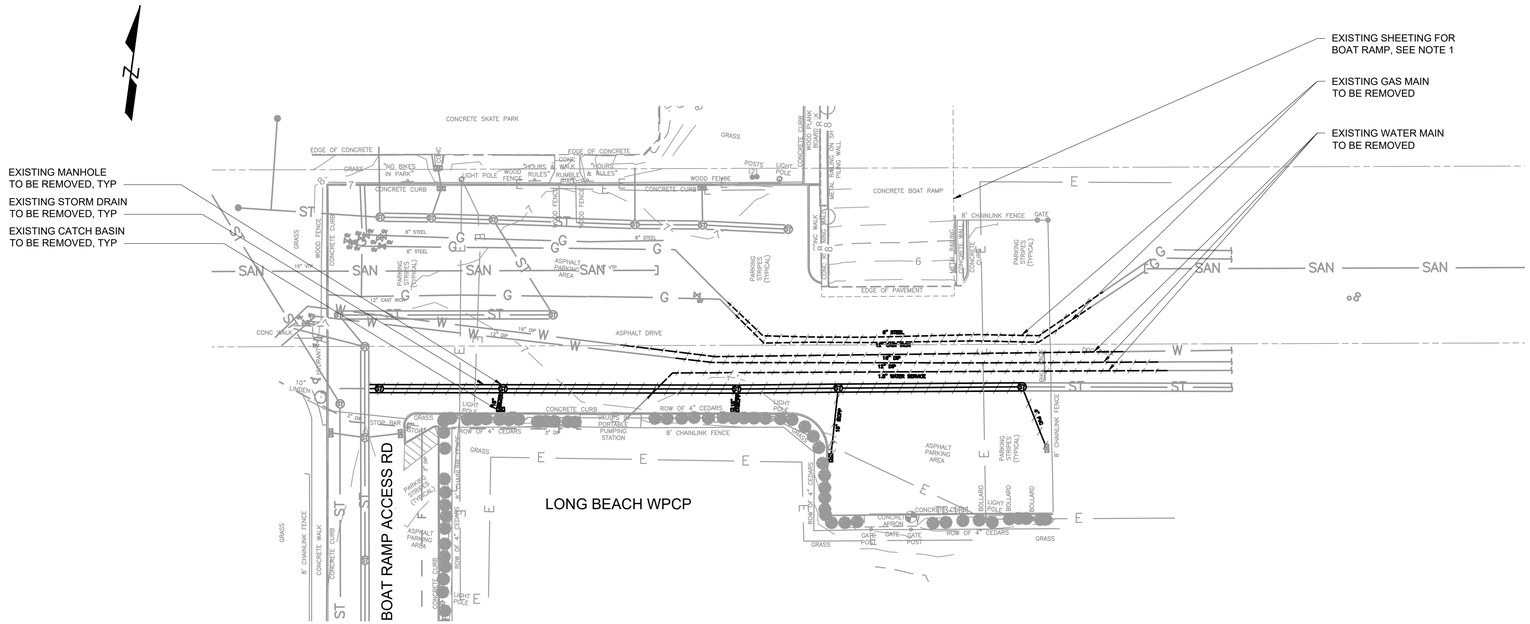

EXISTING AND DEMOLITION PLAN

SCALE: 1" = 30'

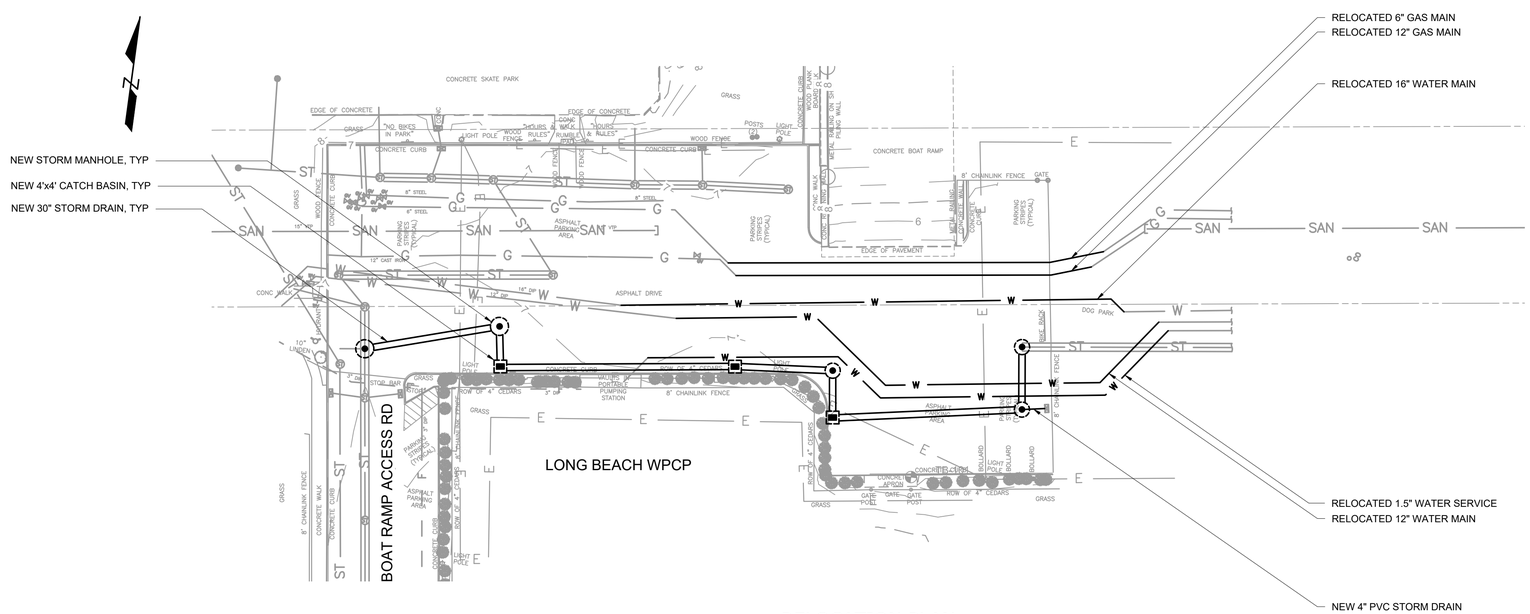

RELOCATION PLAN

SCALE: 1" = 30'

WARNING
IT IS A VIOLATION OF SECTION 7209.2 OF THE NEW YORK STATE EDUCATION LAW FOR ANY PERSON, UNLESS ACTING UNDER THE DIRECTION OF A LICENSED PROFESSIONAL ENGINEER, TO ALTER IN ANY WAY PLANS, SPECIFICATIONS, PLATS OR REPORTS TO WHICH THE SEAL OF A PROFESSIONAL ENGINEER HAS BEEN APPLIED. IF AN ITEM BEARING THE SEAL OF A PROFESSIONAL ENGINEER IS ALTERED, THE ALTERING ENGINEER SHALL AFFIX TO THE ITEM HIS SEAL AND THE NOTATION "ALTERED BY" FOLLOWED BY HIS SIGNATURE, THE DATE, AND A SPECIFIC DESCRIPTION OF THE ALTERATION.

SCALE: 1" = 30' 30 15 0 30'

Hazen
ARCADIS
LEGAL ENTITY: MALCOLM PIRNIE, INC.
A JOINT VENTURE

SEALS

DO NOT USE FOR CONSTRUCTION

COUNTY OF NASSAU, NEW YORK
DEPARTMENT OF PUBLIC WORKS

LONG BEACH WPCP CONSOLIDATION FORCE MAIN

NO.	DATE	ISSUED FOR	BY

COPYRIGHT: 2020 HAZEN AND SAWYER/ ARCADIS A JOINT VENTURE

DATE: JUNE 2020
PROJECT NO.: H&S 90500-000
FILE NAME: C-101
DESIGNED BY: L. WALLACE
DRAWN BY: L. WALLACE
CHECKED BY: D. SHEERAN

SHEET TITLE

CIVIL

LONG BEACH UTILITY RELOCATIONS – PLAN VIEWS

SCALE: AS SHOWN

SHEET 16 OF 59

File = Q:\90500-000-NYC\Drawings\535109-01T5\Civil\C-101 Saved by lwallace Save date = 6/3/2020 12:22 PM
PLOT DATE: 6/4/2020 6:26 PM BY: LWALLACE

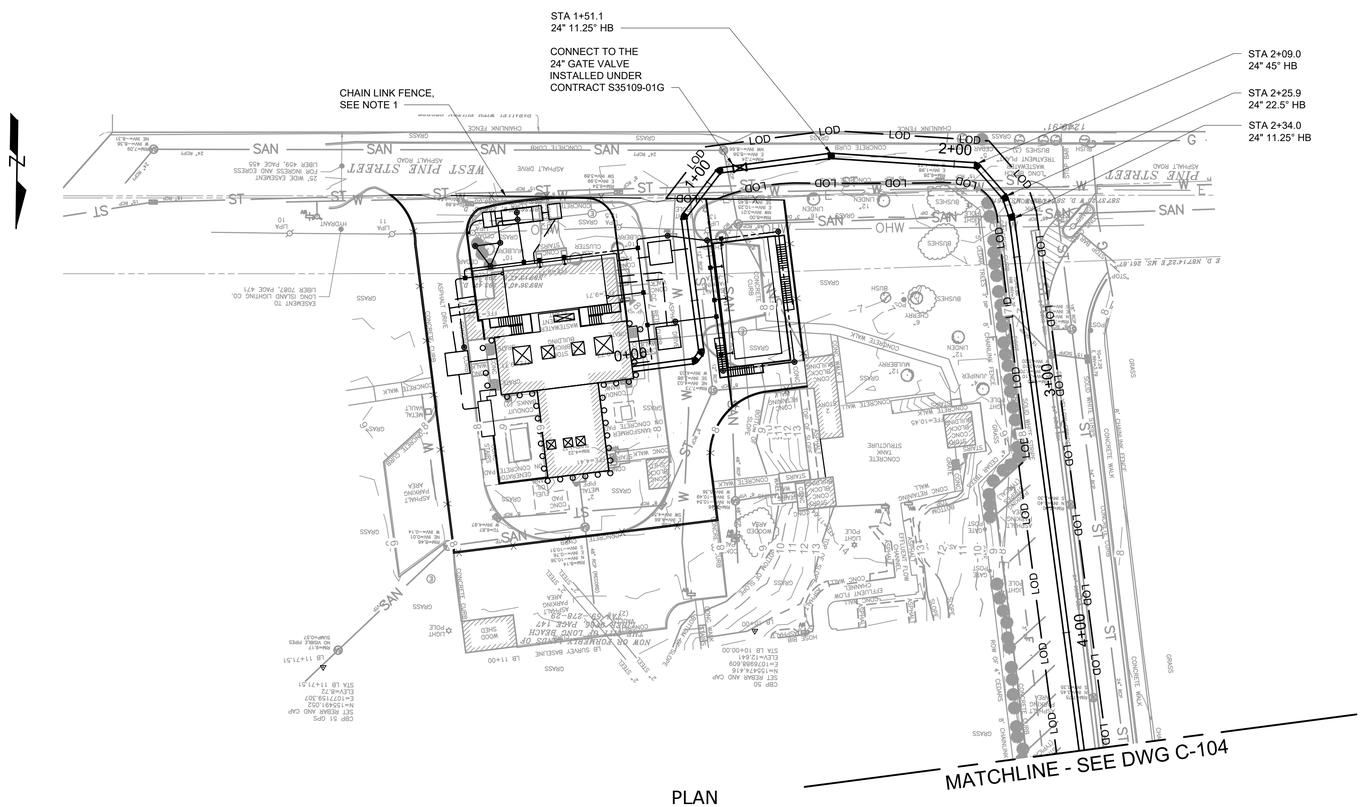

PLAN

SCALE: 1" = 30'

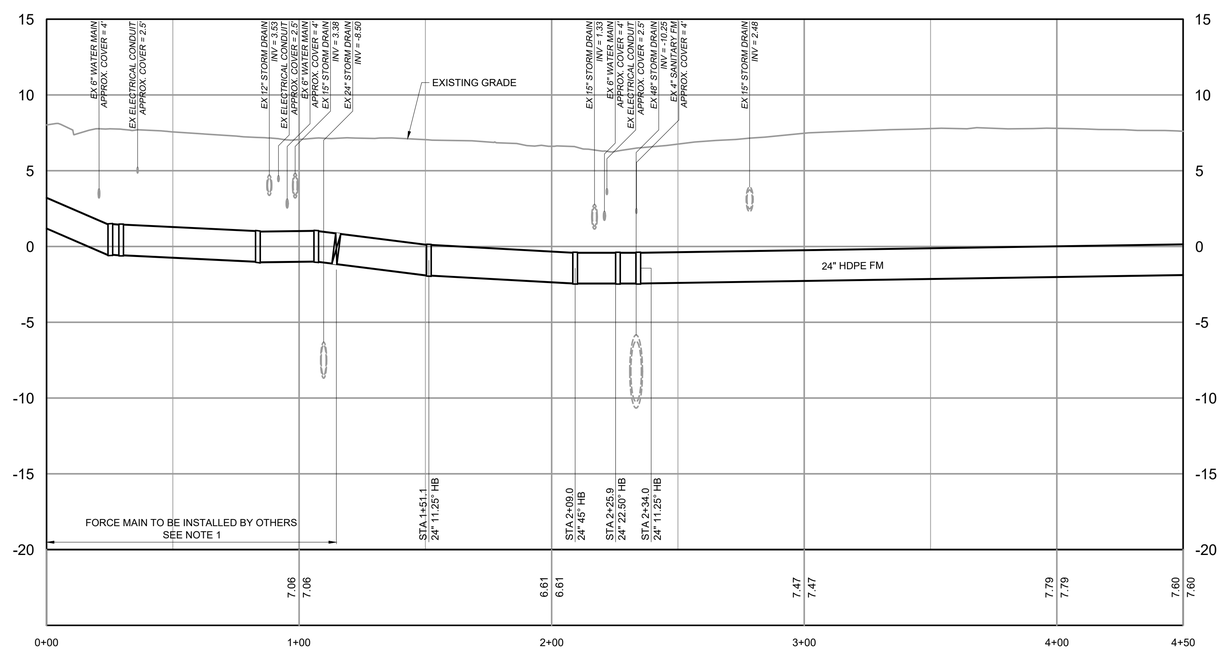

PROFILE

HORIZONTAL SCALE: 1" = 30'
VERTICAL SCALE: 1"=5'

NOTES

1. SEE DRAWINGS FOR CONTRACT S35109-01G FOR CONSTRUCTION INSIDE THE CHAIN LINK FENCE AND FOR THE DESIGN AND CONSTRUCTION OF THE FORCE MAIN FROM THE PUMP STATION TO THE 24" GATE VALVE.

WARNING
IT IS A VIOLATION OF SECTION 7209.2 OF THE NEW YORK STATE EDUCATION LAW FOR ANY PERSON, UNLESS ACTING UNDER THE DIRECTION OF A LICENSED PROFESSIONAL ENGINEER, TO ALTER IN ANY WAY PLANS, SPECIFICATIONS, PLATS OR REPORTS TO WHICH THE SEAL OF A PROFESSIONAL ENGINEER HAS BEEN APPLIED. IF AN ITEM BEARING THE SEAL OF A PROFESSIONAL ENGINEER IS ALTERED, THE ALTERING ENGINEER SHALL AFFIX TO THE ITEM HIS SEAL AND THE NOTATION "ALTERED BY" FOLLOWED BY HIS SIGNATURE, THE DATE, AND A SPECIFIC DESCRIPTION OF THE ALTERATION.

SCALE: 1" = 5' 5 2.5 0 5'

SCALE: 1" = 30' 30 15 0 30'

Hazen
ARCADIS
LEGAL ENTITY: MALCOLM PIRNIE, INC.
A JOINT VENTURE

SEALS

DO NOT USE FOR CONSTRUCTION

COUNTY OF NASSAU, NEW YORK
DEPARTMENT OF PUBLIC WORKS

LONG BEACH WPCP CONSOLIDATION FORCE MAIN

NO.	DATE	ISSUED FOR	BY

COPYRIGHT: 2020 HAZEN AND SAWYER/ ARCADIS A JOINT VENTURE

DATE: JUNE 2020
PROJECT NO.: H&S 90500-000
FILE NAME: C-103
DESIGNED BY: L. WALLACE
DRAWN BY: K. ROBBINS
CHECKED BY: D. SHEERAN

SHEET TITLE

CIVIL

FORCE MAIN PLAN AND PROFILE – SHEET 1

SCALE: AS SHOWN

SHEET 18 OF 59

File = Q:\90500-000-NYC\Drawings\S35109-01TS\Civil\C-103 Saved by wallace Save date = 6/4/2020 2:30 PM
PLOT DATE: 6/4/2020 5:31 PM BY: LWALLACE

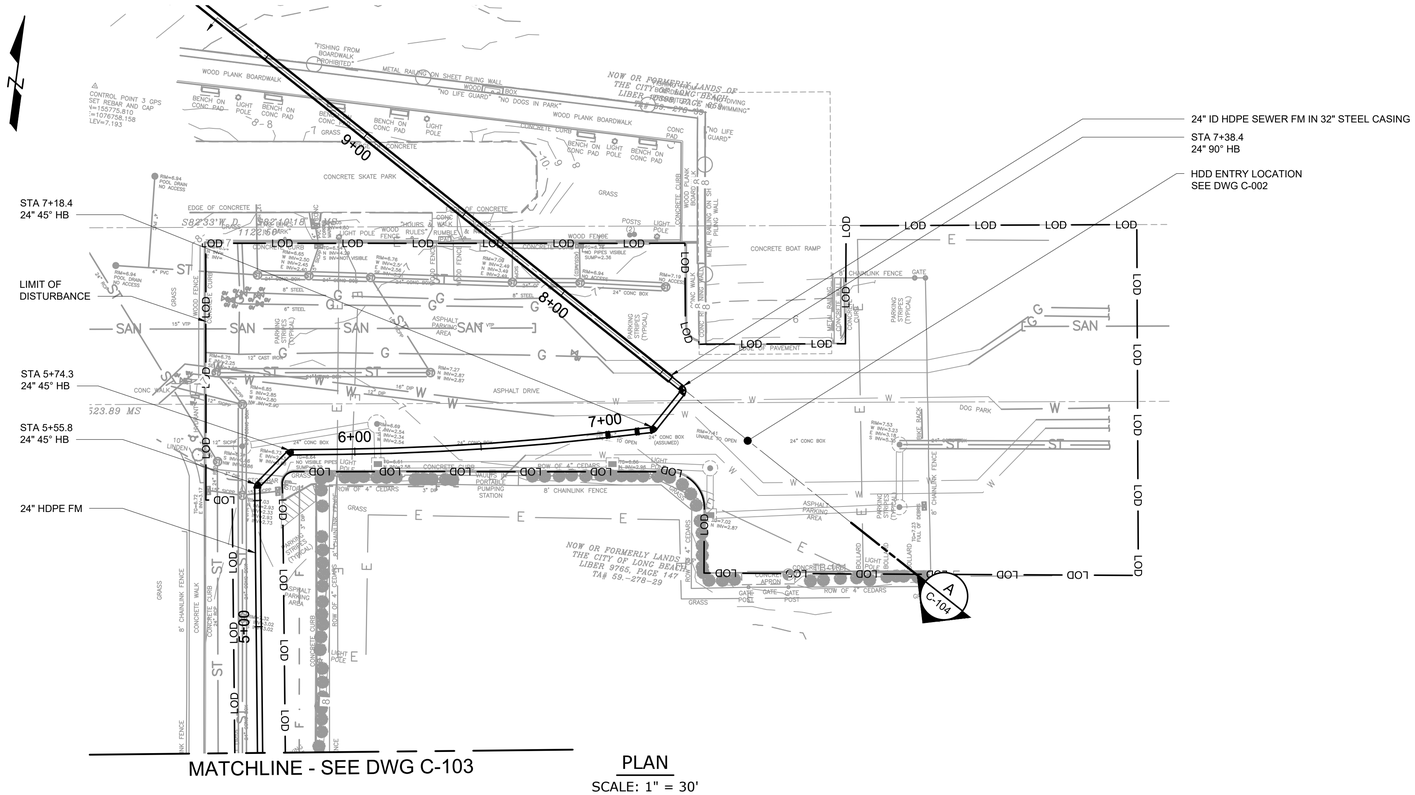

PLAN

SCALE: 1" = 30'

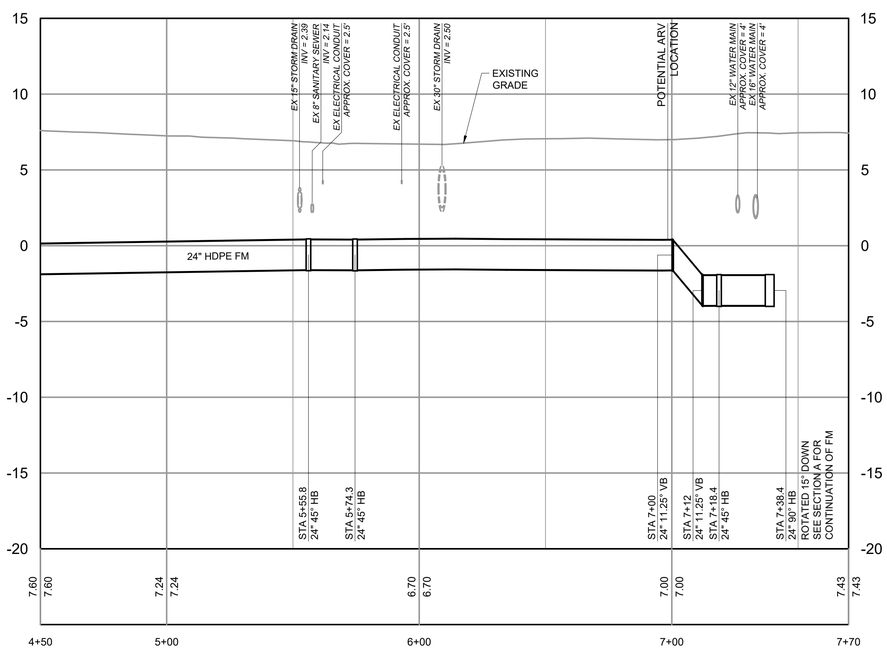

PROFILE

HORIZONTAL SCALE: 1" = 30'
VERTICAL SCALE: 1"=5'

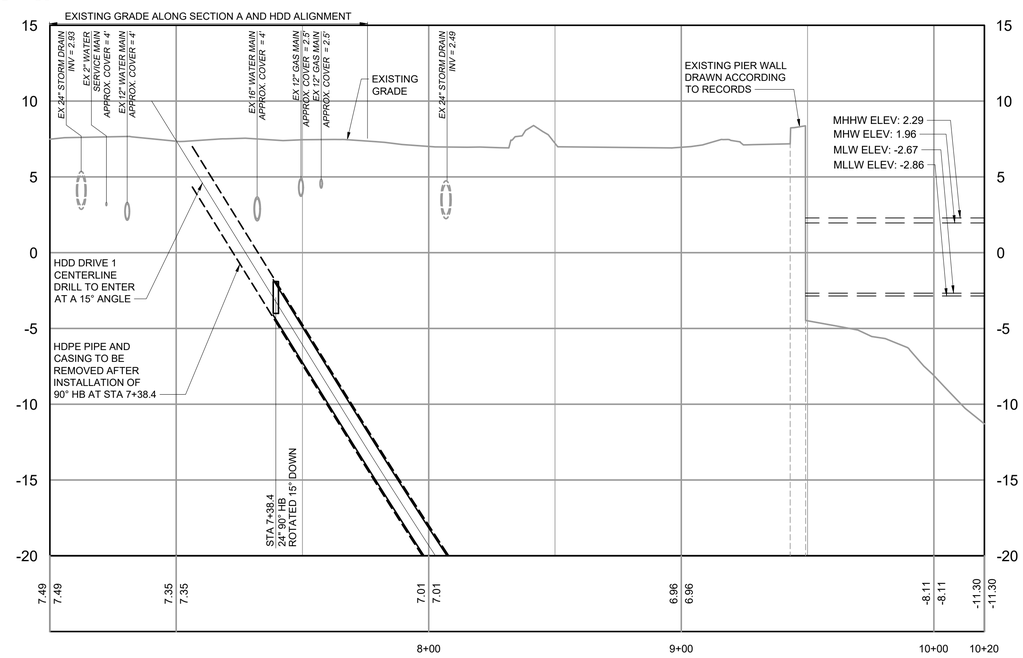

SECTION A

HORIZONTAL SCALE: 1" = 30'
VERTICAL SCALE: 1"=5'

SCALE: 1" = 5'

SCALE: 1" = 30'

WARNING
IT IS A VIOLATION OF SECTION 7209.2 OF THE NEW YORK STATE EDUCATION LAW FOR ANY PERSON, UNLESS ACTING UNDER THE DIRECTION OF A LICENSED PROFESSIONAL ENGINEER, TO ALTER IN ANY WAY PLANS, SPECIFICATIONS, PLATS OR REPORTS TO WHICH THE SEAL OF A PROFESSIONAL ENGINEER HAS BEEN APPLIED. IF AN ITEM BEARING THE SEAL OF A PROFESSIONAL ENGINEER IS ALTERED, THE ALTERING ENGINEER SHALL AFFIX TO THE ITEM HIS SEAL AND THE NOTATION "ALTERED BY" FOLLOWED BY HIS SIGNATURE, THE DATE, AND A SPECIFIC DESCRIPTION OF THE ALTERATION.

Hazen
ARCADIS
LEGAL ENTITY: MALCOLM PIRNIE, INC.
A JOINT VENTURE

SEALS

DO NOT USE FOR CONSTRUCTION

COUNTY OF NASSAU, NEW YORK
DEPARTMENT OF PUBLIC WORKS

LONG BEACH WPCP
CONSOLIDATION FORCE MAIN

NO.	DATE	ISSUED FOR	BY

COPYRIGHT: 2020 HAZEN AND SAWYER/ ARCADIS A JOINT VENTURE

DATE: JUNE 2020
PROJECT NO.: H&S 90500-000
FILE NAME: C-104
DESIGNED BY: L. WALLACE
DRAWN BY: K. ROBBINS
CHECKED BY: D. SHEERAN

SHEET TITLE

CIVIL

FORCE MAIN PLAN AND PROFILE – SHEET 2

SCALE: AS SHOWN

SHEET 19 OF 59

File = G:\90500-000-NYC\Drwngs\535109-015\Civil\C-104 Saved by KRobbins Save date = 6/4/2020 2:47 PM
PLOT DATE: 6/4/2020 2:53 PM BY: LWALLACE

NOTES

1. CONTRACTOR SHALL PROTECT ALL EXISTING UTILITIES DURING CONSTRUCTION.
2. ABANDONED PIPES INTERFERING WITH THE NEW FORCE MAIN SHALL BE REMOVED FROM THE GROUND AND PROPERLY DISPOSED OF. CONTRACTOR SHALL ONLY REMOVE THE SECTIONS OF PIPE INTERFERING WITH THE CONSTRUCTION OF THE NEW FORCE MAIN.
3. SEE DWGS C-002 THROUGH C-004 FOR THE HDD SECTION OF THE FORCE MAIN.

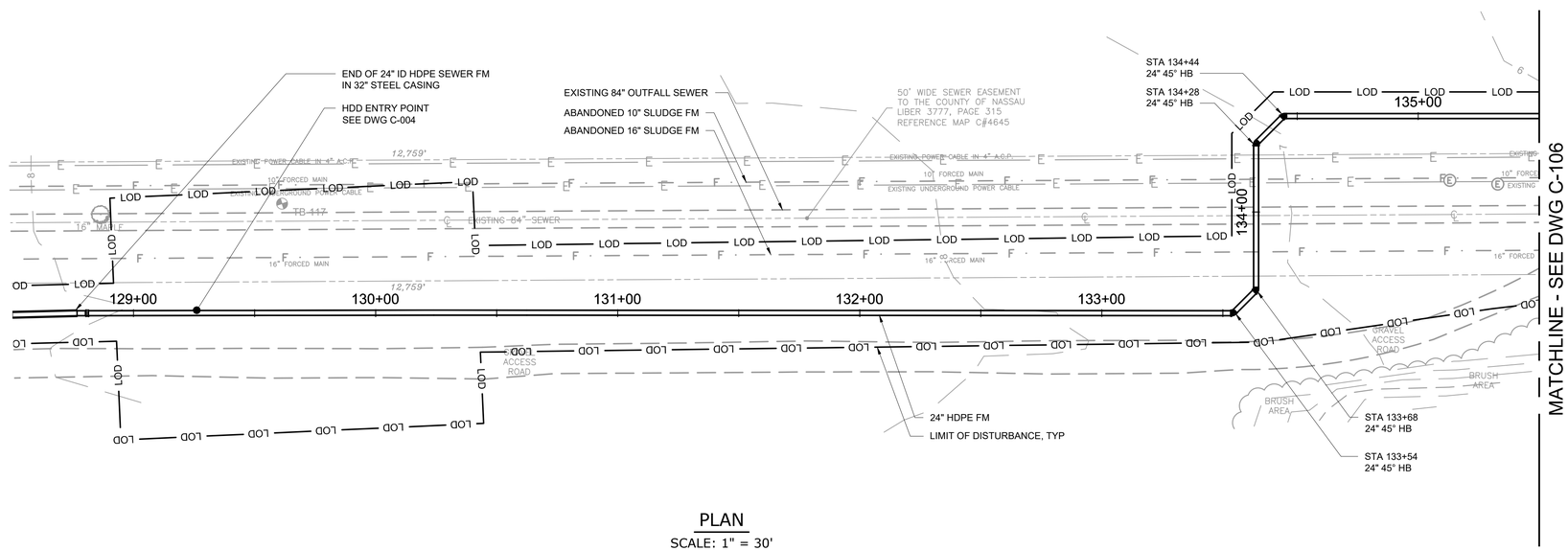

PLAN

SCALE: 1" = 30'

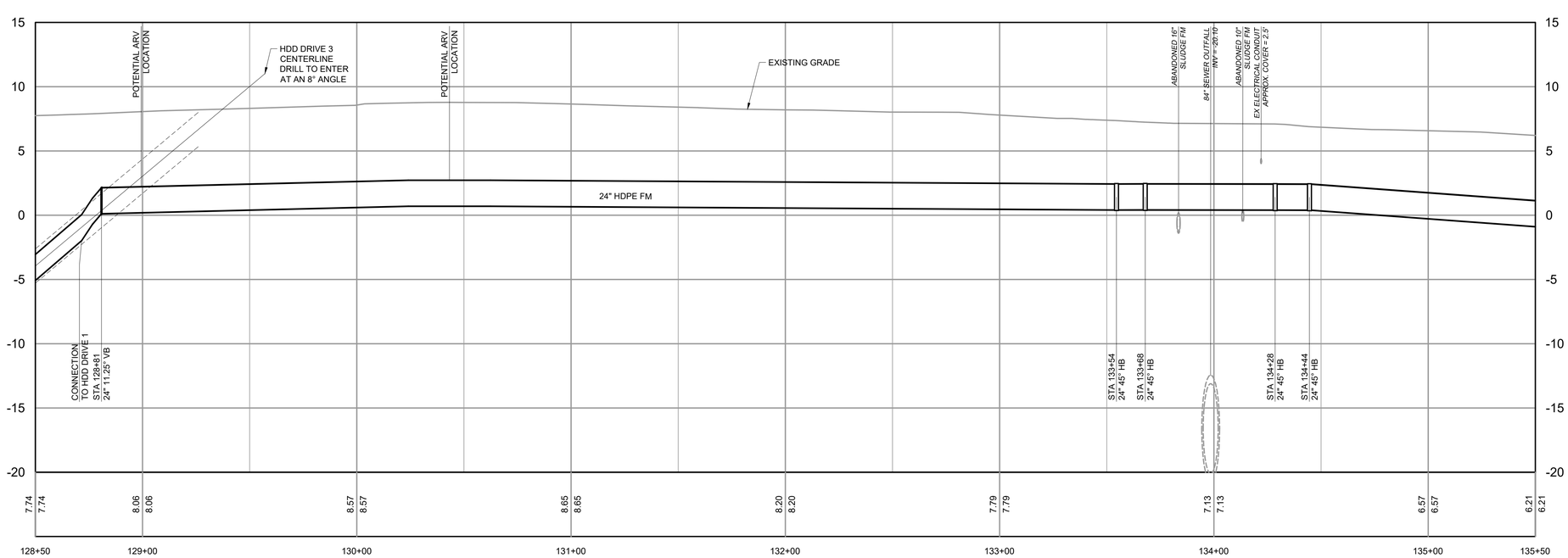

PROFILE

HORIZONTAL SCALE: 1" = 30'
VERTICAL SCALE: 1"=5'

SCALE: 1" = 5' 5 2.5 0 5'

SCALE: 1" = 30' 30 15 0 30'

WARNING
IT IS A VIOLATION OF SECTION 7209.2 OF THE NEW YORK STATE EDUCATION LAW FOR ANY PERSON, UNLESS ACTING UNDER THE DIRECTION OF A LICENSED PROFESSIONAL ENGINEER, TO ALTER IN ANY WAY PLANS, SPECIFICATIONS, PLATS OR REPORTS TO WHICH THE SEAL OF A PROFESSIONAL ENGINEER HAS BEEN APPLIED. IF AN ITEM BEARING THE SEAL OF A PROFESSIONAL ENGINEER IS ALTERED, THE ALTERING ENGINEER SHALL AFFIX TO THE ITEM HIS SEAL AND THE NOTATION "ALTERED BY" FOLLOWED BY HIS SIGNATURE, THE DATE, AND A SPECIFIC DESCRIPTION OF THE ALTERATION.

File = Q:\90500-000-NYC\Drawings\535109-015\Civil\C-105 Saved by KRobbins Save date = 6/4/2020 12:50 PM
PLOT DATE: 6/4/2020 6:22 PM BY: LWALLACE

Hazen
ARCADIS
LEGAL ENTITY: MALCOLM PIRNIE, INC.
A JOINT VENTURE

SEALS

DO NOT USE FOR CONSTRUCTION

COUNTY OF NASSAU, NEW YORK
DEPARTMENT OF PUBLIC WORKS

LONG BEACH WPCP CONSOLIDATION FORCE MAIN

NO.	DATE	ISSUED FOR	BY

COPYRIGHT: 2020 HAZEN AND SAWYER/ ARCADIS A JOINT VENTURE

DATE: JUNE 2020
PROJECT NO.: H&S 90500-000
FILE NAME: C-105
DESIGNED BY: L. WALLACE
DRAWN BY: K. ROBBINS
CHECKED BY: D. SHEERAN

SHEET TITLE

CIVIL

FORCE MAIN PLAN AND PROFILE – SHEET 3

SCALE: AS SHOWN

SHEET 20 OF 59

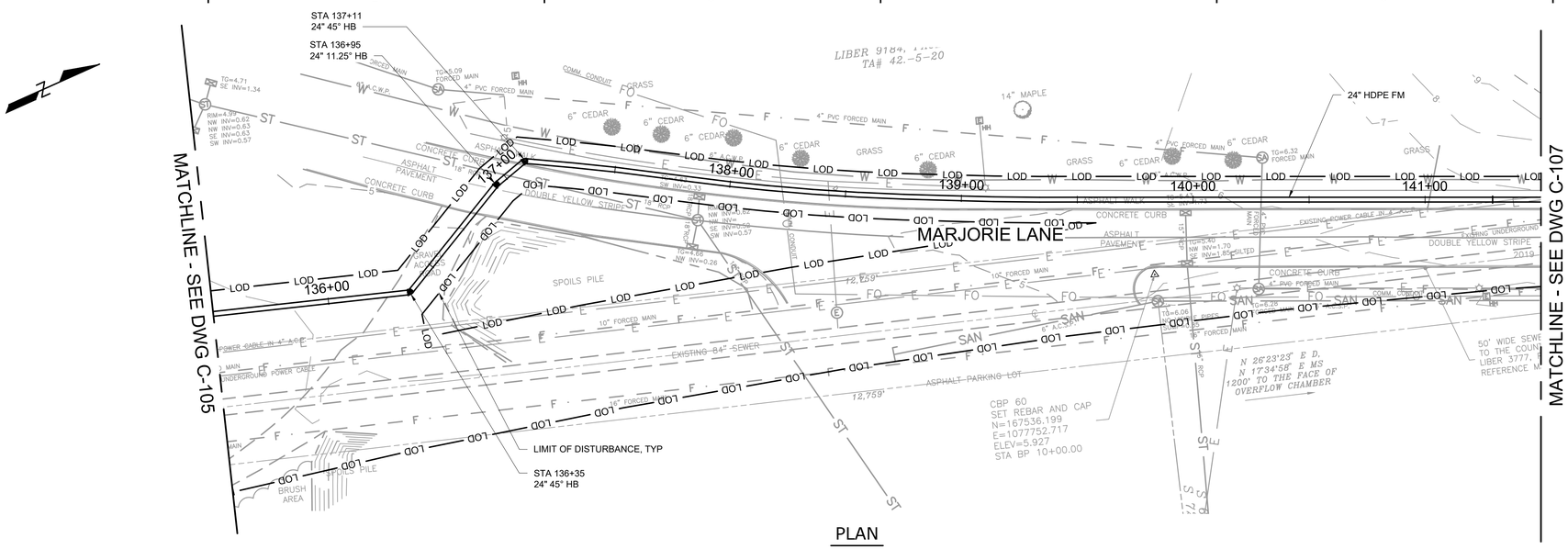

PLAN

SCALE: 1" = 30'

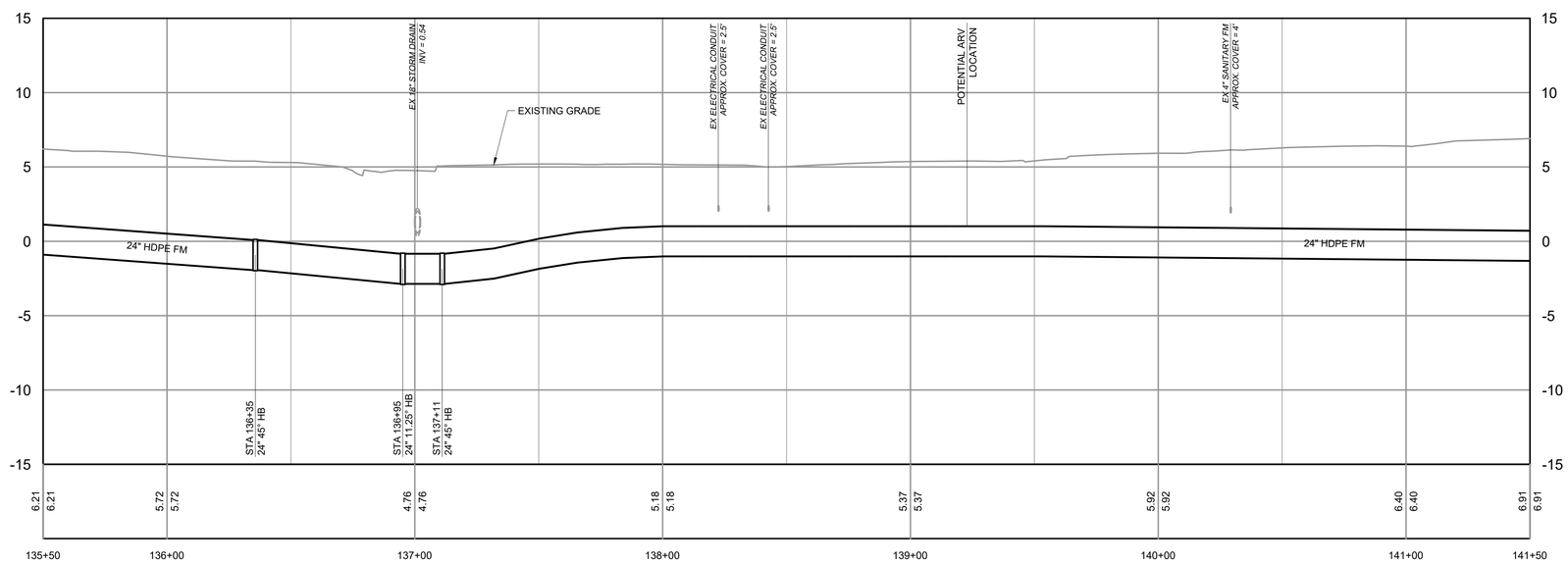

PROFILE

HORIZONTAL SCALE: 1" = 30'
VERTICAL SCALE: 1"=5'

NOTES

1. CONTRACTOR SHALL PROTECT ALL EXISTING UTILITIES DURING CONSTRUCTION.
2. ABANDONED PIPES INTERFERING WITH THE NEW FORCE MAIN SHALL BE REMOVED FROM THE GROUND AND PROPERLY DISPOSED OF. CONTRACTOR SHALL ONLY REMOVE THE SECTIONS OF PIPE INTERFERING WITH THE CONSTRUCTION OF THE NEW FORCE MAIN.

WARNING
IT IS A VIOLATION OF SECTION 7209.2 OF THE NEW YORK STATE EDUCATION LAW FOR ANY PERSON, UNLESS ACTING UNDER THE DIRECTION OF A LICENSED PROFESSIONAL ENGINEER, TO ALTER IN ANY WAY PLANS, SPECIFICATIONS, PLATS OR REPORTS TO WHICH THE SEAL OF A PROFESSIONAL ENGINEER HAS BEEN APPLIED. IF AN ITEM BEARING THE SEAL OF A PROFESSIONAL ENGINEER IS ALTERED, THE ALTERING ENGINEER SHALL AFFIX TO THE ITEM HIS SEAL AND THE NOTATION "ALTERED BY" FOLLOWED BY HIS SIGNATURE, THE DATE, AND A SPECIFIC DESCRIPTION OF THE ALTERATION.

SCALE: 1" = 5' — 5 2.5 0 5'
SCALE: 1" = 30' — 30 15 0 30'

Hazen
ARCADIS
LEGAL ENTITY: MALCOLM PIRNIE, INC.
A JOINT VENTURE

SEALS

DO NOT USE FOR CONSTRUCTION

COUNTY OF NASSAU, NEW YORK
DEPARTMENT OF PUBLIC WORKS

LONG BEACH WPCP CONSOLIDATION FORCE MAIN

NO.	DATE	ISSUED FOR	BY

COPYRIGHT: 2020 HAZEN AND SAWYER/ ARCADIS A JOINT VENTURE

DATE: JUNE 2020
PROJECT NO.: H&S 90500-000
FILE NAME: C-106
DESIGNED BY: L. WALLACE
DRAWN BY: K. ROBBINS
CHECKED BY: D. SHEERAN

SHEET TITLE

CIVIL

FORCE MAIN PLAN AND PROFILE – SHEET 4

SCALE: AS SHOWN

SHEET 21 OF 59

File = Q:\90500-000-NYC\Drawings\535109-01T\Civil\C-106 Saved by RRobbins Save date = 6/4/2020 12:53 PM
PLOT DATE: 6/4/2020 5:37 PM BY: LWALLACE

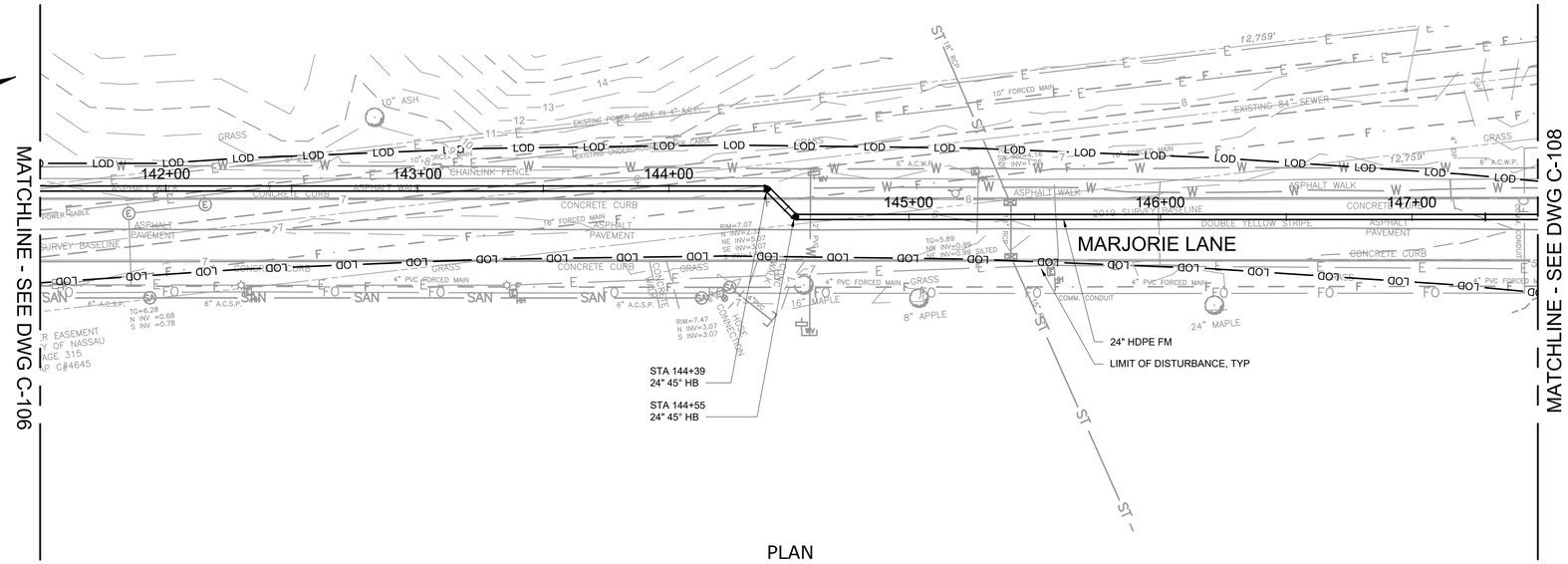

PLAN

SCALE: 1" = 30'

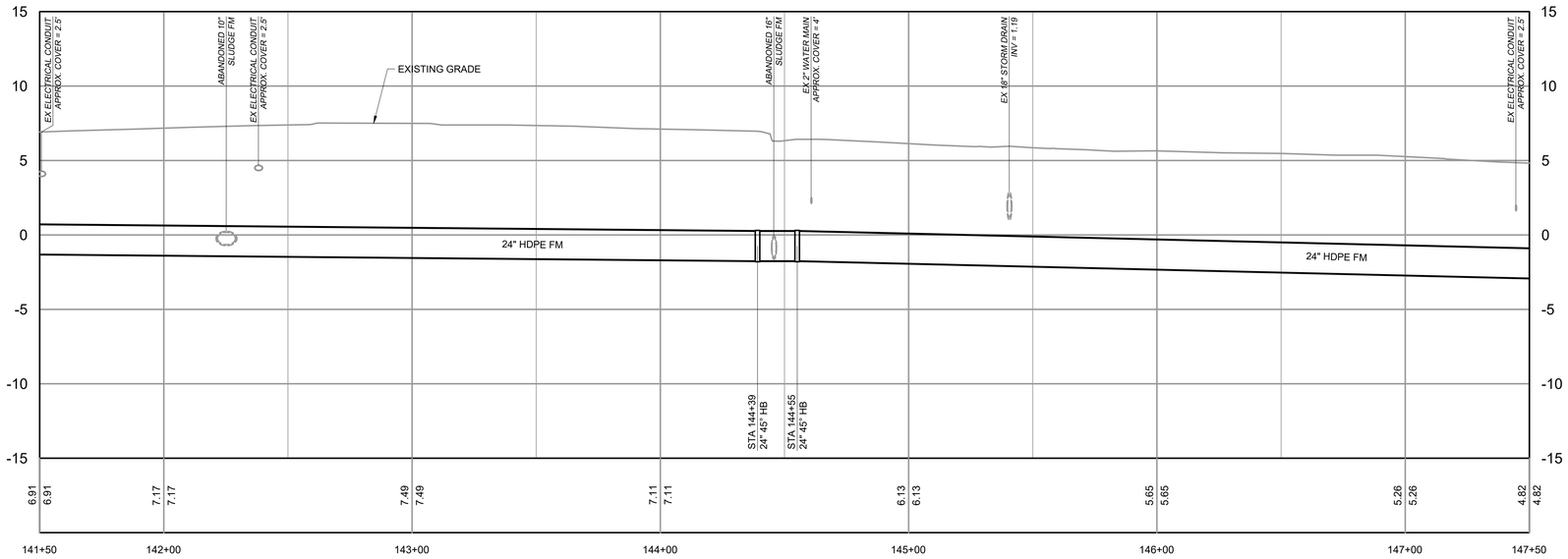

PROFILE

HORIZONTAL SCALE: 1" = 30'
VERTICAL SCALE: 1"=5'

NOTES

1. CONTRACTOR SHALL PROTECT ALL EXISTING UTILITIES DURING CONSTRUCTION.
2. ABANDONED PIPES INTERFERING WITH THE NEW FORCE MAIN SHALL BE REMOVED FROM THE GROUND AND PROPERLY DISPOSED OF. CONTRACTOR SHALL ONLY REMOVE THE SECTIONS OF PIPE INTERFERING WITH THE CONSTRUCTION OF THE NEW FORCE MAIN.

Hazen
ARCADIS
LEGAL ENTITY: MALCOLM PIRNIE, INC.
A JOINT VENTURE

SEALS

DO NOT USE FOR CONSTRUCTION

COUNTY OF NASSAU, NEW YORK
DEPARTMENT OF PUBLIC WORKS

LONG BEACH WPCP CONSOLIDATION FORCE MAIN

NO.	DATE	ISSUED FOR	BY

COPYRIGHT: 2020 HAZEN AND SAWYER/ ARCADIS A JOINT VENTURE

DATE: JUNE 2020
PROJECT NO.: H&S 90500-000
FILE NAME: C-107
DESIGNED BY: L. WALLACE
DRAWN BY: K. ROBBINS
CHECKED BY: D. SHEERAN

SHEET TITLE

CIVIL

FORCE MAIN PLAN AND PROFILE – SHEET 5

SCALE: AS SHOWN

SHEET 22 OF 59

SCALE: 1" = 5' (5 2.5 0 5')
SCALE: 1" = 30' (30 15 0 30')

WARNING
IT IS A VIOLATION OF SECTION 7209.2 OF THE NEW YORK STATE EDUCATION LAW FOR ANY PERSON, UNLESS ACTING UNDER THE DIRECTION OF A LICENSED PROFESSIONAL ENGINEER, TO ALTER IN ANY WAY PLANS, SPECIFICATIONS, PLATS OR REPORTS TO WHICH THE SEAL OF A PROFESSIONAL ENGINEER HAS BEEN APPLIED. IF AN ITEM BEARING THE SEAL OF A PROFESSIONAL ENGINEER IS ALTERED, THE ALTERING ENGINEER SHALL AFFIX TO THE ITEM HIS SEAL AND THE NOTATION "ALTERED BY" FOLLOWED BY HIS SIGNATURE, THE DATE, AND A SPECIFIC DESCRIPTION OF THE ALTERATION.

File = O:\90500-000-NYC\Drawings\535109-015\Civil\C-107 Saved by kRobbins. Save date = 6/4/2020 12:55 PM
PLOT DATE: 6/4/2020 5:39 PM BY: LWALLACE

NOTES

1. CONTRACTOR SHALL PROTECT ALL EXISTING UTILITIES DURING CONSTRUCTION.
2. ABANDONED PIPES INTERFERING WITH THE NEW FORCE MAIN SHALL BE REMOVED FROM THE GROUND AND PROPERLY DISPOSED OF. CONTRACTOR SHALL ONLY REMOVE THE SECTIONS OF PIPE INTERFERING WITH THE CONSTRUCTION OF THE NEW FORCE MAIN.

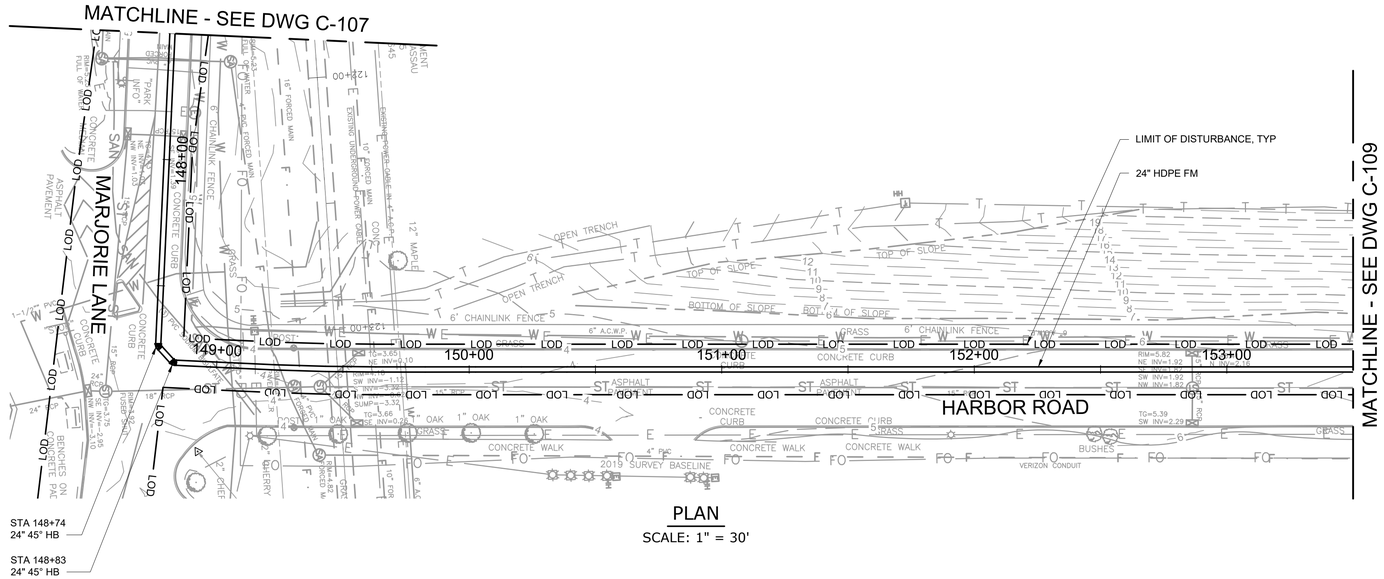

PLAN

SCALE: 1" = 30'

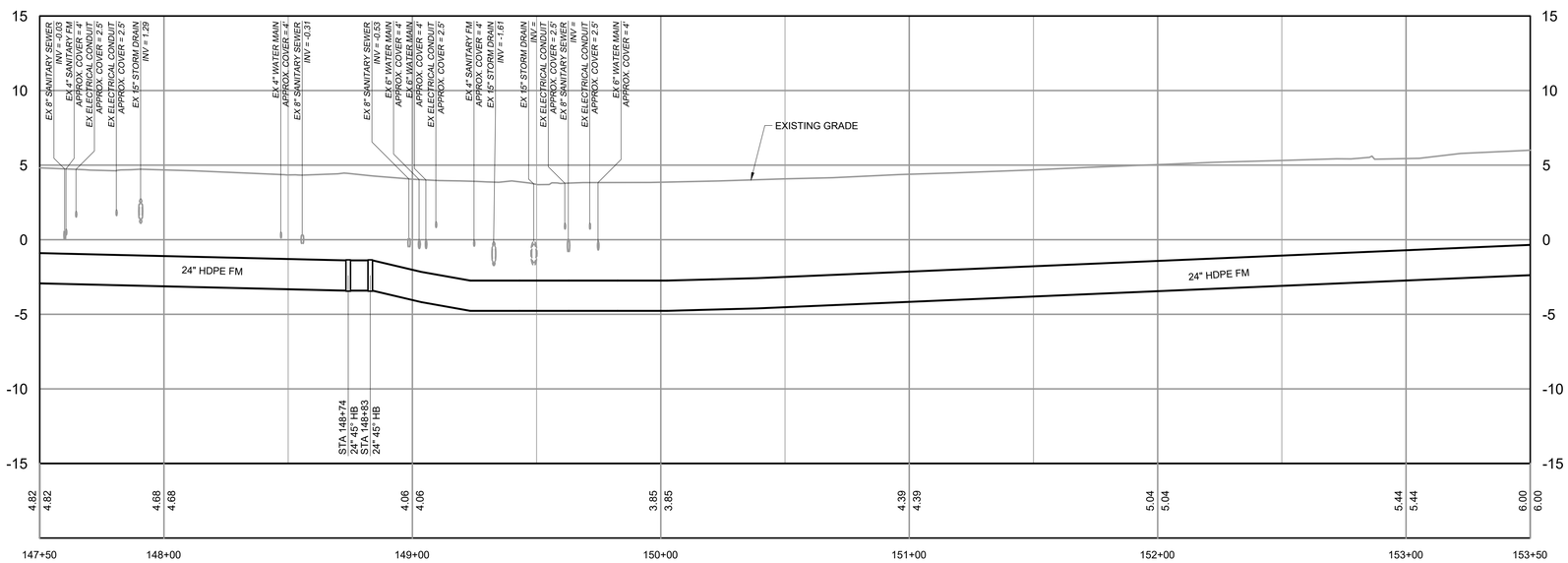

PROFILE

HORIZONTAL SCALE: 1" = 30'
VERTICAL SCALE: 1"=5'

WARNING
IT IS A VIOLATION OF SECTION 7209.2 OF THE NEW YORK STATE EDUCATION LAW FOR ANY PERSON, UNLESS ACTING UNDER THE DIRECTION OF A LICENSED PROFESSIONAL ENGINEER, TO ALTER IN ANY WAY PLANS, SPECIFICATIONS, PLATS OR REPORTS TO WHICH THE SEAL OF A PROFESSIONAL ENGINEER HAS BEEN APPLIED. IF AN ITEM BEARING THE SEAL OF A PROFESSIONAL ENGINEER IS ALTERED, THE ALTERING ENGINEER SHALL AFFIX TO THE ITEM HIS SEAL AND THE NOTATION "ALTERED BY" FOLLOWED BY HIS SIGNATURE, THE DATE, AND A SPECIFIC DESCRIPTION OF THE ALTERATION.

SCALE: 1" = 5' 5 2.5 0 5'

SCALE: 1" = 30' 30 15 0 30'

Hazen
ARCADIS
LEGAL ENTITY: MALCOLM PIRNIE, INC.
A JOINT VENTURE

SEALS

DO NOT USE FOR CONSTRUCTION

COUNTY OF NASSAU, NEW YORK
DEPARTMENT OF PUBLIC WORKS

LONG BEACH WPCP CONSOLIDATION FORCE MAIN

NO.	DATE	ISSUED FOR	BY

COPYRIGHT: 2020 HAZEN AND SAWYER/ ARCADIS A JOINT VENTURE

DATE: JUNE 2020
PROJECT NO.: H&S 90500-000
FILE NAME: C-108
DESIGNED BY: L. WALLACE
DRAWN BY: K. ROBBINS
CHECKED BY: D. SHEERAN

SHEET TITLE

CIVIL

FORCE MAIN PLAN AND PROFILE – SHEET 6

SCALE: AS SHOWN

SHEET 23 OF 59

File = Q:\90500-000-NYC\Drawings\535109-015\Civil\C-108 Saved by KRobbins Save date = 6/4/2020 12:59 PM
PLOT DATE: 6/4/2020 5:45 PM BY: LWALLACE

NOTES

1. CONTRACTOR SHALL PROTECT ALL EXISTING UTILITIES DURING CONSTRUCTION.
2. ABANDONED PIPES INTERFERING WITH THE NEW FORCE MAIN SHALL BE REMOVED FROM THE GROUND AND PROPERLY DISPOSED OF. CONTRACTOR SHALL ONLY REMOVE THE SECTIONS OF PIPE INTERFERING WITH THE CONSTRUCTION OF THE NEW FORCE MAIN.

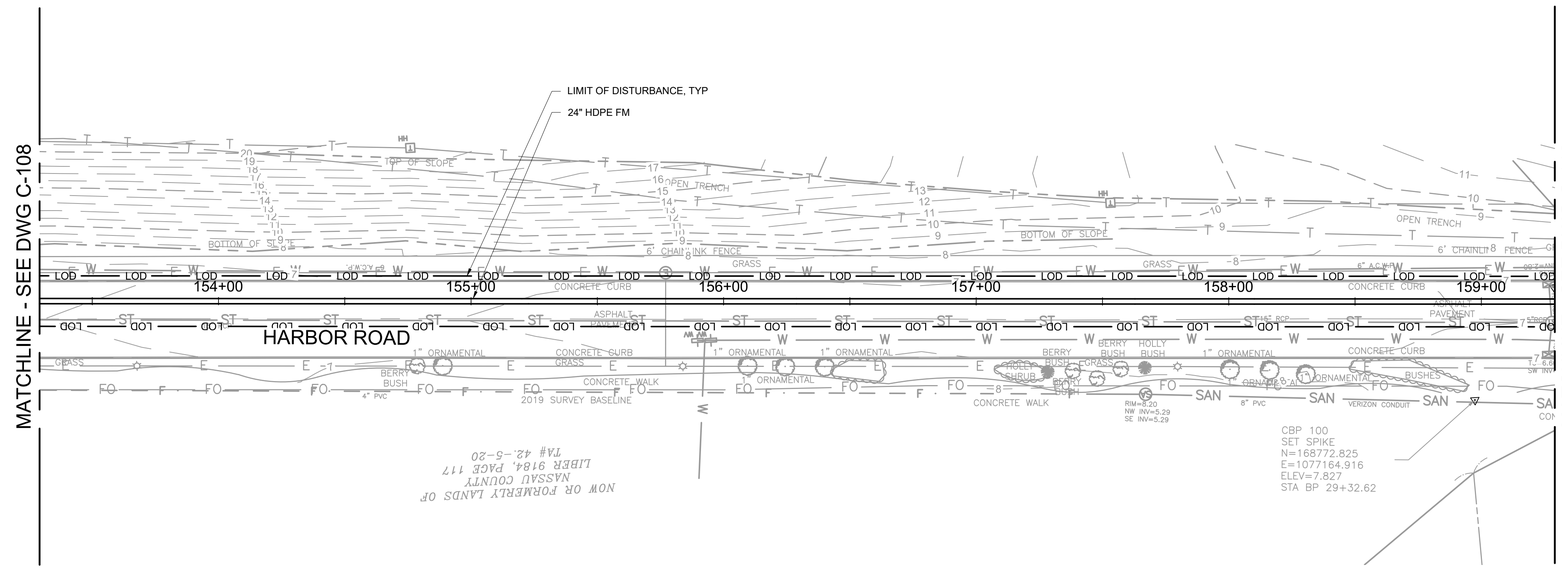

PLAN

SCALE: 1" = 30'

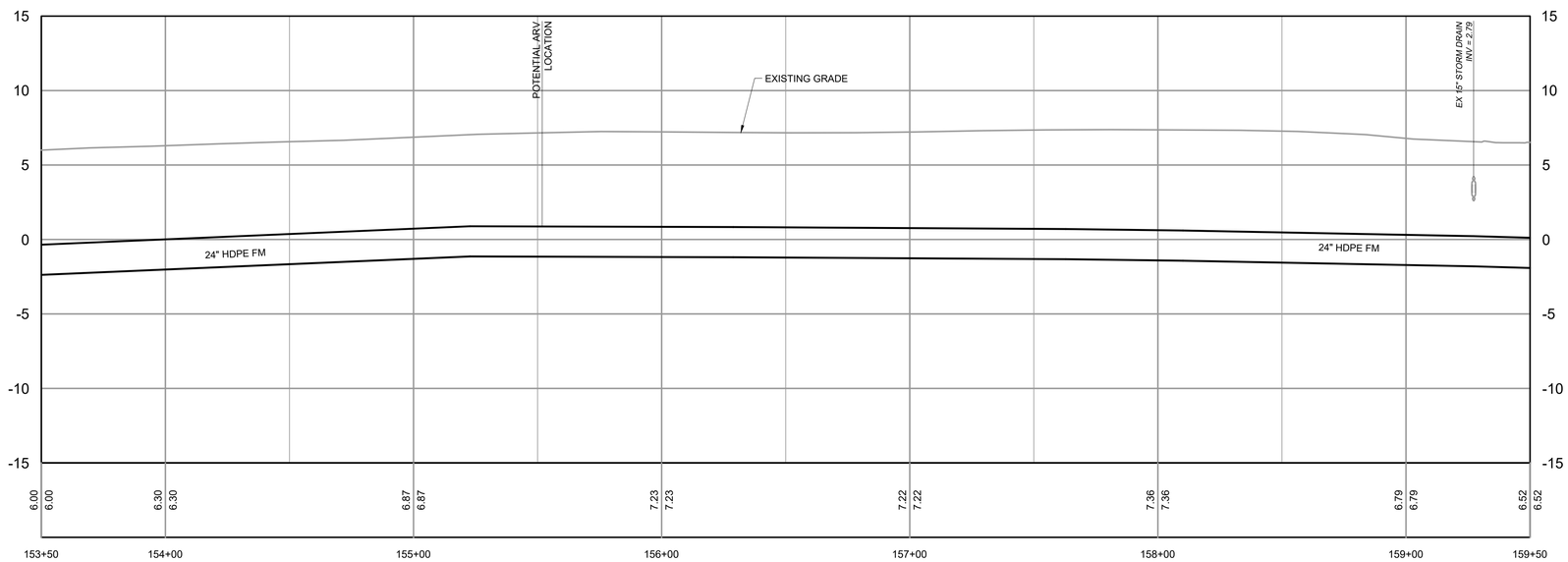

PROFILE

HORIZONTAL SCALE: 1" = 30'
VERTICAL SCALE: 1"=5'

SCALE: 1" = 5' 5 2.5 0 5'

SCALE: 1" = 30' 30 15 0 30'

WARNING
IT IS A VIOLATION OF SECTION 7209.2 OF THE NEW YORK STATE EDUCATION LAW FOR ANY PERSON, UNLESS ACTING UNDER THE DIRECTION OF A LICENSED PROFESSIONAL ENGINEER, TO ALTER IN ANY WAY PLANS, SPECIFICATIONS, PLATS OR REPORTS TO WHICH THE SEAL OF A PROFESSIONAL ENGINEER HAS BEEN APPLIED. IF AN ITEM BEARING THE SEAL OF A PROFESSIONAL ENGINEER IS ALTERED, THE ALTERING ENGINEER SHALL AFFIX TO THE ITEM HIS SEAL AND THE NOTATION "ALTERED BY" FOLLOWED BY HIS SIGNATURE, THE DATE, AND A SPECIFIC DESCRIPTION OF THE ALTERATION.

File = Q:\90500-000-NYC\Drawings\535109-015\Civil\C-109 Saved by KRobbins Save date = 6/4/2020 1:18 PM
PLOT DATE: 6/4/2020 5:42 PM BY: LWALLACE

Hazen
ARCADIS
LEGAL ENTITY: MALCOLM PIRNIE, INC.
A JOINT VENTURE

SEALS

DO NOT USE FOR CONSTRUCTION

COUNTY OF NASSAU, NEW YORK
DEPARTMENT OF PUBLIC WORKS

LONG BEACH WPCP CONSOLIDATION FORCE MAIN

NO.	DATE	ISSUED FOR	BY

COPYRIGHT: 2020 HAZEN AND SAWYER/ ARCADIS A JOINT VENTURE

DATE: JUNE 2020
PROJECT NO.: H&S 90500-000
FILE NAME: C-109
DESIGNED BY: L. WALLACE
DRAWN BY: K. ROBBINS
CHECKED BY: D. SHEERAN

SHEET TITLE

CIVIL

FORCE MAIN PLAN AND PROFILE – SHEET 7

SCALE: AS SHOWN

SHEET 24 OF 59

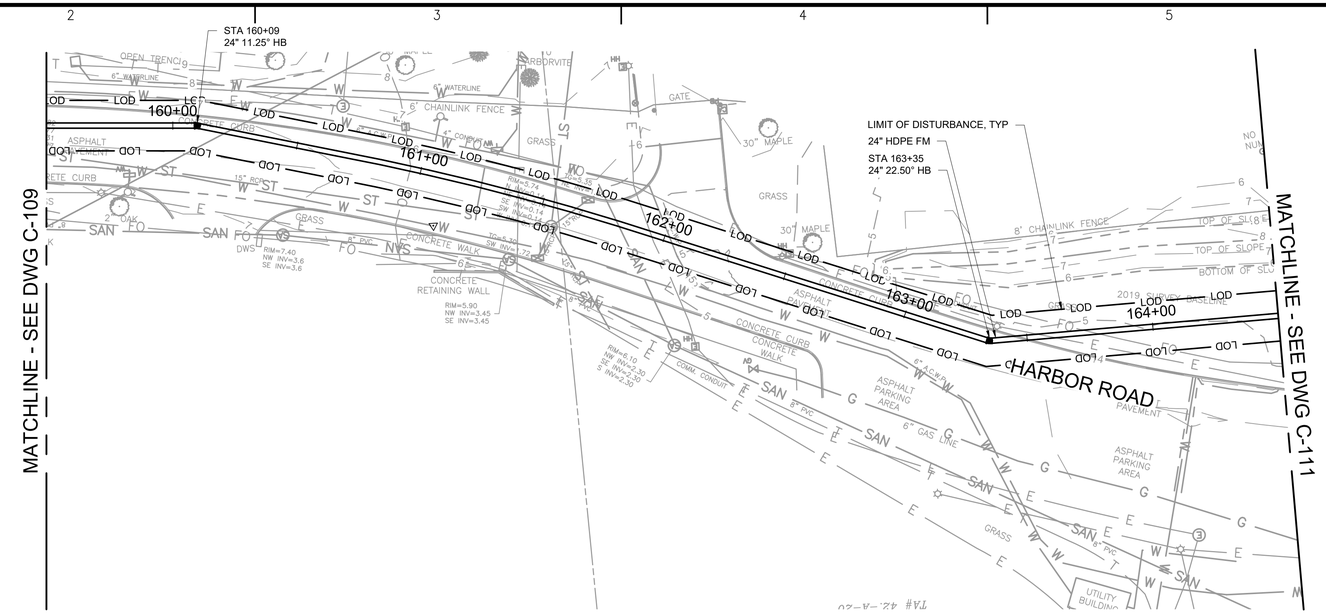

PLAN

SCALE: 1" = 30'

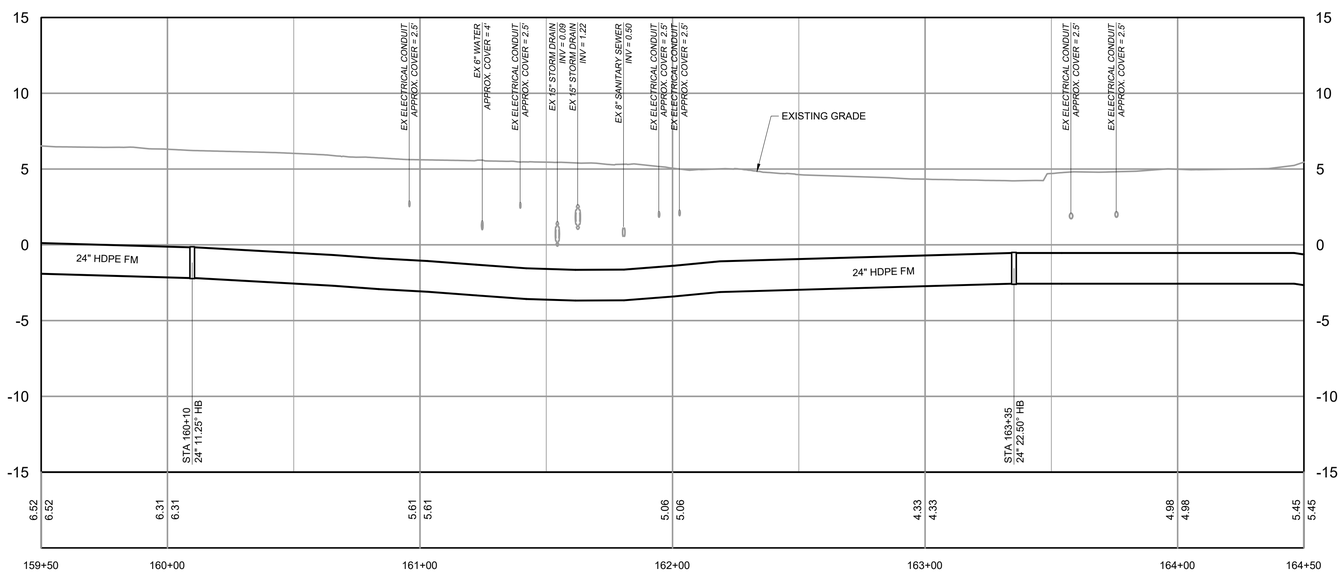

PROFILE

HORIZONTAL SCALE: 1" = 30'
VERTICAL SCALE: 1"=5'

NOTES

1. CONTRACTOR SHALL PROTECT ALL EXISTING UTILITIES DURING CONSTRUCTION.
2. ABANDONED PIPES INTERFERING WITH THE NEW FORCE MAIN SHALL BE REMOVED FROM THE GROUND AND PROPERLY DISPOSED OF. CONTRACTOR SHALL ONLY REMOVE THE SECTIONS OF PIPE INTERFERING WITH THE CONSTRUCTION OF THE NEW FORCE MAIN.

Hazen
ARCADIS
LEGAL ENTITY: MALCOLM PIRNIE, INC.
A JOINT VENTURE

SEALS

DO NOT USE FOR CONSTRUCTION

COUNTY OF NASSAU, NEW YORK
DEPARTMENT OF PUBLIC WORKS

LONG BEACH WPCP CONSOLIDATION FORCE MAIN

NO.	DATE	ISSUED FOR	BY

COPYRIGHT: 2020 HAZEN AND SAWYER/ ARCADIS A JOINT VENTURE

DATE: JUNE 2020
PROJECT NO.: H&S 90500-000
FILE NAME: C-110
DESIGNED BY: L. WALLACE
DRAWN BY: K. ROBBINS
CHECKED BY: D. SHEERAN

SHEET TITLE

CIVIL

FORCE MAIN PLAN AND PROFILE – SHEET 8

SCALE: AS SHOWN

SCALE: 1" = 5' 5 2.5 0 5'
SCALE: 1" = 30' 30 15 0 30'

SHEET 25 OF 59

WARNING
IT IS A VIOLATION OF SECTION 7209.2 OF THE NEW YORK STATE EDUCATION LAW FOR ANY PERSON, UNLESS ACTING UNDER THE DIRECTION OF A LICENSED PROFESSIONAL ENGINEER, TO ALTER IN ANY WAY PLANS, SPECIFICATIONS, PLATS OR REPORTS TO WHICH THE SEAL OF A PROFESSIONAL ENGINEER HAS BEEN APPLIED. IF AN ITEM BEARING THE SEAL OF A PROFESSIONAL ENGINEER IS ALTERED, THE ALTERING ENGINEER SHALL AFFIX TO THE ITEM HIS SEAL AND THE NOTATION "ALTERED BY" FOLLOWED BY HIS SIGNATURE, THE DATE, AND A SPECIFIC DESCRIPTION OF THE ALTERATION.

File = Q:\90500-000-NYC\Drawings\535109-015\Civil\C-110 Saved by KRobbins Save date = 6/4/2020 1:27 PM
PLOT DATE: 6/4/2020 5:44 PM BY: LWALLACE

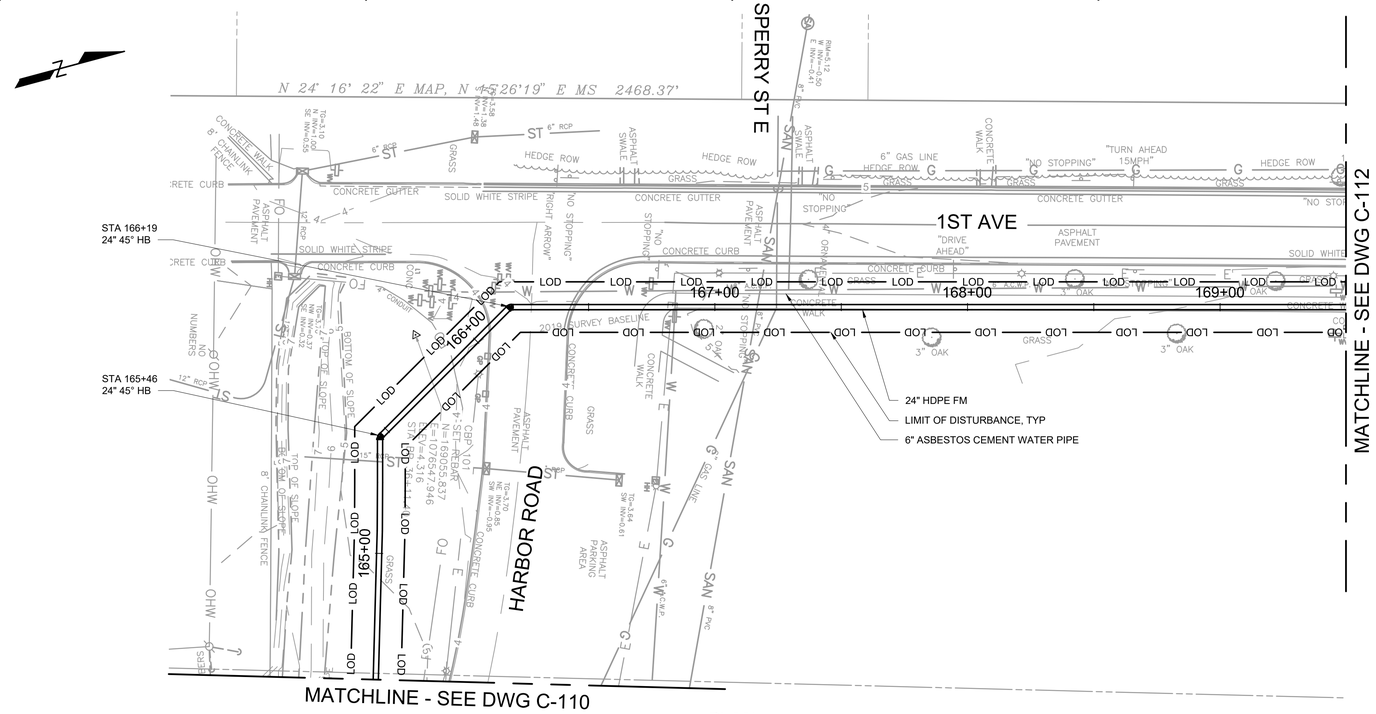

PLAN

SCALE: 1" = 30'

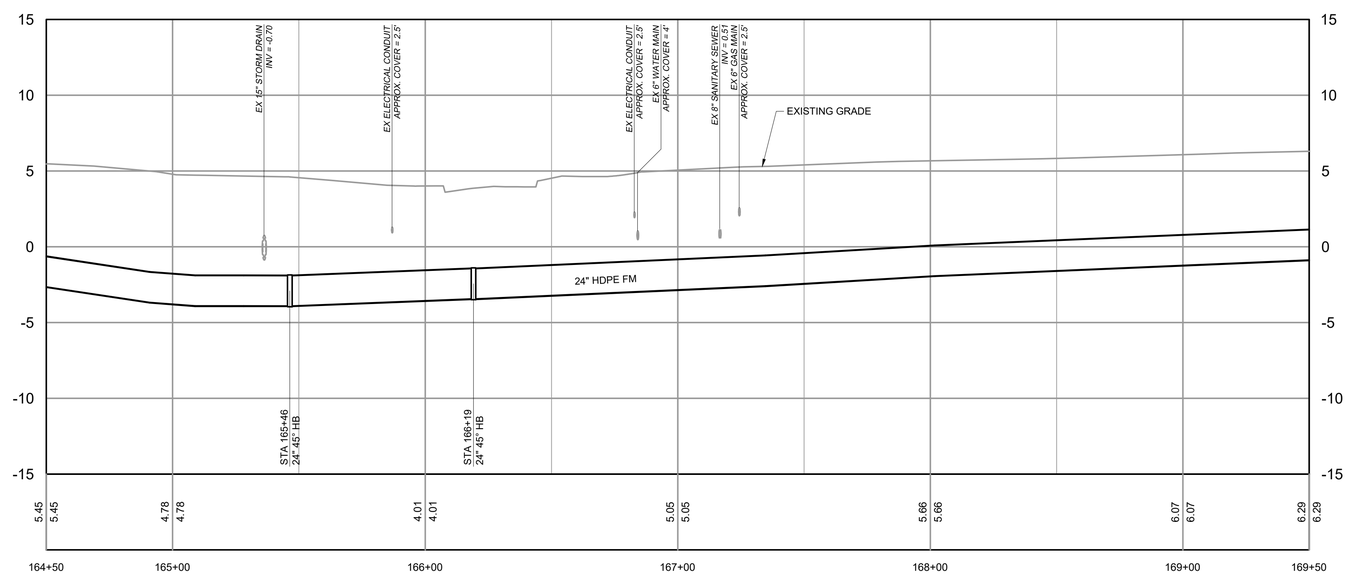

PROFILE

HORIZONTAL SCALE: 1" = 30'
VERTICAL SCALE: 1"=5'

NOTES

1. CONTRACTOR SHALL PROTECT ALL EXISTING UTILITIES DURING CONSTRUCTION.
2. ABANDONED PIPES INTERFERING WITH THE NEW FORCE MAIN SHALL BE REMOVED FROM THE GROUND AND PROPERLY DISPOSED OF. CONTRACTOR SHALL ONLY REMOVE THE SECTIONS OF PIPE INTERFERING WITH THE CONSTRUCTION OF THE NEW FORCE MAIN.

SCALE: 1" = 5' 5 2.5 0 5'

SCALE: 1" = 30' 30 15 0 30'

WARNING
IT IS A VIOLATION OF SECTION 7209.2 OF THE NEW YORK STATE EDUCATION LAW FOR ANY PERSON, UNLESS ACTING UNDER THE DIRECTION OF A LICENSED PROFESSIONAL ENGINEER, TO ALTER IN ANY WAY PLANS, SPECIFICATIONS, PLATS OR REPORTS TO WHICH THE SEAL OF A PROFESSIONAL ENGINEER HAS BEEN APPLIED. IF AN ITEM BEARING THE SEAL OF A PROFESSIONAL ENGINEER IS ALTERED, THE ALTERING ENGINEER SHALL AFFIX TO THE ITEM HIS SEAL AND THE NOTATION "ALTERED BY" FOLLOWED BY HIS SIGNATURE, THE DATE, AND A SPECIFIC DESCRIPTION OF THE ALTERATION.

File = Q:\90500-000-NYC\Drawings\535109-015\Civil\C-111 Saved by KRobbins Save date = 6/4/2020 1:30 PM
PLOT DATE: 6/4/2020 6:18 PM BY: LWALLACE

Hazen
ARCADIS
LEGAL ENTITY: MALCOLM PIRNIE, INC.
A JOINT VENTURE

SEALS

DO NOT USE FOR CONSTRUCTION

COUNTY OF NASSAU, NEW YORK
DEPARTMENT OF PUBLIC WORKS

LONG BEACH WPCP CONSOLIDATION FORCE MAIN

NO.	DATE	ISSUED FOR	BY

COPYRIGHT: 2020 HAZEN AND SAWYER/ ARCADIS A JOINT VENTURE

DATE: JUNE 2020
PROJECT NO.: H&S 90500-000
FILE NAME: C-111
DESIGNED BY: L. WALLACE
DRAWN BY: K. ROBBINS
CHECKED BY: D. SHEERAN

SHEET TITLE

CIVIL

FORCE MAIN PLAN AND PROFILE – SHEET 9

SCALE: AS SHOWN

SHEET 26 OF 59

NOTES

1. CONTRACTOR SHALL PROTECT ALL EXISTING UTILITIES DURING CONSTRUCTION.
2. ABANDONED PIPES INTERFERING WITH THE NEW FORCE MAIN SHALL BE REMOVED FROM THE GROUND AND PROPERLY DISPOSED OF. CONTRACTOR SHALL ONLY REMOVE THE SECTIONS OF PIPE INTERFERING WITH THE CONSTRUCTION OF THE NEW FORCE MAIN.

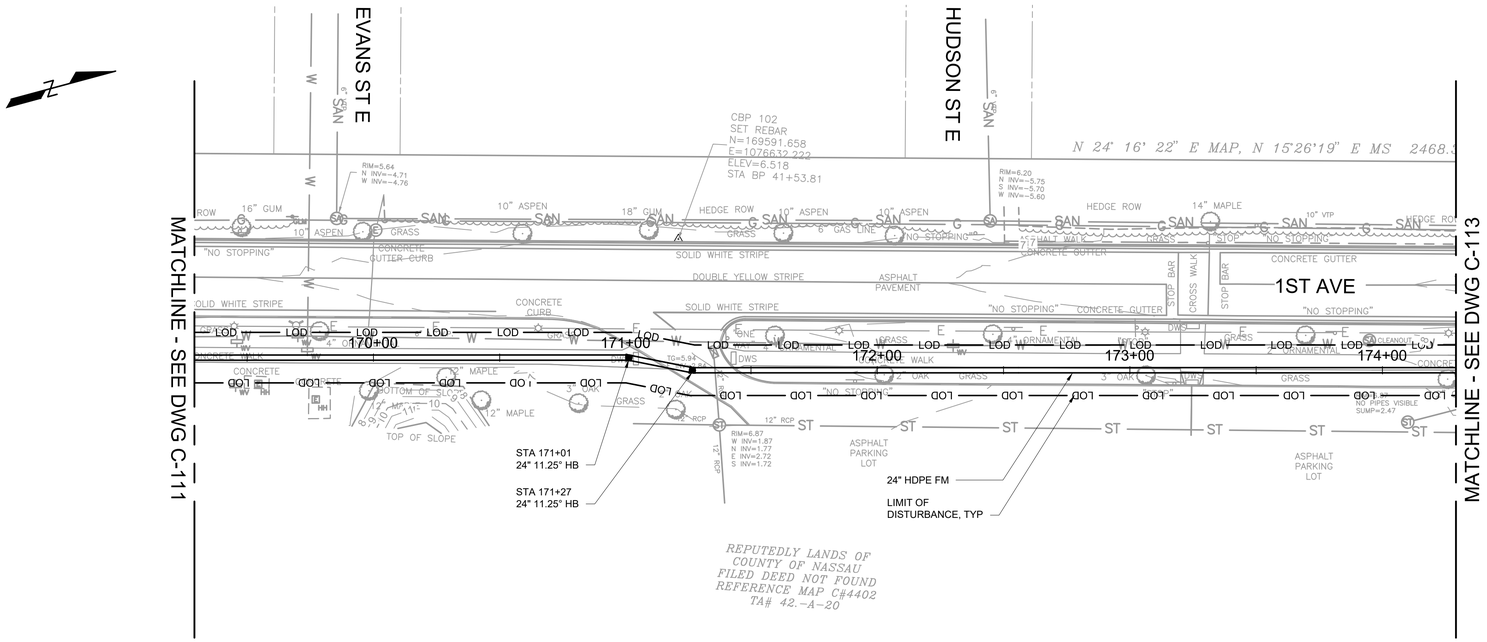

PLAN

SCALE: 1" = 30'

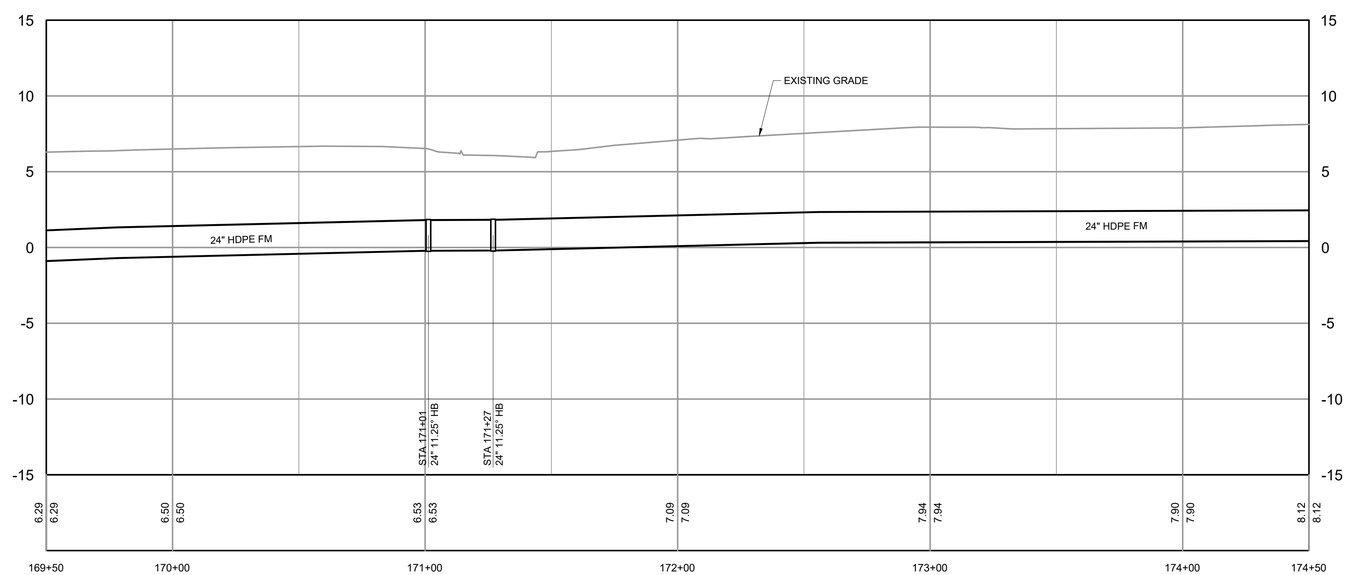

PROFILE

HORIZONTAL SCALE: 1" = 30'
VERTICAL SCALE: 1"=5'

SCALE: 1" = 5' 5 2.5 0 5'

SCALE: 1" = 30' 30 15 0 30'

WARNING
IT IS A VIOLATION OF SECTION 7209.2 OF THE NEW YORK STATE EDUCATION LAW FOR ANY PERSON, UNLESS ACTING UNDER THE DIRECTION OF A LICENSED PROFESSIONAL ENGINEER, TO ALTER IN ANY WAY PLANS, SPECIFICATIONS, PLATS OR REPORTS TO WHICH THE SEAL OF A PROFESSIONAL ENGINEER HAS BEEN APPLIED. IF AN ITEM BEARING THE SEAL OF A PROFESSIONAL ENGINEER IS ALTERED, THE ALTERING ENGINEER SHALL AFFIX TO THE ITEM HIS SEAL AND THE NOTATION "ALTERED BY" FOLLOWED BY HIS SIGNATURE, THE DATE, AND A SPECIFIC DESCRIPTION OF THE ALTERATION.

File = Q:\90500-000-NYC\Drawings\535109-015\Civil\C-112 Saved by KRobbins Save date = 6/4/2020 1:42 PM
PLOT DATE: 6/4/2020 5:47 PM BY: LWALLACE

Hazen
ARCADIS
LEGAL ENTITY: MALCOLM PIRNIE, INC.
A JOINT VENTURE

SEALS

DO NOT USE FOR CONSTRUCTION

COUNTY OF NASSAU, NEW YORK
DEPARTMENT OF PUBLIC WORKS

LONG BEACH WPCP CONSOLIDATION FORCE MAIN

NO.	DATE	ISSUED FOR	BY

COPYRIGHT: 2020 HAZEN AND SAWYER/ ARCADIS A JOINT VENTURE

DATE: JUNE 2020
PROJECT NO.: H&S 90500-000
FILE NAME: C-112
DESIGNED BY: L. WALLACE
DRAWN BY: K. ROBBINS
CHECKED BY: D. SHEERAN

SHEET TITLE

CIVIL

FORCE MAIN PLAN AND PROFILE – SHEET 10

SCALE: AS SHOWN

SHEET 27 OF 59

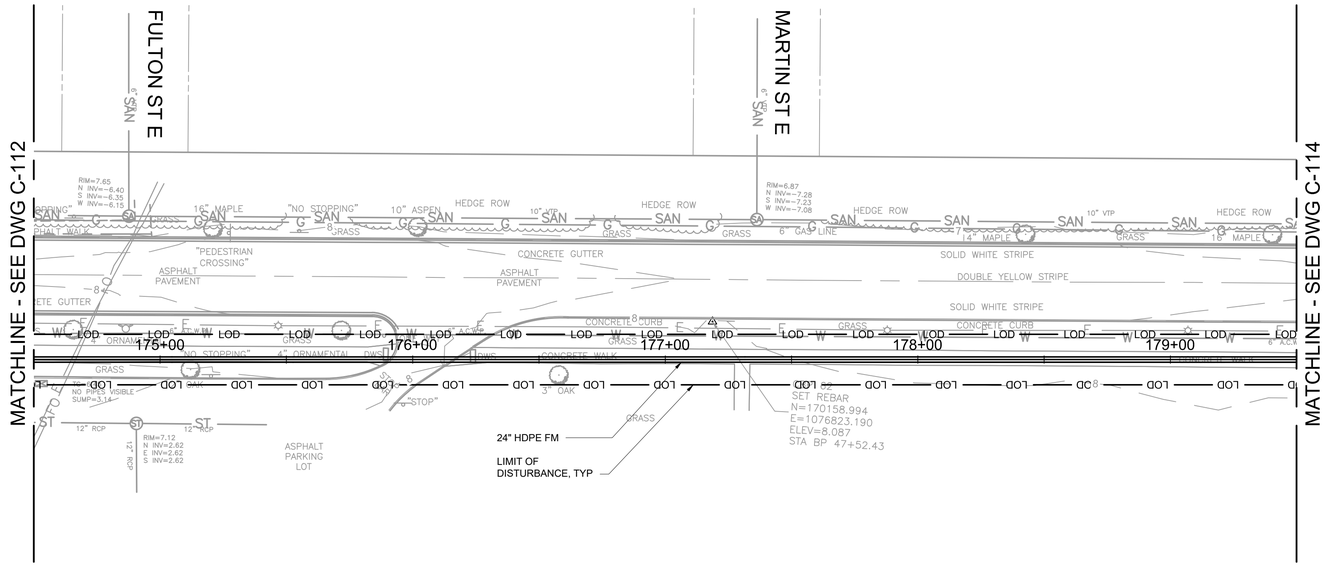

PLAN

SCALE: 1" = 30'

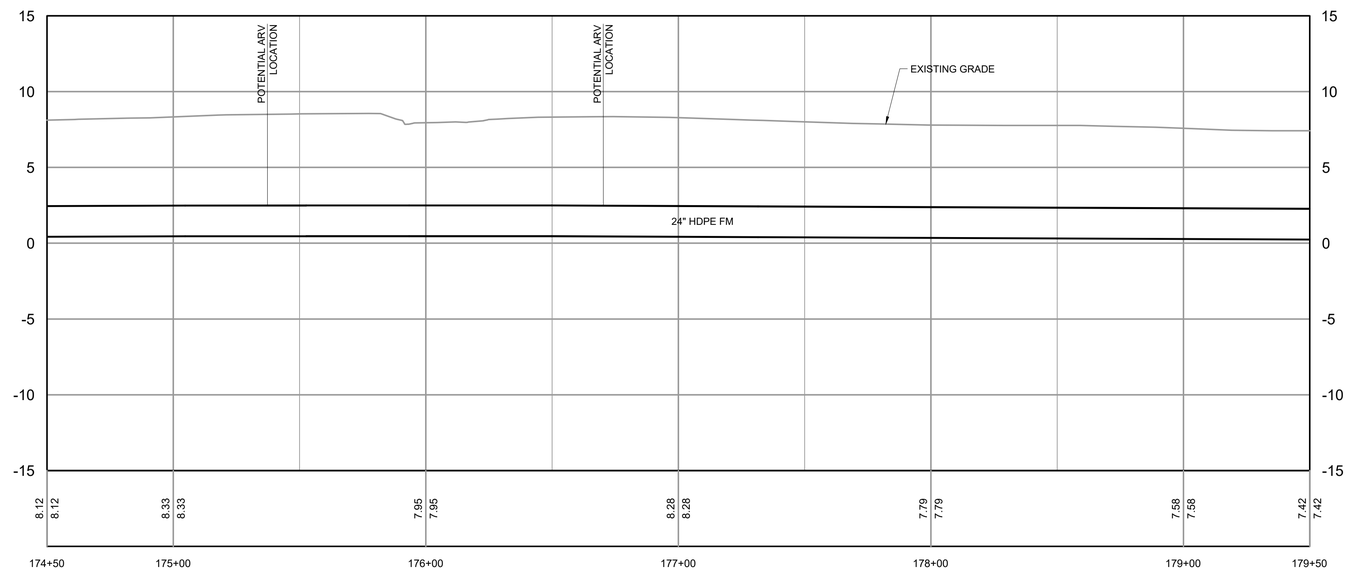

PROFILE

HORIZONTAL SCALE: 1" = 30'
VERTICAL SCALE: 1"=5'

NOTES

1. CONTRACTOR SHALL PROTECT ALL EXISTING UTILITIES DURING CONSTRUCTION.
2. ABANDONED PIPES INTERFERING WITH THE NEW FORCE MAIN SHALL BE REMOVED FROM THE GROUND AND PROPERLY DISPOSED OF. CONTRACTOR SHALL ONLY REMOVE THE SECTIONS OF PIPE INTERFERING WITH THE CONSTRUCTION OF THE NEW FORCE MAIN.

Hazen
ARCADIS
LEGAL ENTITY: MALCOLM PIRNIE, INC.
A JOINT VENTURE

SEALS

DO NOT USE FOR CONSTRUCTION

COUNTY OF NASSAU, NEW YORK
DEPARTMENT OF PUBLIC WORKS

LONG BEACH WPCP CONSOLIDATION FORCE MAIN

NO.	DATE	ISSUED FOR	BY

COPYRIGHT: 2020 HAZEN AND SAWYER/ ARCADIS A JOINT VENTURE

DATE: JUNE 2020
PROJECT NO.: H&S 90500-000
FILE NAME: C-113
DESIGNED BY: L. WALLACE
DRAWN BY: K. ROBBINS
CHECKED BY: D. SHEERAN

SHEET TITLE

CIVIL

FORCE MAIN PLAN AND PROFILE – SHEET 11

SCALE: AS SHOWN

SCALE: 1" = 5' 5 2.5 0 5'
SCALE: 1" = 30' 30 15 0 30'

SHEET 28 OF 59

WARNING
IT IS A VIOLATION OF SECTION 7209.2 OF THE NEW YORK STATE EDUCATION LAW FOR ANY PERSON, UNLESS ACTING UNDER THE DIRECTION OF A LICENSED PROFESSIONAL ENGINEER, TO ALTER IN ANY WAY PLANS, SPECIFICATIONS, PLATS OR REPORTS TO WHICH THE SEAL OF A PROFESSIONAL ENGINEER HAS BEEN APPLIED. IF AN ITEM BEARING THE SEAL OF A PROFESSIONAL ENGINEER IS ALTERED, THE ALTERING ENGINEER SHALL AFFIX TO THE ITEM HIS SEAL AND THE NOTATION "ALTERED BY" FOLLOWED BY HIS SIGNATURE, THE DATE, AND A SPECIFIC DESCRIPTION OF THE ALTERATION.

File = Q:\90500-000-NYC\Dwings\S35109-015\Civil\C-113 Saved by KRobbins Save date = 6/4/2020 1:45 PM
PLOT DATE: 6/4/2020 6:13 PM BY: LWALLACE

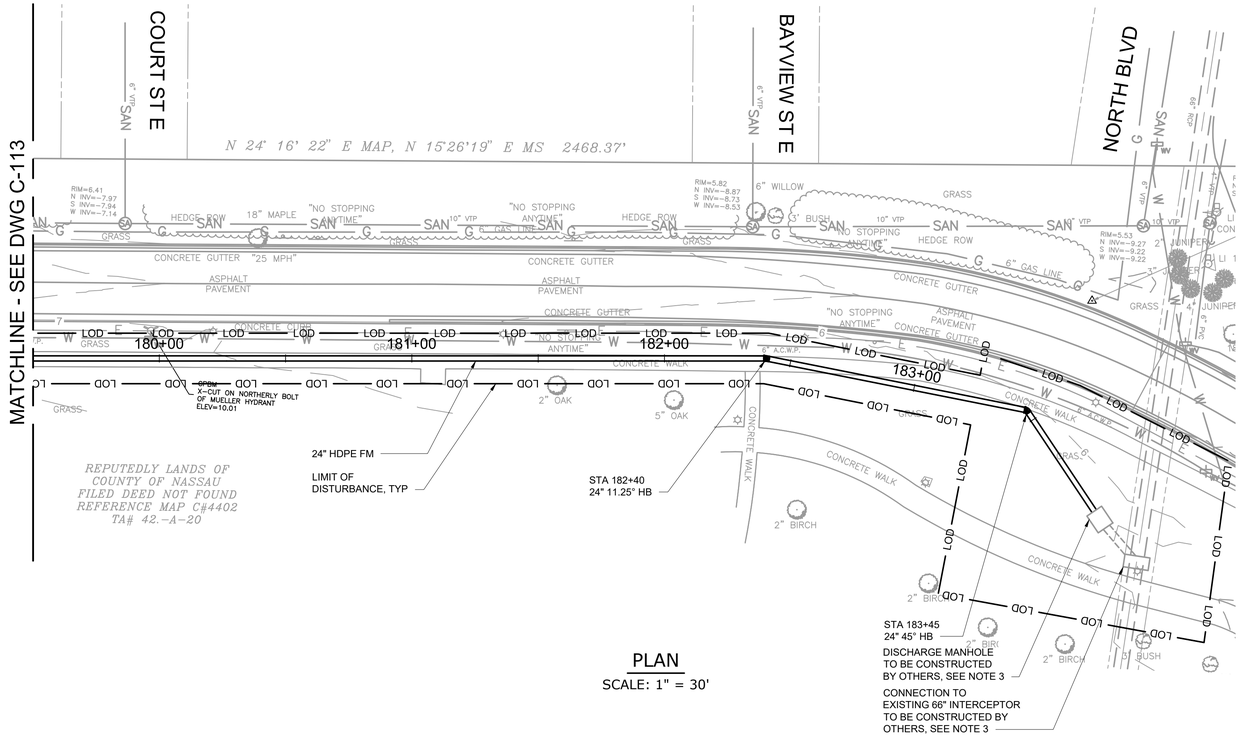

PLAN

SCALE: 1" = 30'

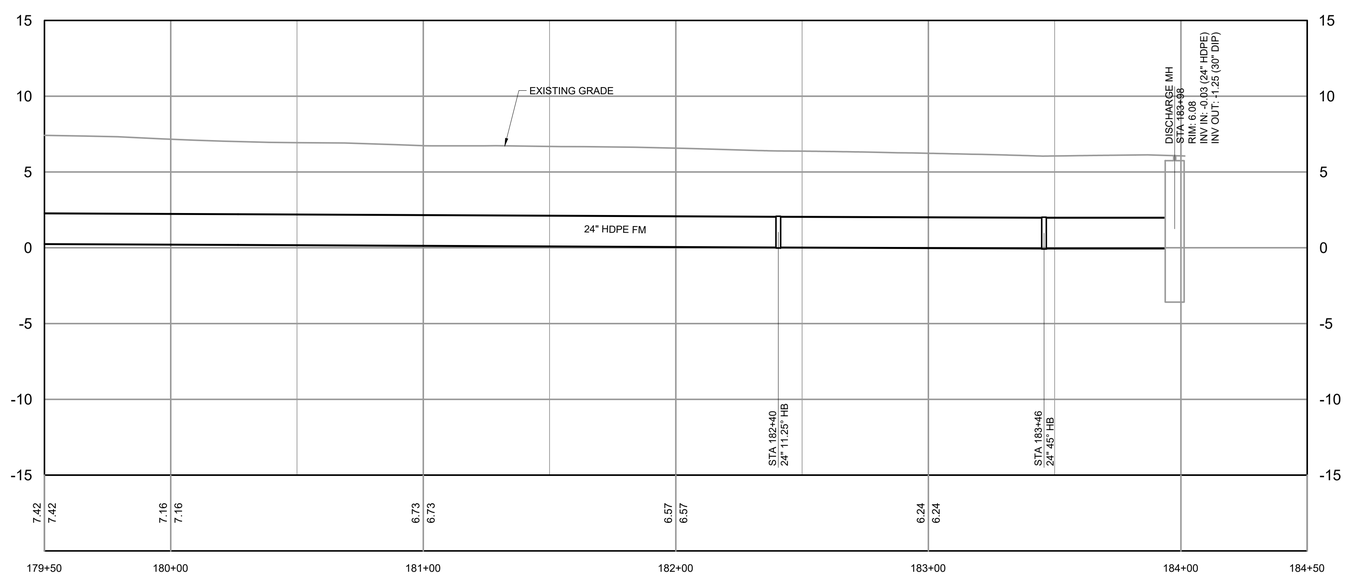

PROFILE

HORIZONTAL SCALE: 1" = 30'
VERTICAL SCALE: 1"=5'

NOTES

1. CONTRACTOR SHALL PROTECT ALL EXISTING UTILITIES DURING CONSTRUCTION.
2. ABANDONED PIPES INTERFERING WITH THE NEW FORCE MAIN SHALL BE REMOVED FROM THE GROUND AND PROPERLY DISPOSED OF. CONTRACTOR SHALL ONLY REMOVE THE SECTIONS OF PIPE INTERFERING WITH THE CONSTRUCTION OF THE NEW FORCE MAIN.
3. THE FORCE MAIN DISCHARGE MANHOLE AND INTERCEPTOR CONNECTION STRUCTURE WILL BE CONSTRUCTED UNDER CONTRACT S35109-01G.

WARNING
IT IS A VIOLATION OF SECTION 7209.2 OF THE NEW YORK STATE EDUCATION LAW FOR ANY PERSON, UNLESS ACTING UNDER THE DIRECTION OF A LICENSED PROFESSIONAL ENGINEER, TO ALTER IN ANY WAY PLANS, SPECIFICATIONS, PLATS OR REPORTS TO WHICH THE SEAL OF A PROFESSIONAL ENGINEER HAS BEEN APPLIED. IF AN ITEM BEARING THE SEAL OF A PROFESSIONAL ENGINEER IS ALTERED, THE ALTERING ENGINEER SHALL AFFIX TO THE ITEM HIS SEAL AND THE NOTATION "ALTERED BY" FOLLOWED BY HIS SIGNATURE, THE DATE, AND A SPECIFIC DESCRIPTION OF THE ALTERATION.

SCALE: 1" = 5' 5 2.5 0 5'

SCALE: 1" = 30' 30 15 0 30'

Hazen
ARCADIS
LEGAL ENTITY: MALCOLM PIRNIE, INC.
A JOINT VENTURE

SEALS

DO NOT USE FOR CONSTRUCTION

COUNTY OF NASSAU, NEW YORK
DEPARTMENT OF PUBLIC WORKS

LONG BEACH WPCP CONSOLIDATION FORCE MAIN

NO.	DATE	ISSUED FOR	BY

COPYRIGHT: 2020 HAZEN AND SAWYER/ ARCADIS A JOINT VENTURE

DATE: JUNE 2020
PROJECT NO.: H&S 90500-000
FILE NAME: C-114
DESIGNED BY: L. WALLACE
DRAWN BY: K. ROBBINS
CHECKED BY: D. SHEERAN

SHEET TITLE

CIVIL

FORCE MAIN PLAN AND PROFILE – SHEET 12

SCALE: AS SHOWN

SHEET 29 OF 59

File = Q:\90500-000-NYC\Drawings\S35109-01T\Civil\C-114 Saved by wallace Save date = 6/4/2020 3:58 PM
PLOT DATE: 6/4/2020 5:55 PM BY: WALLACE

EROSION AND SEDIMENT CONTROL NOTES:

1. CONTRACTOR SHALL BE RESPONSIBLE FOR COMPLIANCE WITH ALL SOIL EROSION AND SEDIMENT CONTROL PRACTICES.

   ALL WORK SHALL BE PERFORMED IN ACCORDANCE WITH THE APPROVED STORMWATER POLLUTION PREVENTION PLAN (SWPPP) IF APPLICABLE, AND/OR WITH THE SOIL EROSION AND SEDIMENT CONTROL REQUIREMENTS SPECIFIED BY THE NYSDEC STANDARDS AND SPECIFICATIONS FOR EROSION AND SEDIMENT CONTROL (NOVEMBER 2016).

2. IN THE EVENT OF CONFLICT BETWEEN THESE SPECIFICATION REQUIREMENTS AND POLLUTION CONTROL LAWS, RULES, REGULATIONS OR PERMIT CONDITIONS BY OTHER FEDERAL OR STATE OR LOCAL GOVERNMENT AGENCIES, THE MORE RESTRICTIVE LAWS, RULES OR REGULATIONS SHALL APPLY.

3. DUE TO THE NATURE OF THE WORK REQUIRED BY THIS CONTRACT, IT IS ANTICIPATED THE LOCATION AND NATURE OF EROSION AND SEDIMENT CONTROL MEASURES WILL BE ADJUSTED AS CONSTRUCTION PROGRESSES TO REFLECT THE CURRENT PHASE OF WORK. THE CONSTRUCTION SCHEDULE ADOPTED BY THE CONTRACTOR WILL IMPACT THE PLACEMENT AND NEED FOR SPECIFIC DEVICES REQUIRED FOR THE CONTROL OF EROSION. THE LOCATION AND EXTENT OF EROSION AND SEDIMENT CONTROL MEASURES SHALL BE REVISED AT EACH PHASE OF CONSTRUCTION RESULTING IN A CHANGE OF EITHER THE QUANTITY OR DIRECTION OF SURFACE RUNOFF FROM THE CONSTRUCTION AREAS. EROSION AND SEDIMENT CONTROL MEASURES SHALL REMAIN IN PLACE AT THE CONCLUSION OF THE PROJECT.

4. CONTRACTOR SHALL OBTAIN PRIOR APPROVAL FROM THE ENGINEER, OWNER, AND REGULATORY AGENCIES FOR DEVIATIONS FROM THE APPROVED EROSION AND SEDIMENT CONTROL PLAN.

5. NO LAND DISTURBANCE, DEMOLITION OR CONSTRUCTION ACTIVITIES SHALL BEGIN UNTIL ALL PERIMETER EROSION AND SEDIMENT CONTROL MEASURES, INCLUDING, BUT NOT LIMITED TO, SILT FENCING, INLET PROTECTION, TEMPORARY DIVERSIONS, SEDIMENT BASIN PROTECTION HAVE BEEN INSTALLED AS SHOWN ON THE CONTRACT DRAWINGS. IF CLEARING IS REQUIRED FOR INSTALLATION OF A PARTICULAR MEASURE, ALL MEASURES NOT REQUIRING CLEARING SHALL BE INSTALLED FIRST. CLEARING OF THE NECESSARY LAND FOR INSTALLATION OF THE PARTICULAR MEASURE MAY THEN PROCEED.

6. APPROPRIATE SOIL EROSION AND SEDIMENT CONTROL MEASURES TO BE USED ARE SPECIFIC TO THE PARTICULAR SITE.

7. CLEARING SHALL BE LIMITED AS MUCH AS POSSIBLE TO AREAS REQUIRED FOR CURRENT CONSTRUCTION ACTIVITIES. MASS CLEARING AND GRADING SHALL BE AVOIDED.

8. ALL EROSION CONTROL MEASURES SHALL BE INSPECTED BY THE CONTRACTORS QUALIFIED INSPECTOR WITHIN 24 HOURS FOLLOWING EVERY RAINFALL EVENT THAT HAS PRECIPITATION OF 0.5" OR GREATER, BUT IN NO CASE LESS THAN TWICE EVERY SEVEN CALENDAR DAYS. THE TWO INSPECTIONS SHALL BE SEPARATED BY A MINIMUM OF TWO (2) FULL CALENDAR DAYS.

9. EROSION AND SEDIMENT CONTROL MEASURES SHALL BE INSPECTED AND MAINTAINED, REPAIRED, OR REPLACED IMMEDIATELY BY THE CONTRACTOR AS REQUIRED TO MAINTAIN PERFORMANCE OF MEASURE DURING THE LIFE OF THE PROJECT, INCLUDING WINTER SHUTDOWN, ETC. SUCH INSPECTION AND MAINTENANCE SHALL CONTINUE UNTIL AFTER PERMANENT STABILIZATION MEASURES ARE IN PLACE AND THE TEMPORARY CONTROL MEASURES ARE ORDERED TO BE REMOVED BY THE ENGINEER.

10. TIMELY MAINTENANCE OF SEDIMENT CONTROL PRACTICES IS THE RESPONSIBILITY OF THE CONTRACTOR. ALL PRACTICES SHALL BE MAINTAINED IN GOOD WORKING ORDER AT ALL TIMES. THE SEDIMENT LEVEL IN ALL PRACTICES SHALL BE CLOSELY MONITORED AND SEDIMENT REMOVED PROMPTLY WHEN MAXIMUM LEVELS ARE REACHED OR AS ORDERED BY THE ENGINEER. ALL SEDIMENT CONTROL PRACTICES SHALL BE INSPECTED BY THE END OF EACH WORK DAY, PRIOR TO EVERY WEEKEND, BEFORE AND AFTER EACH RAINFALL OF 0.5" OR GREATER WITHIN A 12 HOUR PERIOD, OR AS DIRECTED BY THE ENGINEER IN ORDER TO INSURE PROPER OPERATION.

11. WHERE EROSION CONTROL MATERIALS HAVE BEEN USED ON FINAL GRADE THAT HAVE BEEN PERMANENTLY SEEDED, THE CONTRACTOR SHALL CARE FOR THE AREAS UNTIL ACCEPTANCE OF THE CONTRACT OR ACCEPTANCE OF THE TURF, WHICHEVER IS LATER. WHERE NECESSARY, SUCH CARE MAY INCLUDE, BUT IS NOT LIMITED TO PROVIDING WARNING SIGNS OR BARRICADES FOR PROTECTION AGAINST TRAFFIC, ANY SURFACES THAT HAVE SETTLED, BECOME GULLIED, OR OTHERWISE DAMAGED SHALL BE REPAIRED AT NO ADDITIONAL EXPENSE TO THE OWNER TO REESTABLISH THE GRADE AND SOIL CONDITIONS THAT EXISTED PRIOR TO PLACING EROSION CONTROL MATERIALS.

12. DUST CONTROL MUST BE PROVIDED AS DIRECTED IN ACCORDANCE WITH THE CONTRACT DOCUMENTS.

13. CONTRACTOR SHALL INITIATE STABILIZATION MEASURES AS SOON AS PRACTICABLE ON STOCKPILES AND IN PORTIONS OF THE SITE WHERE CONSTRUCTION ACTIVITIES HAVE TEMPORARILY OR PERMANENTLY CEASED, BUT IN NO CASE MORE THAN 7 DAYS AFTER THE CONSTRUCTION ACTIVITY IN THAT PORTION OF THE SITE HAS TEMPORARILY OR PERMANENTLY CEASED. FOR CONSTRUCTION SITES WHERE SOIL DISTURBANCE ACTIVITIES HAVE BEEN TEMPORARY OR PERMANENTLY SUSPENDED, ALL EROSION CONTROL MEASURES SHALL BE INSPECTED BY A QUALIFIED INSPECTOR AT LEAST ONCE EVERY THIRTY (30) CALENDAR DAYS. THIS REQUIREMENT DOES NOT APPLY IN THE FOLLOWING INSTANCES:

    A) WHERE THE INITIATION OF STABILIZATION MEASURES BY THE 7TH DAY AFTER CONSTRUCTION ACTIVITY TEMPORARILY OR PERMANENTLY CEASED IS PRECLUDED BY SNOW COVER OR FROZEN GROUND CONDITIONS, STABILIZATION MEASURES SHALL BE INITIATED AS SOON AS PRACTICABLE;

    B) WHERE CONSTRUCTION ACTIVITY ON A PORTION OF THE SITE IS TEMPORARILY CEASED, AND EARTH-DISTURBING ACTIVITIES WILL BE RESUMED WITHIN FOURTEEN (14) DAYS, TEMPORARY STABILIZATION MEASURES NEED NOT BE INITIATED ON THAT PORTION OF THE SITE.

14. ALL DISTURBED AREAS SHALL DRAIN TO APPROVED SEDIMENT CONTROL MEASURES AT ALL TIMES DURING LAND DISTURBANCE ACTIVITIES AND UNTIL FINAL STABILIZATION IS ACHIEVED. SEDIMENT-LADEN GROUNDWATER ENCOUNTERED DURING TRENCHING, BORING, OR OTHER ACTIVITIES SHALL BE PUMPED INTO A SEDIMENT TRAPPING DEVICE PRIOR TO BEING DISCHARGED INTO A STREAM, POND, SWALE, OR CATCH BASIN.

15. SOIL STOCKPILE AND LAYDOWN AREAS SHALL HAVE PERIMETER SEDIMENT CONTROL MEASURES AND TEMPORARY OR PERMANENT STABILIZATION MEASURES INSTALLED AS SOON AS POSSIBLE AND AT COMPLETION OF STOCKPILING AND LAYDOWN ACTIVITIES. STOCKPILES, EXCLUDING FINAL CONDITION STOCKPILE, SIDE SLOPES SHALL NOT EXCEED 3H ; 1V UNLESS APPROVED BY ENGINEER. AND IN NO CASE EXCEED 2H ; 1V. FINAL CONDITION STOCKPILE SHALL NOT EXCEED 2H ; 1V. TOP OF STOCKPILE SHALL BE GRADED WITH A MINIMUM 5% SLOPE TO INSURE PROPER DRAINAGE.

16. ALL DISTURBED AREAS, EXCEPT FOR CONCRETE AND PAVED AREAS, SHALL BE FERTILIZED, SEEDED AND MULCHED IN ACCORDANCE WITH THE SPECIFICATIONS AND THE SEEDING SCHEDULE, AND RE-SEEDED AS NECESSARY, TO ESTABLISH AND MAINTAIN A VIGOROUS, DENSE VEGETATIVE COVER.

17. ALL POINTS OF CONSTRUCTION INGRESS AND EGRESS SHALL BE PROTECTED TO PREVENT THE DEPOSITION OF MATERIALS ONTO TRAVERSED OFFSITE ROADWAYS. IF MATERIAL IS TRACKED ONTO OFFSITE ROADWAYS, IT SHALL BE REMOVED IMMEDIATELY. DO NOT UTILIZE A WATER HOSE TO CLEAN ROADS UNLESS THE RUNOFF IS DIRECTED TO A PROPERLY DESIGNED AND FUNCTIONING SEDIMENT CONTROL DEVICE. PROPER PRECAUTIONS SHALL BE TAKEN TO ENSURE THAT MATERIALS DEPOSITED ONTO OFFSITE ROADWAYS ARE REMOVED SO THAT THEY DO NOT ENTER YARD INLETS, CATCH BASINS, SEWERS, WETLANDS, SURFACE WATER BODIES, OR ROADSIDE SWALES. DO NOT UTILIZE A FIRE OR GARDEN HOSE TO CLEAN ROADS UNLESS THE RUNOFF IS DIRECTED TO A PROPERLY DESIGNED AND FUNCTIONING SEDIMENT CONTROL DEVICE. WATER PUMPED OUT OF THE EXCAVATED AREAS CONTAINS SEDIMENTS THAT MUST BE REMOVED PRIOR TO DISCHARGING TO RECEIVING BODIES OF WATER USING REMOVABLE PUMPING STATIONS, SUMP PITS, PORTABLE SEDIMENTATION TANKS AND/OR SILT CONTROL BAGS.

18. WHERE CONCRETE EQUIPMENT WASHING IS REQUIRED, THIS MUST BE DONE IN AN APPROVED "CONCRETE CONTAINMENT AREA". CONTRACTOR SHALL NOT DISCHARGE ANY CONCRETE WASHOUT WATER INTO SEWERS, SURFACE WATER BODIES OR ONTO THE GROUND. ALL WASHOUT WATER MUST BE REMOVED FROM THE SITE(S) DAILY.

20. EARTHEN-MATERIAL STOCKPILES MUST BE LOCATED A MINIMUM OF 50' FROM STORM DRAINS AND STREAMS UNLESS NO REASONABLE ALTERNATIVES ARE AVAILABLE.

19. DEDICATED AREAS FOR DEMOLITION, CONSTRUCTION, AND OTHER WASTES MUST BE LOCATED A MINIMUM OF 50' FROM STORM DRAINS AND STREAMS UNLESS NO REASONABLE ALTERNATIVES ARE AVAILABLE.

20. STAGING AREA, STOCKPILES, AND OTHER STORAGE LOCATIONS SHALL BE PROTECTED FROM EROSION.

21. SEEDING DATES: THE FOLLOWING SEEDING DATES ARE BEST RECOMMENDED TO ESTABLISH PERMANENT VEGETATIVE COVER WITHIN MOST LOCATIONS IN THE HEPSCD: SPRING - 3/15-5/15 AND FALL - 9/1 - 10/15

22. THE CONTRACTOR SHALL BE RESPONSIBLE FOR THE DESIGN, INSTALLATION, PERMITTING, AND OPERATION OF A DEWATERING SYSTEM AS REQUIRED FOR THE COMPLETION OF THE WORK. PROCEDURES FOR DEWATERING INCLUDING ASSOCIATED EROSION AND SEDIMENT CONTROL PROPOSED BY THE CONTRACTOR SHALL BE SUBMITTED TO THE ENGINEER FOR REVIEW PRIOR TO ANY EARTHWORK OPERATIONS. ALL WATER REMOVED BY DEWATERING OPERATIONS SHALL BE DISPOSED OF IN ACCORDANCE WITH THE SOIL EROSION AND SEDIMENT CONTROL REQUIREMENTS SPECIFIED BY THE NYSDEC STANDARDS AND SPECIFICATIONS FOR EROSION AND SEDIMENT CONTROL (NOVEMBER 2016). CONTRACTOR MAY USE PORTABLE SETTLING TANK, SEDIMENT FILTER BAG, OR OTHER APPROVED METHOD TO SETTLE DEWATERING FLOW OF SEDIMENT BEFORE DISCHARGE.

23. ALL EROSION AND SEDIMENT CONTROL MEASURES SHALL REMAIN IN PLACE UNTIL CONSTRUCTION IS COMPLETE, PERMANENT VEGETATION IS ESTABLISHED ON ALL DISTURBED AREAS, AND LOCAL AUTHORITIES HAVE GIVEN PERMISSION FOR REMOVAL.

24. IF INSPECTIONS BY THE ENGINEER OR THE OWNER'S INSPECTOR OR ENGINEER FIND FAILURE(S) BY THE CONTRACTOR TO COMPLY, THE ENTIRE PROJECT WILL BE STOPPED WITH NO COMPENSATION TO THE CONTRACTOR UNTIL ALL FINDINGS HAVE BEEN IDENTIFIED, ADDRESSED AND COMPLETED BY THE CONTRACTOR.

25. IF DIRECTED, THE CONTRACTOR SHALL PROVIDE TO THE ENGINEER, WEEKLY COPIES OF A REPORT FOR HIS INSPECTION, FINDINGS AND ACTIONS TAKEN.

WARNING
IT IS A VIOLATION OF SECTION 7209.2 OF THE NEW YORK STATE EDUCATION LAW FOR ANY PERSON, UNLESS ACTING UNDER THE DIRECTION OF A LICENSED PROFESSIONAL ENGINEER, TO ALTER IN ANY WAY PLANS, SPECIFICATIONS, PLATS OR REPORTS TO WHICH THE SEAL OF A PROFESSIONAL ENGINEER HAS BEEN APPLIED. IF AN ITEM BEARING THE SEAL OF A PROFESSIONAL ENGINEER IS ALTERED, THE ALTERING ENGINEER SHALL AFFIX TO THE ITEM HIS SEAL AND THE NOTATION "ALTERED BY" FOLLOWED BY HIS SIGNATURE, THE DATE, AND A SPECIFIC DESCRIPTION OF THE ALTERATION.

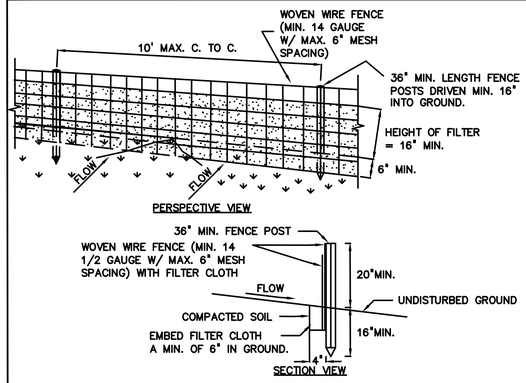

SILT FENCE

NOT TO SCALE

1. WOVEN WIRE FENCE TO BE FASTENED SECURELY TO FENCE POSTS WITH WIRE TIES OR STAPLES. POSTS SHALL BE STEEL EITHER "T" OR "U" TYPE OR HARDWOOD.
2. FILTER CLOTH TO BE TO BE FASTENED SECURELY TO WOVEN WIRE FENCE WITH TIES SPACED EVERY 24" AT TOP AND MID SECTION. FENCE SHALL BE WOVEN WIRE, 6" MAXIMUM MESH OPENING.
3. WHEN TWO SECTIONS OF FILTER CLOTH ADJOIN EACH OTHER THEY SHALL BE OVER-LAPPED BY SIX INCHES AND FOLDED.
4. PREFABRICATED UNITS SHALL BE GEOFAB, ENVIROFENCE, OR APPROVED EQUIVALENT.
5. MAINTENANCE SHALL BE PERFORMED AS NEEDED AND MATERIAL REMOVED WHEN "BULGES" DEVELOP IN THE SILT FENCE.

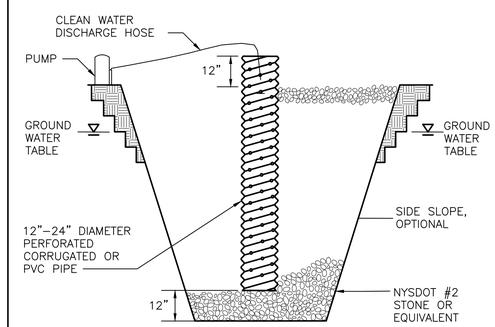

CONSTRUCTION SPECIFICATIONS

1. PIT DIMENSIONS SHOWN ARE OPTIONAL.
2. THE STANDPIPE SHOULD BE CONSTRUCTED BY PERFORATING A 12-24" DIAMETER
3. A BASE OF 2" AGGREGATE SHOULD BE PLACED IN THE PIT TO A DEPTH OF 12". AFTER INSTALLING THE STANDPIPE, THE PIT SURROUNDING THE STANDPIPE SHOULD BE BACKFILLED WITH 2" AGGREGATE. CORRUGATED OR PVC PIPE.
4. THE STANDPIPE SHOULD EXTEND 12-18" ABOVE THE LIP OF THE PIT.
5. IF DISCHARGE WILL BE PUMPED DIRECTLY TO A STORM DRAINAGE SYSTEM, THE STANDPIPE SHOULD BE WRAPPED WITH FILTERCLOTH BEFORE INSTALLATION. IF DESIRED, 1/4"-1/2" HARDWARE CLOTH MAY BE PLACED AROUND THE STANDPIPE, PRIOR TO ATTACHING THE FILTERCLOTH.

SUMP PIT DETAIL

NOT TO SCALE

Hazen
ARCADIS
LEGAL ENTITY: MALCOLM PIRNIE, INC.
A JOINT VENTURE

SEALS

DO NOT USE FOR CONSTRUCTION

COUNTY OF NASSAU, NEW YORK
DEPARTMENT OF PUBLIC WORKS

LONG BEACH WPCP CONSOLIDATION FORCE MAIN

NO.	DATE	ISSUED FOR	BY

COPYRIGHT: 2020 HAZEN AND SAWYER/ ARCADIS A JOINT VENTURE

DATE: JUNE 2020
PROJECT NO.: H&S 90500-000
FILE NAME: CD-001
DESIGNED BY: L. WALLACE
DRAWN BY: L. WALLACE
CHECKED BY: D. SHEERAN

SHEET TITLE

DETAILS

EROSION AND SEDIMENT CONTROL NOTES AND DETAILS - SHEET 1

SCALE: AS SHOWN

File = O:\90500-000-HYC\Drawings\530109-015\Cwk\CD-001 Saved by lwallace Save date = 6/4/2020 4:15 PM
PLOT DATE 6/4/2020 3:51 PM BY: LWALLACE

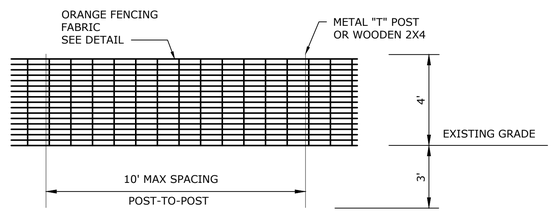

ELEVATION

1. PLACE CONTINUOUS RUN OF FENCE ON ALL SIDES OF LIMIT OF DISTURBANCE OF TOTAL CONTRACT AREA AND AS DIRECTED BY THE ENGINEER. DO NOT ATTACH FENCE MATERIAL TO TREES.
2. FENCING SHALL BE "MIRASAFE" HIGH VISIBILITY, HIGH STRENGTH POLYETHYLENE MATERAIL BY TC MIRAFI PENDERGRASS, GEORGIA, OR AN APPROVED EQUAL.
3. TIE FENCING FABRIC TO METAL "T" POSTS OR STAPLE TO VERTICAL 2X4.

TEMPORARY CONSTRUCTION FENCE

NOT TO SCALE

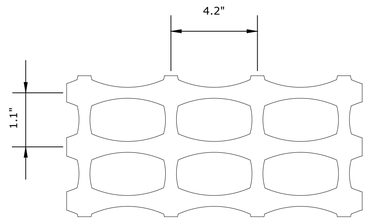

ORANGE FENCING FABRIC DETAIL

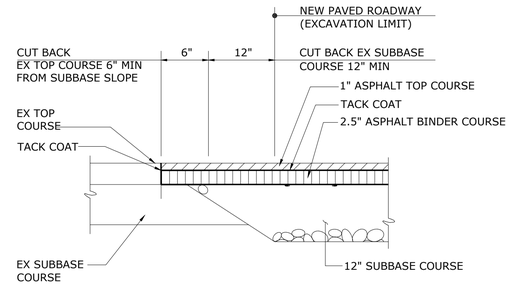

ROAD ASPHALT SECTION

NOT TO SCALE

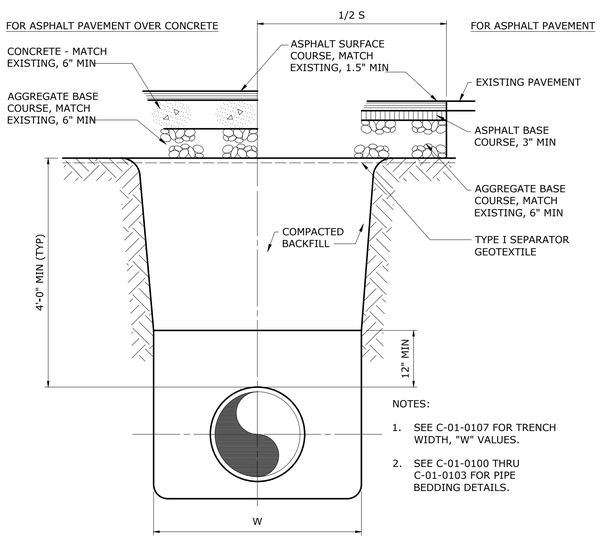

NOTES:

1. SEE C-01-0107 FOR TRENCH WIDTH, "W" VALUES.
2. SEE C-01-0100 THRU C-01-0103 FOR PIPE BEDDING DETAILS.

TYPICAL TRENCH

C-01-0106

TRENCH EXCAVATION LIMITS		
INTERNAL DIAMETER OF PIPE	W WIDTH OF TRENCH	
	MAX	W=MIN
4"-6"	3'-9"	2'-0"
8"-10"	3'-9"	2'-2"
12"	3'-9"	O.D.+2'
14"-16"	4'-2"	O.D.+2'
18"	4'-4"	O.D.+2'
20",21"	4'-8"	O.D.+2'
24"	4'-11"	O.D.+2'
27"	5'-9"	O.D.+2'
30"	6'-7"	O.D.+2'
36"	7'-4"	O.D.+2'
42"	8'-2"	O.D.+2'
48"	8'-9"	O.D.+2'
54"	9'-4"	O.D.+2'
60"	9'-10"	O.D.+2'
72"	11'-0"	O.D.+2'
78"	11'-8"	O.D.+2'
84"	12'-0"	O.D.+2'
90"	12'-6"	O.D.+2'
96"	13'-0"	O.D.+2'
108"	14'-0"	O.D.+2'
DEPTH OF CUT	S MAXIMUM PAVEMENT REPLACEMENT WIDTH	
0-6'	S=W+4'	
>6-8'	S=W+8'	
>8-10'	S=W+12'	
>10-12'	S=W+16'	
>12-14'	S=W+20'	
>14-16'	S=W+24'	
>16-18'	S=W+28'	
>18'	S=W+32'	

W = TRENCH WIDTH AT BOTTOM OF PIPE. TRENCH SIDE SLOPES SHALL BE IN ACCORDANCE WITH OSHA REQUIREMENTS.

C-01-0107

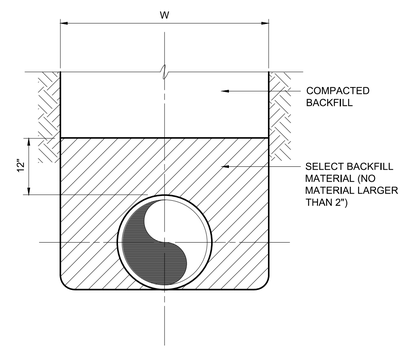

TYPE A

IN EARTH

C-01-0100

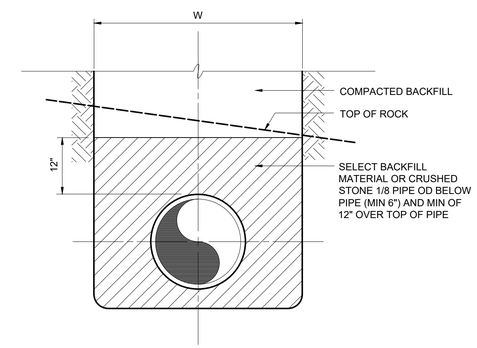

TYPE A

IN ROCK

C-01-0101

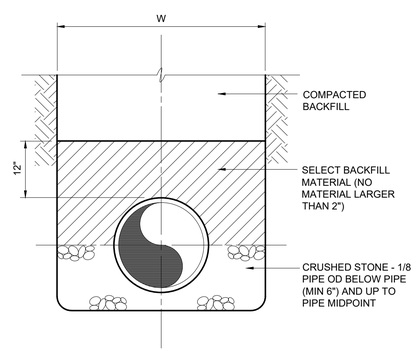

TYPE B

C-01-0102

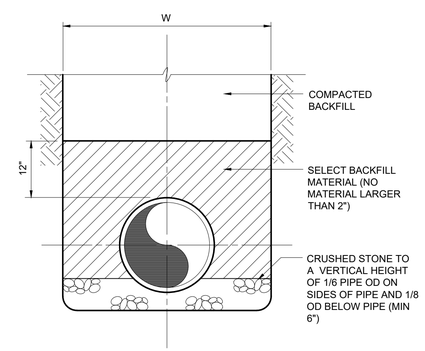

TYPE C

C-01-0103

WARNING

IT IS A VIOLATION OF SECTION 7209.2 OF THE NEW YORK STATE EDUCATION LAW FOR ANY PERSON, UNLESS ACTING UNDER THE DIRECTION OF A LICENSED PROFESSIONAL ENGINEER, TO ALTER IN ANY WAY PLANS, SPECIFICATIONS, PLATS OR REPORTS TO WHICH THE SEAL OF A PROFESSIONAL ENGINEER HAS BEEN APPLIED. IF AN ITEM BEARING THE SEAL OF A PROFESSIONAL ENGINEER IS ALTERED, THE ALTERING ENGINEER SHALL AFFIX TO THE ITEM HIS SEAL AND THE NOTATION "ALTERED BY" FOLLOWED BY HIS SIGNATURE, THE DATE, AND A SPECIFIC DESCRIPTION OF THE ALTERATION.

Hazen

ARCADIS

LEGAL ENTITY: MALCOLM PIRNIE, INC.

A JOINT VENTURE

SEALS

DO NOT USE FOR CONSTRUCTION

COUNTY OF NASSAU, NEW YORK

DEPARTMENT OF PUBLIC WORKS

LONG BEACH WPCP CONSOLIDATION FORCE MAIN

NO.	DATE	ISSUED FOR	BY

COPYRIGHT: 2020 HAZEN AND SAWYER/ ARCADIS A JOINT VENTURE

DATE: JUNE 2020

PROJECT NO.: H&S 90500-000

FILE NAME: CD-003

DESIGNED BY: L. WALLACE

DRAWN BY: L. WALLACE

CHECKED BY: D. SHEERAN

SHEET TITLE

DETAILS

CIVIL SITE DETAILS – SHEET 1

SCALE: AS SHOWN

SHEET 38 OF 59

File = Q:\90500-000-NYC\Drawings\330109-015\Civil\CD-003 Saved by lwallace Save date = 6/4/2020 10:34 AM

PLOT DATE: 6/4/2020 3:53 PM BY: LWALLACE

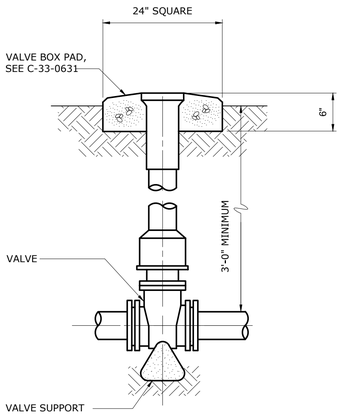

VALVE BOX
NOT TO SCALE

C-33-0630

NOTE:
EMBED INTO CONC PAD, 2-INCH AL NUMBERS AND TICK-MARK INDICATING SIZE OF VALVE AND DIRECTION OF PIPELINE

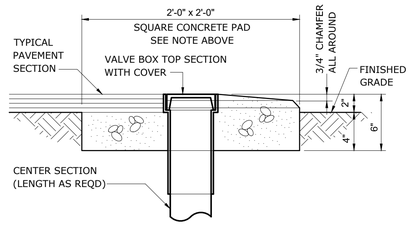

VALVE BOX PAD
NOT TO SCALE

C-33-0631

WARNING
IT IS A VIOLATION OF SECTION 7209.2 OF THE NEW YORK STATE EDUCATION LAW FOR ANY PERSON, UNLESS ACTING UNDER THE DIRECTION OF A LICENSED PROFESSIONAL ENGINEER, TO ALTER IN ANY WAY PLANS, SPECIFICATIONS, PLATS OR REPORTS TO WHICH THE SEAL OF A PROFESSIONAL ENGINEER HAS BEEN APPLIED. IF AN ITEM BEARING THE SEAL OF A PROFESSIONAL ENGINEER IS ALTERED, THE ALTERING ENGINEER SHALL AFFIX TO THE ITEM HIS SEAL AND THE NOTATION "ALTERED BY" FOLLOWED BY HIS SIGNATURE, THE DATE, AND A SPECIFIC DESCRIPTION OF THE ALTERATION.

File = Q:\90500-000-NYC\Drawings\533109-015\Cwf\CD-005 Saved by lwallace Save date = 5/14/2020 5:27 PM
PLOT DATE: 6/4/2020 5:53 PM BY: LWALLACE

Hazen
ARCADIS
LEGAL ENTITY: MALCOLM PIRNIE, INC.
A JOINT VENTURE

SEALS

DO NOT USE FOR CONSTRUCTION

COUNTY OF NASSAU, NEW YORK
DEPARTMENT OF PUBLIC WORKS

LONG BEACH WPCP CONSOLIDATION FORCE MAIN

NO.	DATE	ISSUED FOR	BY

COPYRIGHT: 2020 HAZEN AND SAWYER/ ARCADIS A JOINT VENTURE

DATE: JUNE 2020
PROJECT NO.: H&S 90500-000
FILE NAME: CD-005
DESIGNED BY: L. WALLACE
DRAWN BY: L. WALLACE
CHECKED BY: D. SHEERAN

SHEET TITLE

DETAILS

FORCE MAIN DETAILS – SHEET 1

SCALE: AS SHOWN