Appendix E
Natural Resources
(Part 4)

Appendix E-12
Essential Fish Habitat Assessment and Consultation Record

Coastal & Social Resiliency Initiatives for Tottenville Shoreline
Staten Island, New York
Essential Fish Habitat Assessment

A. INTRODUCTION

Essential Fish Habitat (EFH) is defined under the Magnuson-Stevens Fishery Conservation Management Act (16 USC §§ 1801 to 1883), as amended by the Sustainable Fisheries Act of 1996, as "those waters[1] and substrate[2] necessary to fish for spawning, breeding, feeding, or growth to maturity." Waters and substrates necessary for fish spawning, breeding, feeding, or growth to maturity – covering all stages within the life cycle of a particular species – refers to those habitats required to support a sustainable fishery and a particular species' contribution to a healthy ecosystem (50 CFR 600.10).

Section 303(a)(7) of the Magnuson-Stevens Act requires that the eight Regional Fishery Management Councils (RFMC) describe and identify EFH for each Federally managed species, and minimize adverse impacts from fishing activities on EFH. Section 305(b)(2)-(4) of the Magnuson-Stevens Act outlines the process for providing the National Marine Fisheries Service (NMFS) within the National Oceanic and Atmospheric Administration (NOAA), and the RFMC with the opportunity to comment on activities proposed by Federal agencies that have the potential to adversely impact EFH areas. Federal agencies are required to consult with NMFS (using existing consultation processes for the National Environmental Policy Act, the Endangered Species Act, or the Fish and Wildlife Coordination Act) on any action that they authorize, fund, or undertake that may adversely impact EFH.

Adverse impacts to EFH, as defined in 50 CFR 600.910(A) include any action that reduces the quality and/or quantity of EFH. Adverse impacts may include:

- Direct impacts such as physical disruption or the release of contaminants;
- Indirect impacts such as the loss of prey, reduction in the fecundity (number of offspring produced) of a managed species; and
- Site-specific or habitat-wide impacts that may include individual, cumulative, or synergetic consequences of a Federal action.

An EFH assessment of a Federal action that may adversely impact EFH must contain:

- A description of the Preferred Alternative;
- An analysis of the effects, including cumulative, on EFH, the managed species and associated species such as major prey species, and the life history stages that may be affected;
- The agency's conclusions regarding the effects of the action on EFH; and
- Proposed mitigation if applicable (50 CFR 600.920(g)).

---

[1] "Waters" include aquatic areas and their physical, chemical, and biological properties that are used by fish.

[2] "Substrate" includes sediment, hard bottom, structures, and associated biological communities that are under the water column.

The following sections describe:

- The project actions that have the potential to affect aquatic resources in the study area;
- Existing water and sediment quality and aquatic biota in Raritan Bay along the south shore of Staten Island where the Preferred Alternative is located;
- Potential impacts to aquatic biota and habitat that may result from the Proposed Actions;
- The species for which EFH has been identified near the project site and potential impacts to their habitats; and
- Potential impacts to non-EFH species which are also under the jurisdiction of the NMFS, including Atlantic sturgeon (*Acipenser oxyrinchus oxyrinchus*; endangered, federally managed) and striped bass (*Morone saxatilis*; federally managed), four species of state and federally listed marine turtles with the potential to occur in the vicinity of the Preferred Alternative as seasonal transients, and other NOAA Trust Resources (alewife [*Alosa pseudoharengus*], American eel [*Anguilla rostrata*], American shad [*Alosa sapidissima*], Atlantic croaker [*Micropogonias undulatus*], Atlantic menhaden [*Brevoortia tyrannus*], bay anchovy [*Anchoa mitchilli*], blue crab [*Callinectes sapidus*], blue mussel [*Mytilus edulis*], blueback herring [*Alosa aestivalis*], eastern oyster [*Crassostrea virginica*], horseshoe crab [*Limulus polyphemus*], northern quahog [*Mercenaria mercenaria*], soft-shell clam [*Mya arenaria*], spot [*Leiostomus xanthurus*], weakfish [*Cynoscion regalis*], and numerous forage species.

B. PROJECT DESCRIPTION

The Preferred Alternative consists of the implementation of two individual projects along the south shore of Staten Island (**Figure 1**): the Living Breakwaters Project (Breakwaters Project) and the Tottenville Shoreline Protection Project (Shoreline Project), as described below, as a strategy that would increase the overall resiliency of the Tottenville shoreline. The preferred layout of the breakwaters would attenuate wave energy and reduce shoreline erosion at the water's edge, effectively holding, or in some locations increasing, beach width, while increasing the diversity of aquatic habitats, fostering community education on coastal resiliency, increasing physical and visual access to the water's edge, enhancing community stewardship of onshore and in-water ecosystems, and increasing access to recreational opportunities. The Shoreline Project would reduce or delay flooding of inland areas during certain storm events, and reduce damage to inland structures. It is expected that during coastal storm events, in cases where over-topping from storm surge does not occur, some level of risk reduction from coastal flooding would be provided by the Shoreline Project.

BREAKWATERS PROJECT

The Breakwaters Project (**Figure 2**) comprises:

- an ecologically enhanced breakwater system, consisting of 9 breakwater segments of varying size;
- an area of one-time shoreline restoration; and
- a proposed Water Hub and possible accessory seasonal boat launch.

The proposed breakwaters would have a total length of approximately 3,200 linear feet (0.6 miles) within Raritan Bay and would be located between 790 and 1,200 feet from the shoreline.

Additionally, the vast majority of the breakwater structures would be located more than 1,700 feet from the Federal Navigation Channel, with the closest breakwater segment located more than 700 feet from the channel. The breakwater structures would occupy approximately 495,900 square feet (11.4 acres) on the bottom of Raritan Bay and result in the placement of 151,780 cubic yards (CY) of rock and ecologically enhanced concrete within Raritan Bay; approximately 117,880 CY of which would be below MHWS, and 115,990 CY of which would be below MHW. The breakwaters would incorporate ecological enhancements that include rocky protrusions (reef ridges) and the narrow spaces between them (reef streets) to create additional complex hard/rocky structured habitat extending out on the ocean-facing side of the breakwaters (**Figure 3**). The breakwaters would be positioned to optimize reductions in both wave height and shoreline erosion, minimize scour at the structures, and ensure flushing of the reef streets while enhancing habitat and minimizing habitat displacement and navigational impacts. The Type A breakwaters, farthest west in the study area, would have crest crenellations (**Attachment 1, Sheet 5**) in order to increase the surface area of intertidal habitat and create a water column connection at high tide between both sides of the breakwaters. The crenels would form areas with the same conditions found on low crested biogenic structures such as reefs, mussel beds, and tidal flats, where the crest is submerged during high tide and storm events. Effective flushing of water through these areas is typically associated with high biodiversity and biomass.

Three types of breakwaters, defined largely by their differences in crest elevation (in NAVD88) and overall height, are proposed: Type A, Type B, and Type C (**Figure 4**), all of which would extend some height above MHW. Two segments of Type A breakwaters would be installed in the western portion of the project site near Ward's Point. These breakwaters would have crenels along the tops and a crest elevation of 5 feet NAVD88, with an overall height of 11 feet. Both Type A segments would have 12 reef ridges on the ocean side. Together the two segments would be approximately 900 feet long and result in the placement of 19,940 CY of rock and other breakwater material in the bay, of which 19,020 CY would be below MHWS, and 18,840 CY would be below MHW. The two segments would occupy 2.8 acres of bay bottom (**Table 1** and **Attachment 1, Sheet 4**).

In the middle portion of the project site, offshore of the shoreline restoration area, five segments of Type B breakwaters would be installed; four Type B breakwater segments would each include 4 reef ridges and streets and one would not. Together these segments would be approximately 1,500 feet long, with a crest elevation of 14 feet NAVD88, an overall height of 20 feet, and result in the placement of approximately 79,870 CY in the bay, of which 58,620 CY would be below MHWS, and 57,520 CY would be below MHW. The five segments would occupy 5.7 acres of bay bottom (**Table 1** and **Attachment 1, Sheet 4**).

Two Type C breakwaters, C1 and C2, would be installed offshore from the terminus of Page Avenue in the eastern portion of the project site; the Type C2 breakwater segment would include 4 reef ridges and streets and a lee-side intertidal shelf, and the Type C1 segment would not. Together, these segments would be approximately 800 feet long, with a crest elevation of 14 feet NAVD88, an overall height of 24 feet. Those segments would result in the placement of approximately 51,970 CY within the bay, of which approximately 40,240 CY would be below MHWS, and 39,630 CY would be below MHW. The two segments would occupy 3.0 acres of bay bottom (**Table 1** and **Attachment 1, Sheet 4**).

Table 1
Breakwater Type Areas and Volumes

Breakwater Type	Total Length (feet)	Total Footprint (square feet)	Total Footprint (acres)	Footprint Below -6' MLW (acres)	Total Volume (cubic yards)	Total Volume Below MHW (cubic yards)	Total Volume Below MHWS (cubic yards)
A1	450	59,600	1.4	1.4	9,970	9,420	9,510
A2	450	59,600	1.4	1.4	9,970	9,420	9,510
B1	300	39,000	0.9	0.9	14,630	10,160	10,380
B2	300	51,500	1.2	1.2	16,310	11,840	12,060
B3	300	51,500	1.2	1.1	16,310	11,840	12,060
B4	300	51,500	1.2	0.8	16,310	11,840	12,060
B5	300	51,500	1.2	0.4	16,310	11,840	12,060
C1	350	49,000	1.1	0.0	20,230	14,900	15,170
C2	450	82,700	1.9	0.0	31,740	24,730	25,070
Type A Total	**900**	**119,200**	**2.8**	**2.8**	**19,940**	**18,840**	**19,020**
Type B Total	**1,500**	**245,000**	**5.7**	**4.4**	**79,870**	**57,520**	**58,620**
Type C Total	**800**	**131,700**	**3.0**	**0.0**	**51,970**	**39,630**	**40,240**
Total	***3,200***	***495,500***	***11.4***	***7.1***	***151,780***	***115,990***	***117,880***

Sources: Attachment 1, Sheet 4
Notes: Total footprint in acres is a rounded conversion of the footprint in square feet.

Breakwater crest elevations and locations were based on the relative need for storm wave attenuation along the shoreline, the intent to stabilize shoreline change across the project area and to promote shoreline accretion (reverse erosion) in key locations. Type B and C breakwaters, which each have a crest elevation of 14 feet NAVD88. Considering up to 30 inches sea level rise, these breakwaters are designed to reduce wave heights to less than 3 feet in a 100-year storm event, thereby reducing wave energy at the shoreline and structural damage to onshore assets previously exposed to storm wave action. The Type A breakwaters, with crest elevations of 5 feet, would be placed where erosion of the shoreline needs to be reduced but less wave attenuation is needed. The crenels on the tops of these breakwaters would allow water to flow through the top of the segments at MHW, reducing the flow around the structures, and thus reducing scour at their edges. The Type A breakwaters would still remain above MHW with up to 30 inches of sea level rise, and thus would still reduce or reverse long term erosion.

Wave attenuation provided by the breakwaters on a day-to-day basis would help maintain beach conditions by reducing long term beach erosion rates, reducing exposure of shoreline structures to erosion, and encouraging accretion in priority beach zones (where the existing beach is narrow and/or projected rates of erosion are high). The breakwater system is designed and located to maintain and restore the beach while minimizing down-drift impacts. The breakwaters would attenuate waves and alter the sediment transport along the shore for this purpose. Local sediment transport rates and accretion would be altered, but the natural processes would not be blocked as there would still be sediment transport along the shore and tidal circulation around the breakwaters. At the western tip of the study area near Ward's Point, the breakwaters would likely reduce sand migration from the northeast into the Federal Navigation Channel. The breakwaters were also designed to encourage shoreline growth, or accretion, in places where the beach is most narrow and/or projected erosion rates are high. One-time shoreline restoration proposed for the narrow section of shoreline between Loretto Street and Manhattan Street

(**Attachment 1, Sheet 3)** would augment the accretion potential that could be provided by the breakwaters.

To construct the breakwater segments, geotextile fabric would be installed on the bottom in a manner that minimizes sediment resuspension. The geotextile would be prefabricated offsite in large panels and spooled onto a roller that may be floated to the installation location. Sheets would be cut to the required length and lowered to the bottom using temporary framing or pinning and held in place permanently using rocks for the breakwater construction. The rock would be placed on top of the geotextile in various configurations (**Figure 5**). Rocks used for armoring and to construct the breakwaters would be made of "clean" material to further minimize the potential for release of suspended material into the water column. Crane barges would be moved during construction as needed to construct the breakwater segments, and vessels carrying construction materials would make an average of less than one trip per day over the entire construction period. Construction vessels would maintain a separation of at least 2 feet from the bottom of the Bay during all tide phases. Construction would last approximately 6 months in the first year and 5 months in the second year, or 11 months in total.

The proposed area of one-time shoreline restoration would include placement of approximately 17,404 CY of sand over approximately 136,100 square feet (3.1 acres), of which 12,341 CY would occupy 117,700 square feet (2.7 acres) below spring mean high water (MHWS), and 11,637 CY would occupy 114,500 square feet (2.6 acres) below mean high water (MHW) (**Table 2**). The proposed shoreline restoration would extend along approximately 806 feet of shoreline between Manhattan Street and Loretto Street to establish a wider beach in what is currently a narrow and erosion-prone section of the beach (**Attachment 1, Sheet 4**). Following its initial placement profile, the sand is expected to shift down the beach over time as it reaches the anticipated equilibrium configuration projected on the basis of modeling and design efforts. The shoreline restoration would extend the beach waterward at an elevation of +5.0 feet NAVD88 to a width of 50 feet and then slope downward to meet the existing bathymetry.

Table 2
Shoreline Restoration Area and Volume

	Area (square feet)	Area (acres)	Volume (cubic yards)
Total Shoreline Restoration	136,100	3.1	17,404
Below MHW	114,500	2.6	11,637
Below MHWS	117,700	2.7	12,341
Notes: Shoreline restoration would be completed over 806 linear feet of shoreline between Manhattan Street and Loretto Street.			

This 3.1-acre area was selected for one-time shoreline restoration between Manhattan and Loretto Streets to reduce erosion and grow the beach within this portion of Conference House Park. The results of modeling indicate that this section of the beach would be slow to respond to the breakwaters and may not achieve the necessary width for risk reduction and maintaining public access. Under equilibrium conditions, this one-time shoreline restoration would approximate the historic 1978 shoreline position, augment the accretion potential that can be provided by the breakwaters, and add sediment to the overall system, particularly contributing to one of the narrowest and most erosion-prone areas of beach in the site and generally enhancing overall beach growth potential. With the shoreline restoration, the Breakwaters Project would

allow the beach to gain approximately 50 feet in width over 20 years; without the added sand, beach width would only gain approximately 15 feet over this same time period.

One of three potential locations under consideration would be selected for the Water Hub within Conference House Park – Potential Location 1 would be in the vicinity of the southern terminus of Page Avenue (involving the construction of a new structure). Potential Location 2 would be in the northwestern portion of Conference House Park (involving the rehabilitation and adaptive reuse of an existing NYC Parks building). Potential Location 3 is a water-based Water Hub Option. It would comprise a floating Water Hub consisting of a vessel operated by a non-profit organization. The vessel would visit the breakwater project area for education and monitoring and would be docked at existing facilities in the City (**Figures 1 and 6 through 11**). Since the publication of the DEIS, Potential Location 3 has been selected as the appropriate Water Hub design, and Potential Locations 1 and 2 have been removed from further consideration. However, in the interest of completeness and to ensure a detailed comparative assessment of potential alternatives, this assessment conservatively retains the analyses associated with Potential Locations 1 and 2 that were presented in the DEIS.

- *Potential Location 1* **–** Potential Location 1 is in the vicinity of the southern terminus of Page Avenue. At this location, there are two options for the construction of the Water Hub. The first, Page East Option, would locate the proposed Water Hub in an existing Conference House Park parking lot and surrounding wooded area immediately east of Page Avenue. The second, Page West Option, would use a grassy site west of Page Avenue that has previously contained a two-story NYC Parks building (which was demolished in 2016 due to substantial damage caused by Superstorm Sandy). The proposed Water Hub facility is expected to include an enclosed 5,000-square-foot building and approximately 35,500 square feet of site improvements that would include landscaping, parking and utility spaces, and designated space for the use of NYC Parks vehicles and equipment. An approximately 210-foot-long by 8-foot-wide accessory seasonal boat launch would extend from about 1 foot above MHW to water depths sufficient for docking of a shallow draft research vessel in water depths between 4 and 5 feet at MLW. The proposed Water Hub would provide direct on-site waterfront access and would include parking for visitors, as well as several onshore and nearshore landscape elements. It is anticipated that the facility would be used by the New York Harbor Foundation, NYC Parks, and local schools and community groups. Should Water Hub programming be located at Potential Location 2 or Potential Location 3, a small facility would be located at Potential Location 1 to provide seating and potential storage for kayaks and beach cleaning equipment. This structure would be a small pavilion, shed, or other light structure (approximately 400 sf), and may be connected to the public water supply but without sanitary facilities. The existing parking facilities at the terminus of Page Avenue would be used to access this facility.
- *Potential Location 2* – Potential Location 2 is in the northwestern portion of Conference House Park. At this location, there are two options for the adaptive reuse of existing NYC Parks buildings for Water Hub programming: the Henry Hogg Biddle House (Biddle House); and the Rutan-Beckett House. Water access would be provided in the vicinity of the NYC Parks building selected for adaptive reuse. Water access would be provided by ADA accessible pathways and ramps leading to the beach in the vicinity of a seasonally deployed temporary floating boat launch. Parking for Water Hub activities at Potential Location 2 would be accommodated at the existing Conference House Park Visitor's Center. A small facility to provide seating, wayfinding, interpretive elements, and potential storage for kayaks and beach cleaning equipment would be constructed near the terminus of Page

Avenue. This structure would be a pavilion, shed, or other light structure as described above under Potential Location 1. The existing parking facilities at the terminus of Page Avenue would be used to access this facility.

- *Potential Location 3* – Potential Location 3 would involve a floating Water Hub, or vessel operated by a non-profit organization. The vessel is anticipated to be between 54 to 100 feet long by 24 feet wide, with a draft of 4 feet. It would be docked at existing facilities in the City and would visit the project area approximately once per week from April through November for student based teaching events, and host community events approximately twice per month. When in the project area, the vessel would anchor near the breakwater structures for observation/monitoring and education activities. Each trip would accommodate approximately 30 to 75 students/community members and instructors/presenters depending on the size of the vessel ultimately acquired. The vessel would be anchored in the vicinity of the breakwater for less than one day each time and would only operate where the bottom of the vessel can maintain a 2-foot separation from the mudline. Should Water Hub programming be located at Potential Location 3, wayfinding, interpretive elements and potential storage for kayaks would be constructed near the terminus of Page Avenue. Additional wayfinding, interpretive signage and monitoring locations would be integrated along the length of the shoreline as part of the Water Hub's educational programming. No additional parking facilities would be required with this option. Also, because this option does not include an onshore facility, a seasonally deployed temporary floating boat launch would not be included as part of the project.

TARGET SPECIES FUNCTIONAL GROUPS

The design, construction, and operation of the Breakwaters Project is intended to result in the creation of complex, three-dimensional, reef-like habitat that would increase the diversity of aquatic habitats available, including that for habitat-forming plant and invertebrate species found in Raritan Bay (e.g., brown algae and local shellfish like mussels and bivalves). These species and the resulting habitat would increase habitat heterogeneity for the fish community in Raritan Bay. Key ecological relationships including predator-prey, competition, facilitation, recruitment, and reproduction, are expected from successful reef-like habitats and would be more likely to occur on the Breakwaters Project than standard breakwaters based on its consideration of the specific ecological needs of the local estuarine biota, particularly those of ecosystem engineers like bivalves, polychaetes, and encrusting organisms. It has been shown that artificial underwater structures, like breakwaters, are rapidly colonized by epibenthic marine organisms and biofouling species (Knott et al. 2004, Evans et al. 2016, Lindquist et al. 1985). Porous structures, in particular, provide a higher complexity habitat in areas where such habitat is not present, or is the limiting factor controlling aquatic populations (Bohnsack et al. 1997, Carr and Hixon 1997, Pickering and Whitmarsh 1997). Lindquist et al. (1985) found that these structures provide foraging and sheltering habitat for reef, pelagic, and sandy shore fish species, and recommended that rubble-mound structures like breakwaters be constructed to provide maximum vertical relief and surface area in order to increase the abundance of small forage species. Small forage species would then attract pelagic sport fishes, including EFH species such as mackerel and bluefish.

During a 2015 survey, rubble mound foundations for channel markers in the study area were found to provide habitat for 43 taxa, including algae, invertebrates, and fish (SeArc 2015). These standard porous structures encourage higher biodiversity through the provision of protection and complexity of interstices. The design of the Breakwaters Project builds upon the importance of microhabitats and non-uniformity by maximizing the amount of surface area available on a

variety of hard substrate material. Design considerations for the Breakwaters Project (i.e., number, slopes, orientation, reef ridges and streets) explicitly incorporate materials and methods that would facilitate the attraction of several functional groups and species (i.e., target groups) by using a combination of materials and structures designed and engineered to recruit and retain habitat forming species of the breakwater structures.

As shown in **Table 3**, these functional groups include: habitat-forming autotrophs, bivalve habitat-forming sessile invertebrates, non-bivalve habitat-forming sessile invertebrates, cryptic fish, structure-oriented fish, transient/pelagic forage fish, upper trophic-level transient fish, benthic macroinvertebrates, and protected species, as discussed below.

Table 3
Target Species Group Descriptions

Target Species Groups	Ecological Roles and Societal Value	Representative Taxa	Existing Conditions	Essential Fish Habitat	Recreational or Commercial Value
Habitat-forming autotrophs	Primary producers; foraging/ refuge/nursery habitat; coastal protection	Red branching algae	Yes	-	-
		Red filamentous algae	Yes	-	-
		Green algae	Yes	-	-
		Brown algae	-	-	-
Bivalve habitat-forming sessile invertebrates	Refuge and substrate for primary producers, benthic and epibenthic invertebrates, and fish; filter-feeding (benthic-pelagic coupling); shoreline protection	Eastern oyster	-	-	Yes
		Blue mussel	Yes	-	Yes
		Hard clams	Yes	-	Yes
Non-bivalve habitat-forming sessile invertebrates	Forage; filtering (benthic-pelagic coupling; increased habitat rugosity)	**Barnacles**	Yes	-	-
		Bryozoans	Yes	-	-
		Tunicates	Yes	-	-
		Tubeworms	Yes	-	-
		Sponges	Yes	-	-
Cryptic fish	Forage for higher trophic-level fish, seabirds; eggs adhere to structure; use structure for refuge; wide range of prey from algae to plankton to crustaceans, mollusks, other benthic invertebrates	Gobies	Yes	-	-
		Blennies	-	-	-
		Rock gunnel	-	-	-
		Oyster toadfish	Yes	-	-
Structure oriented reef fish	Consume benthic invertebrates and fish near structured habitat; commercial and recreational fisheries	Tautog	Yes	-	-
		Black sea bass	Yes	Yes	Yes
		Cunner	Yes	-	Yes
Transient/pelagic forage fish	Forage for higher trophic-level fish, shorebirds; consume zooplankton and planktonic fish and macroinvertebrate larvae	Alewife/Blueback herring	Yes	-	Yes
		American sandlance	-	-	Yes
		American shad	-	-	Yes
		Atlantic herring	-	Yes	Yes
		Atlantic menhaden	Yes	-	Yes
		Atlantic silverside	Yes	-	-
		Atlantic tomcod	Yes	-	-
		Bay anchovy	Yes	-	-
		Inland silverside	-	-	-
		Mummichog	Yes	-	-
		Northern kingfish	Yes	-	-
		Rainbow smelt	-	-	-
		Sheepshead minnow	Yes	-	-
		Spot	Yes	-	Yes
		Sticklebacks	Yes	-	-
		Striped anchovy	-	-	-
		Striped killifish	Yes	-	-
		Tidewater silverside	-	-	-
		White mullet	Yes	-	-
Upper trophic level reef-transient fish	Predatory fish that feed on forage fish linked to or associated with (oyster) reef habitat; commercial and recreational fisheries	American eel	Yes	-	Yes
		Atlantic butterfish	Yes	Yes	Yes
		Atlantic cod	-	-	Yes
		Atlantic mackerel	-	Yes	Yes
		Atlantic striped bass	Yes	-	Yes
		Atlantic sturgeon	-	-	-
		Black drum	-	-	Yes
		Bluefish	Yes	Yes	Yes
		Crevalle Jack	Yes	-	Yes
		Hogchoker	Yes	-	-
		Monkfish	-	Yes	Yes
		Northern puffer	Yes	-	-
		Red hake	-	Yes	Yes
		Scup	Yes	Yes	Yes
		Silver hake	-	-	Yes
		Summer flounder	Yes	Yes	Yes
		Weakfish	Yes	-	Yes

Table 3
Target Species Group Descriptions

Target Species Groups	Ecological Roles and Societal Value	Representative Taxa	Existing Conditions	Essential Fish Habitat	Recreational or Commercial Value
		White perch	Yes	-	Yes
		Windowpane	Yes	Yes	Yes
		Witch flounder	-	-	Yes
		Winter flounder	Yes	Yes	Yes
		Yellowtail flounder	-	-	Yes
Benthic macroinvertebrates	Consumers of small fish and epibenthic invertebrates; horseshoe crab eggs prey for shore birds; important prey and predators of estuarine systems	Blue crab	Yes	-	Yes
		Other crabs	Yes	-	-
		Horseshoe crab	Yes	-	Yes
		Knobbed whelk	-	-	Yes
		Lobsters	-	-	Yes

Notes: Species in **bold** denote taxa that were dominant in 2015 and/or 2017 fish and hard bottom surveys. Dominant fish taxa represented 5% or more of the total fish abundance collected in a gear during either year. In both years, the most abundant species collected were Atlantic silverside (39.1% in 2015 and 44.2% in 2017) and Atlantic menhaden (15.2% in 2015 and 27.2% in 2017). Dominant macroinvertebrate taxa in the 2015 hard bottom survey were *Amphibalanus improvisus* (barnacle, 44%) and nine species of polychaete worm (between 2% and 9% of all individuals); these ten taxa represented 83% of the hard bottom community by total abundance.

Habitat Forming Autotrophs

The functional group defined as habitat-forming autotrophs includes macroalgae species found on hard substrates throughout the study area, and represents the primary producers most likely to colonize the breakwaters. Common macroalgae species in the Hudson-Raritan Estuary included brown algae (*Fucus* sp.) and green algae (*Ulva lactua*). Red branching algae (*Agardhiella* spp.), green algae, and red filamentous algae are additional macroalgae species observed within the study area. These habitat forming macroalgae provide several ecological functions in estuarine systems: primary production; nursery, foraging, and spawning habitat for fish and benthic invertebrates; water flow modulation; and nutrient cycling.

Macroalgae require suitable hard substrates to thrive, and habitat complexity contributes to the diversity of macroalgae species. Thus, the Breakwaters Project design considerations, such as incorporating settlement structures like tidal pools and habitat complexity provided by the reef streets/ridges and the rocks themselves, would encourage the recruitment and retention of this target group (Firth et al. 2014, Evans et al. 2016). The habitat provided by macroalgae could also serve as fish habitat for fish species at different life stages, including EFH species (i.e., black sea bass, red hake, summer flounder, windowpane, winter flounder, clearnose skate, little skate, winter skate, and striped bass).

Bivalve Habitat Forming Sessile Invertebrates

Bivalve habitat forming sessile invertebrates includes bivalve mollusk species like mussels and oysters, which were historically abundant in the Hudson-Raritan Estuary. This functional group provides ecosystem functions including stabilization of benthic or intertidal habitat, nursery and spawning habitat for fishes, predator refuges for forage and juvenile fish and shellfish, and modification of local currents that may enhance delivery of planktonic food particles to filter-feeding species. The presence of these habitat forming species would increase the available niche space for other species including secondary habitat formers and provide increased forage for fish and other shellfish. Growth of bivalves would be encouraged through the combination of site selection, use of bio-enhancing concrete units, and multiple sizes of primary rock substrate. Ecologically-designed reef-like structures generally attract invertebrates like bivalves, and have been shown to support ecological communities that function similarly to restored oyster reef

systems (Grabowski 2005, Luckenbach et al. 2005, Gregalis et al. 2008). The materials used to construct the breakwaters and the rugosity, height, length, width, and slope of the structures were chosen in part for their potential influence on the settlement of primary habitat forming invertebrates in addition to supporting the structural integrity of the breakwaters and their ability to attenuate waves.

Non-Bivalve Habitat Forming Sessile Invertebrates

Members of this diverse group include barnacles, bryozoans, hydroids, tunicates, encrusting sponges, sea anemones, and tube worms, all of which occur in the study area. Species in this group are primarily filter-feeders, except the predatory sea anemone. Similar to primary habitat-formers, many members of this functional group act as ecosystem engineers that transform their physical environment by accreting biogenic structures that typically outlast the lifespans of the individual organisms; these structures are generally smaller than the hard structures associated with oyster reefs or mussel beds. The fine-scale habitat complexity created by these organisms provides alternative predator refuge and foraging opportunities (Sella and Perkol-Finkel 2015). Each taxon in this group would occupy different microhabitats of the Breakwaters Project. Barnacles would colonize the intertidal zone at varying elevations, depending on the species. Bryozoans would form three dimensional aggregations over hard substrates and algae, and would add additional relief to the bio-enhancing concrete armor units, bio-enhancing concrete tide pools, and standard armor stone. Tunicates, polychaetes, and sponges would colonize the hard surfaces and add to local habitat complexity. Each would serve as prey and/or habitat for various fish species.

Cryptic Fish

The cryptic fish functional group includes small, structure-oriented benthic fish, such as gobies, blennies, rock gunnel (*Pholis gunnellus*), skilletfish (*Gobiesox strumosus*), and oyster toadfish (*Opsanus tau*). These species feed on small benthic invertebrates (e.g., tube worms, amphipods, isopods) and serve as prey for several fish species and invertebrates, including EFH species such as black sea bass and summer flounder, and other managed species such as striped bass and blue crabs. Cryptic fish would be attracted to productive reef-like structures for the protection they offer from predators and the foraging opportunities they provide. These fish have been found to utilize reef-like structures for refuge and breeding, and rarely occur more than a few feet from structured habitat. The structural features of the breakwaters were designed to attract habitat forming invertebrates and the resultant community of benthic and epibenthic invertebrates that ultimately attract cryptic fish species. Specifically, bio-enhancing concrete units attract cryptic fish like blennies and gobies, which are not typically found in standard structural armoring units (Sella and Perkol-Finkel 2015).

Structure-Oriented Fish

Natural and man-made reefs and reef-like structures provide the primary habitat for many structure-oriented fish species, such as the EFH species black sea bass, as well as tautog (*Tautoga onitis*) and cunner (*Tatogolabrus adspersus*). The use of structured habitat for refuge and feeding by each of these species varies by life stage and season. The body shape and jaw structure of these species are well-suited for navigating highly structured habitat to consume sessile benthic invertebrates or motile prey. The design of the breakwater structures (i.e., material placement, orientation, complexity) would provide suitable habitat for these species.

Transient/Pelagic Forage Fish

Transient and pelagic forage fish include anchovies, silversides, and herring, which provide forage for EFH and other managed species and are among the most abundant fish in the coastal ocean. These species are referred to as "transients" based on the fact that they do not occur near structure all the time; this does not refer to their distribution or occurrence within the study area. They are consumed by the majority of piscivorous species where they are found. Forage fish species common to Raritan Bay and neighboring waters include American shad, Atlantic menhaden, Atlantic herring, killifish, mummichog, alewife, blueback herring, silversides (Atlantic, inland, rough, and brook), and white mullet. Species in this functional group generally consume phytoplankton, zooplankton, and small benthic invertebrates. The breakwaters would provide foraging habitat for these species, as the organisms on which they feed would find habitat in and among the structures.

Upper Trophic-Level Transient Fish

Upper trophic-level transient fish are pelagic species that may forage near structured habitats on locally abundant forage fish or benthic invertebrates, including the EFH species bluefish, red hake, summer flounder, windowpane flounder, and winter flounder, other managed species such as striped bass and weakfish, along with other species including white perch and black drum. These species are referred to as "transients" based on the fact that they do not occur near structure all the time; this does not refer to their distribution or occurrence within the study area. These species constitute some of the most popular recreational and commercial fisheries in New York and along the mid-Atlantic coast. Atlantic sturgeon, a protected species, is also included in this group since adults and sub-adults may occasionally occur in the study area. The breakwaters are expected to provide additional habitat for forage fish and benthic invertebrates that would help ensure the presence of upper trophic-level transient fish. It is likely that juveniles of some of these species may also use the breakwaters as predatory refugia.

Benthic Macroinvertebrates

This functional group spans a diverse taxonomic assemblage including crustaceans (e.g., crabs, hermit crabs, lobster), mollusks (e.g., snails, whelks, limpets), and horseshoe crabs. Collectively, these species contribute to predatory-prey interactions and support diverse commercial, recreational, and biomedical (horseshoe crab) fisheries. Many of the large crustaceans in this group are opportunistic scavengers or predators, and are preyed upon by fish and other invertebrates. The complexity of the breakwaters would provide both refuge and foraging habitat for the members of this assemblage, both on the structures themselves and in the surrounding waters. Horseshoe crabs in particular, whose eggs are an important food source for migratory shorebirds, would benefit from the accretion and resulting beach habitat that would result from the breakwaters' effect on wave energy and erosion. The wide range of rock sizes and varying habitats found on the breakwater segments (i.e., waveside and leeside cores, reef streets and ridges, emergent areas, adjoining sediments) would provide substrate for habitat forming species, which would in turn serve as refuge for benthic macroinvertebrates.

Protected Species

Species in this target functional group represent social values (i.e., conservation) and include sea turtle species that may occur in the study area: Atlantic sturgeon, loggerhead sea turtle (*Caretta caretta*; threatened), green sea turtle (*Chelonia mydas*; threatened), and Kemp's ridley sea turtle (*Lepidochelys kempi*; endangered) (NMFS 2015). These species could occur in the study area as

occasional transient individuals, and do not depend on habitats in the region for breeding, wintering, or growth.

SHORELINE PROJECT

The proposed Shoreline Project would consist of a series of shoreline protection measures that would include an earthen berm, hybrid dune/revetment system, two sections of eco-revetments, and a raised edge with a revetment along with wetland enhancements, and landscaping with coastal plant species, as described in greater detail below. It would extend from approximately west of the intersection of Swinnerton Street and Billop Avenue to Page Avenue (**Figure 12**). The proposed earthen berm would be located from approximately Carteret Street to Brighton Street where an eco-revetment would extend along the northern edge of a 0.8-acre delineated tidal wetland and end at Manhattan Street and the start of a reinforced, planted dune/revetment system (hybrid dune/revetment) that would extend to Loretto Street. The proposed hybrid dune/revetment system would transition to another eco-revetment along Surf Avenue that would extend to approximately Sprague Avenue, where a stretch of raised edge with a revetment would continue the rest of the length of the Shoreline Project to Page Avenue (near the site of the proposed Water Hub at Potential Location 1). Two transition nodes, comprising approximately 358 square feet in total with landscaping, would connect the hybrid dune/revetment and eco-revetment and the eco-revetment to the raised edge; these would consist of concrete pavers connected to sidewalks or trails and stairways to allow shoreline access.

Along the length of the Shoreline Project, additional shoreline treatments would be implemented, such as wetland enhancements and additional shoreline plantings. Green infrastructure would be implemented wherever possible. The Shoreline Project has been designed to withstand storm wave action and overtopping of the shoreline structures, and to be resilient to sea level rise of 30 inches and provide some level of risk reduction from coastal flooding.

The Shoreline Project includes the following:

- *Earthen Berm* – The proposed earthen berm would be stabilized with a 12” thick layer of stone and would be approximately 25 feet wide, range from 1 foot to 7.5 feet high and extend approximately 948 linear feet between Carteret Street and Brighton Street, for a total footprint of 0.5 acres (**Figure 13**). The earthen berm would run through a section of Conference House Park consisting mainly of successional hardwood forest and connect to an eco-revetment south of Brighton Street. The crest of the berm would be 8 feet wide and contain either habitat-specific native plant species or a pathway comprised of pervious material, depending on the location. The angled sides of the berm would be planted with a mix of native habitat-specific species that will be coordinated with NYC Parks and the Greenbelt Native Plant Center. Most of the earthen berm would be vegetated.
- *Eco-Revetment between Brighton Street and Manhattan Street* – The proposed eco-revetment in this area would be 46 feet wide and extend approximately 338 linear feet between Brighton Street (at the eastern terminus of the earthen berm) to Manhattan Street (where the hybrid dune/revetment begins). This project element would bring the risk reduction system upland of the western portion of the hybrid dune/revetment system described above, along the northern edge of a 0.8-acre delineated wetland. The eco-revetment would comprise a pathway and rip rap with joint plantings, providing continuous access along this stretch of the project area (**Attachment 2**).

- *Hybrid Dune/Revetment System* – The proposed hybrid dune/revetment would be at an elevation of approximately 14 feet (approximately 1 foot higher than the existing temporary dune system), with a 70-foot to 90-foot width, and extend approximately 937 linear feet between Manhattan and Loretto Streets (**Figure 14**). The temporary dune between Brighton and Loretto Streets (approximately 16,266 CY of material) would be removed. The hybrid dune/revetment would consist of 17,374 CY of material, including armor stone, bedding stone, and earthen fill. The crest of the dune would be 10 feet wide and higher than the current grade, providing a gradual transition from upland elements to the shoreline. The proposed hybrid dune/revetment would be stabilized with armor core stone, capped with sand, and planted with American beach grass (*Ammophila breviligulata*) over an approximately 1.9-acre area.
- *Eco-Revetment between Loretto Street and Sprague Avenue* – The proposed eco-revetment in this area would be approximately 60 feet wide and extend approximately 396 feet from Loretto Street to Sprague Avenue for a total footprint of approximately 0.55 acres and comprise a bioswale, sloped plantings, a pathway, and rip rap or concrete steps, depending on the location along the shoreline (**Figure 15**). A concrete sidewalk along Surf Avenue would border a 5-foot-wide bioswale, separated by a 6 inch curb. The bioswale would be planted with a mix of native habitat-specific species. Approximately 0.09 acres of the eco-revetment would be vegetated. A narrow concrete wall would separate the bioswale and the upward-sloped section of the eco-revetment, which would be planted with perennials, ornamental grasses, and groundcover. The top of the eco-revetment would consist of an 8-foot-wide pathway that would transition to downward-sloped sections, varying in size, of American beach grass and other habitat appropriate coastal plantings, concrete steps, or rip rap, depending on the location along the shoreline.
- *Raised Edge (Revetment with Trail)* – The proposed 8-foot-wide raised edge would begin at Sprague Avenue and extend approximately 2,536 feet to Page Avenue with an approximate total footprint of 5.3 acres (**Figure 16**). The trail would be bordered upland by an approximately 5-foot-wide bioswale and shoreward by a stone revetment cresting at either 8 feet (same elevation as the proposed pathway) or 12.5 feet, depending on the location, and would comprise a top layer of either concrete or asphalt. Approximately 1.7 acres of native coastal vegetation would be planted as part of the raised edge, comprising about 17 percent of the raised edge footprint. The segment of the raised edge parallel to Tricia Way would include the removal of approximately 2,290 CY of unpermitted fill and wall within approximately 17,370 square feet located along of the shoreline. Approximately 5,470 square feet and 280 CY of unpermitted fill below MHW would be removed. Some of this fill material removed would be re-used as part of Alternative 2 in accordance with a BUD prepared for the Proposed Actions. After the unpermitted fill is removed and the components of Alternative 2 are constructed, there would be an approximately 320 CY reduction in fill below MHW.

Construction of the Shoreline Project would be conducted landside and proceed from west to east. Materials for the Shoreline Project are anticipated to be delivered to the project site via trucks to construction staging areas. Water-based delivery of material is unlikely for the Shoreline Project, but would be explored as design progresses. Site preparation would be conducted first, followed by excavation, then placement of bedding stone, armor stone, and revetment stone to construct the various Shoreline Project structures. Sand placement, final grading, and planting would be done following stone placement. An estimated 4 to 12 feet of excavation would be required for construction of the Shoreline Project. Excavated soil suitable

for reuse would be stockpiled adjacent to the excavation for use as backfill. Soil unsuitable for reuse or in excess of what is needed for construction of the proposed structure, would be transferred to construction staging areas before being hauled offsite to a licensed facility. Removal of the existing man-made temporary dune comprising sand-filled barrier bags would likely occur following the placement of the earthen berm fill so that some measure of shoreline protection would remain in place when the barrier bags are removed. Work in and around the wetland would be conducted within a demarcated, fenced area to limit construction activities and traffic within the wetland area. Construction of the Shoreline Project would take approximately 15 months – 4 months for the earthen berm, 5 months for the hybrid dune/revetment, 3 months each for the eco-revetments and transition nodes, and 6 months for the raised edge.

C. DESCRIPTION OF EXISTING AQUATIC HABITAT

WETLANDS

The open waters of Raritan Bay, including the area in which the proposed breakwaters would be located, are mapped by the National Wetland Inventory as E1UBL (estuarine, subtidal, unconsolidated bottom).[3] Towards the shore, Raritan Bay transitions from subtidal E1UBL to intertidal areas that are mapped by NWI as E2US2N (estuarine, intertidal, unconsolidated shore, sand, regularly flooded).[4] Further landward, the intertidal area is mapped as E2US2P (estuarine, intertidal, unconsolidated shore, sand, irregularly flooded), which has the same properties as E2US2N, with the exception of having less than daily exposure. These three types of NWI-mapped wetlands do not meet the characteristics of wetland soils, hydrology, or hydrophytic vegetation to be under federal jurisdiction of the USACE as wetlands, but are regulated as waters of the United States.

An approximately 2.4-acre marsh within Conference House Park that is fed by a combination of downstream freshwater input from the Twin Streams of the Lenape and upstream tidal influences from Raritan Bay is mapped by NWI as E2EM5P6 (estuarine, intertidal, emergent, *Phragmites australis*, irregularly flooded, oligohaline).[5] Within this marsh are two areas with ponded water that are mapped by NWI as a separate category, E1UBL6 (estuarine, subtidal, unconsolidated bottom, oligohaline), because these portions of the marsh are permanently flooded (i.e., subtidal). To the east of this wetland, also within Conference House Park, is a 1.5-acre NWI-mapped freshwater wetland that is classified as PUB/SS1T. This wetland was not observed during site surveys to delineate wetlands in August 2016. The proposed Shoreline Project would be located to the east and would not intersect the NWI-mapped wetland area.

---

[3] E1UBL NWI mapped wetlands are deep-water tidal habitats and adjacent tidal wetlands that are located along low-energy coastlines and have variable salinity, continuously submerged substrates consisting of 25 percent cover of particles smaller than stones (less than 6-7 cm), and less than 30 percent vegetative cover.

[4] E2US2N wetlands are areas between extreme low water and extreme high water with unconsolidated substrates of mostly sand, less than 30 percent vegetative cover, and daily exposure during receding tides.

[5] E2EM5P6 are estuarine, intertidal wetlands that are flooded less than daily, have salinities ranging from 0.5 to 5 ppm, and are dominated by common reed (*Phragmites australis*).

Figure 17 shows the NYSDEC freshwater wetlands that are mapped within the study area. The approximately 17-acre wetland (AR-22) within Conference House Park is fed by the Twin Streams of the Lenape and extends from the outlet on the Raritan Bay shoreline to the headwaters near Clermont Avenue. To the east, between Sprague Avenue and Joline Avenue, and north of where the proposed Shoreline Project would be located, is NYSDEC-mapped 104-acre freshwater wetland (AR-15) that spans Hybrid Oak Woods Park, private lots to the east, and into Butler Manor Woods and Mount Loretto Unique Area. No components of the Proposed Actions would be located within or near either wetland or their regulated buffer zones.

An unmapped tidal wetland approximately 0.8 acres in size is present within the study area located south of the terminus of Brighton Street and Surf Avenue, west of Manhattan Street, east of Chelsea Street, and north of the beach (**Figure 18**). This wetland connects to Raritan Bay through an outlet structure located landward of the temporary dune that was observed to be clogged with sand during the wetland delineation in August 2016. Spike grass (*Distichlis spicata*), black grass (*Juncus gerardii*), and common reed are the dominant plant species within the wetland. Salt marsh cordgrass (*Spartina alterniflora*) is present in the western portion of the wetland in lower elevation areas, while the eastern two thirds of the wetland is a monoculture of common reed. This wetland was delineated on August 10, 2016 and determined to meet the criteria (hydrophytic vegetation, wetland hydrology, and hydric soils) necessary to be under federal jurisdiction of the USACE.

SURFACE WATER RESOURCES

The study area is in Raritan Bay off the Tottenville shoreline along the south shore of Staten Island. Raritan Bay is part of the Lower New York Bay Complex in the New York-New Jersey Harbor, which includes Lower Bay, Raritan Bay, and Sandy Hook Bay (**Figure 1**). Raritan Bay is shallow, with water depths generally less than 18 feet, except for a small area at the eastern end of the bay and within the dredged navigation channels (Kastens et al. 1978). The Ward Point Bend and Ward Point Secondary Channels, which are maintained at authorized depths down to 37 feet and 35 feet, respectively, at mean lower low water (MLLW), extend eastward from the Arthur Kill around the Tottenville shoreline and into the eastern portion of Raritan Bay. Water depths within the portion of Raritan Bay in the study area range from 1 to 27 feet at MLLW (NOAA Nautical Chart #12331, **Figure 19**). The results of the hydrographic survey conducted within the study area for the Breakwaters Project found water depths ranging from 2 to 24 feet at MLW, with a few depressional areas where water depths are deeper in the eastern and western portions of the study area (**Figure 20**).

Raritan Bay receives direct freshwater inflow from the Raritan River, the Shrewsbury and Navesink Rivers, and various smaller tributaries along the shorelines of Staten Island and New Jersey (USFWS 1997). Waters of the Lower Bay Complex also exchange and mix with waters of the Upper Bay through the Narrows and with the Atlantic Ocean between Sandy Hook and Rockaway Point (Brinkhuis 1980). At the southern end of Staten Island, the shoreline consists mainly of mud or sand flats and sand or gravel beaches, with some scattered vegetated areas (NOAA 2001a).

Water mixes in a counterclockwise direction in the Lower Bay, dominated by semi-diurnal tidal currents (USGS 2015). During flood tide, higher salinity water from the New York Bight enters the Lower Bay and moves in a counterclockwise pattern along the Staten Island shore; during ebb tide, lower salinity water from Sandy Hook and Raritan Bays and fresh water from the Raritan River move around Sandy Hook into the New York Bight (Brinkhuis 1980). The estuary is generally well mixed, however, freshwater discharge from the Raritan River can produce

density gradients which drive eastward movement of surface waters and westward movement of bottom waters (Kastens et al. 1978). The average tidal range for the Raritan Bay-Sandy Hook Complex is about 5.5 feet (USFWS 1997), and flushing time has been estimated at 16 to 21 days (or 32 to 42 tidal cycles) (Steimle and Caracciolo-Ward 1989). Because the Lower Bay is relatively shallow, circulation patterns are susceptible to wind and to changes in runoff volumes of fresh water from the Hudson and Raritan Rivers (Brinkhuis 1980, Walford 1971).

WATER QUALITY

The Lower Bay and Raritan Bay are the most oceanic waterbodies in the New York Harbor system, and water quality conditions in the region are therefore influenced both by the connection to other waterways of the Harbor (i.e., Jamaica Bay, western Long Island Sound, East River, Upper Bay, Newark Bay) as well as the connection to the Atlantic Ocean. The area is subject to a wide variety of fluctuations in temperature, salinity, and dissolved oxygen, both from natural and anthropogenic activity (USFWS 1997).

The study area comprises intertidal, subtidal, and water column habitats at two water quality classifications under 6 NYCRR Part 885: around the southwestern corner of Staten Island approximately from Shore Road to Surf Avenue, Arthur Kill and Raritan Bay are classified as Class I waters, and from Surf Avenue east to Kenny Road, the Bay is classified as Class SB. Under 6 NYCRR 701, the best uses for Class I waters are secondary contact recreation and fishing; the best uses for Class SB waters are primary and secondary contact recreation and fishing. For both classifications, the water should be suitable for fish, shellfish, and wildlife propagation and survival. The Class SB waters of Raritan Bay are included on the 303(d) list of impaired waterbodies for metals, PCBs, aesthetics, pathogens, and nutrients (suspected) (NYSDEC 2014). Shellfishing and fish consumption uses are impaired in this portion of Raritan Bay from contaminated sediment, urban/storm runoff, CSOs, failing and/or inadequate onsite systems, illegal connections to storm sewers, boat pollution, and other sources (NYSDEC 2010). Most of the Raritan Bay region is also designated for bathing, except for the area directly surrounding the Narrows to the north (in Lower New York Bay) and the western tip of Raritan Bay near the mouths of the Arthur Kill and Raritan River (NYCDEP 2012).

Water quality data from NYCDEP Harbor Survey monitoring stations for the monitoring period 1999-2014 were analyzed to determine water quality characteristics within the study area: Station K5 is located at the confluence of the Arthur Kill with Raritan Bay, Station K5A is in Raritan Bay just south of Tottenville at the southern tip of Staten Island, and Station K6 is near the Old Orchard Lighthouse in the Lower Bay southeast of Great Kills Park (**Figure 21**). Station K5 is in Class I waters, and Stations K5A and K6 are in Class SB waters. Site-specific water quality data was also collected in the study area in June and September 2015, including temperature, dissolved oxygen, pH, salinity, secchi depth, fecal coliform, total nitrogen, nitrate/nitrite, and total Kjeldahl nitrogen. Sample sites extended from Hylan Boulevard near the mouth of the Arthur Kill to the Princes Bay lighthouse on the southern coast of Staten Island and were taken in waters ranging from about 4 to 40 feet in depth. All project-specific sampling locations corresponded with Class SB surface waters.

TEMPERATURE

Water temperatures at the three Harbor Survey stations varied temporally and by station location but were similar at the surface and bottom, indicating a fairly well-mixed system. Bottom temperatures were slightly cooler, ranging from about 33°F to 82°F with average surface temperatures around 65°F and average bottom temperatures around 63°F. Site-specific water

temperatures were consistent with the 15-year temperature ranges for the Harbor Survey sites. For all stations, minimum temperatures occurred in late winter, and the maximum occurred in late summer.

SALINITY

Salinity levels fluctuate seasonally and with the ebb and flood of the tidal cycle. While salinity was similar between the Harbor Survey stations, it increased slightly from the western station (K5) at the mouth of the Arthur Kill to the easternmost station (K6) closest to the Atlantic Ocean. As with water temperature, salinity at the bottom was slightly higher than at the surface, but was indicative of a fairly well-mixed system. Near the mouth of the Arthur Kill, salinity ranged from 7 to 22 parts per thousand (ppt) at the surface and from 9 to 24 ppt at the bottom, with averages tending towards the higher end of the range for each. Farther west in the Lower Bay, salinity ranged from about 8 to 31 ppt in surface and bottom waters.

DISSOLVED OXYGEN

Dissolved oxygen (DO) in the water column is necessary for respiration by aquatic biota; persistently low DO can degrade habitat and adversely affect aquatic biota. DO concentrations fluctuate seasonally, and is generally lower in the summer and higher in colder months (colder water can hold more oxygen than warmer water); and also due to decomposition of organic material that occurs during warmer months and consumes DO. Similar to salinity, DO generally increased from the western end to the eastern end of the study area, and was slightly lower in the bottom than in the surface waters. At the mouth of the Arthur Kill, DO ranged from 0.7 to 17.3 mg/L at the surface and from 0.6 to 16.9 mg/L at the bottom; average concentrations were 7.2 mg/L at the surface and 6.2 mg/L at the bottom. To the east in the Lower Bay, DO ranged from 4.3 to 20.5 mg/L at the surface and from 2.4 to 16.4 mg/L at the bottom, with averages of 9.8 mg/L at the surface and 8.3 mg/L at the bottom. Site-specific DO in the study area was within the general range of fluctuation for DO concentrations in the 15-year Harbor Survey monitoring period.

FECAL COLIFORM AND ENTEROCOCCUS

Fecal coliform bacteria are used as an indicator of wastewater and the possible presence of pathogenic, or disease-producing, bacteria. Average fecal coliform levels at the Harbor Survey stations ranged from 80 cfu/100mL near the Arthur Kill, to 85 cfu/100mL south of Tottenville, to 15 cfu/100mL in the Lower Bay. Site specific fecal coliform measurements were similar to those recorded at the Harbor Survey sites. NYCDEP (2013) indicates that by 2012, fecal coliform levels had not exceeded the standard at any of its monitoring sites in the Harbor since the early 1990s.

Enterococcus spp. is an indicator of fecal contamination in marine and fresh water, and high levels can be detrimental to primary contact uses, such as swimming and other recreational activities. All three Harbor Survey stations were within the USEPA Bathing Standard for the 15-year monitoring period. Enterococcus measurements ranged from 30 cfu near the Arthur Kill, to 33 cfu/100mL south of Tottenville, to 10 cfu/100mL in the Lower Bay.

SECCHI TRANSPARENCY

Secchi transparency is a measure of surface water clarity. Reduced transparency (less than 5 feet) is typically due to high suspended solids concentrations or plankton blooms, leading to light-limiting conditions and affecting primary productivity and nutrient cycling (NYCDEP 2012). Reduced transparency could also be detrimental to foraging habitat for fish. Secchi depths

in the study area generally increased from west to east, indicative of a well-mixed system near the mouths of the Raritan River and Arthur Kill. Secchi depths ranged from about 0.5 to 10 feet with an average of about 4 feet near the mouth of the Arthur Kill and south of Tottenville. In the Lower Bay, transparency was slightly higher, ranging from 1.5 to 14 feet with an average of 4.6 feet. Site-specific monitoring showed an average secchi depth measurement in the study area of about 2.7 feet in June and 4.6 feet in September.

NUTRIENTS

Excess nitrogen (including ammonia, which is a contributor to total nitrogen) and phosphorus in water can promote algae growth, leading to overgrowth of algae and primary producers, and eventually hypoxia, or reduced DO levels. Nitrogen discharges have been identified as contributing to hypoxic events in certain parts of the Harbor in the summer months; however, wastewater treatment upgrades and improved wastewater effluent quality have led to a general downward trend for total nitrogen throughout the Harbor (NYCDEP 2012). In general, nutrient levels (i.e., nitrogen, ammonia, and phosphorus) decreased from west to east, with the lowest concentrations measured in the Lower Bay. Nutrient concentrations are likely higher near inflow from rivers or tributaries, which carry runoff from surrounding areas to the Raritan Bay.

TOTAL SUSPENDED SOLIDS

Total suspended solids (TSS) includes all particles suspended in water that will not pass through a filter. TSS absorbs sunlight, which can increase water temperature and decrease DO (NYCDEP 2012). Average concentrations of TSS ranged from 13.8 mg/L at the mouth of the Arthur Kill, to 14.5 mg/L off the shore of Tottenville, to 15.5 mg/L in the Lower Bay. TSS measured at these three stations was higher than the overall levels for the entire Lower New York Bay region (NYCDEP 2012).

CHLOROPHYLL-a

Chlorophyll-*a* is used as an indicator of the health of an aquatic system's primary producers. Overgrowth of primary producers can indicate excess nutrients and eutrophication, which can lead to secondary impacts of reduced light penetration, low DO, and the formation of hypoxic zones (NYCDEP 2012). Concentrations of the plant pigment chlorophyll-*a* in water can be used to estimate productivity and the abundance of phytoplankton; levels greater than 20 µg/L are considered suggestive of eutrophic conditions (NYCDEP 2010). Chlorophyll-*a* levels are influenced by the prevalence of summer algal blooms in Raritan Bay, which receives waters from the Raritan River and Arthur Kill, both waterbodies with highly industrialized shorelines (NYCDEP 2012). In Raritan Bay, average chlorophyll-*a* levels ranged from 11.7 µg/L near the Arthur Kill, to 13.5 µg/L off the shore of Tottenville, to 16.4 µg/L in the Lower Bay. These measurements are slightly higher than the overall levels for the entire Lower New York Bay region (NYCDEP 2012).

SEDIMENT CHARACTERISTICS AND QUALITY

SEDIMENT CHARACTERISTICS

Complex flow patterns lead to widely variable sediment characteristics throughout the area. Suspended material is generally transported into the Lower Bay from the Hudson and Raritan Rivers (Brinkhuis 1980). Compared to elsewhere in the New York Harbor Complex, fine sediments from river, marine, and shoreline sources tend to accumulate at higher rates in dredged areas of the Upper bay, Newark Bay, and Raritan Bay. Overall, bottom sediment of the

Lower New York Bay, which includes Raritan Bay, comprises mostly coarse-grained sand with only 26% silt-clay material (Adams et al. 1998). Flood and Ferrini (1998) found highly reflective surface sediments along the southern shore of Staten Island in Raritan bay, which can be attributed either to the presence of methane gas bubbles in fine-grained sediments, or to the presence of coarse sediment at the surface in some areas.

The results of benthic grab surveys conducted for the Breakwaters Project in 2015 and 2017 (**Figures 22a through d**) indicate that sediments within the study area consist primarily of sand with areas of gravel in the central portion and in the vicinity of existing hard bottom features. On average throughout the study area in 2015, more than 91% of the sediments were sand or gravel (i.e., small and large grain), with the remainder defined as clay and silt (i.e., fine grain). In 2017, about 84% of samples were sand, with 10.5% gravel and the rest defined as clay and silt. Areas of coarse gravel can be found along the western edge of the study area near the navigation channel, with piles of rocks and debris near the shoreline. Smaller areas of finer silty sand and mud exist along the seaward edge of the study area near the navigation channel. Areas of fine-grained silty sediment occur off the southwest corner of Conference House Park and along the eastern portion of the study area.

SEDIMENT QUALITY

Typical of any urban watershed, New York Harbor sediments are contaminated due to a history of industrial uses in the area. The Lower New York Harbor receives contaminated sediments from industrial areas upstream, both in the Hudson River and along the north and west shores of Staten Island. Trends in contamination tend to follow trends in sediment characteristics, especially grain size and organic carbon content. In general, the percentage of fine sediment is somewhat proportional to sediment contamination concentrations (USACE 1999). NOAA (1995) reported the presence of trace elements, polycyclic aromatic hydrocarbons (PAHs), chlorinated pesticides, and other hydrocarbons; sediment toxicity was lower in portions of Lower New York Harbor and northern Raritan Bay compared to the rest of the Harbor, and diminished southward and eastward toward the mouth of the estuary, especially in samples that were relatively high in sand content. In western Raritan Bay, average and/or maximum concentrations of cadmium, chromium, copper, nickel, lead, and zinc were relatively high (NOAA 1995). Sediment contamination in Raritan Bay appears to be influenced by outflows from the Arthur Kill and Raritan River, as toxicity levels are generally highest in the western portion of the Bay (USACE 2004).

Site-specific sediment samples (see **Figures 22 a through d**) generally indicated low levels of contamination (i.e., Class A under the Technical and Operational Guidance Series [TOGS] 5.1.9) in the study area. No high levels of concentration (i.e., Class C under TOGS) were collected. Moderate levels of contamination (i.e., Class B under TOGS) were collected for arsenic, copper, lead, mercury, DDT+DDE+DDT, and the sum of PAHs. These were concentrated at the southwest tip of Staten Island, off the southwestern portion of Conference House Park. Additionally, one sample location within Raritan Bay, south of Conference House Park, contained Class B concentrations of biphenyl, and two sample locations close to the shoreline and east of Page Avenue contained Class B concentrations of mercury.

AQUATIC BIOTA

PHYTOPLANKTON, MACROALGAE, AND ASSOCIATED EPIBENTHIC FAUNA ON HARD BOTTOM AREAS

Diatoms, dinoflagellates, green algae, and blue-green algae are the most dominant groups of phytoplankton in the New York-New Jersey Harbor area (Hazen and Sawyer 1983, Brosnan and O'Shea 1995). From 1991-2000, surveys along the shorelines of Staten Island documented 94 phytoplankton taxa; the most frequently collected were *Nannochloris atomus*, *Skeletonema costatum*, *Rhizosolenia delicatula*, and dinoflagellates (*Peridinium* spp.) (NYCDEP 2007). Six species of phytoplankton that are associated with shellfish disease are widespread in the New York-New Jersey Harbor area, including *Pseudonitzschia pungens*, *Pseudonitzschia seriata*, *Dinophysis acuta*, *Dinophysis caudate*, *Prorocentrum micans*, and *Prorocentrum minimum*. However, these species typically only affect shellfish when they occur at very high concentrations or the shellfish are stressed from highly degraded habitat conditions, and no shellfish poisoning in the harbor is known to occur (NYCDEP 2007).

Benthic macroalgae are found in shallow waters of Raritan Bay. Common species in the New York-New Jersey Harbor area include brown algae (*Fucus* sp.) and sea lettuce (*Ulva lactuca*) (Perlmutter 1971). These species have a particular affinity for hard substrates within the photic zone, and are frequent colonists of pilings, rocks, bulkheads and other structures. Rubble mound channel marker foundations in the study area were found to provide habitat for 8 species of macroalgae (SeArc 2015).

Hard-bottom macroalgae composition in the study area was characterized in hard bottom surveys conducted in July and September of 2015 (**Figures 23a and b**). A total of 19 macroalgal taxa were identified from the 13 destructive samples collected in July; total biomass ranged from 0.02 to 2.69 grams and averaged 1.10 grams. A total of 16 macroalgal taxa were identified in the 15 destructive samples taken in September; total biomass ranged from 0 to 8.75 grams and averaged 1.80 grams. A total of 32 macroalgal and epibenthic faunal taxa were identified in the 23 composite images taken in July. The dominant species near the mouth of the Arthur Kill at the southwestern point of Staten Island were *Agardhiella* spp., a red branching algae, and *Ulva lactuca*, a sea lettuce. *Ulva* spp. and red filamentous algae were most abundant at sites farther east along the southern edge of Staten Island. The July 2015 photograph analysis yielded four species of gastropods (*Littorina littorea*, *Urosalpinx cinerea*, *Ilyanassa obsoleta*, and *Eupleura caudata*), two species of sponges (*Microciona prolifera* and *Halichondria bowerbanki*), a species of anemone (*Diadumene leucolena*), and tunicate (*Molgula manhattensis*). In September 2015, 26 macroalgal taxa were identified in the 26 composite images. The red branching algae *Agardhiella* spp., *Ulva* spp., and red filamentous algae were the dominant taxa observed at two of the sites. The eastern-most site was dominated by bryozoans, encrusting sponges, and hydroids. The September 2015 photograph analysis also yielded three gastropods (*Urosalpinx cinerea*, *Eupleura caudata*, and *Crepidula* spp.), a species of bivalve (the hard clam *Mercenaria mercenaria*), an anemone (*Metridium senile*), and tube worms (*Serpulidea*).

ZOOPLANKTON

Zooplankton are an important component of the food web of the New York-New Jersey Harbor area. These organisms feed on phytoplankton and decomposed material, and are a primary food source for bait fish such as bay anchovy (*Anchoa mitchilli*) and the early life stages of commercially and recreationally important fish such as striped bass (*Morone saxatilis*) and white perch (*Morone americana*). Copepods, rotifers, barnacle larva, mysid shrimp, and amphipods are among the most

common groups of zooplankton in New York-New Jersey Harbor (Perlmutter 1971, Stepien et al. 1981, Hazen and Sawyer 1983, Lonsdale and Cosper 1994). Sampling from 1991-2000 by NYCDEP found 20 zooplankton taxa offshore from Staten Island, with the most dominant taxa being *Tintinnopsis* spp., nauplius stage copepods (*Copepoda* spp.), and *Eutreptia* spp. (NYCDEP 2007).

BENTHIC MACROINVERTEBRATES

Benthic invertebrate sampling was conducted within the study area during June and September of 2015 and 2017 to characterize the benthic invertebrate community in Raritan Bay in the vicinity of the Breakwaters Project (**Figures 22a through d**). In 2015, a total of 184 benthic invertebrate taxa were collected from 120 random grab samples. The polychaete worm *Mediomastus ambiset*, the amphipod *Unciola serrata*, oligochaete worms, polychaete worms *Polydora cornuta* and *Streblospio benedicti*, and the amphipod *Grandidierella japonica* comprised the largest percent of the benthic community sampled. Forty-eight unique taxa were collected during the June sampling event, 18 of which were collected at abundances of 10 or more individuals. Twenty-seven unique taxa were collected during the September sampling event, 8 of which were collected at abundances of 10 or more individuals. SeArc (2015) also found 22 species of benthic macroinvertebrates in a survey of rubble mound channel marker foundations in the study area. Benthic macroinvertebrates were the most abundant of all 21 taxa found in the deep habitat sampling area. In 2017, a total of 193 benthic invertebrate taxa were collected from 120 grab samples, with 72 taxa representing 99% of all individuals sample. The polychaete worms *Streblospio benedicti* and *Mediomastus ambiseta*, oligochaete worms, the amphipod *Ampelisca abdita*, and the polychaete worm *Sabellaria vulgaris* comprised the largest percent of the benthic community sampled. Thirty-eight unique taxa were collected during the June sampling event, seven of which were collected at abundances of 10 or more individuals. Thirty-five unique taxa were collected during the September sampling event, seven of which were collected at abundances of 10 or more individuals.

As part of the benthic macroinvertebrate sampling, hard clam (*Mercenaria mercenaria*) were collected in September 2015. A total of 231 clams were collected via diver, clam rake, and van Veen grab. An additional 63 hard clams were found in the 60 macroinvertebrate grab samples collected during the September 2015 survey. Overall, clams ranged in size from 44 to 95 mm with an average length of 73 mm.

During 2015, the greatest difference in benthic community structure was observed between gravel and mud substrates ($R = 0.74$, $p = 0.001$), but significant differences were also apparent between sand and mud ($R = 0.36$, $p = 0.001$) and between sand and gravel ($R = 0.24$, $p = 0.001$). During 2017, benthic assemblages were again significantly different between sand and mud ($R = 0.33$, $p = 0.001$); the sample size for gravel substrates was too small for analysis ($n = 4$).

In general, gravel substrates had higher abundances of most benthic invertebrate taxa than sand and mud substrates. Sand and gravel substrates had similar species composition but benthic taxa were found at similar or lower abundance in sand compared to gravel substrate. Mud substrates had higher abundances of just a few dominant taxa compared to sand substrates; most taxa were more abundant in sand relative to mud. In summary, the benthic invertebrate community in Raritan Bay in the vicinity of the project consisted of 241 taxa characterized by a diverse range of polychaete and oligochaete worms, amphipods, and gastropod and bivalve mollusks. Over the course of the two-year sampling effort, three dominant benthic taxa represented the majority (59%) of all individuals collected: two polychaete worms (*Mediomastus ambiseta* and *Streblospio benedicti*) and oligochaete worms were the most abundant species collected during each sampling event. The species composition and abundance of the benthic community varied

most between seasons and years and less among mud, sand, and gravel substrates. Hard bottom surveys were conducted in July and September of 2015 to characterize benthic communities at five rock pile locations within the project area. The surveys included sampling of algal biomass and invertebrate population density, and evaluation of photographs and underwater video where feasible. In general, gastropods, amphipods and polychaete worms represented the majority of the hard-bottom assemblage at all five hard-bottom sites, though the species composition varied among sites.

Horseshoe Crabs

Horseshoe crab egg surveys were conducted along the beach in the study area approximately between Swinnerton Street and Page Avenue in June 2015 and June 2017 (**Figure 24**). During the June 2015 survey, horseshoe crab eggs were found in only 3 of the 24 cores taken. The numbers of eggs in these 3 cores were highly variable at 5, 7, and 105. This extrapolates to densities of 3,125, 4,375, and 65,625 eggs/m^2, respectively. Among all 24 cores, including the 21 cores with no eggs, egg density within the survey area averaged 3047 eggs/m^2 (± 13,372 SD). Three adult horseshoe crabs were observed on the beach on the day of the June survey, presumably about to lay eggs near the high tide line on the segment of beach near Swinnerton Street, near Brighton Street in between the interim dune and the current water line, and near the intersection of the Surf Avenue trail with the beach. Six dead horseshoe crabs were also observed throughout the survey area.

In June 2017, horseshoe crab eggs were found in only 4 of the 60 cores taken. The numbers of eggs in these cores were highly variable: 1, 2, 5, and 524. This extrapolates to densities of 32, 64, 159, and 16,688 eggs/m^2. Among all 60 cores, including the 56 cores that did not contain eggs, egg density within the survey area averaged 282 eggs/m^2 (± 2,154 SD). The sample with the highest number of eggs was located at the westernmost sampling point at the high tide line. All but one sample containing eggs were located approximately between Carteret Street and Brighton Street; the other was located at Joline Avenue. Beach substrate within this section of beach was primarily sandy, compared to the rockier beach substrate to the east. The beach is also wider with a gentle slope compared to areas west of Manhattan Street, where the beach is narrower with rocky substrate. No eggs were collected between Manhattan and Loretto Streets, where the one-time shoreline restoration would take place. During a visual survey at high tide on June 8, 2017, several horseshoe crab spawning pairs along with scattered males and females were seen between Swinnerton Street and Brighton Street, all at or near the high tide line; none were seen farther east during the survey. Significantly more spawning pairs were observed during a visual survey at high tide on June 7, 2017 within Conference House Park from Hylan Boulevard to Ward's Point, at the confluence of the Arthur Kill with Raritan Bay on the west-facing shore, and west of the egg sampling locations.

For comparison, horseshoe crab egg sampling on several beaches in Jamaica Bay using the same methodology found many beaches to have densities of over 4,000 eggs/m^2, and in some cases, over 100,000 eggs/m^2. However, egg density was extremely spatially variable, ranging from no eggs on several beaches to a high of 287,748 eggs/m^2 on one beach (Botton et al. 2006). Horseshoe crab egg sampling on Long Island has also found egg density to be extremely variable both within and among beaches (Sclafani et al. 2009).

FISHES

The fish community of the Raritan Bay and neighboring waters includes prey species (e.g., bay anchovy, Atlantic menhaden, Atlantic silverside) that provide forage for higher-level predators

in the ecosystem, species that support recreational and commercial fisheries (e.g., summer flounder, striped bass, winter flounder, bluefish), and those species protected under the Endangered Species Act such as Atlantic sturgeon (Berg and Levinton 1985; MacKenzie 1990; USACE 2004a, ASSRT 2007; SSSRT 2010). Several scientific surveys have documented the spatial and temporal distribution of catches of Raritan Bay fish species (e.g., Berg and Levinton 1985; Steimle et al. 2000; USACE 2004a). In addition, fish surveys were conducted within the study area in June, July and September of 2015, and during the same months in 2017. **Table 4** lists freshwater, coastal, anadromous, and catadromous fish species caught in Raritan Bay and neighboring waters on the basis of these previous surveys and the more recent surveys conducted for the Breakwaters Project in 2015 and 2017, including a visual survey of the rubble mound channel marker foundations.

Habitats play a central role in defining ecological relationships between species. The collection of prey species varies among different habitat types, thus, the presence of predators depends, in part, on the available habitat for forage species (e.g., fish and invertebrates). This habitat-based link between predators and prey (i.e., trophic linkages) helps determine the collection of fish species in particular habitats of Raritan Bay and neighboring waters. Benthic invertebrates that reside in the sediments (e.g., bivalve mollusks, polychaetes, and some amphipods) are an important group of forage species for popular commercial and recreational fish species like winter flounder, scup, and spot (Steimle et al. 2000). Other predatory fish of Raritan Bay consume small invertebrates that live on the bottom sediments like seven-spine bay shrimp (*Crangon*), hermit crabs, Atlantic rock crabs, and lady crabs. Mysid shrimp, gammarid amphipods, and copepods that may move into the water column during the night form another suite of important prey species.

In addition, some Raritan Bay fish species are themselves important prey items, especially during early life stages. Examples include: bay anchovy, rock gunnel, northern searobin, smallmouth flounder, goby, northern pipefish, lined seahorse, Atlantic menhaden, Atlantic herring, river herring and shads, silversides, juvenile weakfish, butterfish, and silver hake. Habitat characteristics determine the presence of fish forage species such as cunner, a species that prefers structures like piers, bridges, rip-rap, and even shellfish and seagrass beds (Steimle et al. 2000). Although cunner orient to structures, they are preyed upon by species that forage in more open habitats (e.g., summer flounder and skates) which suggests that cunner are vulnerable when away from the shelter of structure.

In order to better characterize the fish community within the study area, fish sampling was conducted during June, July, and September of 2015 and 2017 (**Figures 25a through f**) in the nearshore area of Raritan Bay immediately south of the Staten Island shoreline (see **Table 4**). Seine nets were used to collect fish along the shorelines (2015 and 2017), and beam trawls (2015 only) and otter trawls (2015 and 2017) were used to collect the benthic/demersal and water-column fish species in deeper, nearshore areas. Fish traps were also used to compare use of existing hard structure by fish relative to open water areas lacking structure.

Table 4
Finfish Species With the Potential to Occur within the Study Area

Habitat	Common Name	Scientific Name	Observed Within the Study Area in 2015	Observed Within the Study Area in 2017
Anadromous	**Alewife**	***Alosa pseudoharengus***	B	
Catadromous	**American eel**	***Anguilla rostrata***	B	
Coastal	American sand lance	*Ammodytes americanus*		

Table 4
Finfish Species With the Potential to Occur within the Study Area

Habitat	Common Name	Scientific Name	Observed Within the Study Area in 2015	Observed Within the Study Area in 2017
Anadromous	**American shad**	***Alosa sapidissima***		
Coastal	Atlantic cod	*Gadus morhua*		
Coastal	**Atlantic croaker**	***Micropogonias undulatus***		
Coastal	**Atlantic herring**	***Clupea harengus***		
Coastal	**Atlantic mackerel**	***Scomber scombrus***		
Coastal	**Atlantic menhaden**	***Brevoortia tyrannus***	B, T	B, T
Coastal	Atlantic moonfish	*Selene setapinnis*		
Coastal	Atlantic needlefish	*Strongylura marina*		
Coastal	Atlantic silverside	*Menidia menidia*	B, T	B, T
Anadromous	**Atlantic sturgeon**	***Acipenser oxyrhynchus***		
Freshwater, Coastal	Banded killifish	*Fundulus diaphanous*		
Coastal	**Bay anchovy**	***Anchoa mitchilli***	B, T	B, T
Coastal	**Black sea bass**	***Centropristis striata***	B, P	P, T
Anadromous	**Blueback herring**	***Alosa aestivalis***		
Coastal	**Bluefin tuna**	***Thunnus thynnus***		
Coastal	**Bluefish**	***Pomatomus saltatrix***	B	B, T
Coastal	**Butterfish**	***Peprilus triacanthus***		T
Coastal	**Clearnose skate**	***Raja eglanteria***		
Coastal	**Cobia**	***Rachycentron canadum***		
Coastal	Conger eel	*Conger oceanicus*		
Coastal	Crevalle jack	*Caranx hippos*		
Coastal	Cunner	*Tautogolabrus adspersus*		
Coastal	Fawn cusk eel	*Lepophidium cervinum*		
Coastal	Feather blenny	*Hypsoblennius hentz*		
Coastal	Fourbeard rockling	*Enchelyopus cimbrius*		
Coastal	Fourspine stickleback	*Apeltes quadracus*	B	B
Coastal	Four-spot flounder	*Paralichthys oblongus*		
Freshwater, Coastal	Gizzard shad	*Dorosoma cepedianum*		
Coastal	Goosefish	*Lophius americanus*		
Coastal	Grey snapper	*Lutjanus griseus*		
Coastal	Grubby	*Myoxocephalus aenaeus*		B, T
Anadromous	Hickory shad	*Alosa mediocris*		
Freshwater, Coastal	Hogchoker	*Trinectes maculatus*		B
Coastal	Inland silverside	*Menidia beryllina*		
Coastal	Inshore lizardfish	*Synodus foetens*		
Coastal	**King mackerel**	***Scomberomorus cavalla***		
Coastal	Lined seahorse	*Hippocampus erectus*	T	B, T
Coastal	**Little skate**	***Raja erinacea***		
Coastal	Longhorn sculpin	*Myoxocephalus octodecimspinosus*		
Coastal	Lookdown	*Selene vomer*		
Freshwater, Coastal	Mummichog	*Fundulus heteroclitus*	B	B
Coastal	Naked goby	*Gobiosoma bosci*		B, T
Coastal	Northern kingfish	*Menticirrhus saxatilis*	B, T	
Coastal	Northern pipefish	*Syngnathus fuscus*	B, P, T	B, T
Coastal	Northern puffer	*Sphoeroides maculatus*	B	B, T
Coastal	Northern searobin	*Prionotus carolinus*	T	T
Coastal	Northern stargazer	*Astroscopus guttatus*	B	
Coastal	Oyster toadfish	*Opsanus tau*	B, T	B, P
Coastal	Pinfish	*Lagodon rhomboides*		B
Coastal	Planehead filefish	*Monacanthus hispidus*		
Coastal	Pollock	*Pollachius virens*		

Table 4
Finfish Species With the Potential to Occur within the Study Area

Habitat	Common Name	Scientific Name	Observed Within the Study Area in 2015	Observed Within the Study Area in 2017
Anadromous	Rainbow smelt	*Osmerus mordax*		
Coastal	**Red hake**	***Urophycis chuss***		
Coastal	Rock gunnel	*Pholis gunnellus*		
Coastal	Rough scad	*Trachurus lathami*		
Coastal	**Sandbar shark**	***Carcharhinus plumbeus***		
Coastal	**Scup**	***Stenotomus chrysops***	P, T	P, T
Coastal	Seaboard goby	*Gobiosoma ginsburgi*		
Coastal	Sheepshead minnow	*Cyprinodon variegatus*	B	B
Coastal	Short bigeye	*Pristigenys alta*		
Coastal	Silver hake	*Merluccius bilinearis*		
Freshwater, Coastal	Silver perch	*Bairdiella chrysoura*		
Coastal	Smallmouth flounder	*Etropus microstomus*		
Coastal	Smooth dogfish	*Mustelus canis*		
Coastal	**Spanish mackerel**	***Scomberomorus maculatus***		
Coastal	**Spiny dogfish**	***Squalus acanthias***		
Coastal	**Spot**	***Leiostomus xanthurus***	B	
Coastal	Spotfin butterflyfish	*Chaetodon ocellatus*		
Coastal	Spotted hake	*Urophycis regia*		
Coastal	Striped anchovy	*Anchoa hepsetus*		
Anadromous	**Striped bass**	***Morone saxatilis***	B	B, P
Coastal	Striped cusk eel	*Ophidion marginatum*		
Coastal	Striped killifish	*Fundulus majalis*	B	B
Catadromous	Striped mullet	*Mugil cephalus*		
Coastal	Striped searobin	*Prionotus evolans*	B, T	
Coastal	**Summer flounder**	***Paralichthys dentatus***	T	T
Coastal	Tautog	*Tautoga onitis*	B, T	B, P, T
Anadromous	Three-spine stickleback	*Gasterosteus aculeatus*		
Coastal	Tidewater silverside	*Menidia peninsulae*		
Coastal	Tomcod	*Microgadus tomcod*	T	
Coastal	**Weakfish**	***Cynoscion regalis***	B	
Coastal	White hake	*Urophycis tenuis*		
Coastal	White mullet	*Mugil curema*	B	
Freshwater, Anadromous	White perch	*Morone americana*		B
Coastal	**Windowpane**	***Scophthalmus aquosus***	B, T	T
Coastal	**Winter flounder**	***Pseudopleuronectes americanus***	B, T	B, T
Coastal	**Winter skate**	***Leucoraja ocellata***		
Coastal	Yellowtail flounder	*Limanda ferruginea*		

Notes: Sampling gear codes: B = beach seine, P = fish trap, T = trawl

Boldface indicates those species identified as having EFH in the portion of Raritan Bay near the project site, or those species identified as NOAA Trust Species.

"Coastal" indicates species that most commonly occur in estuarine and/or marine waters.

Sources: Able and Studholme 1993, AKRF et al.1998, Berg and Levinton 1985, LMS 2003a,b, Normandeau 2015a,b NYCDEP 2007, Steimle et al. 2000, USACE 2004a, Woodhead 1990, FishBase: www.fishbase.org; Florida Museum of Natural History: https://www.flmnh.ufl.edu.

Shoreline fishes

Significantly greater abundances of fishes and crabs were collected in seine nets deployed along the shoreline in Raritan Bay in 2015 (29,249 individuals) compared to 2017 (8,395 individuals).

This difference was the result of high abundances of Atlantic silversides collected during July and September 2015. When Atlantic silversides are excluded, total abundances were similar between years (2015: 2,684 individuals, 2017: 2,494 individuals). A total of 46 taxa were collected over the two years; species richness was greater during 2015 (37 taxa) compared to 2017 (29 taxa). Species richness during the sampling program ranged from 12 to 26 taxa per month. In 2015, fewer taxa were observed during June and richness increased significantly in July and September; richness was relatively consistent among months during 2017.

Atlantic silversides, Atlantic menhaden, striped killifish, bluefish, and winter flounder were dominant during both years and represented the majority of the catch in shore seines (2015: 60%, 2017: 92%). Relatively high abundances of tautog, northern kingfish, bay anchovy, white mullet, mummichog, and American eel were observed during 2015 and represented an additional 31% of all organisms (totaling 91%) collected in shore seines that year. During 2017, blue crab and northern pipefish were among the numerically abundant taxa collected in shore seines, representing 4% of the catch (totaling 96% that year). Species evenness was greater in 2015 when more taxa occurred at moderate abundance compared to 2017; among those taxa were longwrist hermit crab, blue crab, weakfish, northern puffer, northern pipefish, jack crevalle, striped bass, black drum, and lady crab.

In 2015, total abundance was greatest during July as a result of high abundances of Atlantic menhaden, striped killifish, tautog, and northern kingfish along the shoreline, but relatively low during June and September. In 2017, greatest abundances were observed during June when Atlantic menhaden and bluefish were in high abundance; decreasing abundances of these species resulted in lower total abundances in July and September 2017.

Nearshore fish and crustaceans

During 2015 and 2017, similar abundances and species richness of fish and crabs were collected in otter trawls deployed in deeper offshore areas of Raritan Bay (2015: 26 taxa and 1,009 individuals, 2017: 29 taxa and 1,309 individuals). A total of 34 taxa were collected in otter trawls during the sampling program. Species richness ranged from 10 to 22 taxa per month. Fewer taxa were observed during June and richness increased in July and September of both years.

Bay anchovy, scup, winter flounder, Say mud crab, and blue crab were dominant during both years and represented the majority of the catch in otter trawls (2015: 76% of all individuals, 2017: 88% of all individuals). Relatively high abundances of lady crab, portly spider crab, and tautog were observed during 2015 and represented 14% of all organisms collected in trawls that year; during 2017 black sea bass and summer flounder were also among the numerically abundant taxa collected in the otter trawl, representing 3% of the catch. These dominant taxa represented 90% and 91% of all fish and crabs collected in the otter trawl during 2015 and 2017, respectively.

Total abundance was lowest during June of both years but increased significantly during September 2015 and during July and September 2017. In 2015, the increased abundances later in the summer were a result of higher abundances of bay anchovy, scup, and Say mud crab. In 2017, higher abundances of bay anchovy, winter flounder, and scup resulted in increased abundances later in the summer.

Fish traps

During 2015 and 2017, similar abundances of fish and crabs were collected in fish traps deployed in Raritan Bay (2015: 428 individuals, 2017: 352 individuals). A total of 12 taxa were collected over the two years and similar species richness was observed during both years (2015: 8 taxa, 2017: 9 taxa). Species richness during the sampling program ranged from 4 to 6 taxa per month and was consistent among months and between years.

Portly spider crab, blue crab, and Say mud crab were dominant during both years and represented the majority of the catch in fish traps (2015: 99% of all individuals, 2017: 87% of all individuals). Relatively high abundance of scup and tautog were observed during 2017 and represented and additional 11% of all organisms collected in traps that year (totaling 98% of all individuals in traps during 2017). Total abundance each month ranged from 55 to 208 individuals; there were no obvious trends in abundance between the two years.

D. EFH DESIGNATIONS

Raritan Bay is within a portion of Atlantic Ocean waters within the Hudson River estuary EFH that is situated in the NMFS 10' x 10' square with coordinates (North) 40°50.0' N, (East) 74°00.0' W, (South) 40°30.0' N, (West) 74°20.0' W. This square includes the following waters: Staten Island, from Port Richmond, NY on the north, east to Great Kills South Harbor of Great Kills, NY and south of Bayonne, NJ. **Table 5** lists the species and life stages of fish identified as having EFH in the portion of Raritan Bay near the project site (NOAA 2016).

Table 5
Essential Fish Habitat Designations – Raritan Bay

Species	Eggs	Larvae	Juveniles	Adults	Spawning Adults
Red hake (*Urophycis chuss*)		M,S	M,S	M,S	
Redfish (*Sebastes fasciatus*)	n/a				
Winter flounder *(Pleuronectes americanus)*	M,S	M,S	M,S	M,S	M,S
Windowpane flounder *(Scophthalmus aquosus)*	M,S	M,S	M,S	M,S	M,S
Atlantic sea herring *(Clupea harengus)*		M,S	M,S	M,S	
Bluefish *(Pomatomus saltatrix)*			M,S	M,S	
Long finned squid (*Loligo pealei*)	n/a	n/a			
Short finned squid (*Illex illecebrosus*)	n/a	n/a			
Atlantic butterfish *(Peprilus triacanthus)*		M	M,S	M,S	
Atlantic mackerel *(Scomber scombrus)*			S	S	
Summer flounder *(Paralichthys dentatus)*		F,M,S	M,S	M,S	
Scup *(Stenotomus chrysops)*	S	S	S	S	
Black sea bass *(Centropristis striata)*	n/a		M,S	M,S	
Surf clam *(Spisula solidissima)*	n/a	n/a			
Ocean quahog *(Arctica islandica)*	n/a	n/a			
Spiny dogfish *(Squalus acanthias)*	n/a	n/a			
King mackerel *(Scomberomorus cavalla)*	X	X	X	X	
Spanish mackerel *(Scomberomorus maculatus)*	X	X	X	X	
Cobia *(Rachycentron canadum)*	X	X	X	X	
Bluefin Tuna (*Thunnus thynnus*)			X		
Sandbar shark *(Carcharhinus plumbeus)*		X(1)		X	
Clearnose skate (*Raja eglanteria*)			X	X	
Little skate (*Leucoraja erinacea*)			X	X	
Winter skate (*Leucoraja ocellata*)			X	X	

Notes:
S: EFH designation includes seawater salinity zone (salinity > 25%)
M: EFH designation includes mixing water / brackish salinity zone (0.5% < salinity < 25%)
F: EFH designation includes tidal freshwater salinity zone (0% < salinity < 0.5%)
X: EFH has been designated within the square for a given species and life stage.
n/a = Either there is no data available on the designated life stages for that species or those life stages are not present in the species' reproductive cycle.
(1) = This species does not have a free-swimming larval stage; rather they are live bearers that give birth to fully formed juveniles. For the purpose of this table, "larvae" for sandbar shark refers to neonates and early juveniles.
Sources: "Summary of Essential Fish Habitat (EFH) Designations" from http://www.greateratlantic.fisheries.noaa.gov/hcd/STATES4/new_jersey/40307410.html; http://www.greateratlanticfisheries.noaa.gov/hcd/nj4.html; http://www.nero.noaa.gov/hcd/skateefhmaps.htm; and NMFS EFH Mapper at http://www.habitat.noaa.gov/protection/efh/habitatmapper/index.html

E. GENERAL DISCUSSION OF POTENTIAL IMPACTS

WETLANDS

A 0.8-acre tidal wetland meeting the three USACE wetland criteria (hydric soils, hydrophytic vegetation, and wetland hydrology), was delineated within the study area on August 10, 2016, east of the location of the proposed earthen berm, within and south of a portion of the proposed eco-revetment between Brighton Street and Manhattan Street, and west of the proposed hybrid dune/revetment (**Attachment 2, Pages 4 through 6**). Currently, there is limited connectivity

between this Phragmites-dominated wetland and the open waters of Raritan Bay due to the presence of the temporary dune and sand clogged inlet structure. The marsh is currently split by a section of unpermitted fill forming a sand bridge that further restricts tidal flow to the eastern end of the wetland. The Proposed Actions would include removal of these obstructions to restore the former tidal exchange between the wetland and Raritan Bay, allowing access for fish that may move through the Bay and connected waters. Phragmites would also be removed, and native saltmarsh plants would be planted. These enhancements may also improve foraging habitat for water birds that occur in the wetland.

CONSTRUCTION

The eco-revetment between Brighton Street and Manhattan Street would be constructed within the northern edge of the delineated wetland (**Figure 18**), affecting approximately 5,637 square feet of the wetland. An approximately 630 square-foot section of the hybrid dune/revetment would also be constructed in this wetland. In total, approximately 6,270 square feet (0.14 acres) of this wetland would be impacted. An existing sand bridge comprising unpermitted fill (approximately 595 square feet and 44 CY) that runs north to south currently divides the delineated wetland and would be removed in order to construct the eco-revetment. The removal of this sand bridge would remove an impediment to tidal exchange within the eastern portion of the wetland, and result in a net change in fill within the wetland of approximately 5,675 square feet (0.13 acres), and 1,176 CY. Permanent impacts to the tidal wetland would be primarily within the portion of the wetland dominated by common reed and while the loss of a portion of the wetland would be an adverse effect, it would be offset by the enhancement of the tidal wetland plant community that would result from the proposed modification of the inlet to Raritan Bay to increase tidal exchange within this wetland. Phragmites would be removed from the wetland, and native saltmarsh plants would be re-established through seeding or planting plugs to supplement the native saltmarsh vegetation that already occurs in the wetland. The existing native saltmarsh vegetation would be retained to the extent possible, and individual plants and seeds would be collected for preservation and replanting as part of wetland enhancement activities.

Temporary impacts would be minimized through the use of measures such as marsh mats or low ground-pressure equipment within the wetland, and installation of erosion and sediment control measures in accordance with the SWPPP prepared as required under the SPDES General Permit GP-0-15-002 for Stormwater Discharges from Construction Activity. Portions of the wetland disturbed during dune/revetment and eco-revetment construction would be restored as necessary (e.g., repair of ruts, stabilization of soil). Wetland vegetation would be planted to replace vegetation temporarily disturbed during construction. With these measures in place, temporary impacts to wetlands during construction and the permanent loss of a small portion of the wetland due to the eco-revetment and hybrid dune/revetment would not result in significant adverse impacts to wetland resources.

OPERATION

The enhancement of the delineated wetland adjacent to the section of eco-revetment and hybrid dune/revetment due to increased tidal exchange (e.g., tidal sluice gates) would benefit wetland resources within the study area. Increased tidal exchange between Raritan Bay and the delineated tidal wetland would increase the frequency and extent of inundation and increase the salinity of the water inundating the wetland. Increased flooding and salinity within the wetland would provide more suitable conditions for native vegetation (e.g., saltmarsh cordgrass [*Spartina alterniflora*], spike grass [*Distichlis spicata*], and salt hay grass [*Spartina patens*]), and

limit or reverse the spread of common reed, an invasive species, within the wetland. Common reed that currently occurs in the delineated wetland would also be removed as part of the wetland enhancement. Biological benchmarks (i.e., elevations at which desirable plants typically grow in the immediate vicinity of the project site) would be established in consultation with NYC Parks to help determine the range of design elevations that would be established for the wetland enhancements following removal of common reed. Onsite and offsite biological benchmark locations would be identified for survey, and hydrologic data would be collected in order to inform the design of the enhancement. The existing native salt marsh plants would be preserved to the extent possible during construction for re-use at the site. Phragmites would be removed from the wetland, and native saltmarsh plants would be re-established through seeding or planting plugs to supplement the native saltmarsh vegetation that already occurs in the wetland. Monitoring activities would be conducted following the completion of wetland enhancement measures, in accordance with a monitoring plan developed in consultation with the appropriate agencies.

WATER QUALITY

CONSTRUCTION

All in-water construction work would be done using barge-based crews and materials. Construction of the Breakwater Project in-water components would have the potential to result in temporary impacts to water quality resulting from sediment resuspension during placement of the breakwater materials, movement of construction barges and vessels, and one-time shoreline restoration. Increases in turbidity due to sediment resuspension can lead to degraded water quality, lower dissolved oxygen levels, and release of contaminants in the sediment. It can also mask pheromones used by migratory fishes to reach spawning grounds, impeding their migration, and can smother immotile benthic organisms and demersal fish (Auld and Schubel 1978, Breitburg 1988, Newcombe and MacDonald 1991, Burton 1993, Nelson and Wheeler 1997). Increases in suspended sediment resulting from the Proposed Actions would be minor, temporary, localized, and would dissipate upon cessation of sediment disturbing activities, and would not have the potential to impact water quality or aquatic biota in these ways.

To construct the breakwater segments, geotextile fabric would be installed on the bottom in a manner that minimizes sediment resuspension. The geotextile fabric underlying the breakwater structures would be prefabricated offsite in large panels and spooled onto a roller that may be floated to the installation location. Sheets would then be cut to the required length and lowered to the bottom using temporary framing or pinning, and held in place permanently using rocks for the breakwater construction. The rock and bio-enhancing concrete would be placed on the geotextile in a manner that limits sediment resuspension. Rocks used for armoring and to construct the breakwaters would be made of “clean” material, further minimizing the potential for release of suspended material into the water column. Crane barges would be moved during construction as needed to construct the breakwater segments, and vessels carrying construction materials would make an average of less than one trip per day over the entire construction period, minimizing the potential for sediment disturbance by vessel movement. Construction vessels would maintain at least 2 feet of clearance from the bottom of the Bay during all tide phases in order to further minimize sediment disturbance.

Construction activities associated with shoreline improvements, including the placement of sand for the shoreline restoration, would be conducted entirely landside. Materials for the Shoreline Project and shoreline restoration are anticipated to be delivered to the project site via construction trucks. Water-based delivery of material is unlikely for the Shoreline Project but

would be explored as design progresses. Should construction materials be delivered via barge for offloading by crane, the vessels would not make contact with the bottom or the shoreline. Movement of these vessels, the tugs that would move them into place, and mooring of the material delivery barge may result in temporary increases in suspended sediment and localized turbidity. As with in-water activities for the breakwaters, sediments mobilized by vessels would be expected to settle quickly and would not result in adverse impacts to water quality. Shoreline improvements would be undertaken in accordance with erosion and sediment control plans and best management practices incorporated into the SWPPP and would not result in adverse impacts to water quality from stormwater discharge during construction. This would include all staging areas, and any areas used for the temporary storage of excavated material.

OPERATION

If they impound waters and restrict flushing or water circulation, in-water structures can lead to stagnant water conditions, which is one of the major potential contributors to degraded water quality. Stagnant waters tend to encourage accumulation of nutrients and fine sediments, and promote overproduction of phytoplankton and algae, which can lead to anaerobic conditions (Goodwin 1991). Stagnant waters can also have higher bacterial content. The Breakwaters Project has been designed to maintain sufficient flushing conditions in the study area to avoid these potential effects. The results of the hydrodynamic modeling indicate negligible changes in tidal flushing resulting from the breakwater alignment. Changes in residence times (time water remains in the area shoreward of the breakwater segments) were modeled as less than a few hours, consistent with tidal exchange. Thus, modeling confirmed that the Breakwaters Project would have negligible, if any, impact on large-scale water circulation and flushing, and thus water quality, in the study area. The use of multiple, shorter structures with sufficient spacing between them, rather than one continuous breakwater, along with their placement at least 200 feet from the shoreline would allow for continuous water exchange through the study area with little obstruction. The breakwaters would create small changes in flow directly surrounding the structures, but would not significantly disrupt existing currents in Raritan Bay, or result in increased erosion of bay bottom at the toe of the breakwater segments.

Flow 3D modeling of localized currents and sediment movement around individual breakwater structures completed for the project indicates the potential for scour/deposition patterns to develop at the breakwater perimeter under ebb and flood tidal flows. The scour and deposition depths are modest, estimated as 0.05 to 0.15 feet of scour and 0.1 to 0.3 feet of deposition under normal tidal and wave conditions. There is indication of reversal of the trends between flood and ebb conditions for most areas. For fixed structures in tidal currents, scour and scour-related deposition typically reach quasi-equilibrium states, including potentially some change in grain size to scour resistant diameters. The modeling results indicate that scour would be localized, within 15 feet of the ends of the breakwater.

The Breakwaters Project has been designed to maintain and restore the existing shoreline within the study area without significantly altering sedimentation rates outside of the study area. Shoreline modeling results indicate that the MHW line would move offshore in response to the lower wave energy in the lee of the breakwaters. Limited localized resuspension of sediment is possible on a seasonal basis, as the seasonal boat launch is installed and removed, but these increases in suspended sediment would be localized, short in duration, and would be expected to dissipate quickly. As described below, sediment resuspension adjacent to the breakwaters would be localized, only occurring within about 15 feet of the ends of the structures. The minimal sediment resuspension would not result in significant increases in turbidity, and would not have

an impact on water quality. The breakwaters have been designed to: minimize sediment transport within reef streets; minimize scour along reef ridges; minimize changes to the reef ridge and street habitats between flood and ebb cycles; and ensure adequate flushing of reef ridges and reef streets.

Elements of the shoreline protection actions associated with the Preferred Alternative have been designed to mitigate the potential effects of stormwater runoff on water quality in Raritan Bay. The Shoreline Project has integrated green infrastructure measures such as bioswales into the design for the eco-revetments and the raised edge to minimize potential impacts to storm sewers from the project elements. Similarly, the parking lot design for the Water Hub at Potential Location 1 would incorporate green infrastructure measures. With these measures in place, the Proposed Actions would not adversely affect water quality of Raritan Bay.

SEDIMENT QUALITY AND CHARACTERISTICS

CONSTRUCTION

Movement of construction vessels and placement of sand for the shoreline restoration and the breakwater structures may result in temporary increases in suspended sediment containing low to moderate levels of contamination. Generally, sediments in the study area were found to contain low levels of contamination with some exceedances of Part 375 unrestricted use concentrations. Any sediments resuspended during construction activities would be expected to settle out on sediment with similar levels of contamination. Erosion and sediment control measures implemented in accordance with the SWPPP would minimize the discharge of sediment to Raritan Bay during construction activities and would not result in significant adverse impacts to sediments in Raritan Bay.

OPERATION

The Proposed Actions would alter sediment characteristics in the footprint of the breakwaters from sand and gravel to hard/rocky bottom. It is anticipated that coarse-grained and sandy material similar to that already found in Raritan Bay would accumulate around the breakwaters consistent with tide and current patterns in the area. Some finer material could settle out in areas of reduced wave energy in the lee of the breakwaters, resulting in minimal deposition behind the structures. Increased deposition is only anticipated to occur at the shoreline. Materials used for construction of the breakwaters would be free of contaminants and would not result in leaching or deposition that could impact sediment quality. Sedimentation rates would be altered, with areas of increased deposition expected along the shoreline within the project site. The breakwaters are designed to dissipate wave energy, so an increase in suspended sediment directly adjacent to the breakwaters is not anticipated to be significant. The breakwaters have also been designed to minimize scour at the base of the structures. Three-dimensional hydraulic modeling indicated that some scour may occur, especially around the ends of the breakwaters. However, any resuspension of sediment would be localized, occurring within about 15 feet from the ends of the breakwaters. Additionally, scour and associated deposition around fixed structures in tidal currents typically reach quasi-equilibrium states, with some change in grain size to scour resistant diameters. As sediments in the study area were found to contain only Class A or Class B contamination levels, the change in sedimentation would not be expected to impact sediment quality either in areas of accretion or scour. Shoreline improvement elements of the Preferred Alternative would not result in significant adverse impacts to sediment quality or characteristics in Raritan Bay.

AQUATIC BIOTA

CONSTRUCTION

The in-water construction activities have the potential to result in temporary adverse impacts to fish and macroinvertebrates due to the following:

- Sand placement associated with the one-time shoreline restoration;
- Loss of soft-bottom benthic habitat and invertebrates within the area of proposed shoreline restoration below MHW;
- Temporary increases in suspended sediment; and
- Other impacts associated with construction such as vessel movement and shading, movement of breakwater material and construction equipment through the water column, and associated underwater noise.

Sand Placement

The proposed one-time shoreline restoration over 2.7 acres below MHWS (2.6 acres of which would be below MHW) between Manhattan Street and Loretto Street would result in a permanent loss of benthic macroinvertebrates unable to move upward through the placed sand. Shoreline restoration would comply with construction windows recommended by NYSDEC and NMFS to protect horseshoe crab spawning activities, and would not occur during the species' peak spawning season (late May to early June). Placement of the 12,341 of sand that would fall below MHWS (11,637 CY below MHW) would likely also be restricted during the spawning season for winter flounder (early January through late May), which has some overlap with the timing of horseshoe crab spawning. The material used for restoration would be similar in composition to the existing sand substrate within the beach at Conference House Park, and macroinvertebrate populations would be expected to re-establish upon completion of sand placement.

Suspended Sediment

Temporary increases in suspended sediment during construction of the Breakwaters Project would be below thresholds that would adversely impact vulnerable life stages of susceptible benthic invertebrates and fish. As discussed above, measures would be implemented to minimize sediment resuspension during placement of sand for the shoreline restoration and of the geotextile and the breakwater materials. Vessels would operate such that there is a minimum clearance of 2 feet between the bottom of vessels and the bay bottom, minimizing the potential for sediment resuspension by construction vessels.

Estuarine organisms experience relatively high levels of suspended sediment as a result of natural processes, but at excessive levels, behaviors like filter feeding or physiological mechanisms may be impaired. Motile fish and benthic invertebrates would be expected to avoid unsuitable conditions such as significant increases in suspended sediment (Clarke and Wilber 2001). Suspended sediment concentrations in the study area averaged between 13.8 and 15.5 mg/L from 1999 to 2014, with peaks between 90.4 and 117.4 mg/L. Average and maximum observed suspended sediment concentrations in the study area fall below levels that could interfere with upstream fish migrations (350 mg/L [NOAA 2001b]). Expected increases in suspended sediment concentrations related to vessel activity during construction would likely be minimal relative to those background levels and would be well below established criteria for harming benthic organisms (<390 mg/L: no anticipated adverse impacts to benthos [USEPA

1986]; deleterious effects of TSS on oyster eggs occurred at 188 mg/L and 1,000 mg/L for clam eggs [Clarke and Wilbur 2001]). Sublethal suspended sediment thresholds for fish, which could lead to gill membrane abrasion, reduced dissolved oxygen availability or consumption, and impaired predator avoidance, are also well above expected levels of suspended sediment that could result from construction. Additionally, suspended sediments would dissipate via dispersion by tidal currents in Raritan Bay and would not result in long term adverse impacts to fish or benthic macroinvertebrates.

Vessel Traffic, Shading, and Material Placement

Construction of the in-water components of the Preferred Alternative would require additional vessel traffic and associated vessel noise in the study area. Raritan Bay is a region of high commercial vessel traffic in the New York-New Jersey Harbor, with an estimated 26,549 commercial trips made in 2014 (approximately 72.5 trips per day) from the ship channel near Sandy Hook to Raritan Bay and upriver through Arthur Kill and Kill Van Kull to Upper New York Bay (USACE 2014). Recreational fishermen made 630 fishing trips in Raritan Bay between 2012 and 2016, averaging 126 trips per year. Thus, it is unlikely that the benthic invertebrate or fish communities in the study area would be adversely impacted by the expected additional vessel traffic or associated underwater noise.

Construction of the breakwaters would require the use of various barges to transport materials and equipment to construction locations. Two types of barges could be used, either spud and anchor or jack-up type barges. One barge would be used as a crane barge to install breakwaters materials, while additional barges would be cycled continuously to deliver materials. The material barges would be moved offsite after materials are unloaded and installed. A typical crane barge covers 7,500 square feet, and material barges would likely be of similar size. The anchored barge would initially shade benthic habitat for three to six weeks, but the shaded area would be small, would only be shaded on the order of hours to days, and the impacted habitat would be expected to recover quickly from the temporary impact. Fish and motile benthic invertebrates would likely avoid the construction area where breakwater materials are being placed on the bottom, and would not experience any adverse impacts from the lowering of these materials through the water column.

OPERATION

The Proposed Actions would result in minimal large scale long-term changes to water circulation and water quality, would stop or reverse shoreline erosion, and would modify local sediment transport to grow the beach while minimizing down-drift impacts. The Preferred Alternative would convert soft-bottom and open water habitat to structurally complex, hard-bottom habitat with a significant degree of vertical relief, resulting in beneficial impacts by contributing to the diversity of habitats and to the connectivity between the network of breakwaters and the Hudson Raritan Estuary. The following operational effects are discussed below:

- Overwater coverage and shading from the potential temporary floating dock associated with the Water Hub (Potential Locations 1 and 2) or the floating Water Hub;
- Effects on water and sediment;
- Conversion of benthic habitat;
- Loss of water column and sand/gravel substrate, and habitat tradeoff;
- Effects on aquatic biota and habitat conversion;

- Effects on nursery habitat and larval recruitment; and
- Potential increase in recreational fishing pressure.

Overwater Coverage and Shading

The Proposed Actions would include the placement of an approximately 210-foot-long by 8-foot-wide seasonal boat launch within Raritan Bay at the Water Hub at Potential Locations 1 and 2 to facilitate research activities at the breakwaters. Water access at Potential Location 2 would be provided by a seasonal floating boat launch similar to this near one of the NYC Parks buildings that would be adaptively reused. NYSDEC usually considers aquatic habitat under an overwater structure to be shade-impacted beyond 15 feet inward from a structure's edges. This is consistent with recent studies that found shading from Hudson River piers to affect the behavior and abundance of fishes under the pier approximately 15 or more feet from the nearest pier edge (Able and Grothues 2011, Able et al. 2013). Shading from piers in the Hudson River has also been found to influence fish community composition, feeding activity, and growth rates (Able and Duffy-Anderson 2006, Duffy-Anderson and Able 1999). Floating structures like the potential boat launch are expected to only minimally influence fish utilization of nearshore habitats (PANYNJ 2015). In a study evaluating the effects of floating structures relative to open water on fish communities, PANYNJ (2015) found that shading effects varied by type of fish and the presence or absence of other shading sources; when the floating structure is the only shade source, fish are more likely to occur in its shadows. In the study area, the surrounding nearshore waters are relatively unshaded, and thus, fish may utilize the shaded area beneath the floating boat launch for shelter during the day. Based on its limited presence in the study area (once per week for less than one day between April and November), the floating Water Hub (Potential Location 3) would not result in adverse impacts due to shading.

Effects on Water and Sediment

Local sediment transport rates and accretion would be altered but the natural processes would not be blocked, as there would still be sediment transport along the shore and tidal circulation around the breakwaters. Based on observed wave conditions, the primary direction of sand movement is from northeast to southwest, past Ward Point and into the Arthur Kill. As such, there is little potential for down-drift impacts from the altered sediment transport and accretion, with the possible exception of reducing the amount of sediment entering the Arthur Kill channel, which would be considered a positive effect. The increased shoreline stability and accretion provided by the Proposed Actions, including the shoreline restoration between Manhattan Street and Loretto Street, would likely benefit spawning horseshoe crabs and other organisms that use beach habitat. Long-term changes in the vicinity of the breakwater segments would likely include the accumulation of broken shells and other calcium carbonate materials originating from sessile and encrusting marine organisms that accumulate on the structure. Such "halos" of biogenic material were observed in the survey of existing artificial habitats in the study area, and observations suggest that the breakwaters will provide the conditions to support the creation of similar "halos" of coarse, biogenic material, which could provide additional habitat heterogeneity.

The breakwaters would not adversely affect tidal flow or flushing in Raritan Bay, and thus would not lead to adverse effects on water quality. According to DELFT 3D water circulation modeling completed for the Breakwaters Project, the breakwaters would have little to no impact on flushing times in the project area, and therefore would have no significant impact on water quality. The individual breakwater segments have wide gaps (typically approximately 200 feet)

between them, allowing for water movement and flushing between the ocean side and landward side of the structures. The crenulated crest of the Type A breakwaters would also allow water to flow over the breakwater (through the crenels) at MHW, which would allow exchange of water between both sides of the breakwater.

The project area for the breakwaters is currently subject to dynamic wave action and tidal currents on a daily basis. As offshore waves travel to the beach, they can cause resuspension of sediment as they pass over shallow water areas and break; larger waves generally re-suspend more sediment. Tidal currents can also re-suspend finer sediment during peak ebb and flood flows. With the Breakwaters Project, wave energy inshore of the breakwaters would be reduced, potentially resulting is less resuspension of sediments by wave action in the near-shore area. Since the breakwaters would dissipate wave energy, increases in suspended sediment directly adjacent to the breakwaters due to wave action are likewise anticipated to be insignificant. The alignment of the reef ridges has been designed to minimize scour effects and related sediment resuspension. While some scour may occur around the ends of the breakwaters, the associated resuspension of sediment would be localized and would not result in a significant adverse impact to water quality.

The introduction of hard substrate in an area of sand and gravel would likely lead to colonization by mollusks and other filter-feeding organisms, which could in turn lead to general small-scale improvements in water quality. These local, small-scale changes in water circulation, water quality, and sediment transport could alter local retention of planktonic invertebrates and fish larvae, and their subsequent recruitment to the breakwaters (Vogel 1994, Mann and Lazier 1996, Lenihan and Peterson 1998), influencing the local fish community and its forage base. Sedimentation effects would largely be confined to the shoreline. Modeling has shown the potential for localized changes to currents in the immediate vicinity of the breakwaters, but adverse impacts to overall tidal flow and flushing are not anticipated.

Conversion of Benthic Habitat

Installation of the breakwater segments would result in the permanent conversion of approximately 11.4 acres of existing sand/gravel substrate and the loss of any benthic invertebrates associated with this habitat that are unable to move from within the footprint. Sand and gravel substrates are the most common type of benthic habitat in the approximately 33,500 acres of nearshore habitat in the Raritan Bay-Sandy Hook Bay complex (USFWS 1997), and the 11.4 acres impacted by construction of the breakwaters would constitute just 0.03 percent of sandy substrate within this complex, and 2 percent of nearshore habitat present within the approximately 610-acre study area within Raritan Bay (the open water area bounded to the north by the shoreline of Staten Island and to the south by the navigation channel). Placement of the geotextile over 11.4 acres would cause a permanent loss of soft bottom benthic habitat in this footprint and a temporary reduction in the availability of benthic prey for various fish species. This 2 percent loss of foraging habitat would occur sequentially over the 11-month construction period (6 months in the first year and 5 months in the second year) as the breakwater segments are installed, rather than all at once. Benthic prey species are expected to recolonize the sand and gravel among the breakwater structures, as well as the breakwaters themselves, following construction. The loss of immotile invertebrates within this area and the loss of open-water, sand/gravel substrate foraging habitat for fish and epibenthic invertebrates would not result in a significant adverse impact to these organisms, as similar foraging habitat would be available adjacent to areas undergoing construction, and benthic prey species, including those that

establish on the breakwater structures, would become available to predators when they recolonize the area following construction.

Loss of Water Column, Loss of Sand/Gravel Substrate, and Habitat Tradeoff

Installation of the breakwater structures would result in the replacement of 11.4 acres of subtidal sand and gravel habitat with subtidal, intertidal, and emergent hard/rocky habitat composed of rock and bio-enhancing concrete of varying sizes. The reef-like breakwater structures would occupy approximately 115,990 CY below MHW in Raritan Bay, which would constitute an equivalent conversion of open water habitat to hard structure (a habitat that was historically present but currently scarce in Raritan Bay). The Breakwaters Project would result in a loss of approximately 3.6 acres of Waters of the U.S. and associated habitat that would no longer be available to aquatic organisms due to the portion of the breakwater structures above MHW. This loss would result in adverse impacts to aquatic resources and would be mitigated pursuant to the Clean Water Act through measures that may include available credits from an approved mitigation bank, and restoration/enhancement of Waters of the US within the Raritan Bay watershed in New York.

One-time sand placement and long-term accretion would also result the loss of shallow water habitat. Accretion would occur gradually over a period of years to decades, allowing aquatic biota to adjust to slowly changing depths and beach slopes near the shoreline over time. As a result of the one-time shoreline restoration, there would be an initial loss of some habitat below MHWS of approximately 2.7 acres, of which 2.6 acres would be below MHW. Over time, no net difference in the quantity of available habitat below MHWS would be expected, as sand initially placed above MHWS would be distributed to areas below MHWS; however, there would be differences in the types of habitat available. The shoreline restoration over time would result in a net gain of intertidal habitat of approximately 0.5 acres and a net loss of subtidal (open water) habitat of approximately 0.5 acres. The conversion of open water habitat would represent a small reduction in this type of habitat in the study area within Raritan Bay, and similar habitat at equivalent water depths would continue to be available in the vicinity. While the breakwaters would replace open water with structured habitat, the structures would not hinder the movement of fish and other aquatic biota through the water column, nor would they disrupt water circulation in Raritan Bay. Fish and other aquatic biota, including anadromous species and early life stages, would be able to pass (either actively or passively) around the individual breakwater segments at any given time.

While the Proposed Actions would result in the loss of some shallow open water habitat, the addition of complex substrate would serve as habitat for foraging and sheltering for a number of species, including those that primarily occupy open water environments. The breakwater structures were designed to include varying levels of elevation and inclination, along with bio-enhancing materials, and varying textures and grain sizes in order to create complex habitat attractive to a wide range of aquatic biota.

The sand and gravel habitat that would be permanently lost in the 11.4-acre footprint of the breakwaters is common in the study area and throughout Raritan Bay and the larger Hudson-Raritan Estuary. The Proposed Actions would not adversely affect the functionality of soft bottom habitat in Raritan Bay on a whole, as only a small portion of the study area (2 percent) would be converted to hard bottom habitat. Historically, Raritan Bay supported a large area of hard substrate habitat composed mainly of oyster reefs (Bain et al. 2007). The loss of these areas has altered the structure and function of the Hudson-Raritan Estuary's benthic ecosystem, and eliminated a significant habitat resource for estuarine fish and invertebrate species which rely on

spatially complex submerged hard structures. The high-relief rocky habitat provided by the breakwaters would be designed to attract and retain habitat-forming benthic invertebrates, shellfish, and bivalves, and return some of this structure and function to the Bay. Reduced wave energy near the breakwaters would provide suitable habitat for zooplankton and planktonic larvae. Increasing the retention of zooplankton and fish larvae could increase the forage supply and, concomitantly, could enrich the ecological community that is expected to colonize the breakwaters.

The potential for any localized increases in suspended material at the breakwater structures and at the shoreline would result in increased food supply for filter-feeding bivalves that feed on suspended particles like organic matter and plankton (SMS 2002). Fluctuations in suspended sediment concentrations and sediment grain size are common in coastal environments (Norkko et al. 2001). As such, estuarine species, including clams, are well-adapted to fluctuating levels of suspended sediments and deposition, and would be expected to adjust to the gradually changing conditions on the landward side of the breakwaters. Filter feeding bivalves, in particular, may benefit from small additions of fine sediment, which can be used as a food source (Anderson et al. 2004). Some burrowing crabs and polychaetes also thrive in depositional environments (Anderson et al. 2004). Deposition of sediments along the shoreline would occur gradually, allowing time for infaunal organisms (e.g., clams) to adjust to appropriate depths in the substrate. Hard clams, for example, which occur in the study area, can escape up to 50 centimeters of overburden if the deposited sediment is similar to its surroundings (Stanley and DeWitt 1983), and would easily adjust to gradually changing conditions.

Because the 11.4-acre area of sand/gravel substrate would be replaced by breakwater structures designed to increase the diversity of available habitats, as described above, the Proposed Actions would be expected to provide long-term benefits in the form of increased ecosystem productivity and diversity provided by the complex breakwater structures, thereby offsetting the permanent loss of sand/gravel benthic habitat. The newly created habitat would be designed to attract habitat forming and augmenting invertebrates and algae that would further facilitate development of a rich and diverse aquatic community. The incorporation of bio-enhancing concrete units would increase the potential for establishment of a benthic community anchored by a healthy population of habitat forming species including mussels, oysters, hard clams, macroalgae, barnacles, bryozoans, tunicates, tubeworms, and sponges. Additionally, porous rock structures have been shown to provide effective aquatic habitat for many species, especially juvenile fish (Beck et al. 2001, Duffy-Anderson et al. 2003, USACE 1986, Lindquist et al. 1985). The Proposed Actions would be consistent with the goal of the Hudson-Raritan Estuary Comprehensive Restoration Plan for the Lower Bay to “develop a mosaic of habitats that provides society with renewed and increased benefits from the estuary environment” while also addressing the project goals of storm wave attenuation and reducing shoreline erosion.

Aquatic Biota and Habitat Conversion

The Breakwaters Project has incorporated a variety of design modifications and techniques to create a set of microhabitats typically absent from standard rubble-mound breakwater structures, which are intended to enhance habitat for the target species functional groups described above. These design measures include: incorporation of bio-enhancing concrete material, reef ridges and streets, inclusion of water retaining features in the intertidal zone, integration of varying levels of elevation and inclination, and creation of a wide range of structural complexity. As such, the Breakwaters Project is anticipated to increase the heterogeneity of aquatic habitat in the study area, and encourage overall higher diversity and species richness of both flora and fauna.

Large-scale design features, such as the number, size, shape, spatial distribution, and orientation of the breakwaters, would contribute in part to the diversity of habitats created by the Breakwaters Project and to the connectivity between the breakwaters and to the Hudson Raritan Estuary (e.g., how free-swimming [nektonic] and planktonic organisms move to and from breakwaters and other estuarine habitats). All but two of the breakwater segments would have a series of four to twelve rocky protrusions or reef ridges that extend approximately 65 feet seaward roughly perpendicular to the main breakwater (see **Figures 3 through 5**), as described above under the project description. These reef ridges and the narrow spaces between them (reef streets) would add to the diversity and complexity of available habitat within the intertidal and subtidal zones, including interstitial spaces between armor units, and could generate additional opportunities for ecological enhancement. Non-uniformity of niches and crevice/void sizes generally enhances the heterogeneity of habitat provided by rocky structures (Musetta-Lambert et al. 2015). The ecological enhancements to the study area resulting from the Breakwaters Project (e.g., reef streets and ridges, approximately 1,000 to 1,200 bio-enhancing concrete armor units, and approximately 850 to 1,200 tide pools) would create a mosaic of high-relief habitat across different elevations, inclinations, and orientations, expanding the niche space for all colonizing organisms, particularly the target species functional groups described above. The reduced energy shoreward of the breakwater structures would also provide refuge for aquatic species along an otherwise exposed shoreline where wave energy can currently be relatively high.

Reef-like structures incorporating ecological considerations in their design attract a diverse and productive suite of organisms that includes colonizing habitat forming invertebrates and algae, macroinvertebrates, and fish. Rubble-mound jetties, rocky features similar to the proposed breakwaters in composition and structure, have been shown to provide food resources (i.e., encrusting organisms like mussels and algae, and interstitial organisms like amphipods and polychaetes) that were not available over adjacent sand substrates (Lindquist et al. 1985). Algal colonizers and macrozoobenthos establish first on the surface of the rocks (Lasalle et al. 1991) and provide surface area for epiphytic organisms, which in turn provide forage for invertebrate grazers and fish.

There would be a brief period of time when the breakwaters are first constructed during which the structures would not be available as foraging habitat, as they would not yet be colonized by habitat forming invertebrates and algae, and macroinvertebrates that provide forage. However, studies have shown that invertebrates and algae rapidly colonize the surfaces of these porous rock structures (Knott et al. 2004, Perkol-Finkel and Sella 2014, Perkol-Finkel and Sella 2015, Van Dolah et al. 1984, Chapman 2002). Van Dolah et al. (1984) recorded early settling and rapid colonization of rubble mound jetties by blue-green algae and barnacles in the intertidal zone, mussels in the subtidal zone, and motile macroinvertebrates (e.g., amphipods and isopods) at all tidal levels within the first year of construction. Eco-enhancing concrete deployed at the Brooklyn Bridge Park waterfront in the New York Harbor was found to have live cover of 70-100% within 3 months of construction; mating blue crabs were also observed at this time. Filter-feeding species and habitat formers (e.g., tunicates, barnacles, sessile polychaetes, sponges, and bivalves) were dominant 10 months after deployment (Perkol-Finkel and Sella 2015). Two years after its deployment at Brooklyn Bridge Park, eco-enhancing concrete showed 90-100% coverage by coralline algae, sponges, gastropods, barnacles, colonial and solitary tunicates, bryozoans, and sessile polychaetes (Perkol-Finkel and Sella 2015).

The types and abundances of organisms found on or under rock structures are influenced by features of the rocks themselves or by features of the available substratum, and colonizers can be

recruited by drifting through the water column or crawling up through the substratum (Chapman 2002). In general, benthic communities found in environments with a great deal of variability or frequent disturbance, such as estuaries, have higher rates of recovery following disturbance (Newell et al. 1998, LaSalle et al. 1991). Recovery rates and the nature of the recolonizing community depends on the availability of individuals from adjacent benthic habitats, the ability to reach the disturbed area, and chance. Early colonizers usually inhabit surface environments, where they provide food for other invertebrates and fish (LaSalle et al. 1991). On the basis of these studies, and the presence of hard bottom habitat and associated macroinvertebrates in the vicinity which could serve as a source for colonization, the period following construction of a particular breakwater segment, during which the sand and gravel habitat within the footprint of the breakwater segment would be lost and that breakwater would provide shelter but not forage habitat, would be expected to be limited to a few months. Additionally, the sequential construction of the breakwaters would allow colonization to begin at the first completed segments while the rest are being constructed, minimizing the period during which sand and gravel foraging habitat would be lost and prey species would not be available on any of the structures. Foraging opportunities would also continue to be available in the surrounding soft-bottom habitat during this time. Therefore, temporal loss of foraging habitat would not result in significant adverse impacts to macroinvertebrates and fish within Raritan Bay.

Given the potential for rapid colonization by sessile communities, the Breakwaters Project would likely enhance foraging and refuge habitat for several target groups of benthic invertebrates and fish affected by the project (Perkol-Finkel and Sella 2014, Sella and Perkol-Finkel 2015). Porous structures provide higher habitat complexity in areas where such habitat is not already present, and in turn can enhance biomass and production of fish species associated with artificial structures (Bohnsack et al. 1997, Carr and Hison 1997, Pickering and Whitmarsh 1997). The highly porous layers of armor stone and riprap on the main breakwater segments and reef ridges, and the void spaces between these features, would allow water flow in and around the structures and provide habitat for motile benthic invertebrates known as cryptofauna, or those organisms which exist in protected or concealed microhabitats.

Features of the breakwaters that would enhance the abundance of small forage species include the maximized vertical relief and surface area below MHW, both of which would allow greater development of attached flora and fauna that serve as food resources for forage species. Because cryptic fish serve as prey for several fish species, blue crabs, and other invertebrates, their presence would not only indicate increased local diversity, but would also add complexity to the existing food web (Mann and Harding 1997, Mann and Harding 1998). These cryptic fish also feed on many of the small benthic invertebrates (e.g., tube worms, amphipods, isopods) expected to be attracted to the breakwater structures.

The Breakwaters Project would create foraging, refuge, and potential spawning habitat well-suited to small, structure-oriented cryptic fish species like tautog, black sea bass, cunner, gobies, blennies, rock gunnel, skilletfish, and oyster toadfish. These species tend to utilize structured habitat for both food and shelter (Lindquist et al. 1985). With the exception of tautog,[6] these taxa were either absent or found in low abundance in the existing conditions surveys, and would likely experience benefits in both uses from the presence of the breakwaters. Fish species with

[6] Tautog were the 6th most abundant species found during sampling in 2015 (159 individuals), but were relatively rare in 2017 (15 individuals).

strong associations to structured habitat (i.e., cryptic fish and structure-oriented fish functional groups) and those that may only use the structure for foraging or in passing (i.e., transient/pelagic forage fish and upper trophic-level transient fish functional groups) would likely benefit from the establishment of assemblages of benthic invertebrates and macroalgae, which serve as food resources for forage fish, on the breakwaters. They would also benefit from the habitat complexity and availability of crevices and void space for sheltering.

Transient/pelagic forage fish like anchovies, silversides, and herring are ubiquitous prey for fish and other predators in the coastal zone. Many of these forage species are filter feeders, generally consuming phytoplankton, zooplankton, and small benthic invertebrates. Benthic invertebrates that establish assemblages on and among the breakwaters would periodically release planktonic larvae, and phytoplankton and zooplankton would congregate in the reef streets and on the lee side of the breakwaters where wave energy is reduced. The colonization of the breakwaters by these prey species would attract transient/pelagic forage fish to the structures, which would in turn attract species in the upper trophic-level group that feed on forage fish species. Numerous species, including black sea bass, bluefish, flounder, and skates, derive trophic support either directly from the encrusting organisms, or indirectly by preying upon smaller forage fish that congregate around rocky structures (USACE 1986). Bluefish and black sea bass, in particular, are known to occur over rubble-mound structures similar to the proposed breakwaters (Lindquist et al. 1985). Clearnose, little, and winter skate, along with recreational and commercial fish such as striped bass, bluefish, and flounder, may also feed on benthic invertebrates and forage fish that colonize the breakwaters and nearby waters. Flounder and bluefish also continue to use sandy substrates surrounding rocky structure for forage opportunities (USACE 1986). While the Breakwaters Project would result in the loss of a small fraction of sand and gravel substrate from nearshore waters of Raritan Bay within the study area, the increased availability of forage fish and benthic invertebrates attracted to the breakwaters would enhance foraging opportunities for species in the upper trophic-level transient functional group.

The portions of the breakwaters that would be in the intertidal zone, and thus exposed at certain times in the tidal cycle, would provide foraging areas for waterbirds to feed on small fish and crustaceans. The potential for increased predation on fish would be limited to a small area at the edges of the structures, and is not expected to result in significant adverse impacts to EFH or other designated species.

Nursery Habitat and Larval Recruitment

Artificial structures have been shown to encourage recruitment and settlement of larvae. Depending on the position of reef-like structures with respect to other hard substrate and on the amount of larval supply, artificial structures may receive recruits that otherwise would not have found suitable habitat for settlement (Carr and Hixon 1997). Since the study area consists almost entirely of sand/gravel substrate with few structured areas, the breakwaters would likely serve as a settlement area for larval fish. The establishment of a fish community on structures like the proposed breakwaters could boost larval production onsite (Stephens and Pondella 2002). Breakwater structures that alter water circulation can act as “fish producers,” in that they encourage establishment of a fish community which results in larval abundance, rather than attracting larvae from other areas (Cenci et al. 2011, Burt et al. 2009). Breakwaters may especially act as fish producers if the availability of similar habitat in an area is limited (Cenci et al. 2011, Stephens and Pondella 2002).

It is likely that the Breakwaters Project would provide enhanced nursery habitat and predatory refugia for species that utilize structure during their early life stages. Predation on certain

juvenile fish has been found to be lower in more structurally complex seagrass beds, suggesting that complexity may lead to better nursery habitat for many species because it increases survivorship (Beck et al. 2001). Early life stages and small fish, which tend to prefer calmer waters, may find refuge in areas where wave energy is reduced (Mikami et al. 2012), like the reef streets and on the lee side of the breakwater structures. Filter feeders, in particular, would benefit from the reduced wave energy, as the availability of detritus, macrophytes, and zooplankton would be greater in these areas (Mikami et al. 2012, Lanford 1981). They may also use shelter provided by the crevices and void space among the rocks to hide from predators.

It has been suggested that juvenile fish aggregate near complex reef-like structures, instead of in open water habitats, for both protection from predation and the availability of fouling prey resources like benthic invertebrates and algae (Duffy-Anderson et al. 2003). USACE (1986) determined that rubble-mound structures serve as nursery habitat for a variety of fish, especially juvenile black sea bass and other structure-oriented species. In a study of fish utilization of rubble-mound jetties in North Carolina, Lindquist et al. (1985) also found that young fish were rapidly attracted to a new jetty during its construction phase, suggesting that juveniles may be attracted to the breakwater structures soon after they are placed on the bottom in the study area.

Recreational Fishing Pressure

Recreational boating and fishing, which currently occur in Raritan Bay, would continue after completion of the Proposed Actions. The installation of the breakwaters could lead to an increased local abundance of structure-oriented reef fish (i.e., black sea bass and tautog) and upper trophic-level transient fish (i.e., summer flounder, striped bass, bluefish, scup, and weakfish), as well as increased fishing pressure by anglers that may target these species in the vicinity of the structured habitat provided by the breakwaters. In Raritan Bay, the main species targeted by recreational fishing include summer flounder, striped bass, and bluefish; black sea bass and scup are also targeted, but in much lower numbers.[7] Utilization of the breakwater habitat by juveniles would lead to higher survival rates in the study area for structure-oriented species. Given the potential of the Breakwaters Project to provide increased foraging and nursery habitat for recreational species, it is likely that more would occur in the study area, and more would be caught through recreational fishing. While this may lead to an increase in fishing pressure for these species, the additional habitat provided by the breakwaters would lead to higher survival of juveniles. Despite the potential for increased capture of adults, which are within the length ranges appropriate for landing (NMFS 2017a), the added fishing pressure would not be expected to deplete populations of these species in the study area due to higher survival of juveniles.

F. POTENTIAL IMPACTS TO EFH SPECIES

An analysis of impacts to EFH for each fish species and life stage listed in **Table 5**,[8] including the likelihood that the species would occur within the project area, is presented below. Much of

[7] Between 2012 and 2016, summer flounder was targeted in 399 fishing trips, followed by striped bass (108 trips), bluefish (65 trips), black sea bass and scup (12 trips each), Atlantic menhaden and tautog (3 trips each), blue shark (2 trips), and bay whiff, gray flounder, windowpane, and weakfish (1 trip each) (NMFS 2017a).

[8] Redfish, long-finned squid, short-finned squid, surf clam, ocean quahog, and spiny dogfish are listed as having EFH within the relevant square; however, there is either no data available for the designated life

the habitat and life history information provided in this assessment was obtained from the NMFS EFH Source Documents. Sources of additional information are cited appropriately.

In summary, the Proposed Actions would have both temporary and permanent impacts on EFH and NOAA-Trust Resources. By design, the Preferred Alternative is expected to benefit the target species groups identified in **Table 3**. Bivalve habitat-forming sessile invertebrates, such as blue mussels and hard clams, would benefit from the hard substrate provided by the breakwaters and from the increased availability of food resources (i.e., particulate matter, detritus) in areas of decreased wave energy. The breakwaters would provide habitat for structure-oriented fish, such as black sea bass and scup, in an area where there was previously no structured habitat. Transient/pelagic forage fish, including river herring, shad, menhaden, silversides, bay anchovy, and others, would benefit from the increased availability of foraging habitat on and among the breakwaters. These fish largely feed on zooplankton and macroinvertebrate larvae, which would thrive in areas of reduced wave energy around the breakwater structures. Increased habitat for forage fish would lead to higher occurrence of these species in the study area, which would in turn provide foraging habitat for upper trophic-level fish including striped bass, bluefish, red hake, scup, weakfish, and flounder. Larger benthic macroinvertebrates, like blue crab and horseshoe crab which consume small fish and crustaceans, would also benefit from the increase in foraging habitat provided by the breakwaters.

ATLANTIC BUTTERFISH (Peprilus triacanthus)

Butterfish occur from Newfoundland to Florida and are most abundant between southern New England and Cape Hatteras. It has been suggested that two populations of butterfish exist. One population appears largely restricted to shoals (less than 20 meters deep) south of Cape Hatteras, and another population occurs in shoals and some deeper waters along the shelf north of Cape Hatteras. Throughout their range, butterfish are found over the entire shelf, inshore, and offshore. Raritan Bay is within an area designated as EFH for larval, juvenile, and adult butterfish. Butterfish stock is not currently considered to be overfished, and overfishing is not occurring (NEFSC 2014).

Adult butterfish can range from 120 to 305 mm (4.7 to 12 inches) in length, and juveniles range from 16 to 120 mm (0.6 to 12 inches). Both juveniles and adults are found in similar habitats and forage in the water column, rather than relying directly on benthic food sources. Butterfish feed mainly on planktonic prey including squid, crustaceans, polychaetes, and small fishes. They serve as prey for many species, including bluefish. Juveniles and adults are eurythermal and euryhaline, and are common near the surface in sheltered bays and estuaries during the spring to autumn months. In the Hudson-Raritan trawl survey, juveniles and adults were found at depths from 3 to 23 meters (10 to 75 feet), salinities from 19 to 32 ppt, and in waters with dissolved oxygen levels between 3 and 10 mg/L. Juvenile and adult butterfish often occur over sandy and muddy substrates and at temperatures from 37°F to 82°F (Cross et al. 1999).

Butterfish typically spawn from June to August in coastal waters, although spawning adults have also been observed in inshore waters of bays and estuaries in waters generally less than 30

stages, or the designated life stages don't exist for the species (see **Table 5**). Since the potential of these species and/or life stages to occur in study area cannot be determined, the general impacts of the Preferred Alternative on aquatic biota, as described in the sections above, would apply to these species, and their life histories and potential impacts from the project are not discussed in detail.

meters (98 feet) deep. Peak egg production occurs in late June and early July in marine waters off Long Island Sound. Newly hatched larvae are between 2 and 16 mm (0.1 to 0.6 inches) in length. Larvae are found at the surface or sheltering in the tentacles of large jellyfish, and are more nektonic (free swimming) than planktonic (drifting with water movements) when they reach 10 to 15 mm (0.4 to 0.6 inches) in length. Larvae are most abundant at water temperatures ranging from 48°F to 66°F and depths from 10 to 120 meters (33 to 394 feet) (Cross et al. 1999). By the time they reach 15 mm (0.6) inches in length, larvae develop differentiated fins and begin to take on the general appearance of an adult. Young-of-the-year (YOY) butterfish typically occur in loose schools near the water's surface and are also commonly found in association with floating structure and within the tentacles of jellyfish.

Butterfish larvae, juveniles, and adults can be found in the New York Bight mainly between May and November. Juveniles and adults have the potential to occur occasionally within the study area, but larvae are more abundant in the deeper saline waters of Long Island Sound and near the continental shelf and are not likely to occur in the shallower waters of the study area in Raritan Bay. While butterfish comprised less than 1% of the fish collected in the Hudson-Raritan Estuary (USACE 2000), Woodhead (1990) reported butterfish to be a common transient in the New York Harbor during the summer. Atlantic butterfish occur over sandy bottoms, like those in the study area, but are not closely associated with the bottom when inshore during the summer and fall. Cooling temperatures associated with late fall trigger an offshore migration to the edge of the continental shelf where waters are warmer, and thus, butterfish are not likely to occur in Raritan Bay during winter or spring. Only one butterfish was collected during fish sampling in the study area in June and July 2017; none were collected during the 2015 sampling efforts.

During in-water construction activities, temporary and localized increases in suspended sediment and loss of bottom habitat and benthic invertebrates would not result in significant adverse impacts to Atlantic butterfish, as this species is not directly dependent on benthic habitats for food or refuge. While the breakwaters would replace open water with structured habitat, the structures would not hinder the movement of Atlantic butterfish through the water column. The loss of sand/gravel substrate in the footprint of the breakwaters would not adversely affect butterfish since the species occurs in the water column and is not closely associated with the bottom when inhabiting inshore waters. Additionally, the 11.4-acre footprint represents a very small portion of Raritan Bay, and similar habitat would continue to be available in the vicinity. The complex hard surface of the breakwater segments would encourage the establishment of encrusting organisms and macroalgae, which would attract small fish that may serve as prey for butterfish. As such, the breakwaters could provide additional foraging habitat for juvenile and adult butterfish during the summer and fall when they occur in Raritan Bay as transients. Macroalgae and other aquatic plants that may establish in the intertidal zone of the breakwaters could provide shelter for YOY and older juvenile butterfish, which are often found in schools near the surface and are associated with floating features.

ATLANTIC MACKEREL (Scomber scombrus)

Atlantic mackerel is a pelagic marine fish that occurs in the western North Atlantic Ocean from Labrador to North Carolina and sustains fisheries from the Gulf of St. Lawrence and Nova Scotia to the Cape Hatteras area. There may be two populations: one occurs in the northern Atlantic and along the New England and Maritime Canadian coast, and the southern population inhabits the mid-Atlantic coast. Both populations overwinter in the deep marine waters at the edge of the continental shelf, generally moving inshore during the spring, and reversing this migration in the fall. EFH for coastal migratory pelagic species such as Atlantic mackerel

includes sandy shoals of capes and offshore bars, high profile rocky bottom and barrier island ocean-side waters, and from the surf to the shelf break zone from the Gulf Stream shoreward. Raritan Bay is within an area designated as EFH for juvenile and adult Atlantic mackerel. The Atlantic mackerel fishery is not considered overfished, and overfishing is not occurring (NEFSC 2006).

Adult Atlantic mackerel can range from 26 cm (10 inches) in their second year to about 40 cm (15.8 inches) in their sixth year. NEFSC trawl surveys observed adults in the spring at temperatures from 41°F to 55°F and in waters up to 1,250 feet in depth. In the summer, adults were found at temperatures from 39°F to 57°F in waters from 10 to 180 meters (33 to 591 feet) in depth. Adults occur in waters with salinities of 25 ppt or greater (Studholme et al. 1999), and are present in the Hudson-Raritan Estuary most commonly from April through May and from October through November (USACE 2000). Atlantic mackerel are opportunistic feeders as juveniles and adults, consuming a wide variety of pelagic organisms including crustaceans, mollusks, polychaete worms, and fishes, and do not rely directly on benthic food sources.

The southern population begins its spawning migration by moving inshore in a northeastern direction along the coast between the Delaware Bay and Cape Hatteras. The timing of migration and spawning is linked to warming water temperatures. Peak spawn for the southern population occurs off New Jersey and Long Island Sound in April and May. Most spawning occurs in the shoreward half of the continental shelf and in water temperatures ranging from 45°F to 57°F (Studholme et al. 1999). Egg and larval development occurs in waters near the spawning grounds.

Juveniles begin exhibiting swimming and schooling behaviors starting at 50 to 50 mm (1.2 to 2 inches) in length, and closely resemble adults at about one year in age. Schools of juveniles occur off the coast of Massachusetts by June, after which they move into the Gulf of Maine for the remainder of summer. In the Hudson-Raritan Estuary, juveniles are present from April to December but are most common from April through June and October through November. They are found in water temperatures ranging from 64°F to 71°F, depths from 16 to 32 feet, salinity ranging from 26 to 29 ppt, and dissolved oxygen levels of 7.3 to 8.0 mg/L (Studholme et al. 1999).

Due to salinity requirements (greater than 25 ppt), Atlantic mackerel are not likely to occur in the study area off the south shore of Staten Island. In the New York Harbor region, they would most likely be found in the more saline waters in the Lower Bay to the east of the study area, where salinity as high as 31 ppt has been measured, or in Sandy Hook Bay to the southeast. Few Atlantic mackerel were collected in trawl surveys conducted from 1992 to 1997 in the Hudson-Raritan estuary; all were small juveniles and most were found on the eastern edge of Staten Island. No Atlantic mackerel were collected during site-specific fish sampling in 2015 or 2017. Because the habitat found in Raritan Bay does not represent a significant portion of the EFH for this species, and individuals would rarely occur in the study area, no significant adverse effects to the EFH for Atlantic mackerel would occur as a result of the Proposed Actions.

ATLANTIC SEA HERRING (Clupea harengus)

Atlantic sea herring is a marine species that occurs throughout the Northwestern Atlantic waters from Greenland to North Carolina. It is most abundant north of Cape Cod and relatively scarce in waters south of New Jersey (USACE 2000). Juvenile and adult Atlantic herring undergo complex north to south and inshore to offshore migrations for feeding, spawning, and overwintering. Raritan Bay is within an area designated as EFH for larval, juvenile, and adult

Atlantic herring. Because this species' stock ranges coastwide, the fraction of the population that may occur within the project area would likely be very small. The Atlantic herring stock in the northeastern United States is not overfished, and overfishing is not occurring (Deroba 2015).

Atlantic sea herring are planktivorous during all life stages. They feed almost entirely on zooplankton and do not rely directly on benthic food sources. Adults reach maturity at about 25 to 27 cm (10 to 11 inches) in length. In the NEFSC bottom trawl surveys, adults were found to be most abundant at water temperatures of 37°F to 43°F and depths ranging from 4.5 to 13.5 meters (14 to 44 feet). They are most commonly found in salinities of 28 ppt or greater (Reid et al. 1999). Juveniles and adults perform diel and semi-diel vertical migrations in response to daily photo periods and turbidity. They are sensitive to light intensity, so activity is highest after sunrise and just before sunset; herring avoid the surface during daylight hours to avoid predators (Reid et al. 1999). Juvenile and adult herring serve as prey for many marine species including striped bass, winter flounder, and skates.

Atlantic herring spawn once per year in the coastal ocean waters of the Gulf of Maine and George's Bank between late August and November. Herring do not spawn in brackish water and rarely move into fresh water (Smith 1985). Post-spawn adults migrate to the New York Bight to overwinter from December to April. The fall migration to overwintering areas is done in tight schools, while the spring migration to spawning areas is much more diffuse. Fish that pass through the mid-Atlantic Bight are typically four years of age or older (USACE 2000).

Larval herring are planktonic, and for fall-spawned fish this stage can last 4 to 8 months. Some larvae remain at the spawning site, while others drift with ocean currents and eventually reach eastern Long Island Sound. In the Gulf of Maine, larvae occur at temperatures ranging from 48°F to 61°F and salinities of 32 ppt. Larvae metamorphose into juveniles at 40 to 50 mm (1.6 to 2.0 inches) total length. During post-metamorphosis, which occurs through April and May, juveniles form large schools and move into shallow waters.

Large schools of juvenile Atlantic herring have been found in the waters off Connecticut and southern Massachusetts in May and June. In the summer and fall, juveniles move out of the nearshore waters to overwinter in deeper waters or near the bottom in offshore areas. They are commonly found at depths ranging from 30 to 135 meters (98 to 443 feet) and in deeper waters in the summer months (Reid et al. 1999). Within Long Island Sound, herring abundance in the spring has been reported at temperatures ranging from 48°F to 50°F, depths from 10 to 30 meters (33 to 98 feet), and salinities from 25 to 28 ppt. Within the New York Harbor Estuary, catches of herring were highest in the deeper portions of the estuary and at temperatures ranging from 37°F to 43°F. Juveniles in the NEFSC bottom trawl surveys in the Harbor Estuary were found at highest abundance in temperatures of 40°F to 43°F and 54°F to 72°F.

Larvae are more likely to occur in higher salinity waters near spawning locations, but both juvenile and adult Atlantic herring could be present in the study area. In the Hudson-Raritan estuary, juvenile herring are most abundant in winter and spring throughout the lower estuary, which includes Raritan Bay. Juveniles can also be found in the waters of Long Island in the fall, although their presence is rare during this time of year. Adults in the Hudson-Raritan estuary are most common in the winter in waters ranging from 15 to 45 feet deep. Neither life stage was found in the estuary by NEFSC trawls in the summer. No Atlantic herring were collected during site-specific fish sampling in 2015 or 2017.

During in-water construction activities, temporary and localized increases in suspended sediment and loss of bottom habitat and benthic invertebrates would not result in significant adverse

impacts to Atlantic herring, as this species is not directly dependent on benthic habitats for food or refuge. While the breakwaters would replace open water with structured habitat, the structures would not hinder the movement of Atlantic herring through the water column. The loss of sand/gravel substrate in the footprint of the breakwaters would not adversely affect Atlantic herring since the species occurs in the water column. Additionally, the 11.4-acre footprint represents a very small portion of Raritan Bay, and similar habitat would continue to be available in the vicinity. Atlantic herring feed on zooplankton, which could increase in density in the calmer waters in the reef streets and on the lee side of the breakwaters, thus providing additional foraging resources for herring.

BLACK SEA BASS (Centropristis striata)

Black sea bass is a marine species that occurs from Massachusetts to Florida; the fishery is divided into two populations delineated by Cape Hatteras, North Carolina. The northern population migrates seasonally: inshore and north in the spring, and offshore and south in the fall. Older fish move offshore sooner than YOY fish and overwinter in deeper waters ranging from 73 to 163 meters (240 to 535 feet) in depth. Raritan Bay is within an area designated as EFH for juvenile and adult black sea bass. The stock was once considered to be overfished; however, with improved recruitment and declining fishing mortality rates since 2007, the black sea bass stock is not currently overfished, and overfishing is not occurring (NEFSC 2016).

Black sea bass is a demersal species that uses benthic habitats in open water and structured areas for feeding and shelter. This species is normally considered a reef fish and is closely associated with structured habitat in estuarine and coastal waters. They are benthic feeders, consuming crabs, shrimp, mollusks, small fishes, and squid. During the summer, adults feed on a variety of both infaunal and epibenthic invertebrates, small fish, and pelagic squid and baitfish. Juvenile black sea bass are found in shallow waters with hard bottom substrates and the occurrence of structure (e.g., shellfish beds, pilings, artificial reefs, piers, etc.). Older juveniles may also use channel habitats. Adults orient to structures, especially during the summer when they occur in coastal waters. They occur on shipwrecks, rocky and artificial reefs, mussel beds, and other objects on the bottom. Black sea bass serve as prey to a number of species including summer flounder, windowpane flounder, striped bass, bluefish, and skates.

Black sea bass can tolerate temperatures as low as 43°F but are most abundant in offshore waters warmer than 48°F and depths of 20 to 60 meters (66 to 197 feet) (USACE 2000). Adults migrate out of estuarine waters in the fall when water temperatures start to decline. During the spring migration, adults move to spawning grounds in deep-water nearshore habitat, and juveniles move into shallow estuaries. Spawning generally takes place in the summer (May-July) for the northern population primarily on the inner continental shelf in waters 20 to 50 meters (66 to 164 feet) in depth between the Chesapeake Bay and Montauk, Long Island, New York. Eggs are buoyant and are found mostly in waters less than 50 meters (164 feet) deep.

Larvae develop primarily in continental shelf waters and are most abundant in the southern portion of the Mid-Atlantic Bight. Larvae quickly move into estuaries and become associated with benthic habitats. YOY in estuaries occupy benthic habitats with shells, amphipod tubes, and deep-channel rubble, and have been observed on inshore jetties in late May to early June. They generally inhabit estuarine areas in the Mid-Atlantic from July to September in waters ranging from 1 to 38 meters (3 to 125 feet) in depth, and are associated with rough bottoms, shell patch substrates, and shelter around manmade structures. YOY are migratory during some portions of their first year. During the fall when water temperatures drop, YOY migrate out of the estuary and away from inner continental shelf nursery areas (Steimle et al. 1999a).

Juvenile sea bass occur in the saline portions of estuaries from Massachusetts to Florida during spring through late fall, and are commonly found around jetties, piers, wrecks, and bottom areas with shell substrate (USACE 2000). Older juveniles are found in shallower waters less than 10 meters (33 feet) deep, but also use channel habitats. In estuaries and the inner continental shelf, juveniles grow up to 19 cm (7.5 inches) in length. They can be found in water temperatures ranging from 43°F to 86°F and salinities ranging from 8 to 38 ppt, but are most common in salinities of 18 to 20 ppt. Juveniles and adults have been collected in the New York Harbor and the Arthur Kill (Smith 1985) and in shallow habitats near piers in the lower Hudson River.

Juvenile black sea bass occur in the Hudson-Raritan Estuary in the spring through fall and are likely found in sheltered habitats during this time. Distribution of adults in New York waters is similar to that of juveniles, although adults tend to occur in deeper bays and coastal waters instead of shallower estuarine waters like Raritan Bay. Black sea bass do not typically occur in Raritan Bay in the winter. Neither life stage is common in the Hudson-Raritan Estuary, but both have been found off the south shore of Staten Island and can occur in the study area. One black sea bass was collected during fish sampling in the study area in June and July 2015, and 6 black sea bass were collected in June and July 2017.

During in-water construction activities, temporary and localized increases in suspended sediment and loss of bottom habitat would not result in significant adverse impacts to black sea bass. The loss of benthic macroinvertebrates within the 11.4-acre footprint of the breakwater segments would be minimal compared to the amount of similar foraging habitat that would continue to be available in the study area. Additionally, the loss of this area would occur sequentially rather than all at once, and black sea bass would be able to continue foraging in the area during construction. This species is structure-oriented and both juveniles and adults would be attracted to the structure provided by the breakwater segments, especially since no similar structure currently exists in the study area. The design of the breakwaters, including their complexity, porousness, and the presence of crevices and void space, would provide a suite of structured habitats suitable for black sea bass, where they would find both refuge and foraging opportunities. Black sea bass feed on a variety of organisms including crabs, mollusks, and small fish, all of which are expected to establish populations on and among the breakwaters. Black sea bass serve as prey for a number of upper trophic-level species including summer flounder, striped bass, and bluefish, which are important recreational species in New York and New Jersey waters. The increase in available habitat for black sea bass provided by the breakwaters could provide additional foraging opportunities for these upper trophic-level species. In Raritan Bay, black sea bass is not typically targeted by recreational fishing; if caught, they are usually released. Between 2012 and 2016, 235 black sea bass were caught by recreational fishing boats in Raritan Bay and 211, or 90%, were released (NMFS 2017a). The average length of landed fish was 14.7 inches TL (37 cm), which is within the length range for adult black sea bass (NMFS 2017a). Given the species' strong association with reef-like habitat, it is likely that more black sea bass would occur in the study area, and more would be caught through recreational fishing. It is also likely that they would continue to be released back to the Bay. The additional foraging and sheltering habitat provided by the breakwaters could lead to higher survival of juveniles and smaller adults not within the length range of those that are landed. The potential increase in landings of adult black sea bass would not be expected to deplete the stock in the study area, as Raritan Bay represents a very small area across the range of the population, and nearly all black sea bass caught in the area are released back to the Bay.

BLUEFIN TUNA (Thunnus thynnus)

Bluefin tuna is a marine species that occurs in the Atlantic Ocean and is managed as distinct western and eastern stocks. It is believed that there is a single stock which ranges from Labrador and Newfoundland south into the Gulf of Mexico and the Caribbean, and also off Venezuela and Brazil. The Labrador Current may separate this western stock from that found in the eastern Atlantic Ocean. Adult bluefin tuna identified as part of the western stock may also move to the eastern Atlantic Ocean and back several times during foraging periods. While they are usually oceanic, this species does move close to shore on a seasonal basis. Bluefin tuna migrate from spring spawning grounds in the Gulf of Mexico through the Straits of Florida to feeding grounds off the northeast U.S. coast. Raritan Bay is within an area designated as EFH for juvenile bluefin tuna. Bluefin tuna are overfished, and overfishing is currently occurring (NMFS 2009).

Bluefin tuna are opportunistic feeders, preying on a variety of benthic macroinvertebrates, schooling fish, and cephalopods, including silver hake, Atlantic mackerel, Atlantic herring, krill, sandlance, and squid. During the summer months, they often occur over the continental shelf and embayments to feed on herring, mackerel, and squids. Larvae initially feed on zooplankton but switch to a piscivorous diet at a relatively small size. Maturity is reached at 77 inches total length and 320 pounds; both males and females can grow to more than 1,400 pounds in weight.

Adult bluefin tuna are pelagic and highly migratory. They follow an annual cycle of foraging in June through March off the eastern U.S. and Canadian coasts, and migrate to the Gulf of Mexico and Mediterranean Sea to spawn in April, May, and June. Not much is known about the spawning habits and eggs of bluefin tuna, however they appear to prefer continental slope waters no less than 100 meters (328 feet) deep with moderate sea surface temperatures, moderate currents, low surface chlorophyll concentrations, and moderate wind speeds. After spawning, they move to feed in waters over the continental shelf and slope, in the Gulf Stream, throughout the South and Mid-Atlantic Bights and the Gulf of Maine, and over the Nova Scotia shelf.

Larval bluefin tuna occur near spawning grounds in the Gulf of Mexico, and have been found as far north as the Carolinas, likely associated with currents from the Florida Straits and not offshore spawning. Larvae generally remain in the Gulf of Mexico until they grow into juveniles. They have been collected within narrow ranges of temperature and salinity, approximately 79°F and 36 ppt. YOY begin movements to juvenile habitats in school formations. Nursery areas are located between Cape Hatteras, North Carolina and Cape Cod, Massachusetts. It is thought that young tuna remain along the edge of the continental shelf of the southeastern U.S., where the Gulf Stream and compressed isotherms can produce upwelling of nutrients, providing an area favorable to growth and food retention. As they grow, bluefin tuna shift from schooling behavior to a more solitary existence.

Based on what is known about habitat associations, early juveniles are more likely to occur along the continental shelf rather than in the study area in Raritan Bay. Older juvenile bluefin tuna may occur in the deeper and more saline portions of Raritan Bay and the Atlantic Ocean nearby, especially during the summer months when individuals move into embayments to feed on herring, mackerel, and squids. They are not likely to occur in the more brackish and shallow waters of the study area. No bluefin tuna were observed during site-specific fish sampling in 2015 or 2017. Because the habitat found in Raritan Bay does not represent a significant portion of the EFH for this species, and individuals would rarely occur in the study area, no significant adverse effects to the EFH for bluefin tuna would occur as a result of the Proposed Actions.

BLUEFISH (Pomatomus saltatrix)

Bluefish is a marine species that occurs in temperate and tropical waters on the continental shelf and in estuarine habitats around the world. In North America, bluefish live along most of the Atlantic coastal waters from Nova Scotia south to the Gulf of Mexico. Bluefish migrate north in the spring and summer and south in fall and winter, generally traveling in groups of fish of similar sizes that are loosely aggregated with other groups. Summering grounds are located in the New York Bight, southern New England, and northern sections of the North Carolina coastline. Wintering grounds occur along the southeastern Florida coast. Raritan Bay is within an area designated as EFH for juvenile and adult bluefish. Bluefish are not overfished, and overfishing is not occurring (NEFSC 2015a).

Adult bluefish are pelagic and highly migratory. They reach a maximum length of about 115 cm (45.3 inches) and occur seasonally in the Mid-Atlantic estuaries between April and October at salinities greater than 25 ppt. They can tolerate temperatures between 35°F and 87°F, but prefer waters ranging from 57°F to 61°F. Adult bluefish are generally considered to be oceanic, but do occur regularly in bays and larger estuaries as well as coastal waters (Bigelow and Schroeder 1953, Fahay et al. 1999). Juvenile bluefish feed on fishes and shrimp in the water column and on the bottom, including alewife and blueback herring, and adults are strictly piscivorous (Buckel and Conover 1997, Fahey et al. 1999).

There are two spawning stocks along the Atlantic coast – a south Atlantic spring spawn, and a mid-Atlantic summer spawn. Fish that spawn in the spring migrate to the Gulf Stream/coastal shelf interface between northern Florida and Cape Hatteras in April and May. Post-spring spawn, smaller bluefish drift west, while the larger fish slowly migrate north along the shelf and west into mid-Atlantic bays and estuaries where they stay until fall. Summer spawning fish migrate to the mid-Atlantic from Cape Cod to Cape Hatteras in June through August. Summer post-spawn fish move towards mid-Atlantic shores and are particularly abundant in Long Island Sound (USACE 2000, Fahay et al. 1999). Bluefish eggs and larvae are pelagic in nearshore and offshore habitat, and are not typically found in coastal estuaries. Eggs and larvae are found in open ocean waters, and larvae occur in the water column up to a depth of 15 meters (49 feet) below the surface.

Juveniles from the spring spawning period drift north in the early summer, and enter nursery habitats in estuaries and bays along the mid-Atlantic coast in June when they measure about 4 to 24 cm (1.6 to 9.4 inches); summer-spawned fish enter the estuaries in middle to late summer (Buckel et al. 1999). Juveniles in the Mid-Atlantic Bight inhabit inshore estuaries from May to October; they are found at water temperatures between 59°F and 86°F and salinities between 23 and 33 ppt. Although juvenile and adult bluefish are both moderately euryhaline, they will occasionally move into estuaries where salinities may be less than 3 ppt. Juveniles use estuaries as nursery habitat, and can be found over sand, mud, silt, or clay substrates, as well as *Spartina* or *Fucus* beds; they have been found at all depths sampled by the NEFSC trawl survey in the Hudson-Raritan estuary, but were most common at 20 meters (66 feet) or less. Juvenile bluefish are sensitive to changes in temperature (Fahay et al. 1999).

Juvenile and adult bluefish occur in the Hudson-Raritan estuary and Sandy Hook Bay during summer and fall and could be found in the study area. Juveniles may use the shallow waters within the study area for nursery and foraging habitat. No bluefish were found in NEFSC trawls in the winter, and only a few adults were collected during the spring months. Bluefish were found at all water depths sampled, but the largest collections were made near navigation channels. Off the south shore of Staten Island, juvenile bluefish were most common in the fall

and occurred east of the study area near Princes Bay. Bluefish was one of the more common species collected in site-specific fish sampling efforts in the study area. During sampling in June and July 2015, 63 bluefish were collected (1.4% of the total catch), and in June and July 2017, 617 bluefish were collected (10.7% of the total catch).

During in-water construction activities, temporary and localized increases in suspended sediment and loss of bottom habitat and benthic invertebrates would not result in significant adverse impacts to bluefish, as this species is not solely dependent on benthic habitats for food or refuge. Adult bluefish are strictly piscivorous, but juveniles also feed on benthic shrimp. The loss of benthic macroinvertebrates, potentially including shrimp unable to move from the construction area, within the 11.4-acre footprint of the breakwater segments would be minimal compared to the amount of similar habitat that would continue to be available in the study area. Additionally, the loss of this area would occur sequentially rather than all at once, and juvenile bluefish would be able to continue foraging on the bottom in the area during construction. Foraging for piscivorous adult bluefish in the water column would not likely be affected during construction. It is expected that encrusting organisms and the small fish that feed on them would establish populations on and among the breakwaters. These forage fish would serve as prey for bluefish, enhancing the foraging habitat for this species. In Raritan Bay, bluefish is one of the more commonly targeted species for recreational fishing trips. Between 2012 and 2016, 645 bluefish were caught by recreational fishing boats in Raritan Bay; about 26% were landed,[9] and the rest were released (NMFS 2017a). The average length of landed fish was 15.4 inches TL (39 mm), which is within the length range for adult bluefish (NMFS 2017a). Given that the breakwaters would provide additional foraging habitat for bluefish in Raritan Bay, recreational fishing pressure on bluefish could increase. The additional foraging habitat provided by the breakwaters could lead to higher survival of juveniles and small adults not within the length range of those that are landed. The potential increase in landings of adult bluefish would not be expected to deplete the bluefish stock in the study area, as Raritan Bay represents a very small area across the range of the stock, and the majority of bluefish caught in the area are released back to the Bay.

COBIA (Rachycentron canadum)

Cobia are large, migratory, coastal pelagic fish. In the western Atlantic Ocean, cobia occur from Massachusetts to Argentina, but are most common along the south Atlantic coast of the United States and in the northern Gulf of Mexico. In the eastern Gulf of Mexico, cobia typically migrate from wintering grounds off the coast of south Florida into northeastern Gulf waters during early spring. They occur in northwest Florida, Alabama, Mississippi, and southeast Louisiana waters during the fall. Some cobia overwinter in the northern Gulf at depths of 100 to 125 meters (328 to 410 feet). Raritan Bay is within an area designated as EFH for eggs, larval, juvenile, and adult cobia. The species is not overfished, and overfishing is not occurring (NMFS 2017b).

EFH for coastal migratory pelagic species such as cobia includes sandy shoals of capes and offshore bars, high profile rocky bottom and barrier island ocean-side waters, and from the surf to the shelf break zone on the shoreward side of the Gulf Stream. For cobia, EFH also includes

[9] Landings refer to the amount of fish harvested from the sea and brought to land. Reported landings provide a record of total catch and can offer guidance for the management of fish stocks.

high salinity bays, estuaries, and seagrass habitat. The Gulf Stream is an EFH because it provides a mechanism to disperse coastal migratory pelagic larvae.

Information on the life history of cobia from the Gulf and the Atlantic Coast of the United States is limited. Cobia are typically considered to be an offshore species and are often found associated with various structures, including oil and gas platforms, buoys, and Sargassum patches (FAO 2017). They are found at temperatures greater than 68°F and salinities greater than 25 ppt. Spawning occurs in both nearshore and offshore waters, where larvae and juveniles can also be found.

No cobia were collected during site-specific fish sampling in 2015 or 2017. If cobia were to occur in the vicinity of the Preferred Alternative, it would likely be as occasional transient individuals, due to cobia's salinity requirements, pelagic nature, and large coastal migrations. Because the habitat found in Raritan Bay does not represent a significant portion of the EFH for this species, and individuals would rarely occur in the study area, no significant adverse effects to the EFH for cobia would occur as a result of the Proposed Actions.

KING MACKEREL (Scomberomorus cavalla)

King mackerel is a marine fish that inhabits Atlantic coastal waters from the Gulf of Maine down to Brazil, including the Gulf of Mexico. There may be two distinct populations of king mackerel. One group migrates from waters near Cape Canaveral, Florida, south to the Gulf of Mexico in the spring to waters of the western Florida continental shelf in the summer. A second group spends spring in the waters off southern Florida, migrates to waters off the coast of the Carolinas in the summer, and continues to the northern extent of the range in the fall. Raritan Bay is within an area designated as EFH for eggs, larval, juvenile, and adult king mackerel. The species is not overfished and overfishing is not occurring (NMFS 2017b).

EFH for king mackerel, like other coastal migratory pelagic species, includes sandy shoals, high profile rocky bottom, barrier island ocean-side waters, and from the surf to the shelf break zone. Overall, temperature is the major factor governing the distribution of king mackerel. The northern extent of its range occurs near Block Island, Rhode Island, near the 68°F isotherm. King mackerel spawn in the northern Gulf of Mexico and along the southern Atlantic coast. Larvae have been collected from May to October, with a peak in September. In the south Atlantic, larvae have been collected at the surface in salinities ranging from 30 to 37 ppt and water temperatures from 70°F to 81°F. Adults are normally found in waters with salinity ranging from 32 to 36 ppt (USACE 2000).

No king mackerel were collected during site-specific fish sampling in 2015 or 2017. If king mackerel were to occur in the vicinity of the Preferred Alternative, it would likely be as occasional transient individuals, and only to the east of the study area where salinities are higher or at times of higher salinity (e.g., low freshwater input). Because the habitat found in Raritan Bay does not represent a significant portion of the EFH for this species, and individuals would rarely occur in the study area, no significant adverse effects to the EFH for king mackerel would occur as a result of the Proposed Actions.

RED HAKE (Urophycis chuss)

Red hake is a bottom-dwelling fish that lives on sand and mud bottoms along the continental shelf from southern Nova Scotia to North Carolina. They are generally concentrated from the southwestern portion of Georges Bank south to New Jersey and make seasonal migrations according to preferred temperature ranges. The species is managed as two stocks: a northern

stock from the Gulf of Maine to northern Georges Bank, and a southern stock from southern Georges Bank to the mid-Atlantic Bight. Raritan Bay is within an area designated as EFH for larval, juvenile, and adult red hake. The southern stock of red hake, which occurs within the New York Harbor Estuary, is not currently considered to be overfished, and overfishing is not occurring (NMFS 2017b).

Red hake are typically associated with habitats that offer sheltering opportunities. Juvenile red hake prey on small benthic and pelagic crustaceans, including larval and small decapod shrimp and crabs, mysids, and amphipods; adults also feed on demersal and pelagic fish and squid. They are preyed upon by larger predators, including striped bass. Distribution surveys suggest that both juveniles and adults are associated with silty, fine sand sediments, and in Long Island Sound, red hake were found mostly on mud substrates. Both life stages utilize sheltered habitat during the day and emerge at night to feed, both in shallow and deeper waters.

Red hake is a common resident of the New York Harbor system (Woodhead 1990), and their distribution is influenced by salinity and water temperature. Adult red hake are associated with temperatures from 36°F to 72°F, salinities from 20 to 33 ppt, and are most commonly found at depths greater than 25 meters (82 feet). In the Mid-Atlantic Bight, red hake occur most often in coastal waters in the spring and fall, and move offshore in the summer to avoid warm water temperatures. Red hake within the Harbor Estuary prefer dissolved oxygen concentrations of 6 mg/L or more, and have been shown to be sensitive to changes in dissolved oxygen levels (Steimle et al. 1999b). Spawning occurs from May to June in the New York Bight (Steimle et al. 1999b). Spawning adults and eggs are common in marine portions of most coastal bays between Rhode Island and Massachusetts; however, Raritan Bay has not been designated as EFH for red hake eggs or spawning adults.

Larval red hake are free floating and occur in the middle and outer continental shelf. They are most common in water temperatures from 52°F to 66°F and depths from 10 to 200 meters (33 to 660 feet). They feed mainly on copepods and other micro-crustaceans. Recently metamorphosed juveniles remain pelagic for about two months, growing to 25 to 30 mm (1 to 1.2 inches) in length. In the fall, juveniles ranging from 35 to 40 mm (1.4 to 1.6 inches) total length descend from the water column to the bottom and seek sheltering habitat in depressions in the sea floor. Settling peaks typically occur in October and November. Older juveniles use scallop shells, mussel beds, surf clam collars, etc., residing near these shelters until their second fall when they move inshore to waters about 55 meters (180 feet) deep. They remain inshore until water temperatures reach 39°F, at which point juveniles move offshore to overwintering habitat (USACE 2000, Steimle et al. 1999b).

Larval red hake are most abundant at the middle and outer continental shelf, but have been reported in the marine waters of the Hudson-Raritan estuary. This life stage is not likely to occur in the more brackish waters of the study area. Juveniles are common in the Hudson-Raritan estuary, especially in the spring to the east of the study area; they are found mainly in deeper channel habitats but may also occur in the study area. Adult red hake have been found during the spring and fall in the eastern portion of Raritan Bay, outside the study area, but are far less common than juveniles. No red hake were collected during site-specific fish sampling in 2015 or 2017.

During in-water construction activities, temporary and localized increases in suspended sediment and loss of bottom habitat would not result in significant adverse impacts to red hake. The loss of benthic macroinvertebrates within the 11.4-acre footprint of the breakwater segments would be minimal compared to the amount of similar foraging habitat that would continue to be

available in the study area. Additionally, the loss of this area would occur sequentially rather than all at once, and red hake would be able to continue foraging in the area during construction. This species is structure-oriented and both juveniles and adults would be attracted to the structure provided by the breakwater segments, especially since no similar structure currently exists in the study area. They would also be able to continue using the sand substrate surrounding the breakwater structures. The design of the breakwaters, including their complexity, porousness, and the presence of crevices and void space, would provide a suite of structured habitats suitable for red hake, where they would find both refuge and foraging opportunities. Red hake feed on a variety of organisms including both benthic and pelagic crustaceans and small fish, both of which are expected to establish populations on and among the breakwaters. Juvenile red hake serve as prey for a number of upper trophic-level species including striped bass, which are an important recreational species in New York waters. The increase in available habitat for red hake provided by the breakwaters could provide additional foraging opportunities for these upper trophic-level species.

SCUP (Stenotomus chrysops)

Scup is a marine fish that occurs primarily on the continental shelf from Cape Cod, Massachusetts, to Cape Hatteras, North Carolina, and undergoes extensive migrations from inshore habitats in the summer to offshore wintering grounds. Scup arrive in the waters off New Jersey and New York by early May. During the summer months, older fish tend to stay in the inshore waters of bays, while younger fish are found in more saline waters of estuaries. Raritan Bay is within an area designated as EFH for eggs, larvae, juveniles, and adults, although EFH is specifically designated for the saline waters of this area. Scup is not currently overfished, nor is overfishing occurring (NEFSC 2015a).

Scup are omnivorous and feed on a variety of polychaetes, infaunal and epibenthic invertebrates and crustaceans, mollusks, and fish eggs and larvae. They are mainly benthic feeders. Juvenile and adult scup near an artificial reef in the Delaware Bay were found to consume a variety of hard-surface epifauna, as well as sand bottom infaunal prey (e.g., amphipods, clams, mussels). Scup larvae are consumed by a variety of planktivores, crustaceans, and fishes. Juveniles and adults are preyed on by bluefish, striped bass, summer flounder, black sea bass, and other coastal fish predators. Scup are demersal and use both open water habitats and structured areas for feeding and possibly shelter. YOY and juveniles have been found over sand, silty-sand, shell, and mud substrates, as well as over mussel beds and eelgrass. Adult habitats are similar to those of juveniles and include soft, sandy bottoms on or near structures including rocky ledges, artificial reefs, and mussel beds. In Long Island Sound, scup exhibit a strong association with mixed sand and mud sediments.

Males and females reach maturity around age 2 and at about 6 inches in length. Spawning occurs in May through August with a peak in June, and occurs principally in the estuaries of New York and New Jersey. Scup eggs are typically found from May through August at depths less than 50 meters (164 feet) and at temperatures ranging from 52°F to 73°F (Steimle et al. 1999c). Newly hatched larvae are pelagic and approximately 2 mm (0.08 inches) long. Larvae are most likely planktivorous. Over approximately three days, diagnostic characteristics of the species are evident, and shortly afterwards, larvae abandon the pelagic phase and become associated with the bottom. They most often occur at temperatures ranging from 57°F to 72°F and salinities of 23 to 33 ppt, in the more saline portions of bays. They can also be found within the water column at depths less than 50 meters (164 feet) (Steimle et al. 1999c).

Juveniles, which range from about 18 to 160 mm (0.7 to 6.3 inches), grow quickly and migrate with the rest of the population to offshore wintering grounds starting in late October, and are absent from inshore waters by the end of November (USACE 2000). By the end of their first year, juveniles can reach up to 16 cm (6.3 inches) in length. They inhabit estuarine intertidal areas at depths of 5 to 12 meters (16 to 39 feet), particularly areas with sand and mud substrates or mussel and eelgrass beds. Juveniles are found at temperatures from about 48°F to 81°F and salinities greater than 15 ppt.

Scup is a common summer transient in the New York Harbor (Woodhead 1990). Juveniles and adults in Raritan Bay are most abundant in spring and summer, and could occur in the study area at this time of year. Larger fish migrate in the fall to overwintering grounds in offshore waters. There is some uncertainty as to the spatial extent and abundance of scup eggs and larvae, but they are thought to be relatively common in the saline portions of the Hudson-Raritan estuary and could occur in the study area. During fish sampling in the study area in June and July 2015, 13 scup were collected (0.3% of the total catch); in June and July 2017, 183 scup were collected (3.2% of the total catch).

During in-water construction activities, temporary and localized increases in suspended sediment and loss of bottom habitat would not result in significant adverse impacts to scup. The loss of benthic macroinvertebrates and within the 11.4-acre footprint of the breakwater segments would be minimal compared to the amount of similar foraging habitat that would continue to be available in the study area. Additionally, the loss of this area would occur sequentially rather than all at once, and scup would be able to continue foraging in the area during construction. This species is structure-oriented during its older life stages, and both juveniles and adults would be attracted to the structure provided by the breakwater segments, especially since no similar structure currently exists in the study area and the structure would be located next to soft, sandy substrate. Increased availability of mussel beds expected to result from establishment on the breakwaters would offer habitat for YOY and older juveniles, which utilize mussel beds as well as sand, mud, or shell substrates. The design of the breakwaters, including their complexity, porousness, and the presence of crevices and void space, as well as the continued presence of soft sandy substrate, would provide a suite of habitats suitable for scup, where they would find both refuge and foraging opportunities. Scup feed on a variety of organisms including polychaetes, epibenthic invertebrates and crustaceans, mollusks, and fish larvae, all of which are expected to establish populations on and among the breakwaters. Scup serve as prey for a number of upper trophic-level species including bluefish, striped bass, and summer flounder, which are important recreational species in New York waters. The increase in available habitat for scup provided by the breakwaters could provide additional foraging opportunities for these upper level species. In Raritan Bay, scup is not typically targeted by recreational fishing; if caught, they are usually released. Between 2012 and 2016, 352 scup were caught by recreational fishing boats in Raritan Bay and 242, or 69%, were released (NMFS 2017a). The average length of landed fish was 9.8 inches TL (25 cm), which is within the length range for adult scup (NMFS 2017a). Given the species' association with structure located next to sandy substrate, it is likely that more scup would occur in the study area, and more would be caught through recreational fishing. It is also likely that the majority would continue to be released back to the Bay. The additional foraging habitat provided by the breakwaters could lead to higher survival of juveniles and small adults not within the length range of those that are landed. The potential increase in landings of adult scup would not be expected to deplete the scup stock in the study area, as Raritan Bay represents a very small area across the range of the stock, and the majority of scup caught in the area are released back to the Bay.

SPANISH MACKEREL (Scomberomorus maculatus)

Spanish mackerel is a marine species that can occur in the Atlantic Ocean from the Gulf of Maine to the Yucatan Peninsula. This species occurs most commonly between the Chesapeake Bay and the northern Gulf of Mexico from spring through fall, and then moves south to overwinter in the waters of south Florida. Raritan Bay is within an area designated as EFH for eggs, larval, juvenile, and adult Spanish mackerel. This species is not overfished, and overfishing is not currently occurring (SEFSC 2012).

EFH for Spanish mackerel, like other coastal migratory pelagic species, includes sandy shoals, high profile rocky bottom, barrier island ocean-side waters, and from the surf to the shelf break zone. Overall, temperature and salinity are the major factors governing the distribution of this species. The northern extent of their range is near Block Island, Rhode Island, near the 68°F isotherm and in water depths of 18 meters (59 feet). They prefer water temperatures from 70°F to 81°F and are rarely found in waters cooler than 64°F; during warm years, they can be found as far north as Massachusetts. Spanish mackerel are primarily piscivorous and feed on pelagic fish (Godcharles and Murphy 1986). Adults generally avoid freshwater or low salinity waters (less than 32 ppt) such as the mouths of rivers (USACE 2000).

Spanish mackerel spawn from late August to late September in the northern extent of their range over the inner continental shelf in waters in waters no cooler than 79°F, about 12 to 34 meters (39 to 112 feet) deep, and usually at night. Eggs are pelagic and hatch after about 25 hours. Most larvae have been collected in coastal waters of the Gulf of Mexico and off the east coast of the United States. They occur in inshore waters with temperatures between 68°F and 86°F and salinities from 28 to 37 ppt. Juvenile Spanish mackerel may use low salinity estuaries (13 to 20 ppt) as nurseries, and tend to stay close inshore in open beach waters (USACE 2000).

Spanish mackerel eggs do not occur in Raritan Bay, as they are spawned over the inner continental shelf. Larvae are not likely to occur in the study area due to high salinity preferences. Adults mainly occur in open water and spend most of their life cycle in the ocean, therefore, this life stage is not likely to be found in the study area in Raritan Bay. Juvenile Spanish mackerel could occur in the study area since they can tolerate lower salinities than other life stages and are known to use low salinity estuaries as nursery habitat. No Spanish mackerel were collected during site-specific fish sampling in 2015 or 2017.

During in-water construction activities, temporary and localized increases in suspended sediment and loss of bottom habitat and benthic invertebrates would not result in significant adverse impacts to Spanish mackerel, as this species is not directly dependent on benthic habitats for food or refuge. The loss of sand/gravel substrate in the footprint of the breakwaters would not adversely affect juvenile mackerel since the species occurs in the water column and is not closely associated with the bottom when inhabiting inshore waters. Additionally, the 11.4-acre footprint represents a very small portion of Raritan Bay, and similar habitat would continue to be available in the vicinity. The complex hard surface of the breakwater segments would encourage establishment of encrusting organisms and macroalgae, which would attract small fish that may serve as prey for juvenile Spanish mackerel. As such, the breakwaters could provide foraging habitat for juvenile mackerel when potentially using the Bay as nursery habitat.

SUMMER FLOUNDER (Paralichthys dentatus)

Summer flounder is a bottom-dwelling species that occurs in the estuarine and shelf waters of the Atlantic Ocean and range between Nova Scotia and southeastern Florida. They are most abundant from Cape Cod, Massachusetts, to Cape Hatteras, North Carolina. Summer flounder

usually appear in the inshore waters of the New York Bight in April, continuing inshore in May and June, and reach peak abundance in July and August. Raritan Bay is within an area designated as EFH for larval, juvenile, and adult summer flounder. In 2002, the stock was considered overfished and was in the 8th year of a 10-year rebuilding program (NMFS 2003, MAFMC 2002). The 2016 stock assessment for summer flounder indicates that the stock is not overfished, but overfishing is occurring. The spawning stock estimate was below the biomass target in 2016; this appears to be driven largely by below-average recruitment (ASMFC 2015a, ASMFC 2016a).

Summer flounder feed in waters along the shelf and in estuaries, and are more active in the daylight hours (USACE 2000). Their diet consists mainly of polychaetes, copepods, crustaceans, shrimp, and small fish, including alewife and blueback herring (Steimle et al. 2000). Summer flounder are mainly associated with sandy substrates where there is a transition from fine sand to silt and clay; juveniles tend to occur more frequently over sandy substrates than mud or silt bottoms. Adults can be found in a variety of habitats with both mud and sand substrates, including marsh creeks, seagrass beds, and sand flats; they also occur over coarse sand and shell substrates. Larger juveniles and adults have been found to utilize eelgrass beds as “blinds,” lying in wait along the perimeter to effectively capture prey.

Adults grow to lengths ranging from about 25 to 71 cm (10 to 28 inches), varying between males and females. They inhabit mainly sand substrates at depths up to 25 meters (82 feet) and temperatures from 36°F to 81°F. Salinity preference ranges from 20 to 30 ppt; however, salinity has a minimal effect on distribution in comparison to substrate type (Packer et al. 1999). Spawning occurs in the New York Bight in nearshore waters outside estuarine systems from September to October and at surface water temperatures of 45°F to 57°F; peak spawning occurs at temperatures between 50°F and 54°F (Packer et al. 1999).

Eggs are pelagic and buoyant and are most abundant in October and November in the northwest Atlantic Ocean. They are found mostly at water depths of 30 to 70 meters (98 to 230 feet). Planktonic larvae measuring 2 to 13 mm (0.08 to 0.5 inches) occur in waters ranging from 32°F to 72°F, but are most abundant in waters between 48°F and 63°F. Larvae are transported to estuarine nurseries by currents. In the Mid-Atlantic Bight, larvae are found at depths from 10 to 70 meters (33 to 230 feet). Nursery habitat in the spring, summer, and fall includes estuarine waters ranging from 0.5 to 5 meters (1.6 to 16 feet) in depth.

Juvenile summer flounder, which measure up to about 28 cm (11 inches), are well adapted to the temperature and salinity ranges present in estuarine habitats. They are able to withstand a wider range of temperatures (greater than 52°F) and salinities between 10 and 30 ppt. Juveniles are distributed throughout the estuary prior to late summer and are more concentrated in sea grass beds as opposed to tidal marshes in the late summer and early fall (USACE 2000). Greater densities of young fish were found in or near inlets (Packer et al. 1999). They can be found on mud and sand substrates in flats, channels, salt marsh creeks, and eelgrass beds (Packer et al. 1999).

As spawning occurs in ocean waters outside estuaries, eggs and larvae are not likely to occur in the shallow waters of the study area in Raritan Bay. Summer flounder juveniles and adults occur year-round in Raritan Bay, and juveniles may use the shallow waters of the study area for foraging and nursery habitat. The greatest densities of adults occur in the summer, and juveniles are most abundant in the spring. In the colder months of fall and winter, both life stages tend to occur in deeper channel waters and are less likely to occur in the study area. Summer flounder

were found in low abundance during fish sampling in the study area in June and July of 2015 and 2017. During both years, summer flounder represented less than 0.15% of the total catch.

During in-water construction activities, temporary and localized increases in suspended sediment and loss of bottom habitat would not result in significant adverse impacts to summer flounder. The loss of benthic macroinvertebrates within the 11.4-acre footprint of the breakwater segments would be minimal compared to the amount of similar foraging habitat that would continue to be available in the study area. Additionally, the loss of this area would occur sequentially rather than all at once, and summer flounder would be able to continue foraging in the area during construction. Summer flounder feed on a variety of organisms including polychaetes, crustaceans, and small fish, all of which are expected to establish populations on and among the breakwaters. While soft-bottom foraging habitat would be lost within the footprint of the breakwaters, species of flounder are known to continue foraging over sandy substrate adjacent to rocky structure (USACE 1986), and summer flounder would be expected to continue foraging among the breakwaters. The presence of sandy substrate around the breakwaters would continue to provide bottom habitat for summer flounder, and the availability of prey around the breakwaters, including scup and other small structure-oriented species, would provide added foraging opportunities. In Raritan Bay, summer flounder is the most commonly targeted species for recreational fishing, but is not commonly landed. Between 2012 and 2016, 1,630 summer flounder were caught and 1,383, or 85%, were released back to the Bay (NMFS 2017a). The average length of landed fish was 19.6 inches TL (49.8 cm), which is within the length range for adult summer flounder (NMFS 2017a). Given the potential for increased foraging habitat among the breakwater structures, it is likely that more summer flounder would occur in the study area, and more would be caught through recreational fishing. While this may lead to an increase in recreational fishing pressure for summer flounder, the additional foraging habitat provided by the breakwaters could lead to higher survival of juveniles, which are not within the length range of fish that are landed. With higher survival of juveniles, despite a potential increase in landings of adult flounder, the added fishing pressure would not be expected to deplete the summer flounder stock in the study area. Additionally, Raritan Bay represents only a small portion of the species' range, and the recreational fishery for summer flounder is less than half the size of the commercial fishery for the species throughout its range (ASMFC 2016b). The potential for more landings through recreational fishing within the study area in Raritan Bay would represent an incremental increase within the overall fishery for the species and would not result in significant adverse impacts to the population.

WINDOWPANE FLOUNDER (Scophthalmus aquosus)

Windowpane flounder are found from the Gulf of St. Lawrence to South Carolina, with greatest abundance in the New York Bight. Windowpane migrate onshore to the shallow shoal waters in the summer and early fall as water temperatures increase, and migrate offshore during the winter and early spring months when temperatures decrease. Raritan Bay is within an area designated as EFH for eggs, larval, juvenile, and adult windowpane, including spawning adults. The southern New England/Middle Atlantic windowpane stock is overfished, but overfishing is not currently occurring (NMFS 2017b).

Windowpane are generally found offshore on sandy bottoms in waters between 50 and 80 meters (164 to 262 feet) deep, or close inshore in estuaries just below the mean low water mark. Juveniles and adults are fairly evenly distributed in the Hudson-Raritan estuary year-round, and are found in deeper channels in the winter and summer months. Both feed primarily on mysid and decapod shrimp and fish larvae; they also feed on small fish including alewife and blueback

herring (Steimle et al. 2000). They occur primarily on sand substrates off southern New England and the Mid-Atlantic Bight, but are frequently found over mud in the Gulf of Maine.

Windowpane spawn in the Mid-Atlantic Bight from April to December in bottom waters where temperatures range from 47°F to 56°F. Spawning peaks in May and again in the fall in the southern portion of the Bight (USACE 2000). Eggs are buoyant and are found in the water column at depths less than 70 meters (230 feet) and temperatures from 39° to 61°F in the spring (March through May) and 57° to 68°F in the fall (September through November) (Chang et al. 1999). After hatching, larvae settle to the bottom. Spring spawned larvae are found predominately in estuaries and coastal shelf waters, and fall spawned larvae are found only in coastal shelf waters. They are typically found in salinities ranging from 18 to 30 ppt in the spring, and in the saline waters of the continental shelf in the fall.

Juvenile windowpane range from about 12 to 22 mm (0.5 to 0.9 inches) and are found year-round in both the shelf waters and in the New York Harbor Estuary. Juveniles are found in bottom water temperatures of 41°F to 73°F, salinities from 22 to 30 ppt, dissolved oxygen levels of 7 to 11 mg/L, and depths of 7 to 17 meters (23 to 56 feet). Adult windowpane reach a maximum total length of about 46 cm (18.1 inches). They have been found in bottom waters in temperatures from 32°F to 73°F, salinities from 15 to 33 ppt, dissolved oxygen concentrations of 2 to 13 mg/L, and depths of less than 25 meters (82 feet) (USACE 2000).

Windowpane eggs and larvae occur in nearshore shelf waters and are not likely present in the study area in Raritan Bay. Juveniles and adults are fairly evenly distributed in the Hudson-Raritan estuary year-round and could occur in the study area. Both life stages are most abundant in the deeper channels in winter and summer. Windowpane were collected in small numbers in the relatively shallow waters of the study area in June and July of both 2015 and 2017. Seven windowpane were collected in 2015, and 4 were collected in 2017.

During in-water construction activities, temporary and localized increases in suspended sediment and loss of bottom habitat would not result in significant adverse impacts to windowpane flounder. The loss of benthic macroinvertebrates within the 11.4-acre footprint of the breakwater segments would be minimal compared to the amount of similar foraging habitat that would continue to be available in the study area. Additionally, the loss of this area would occur sequentially rather than all at once, and windowpane flounder would be able to continue foraging in the area during construction. Windowpane feed mainly on shrimp and fish larvae, which are expected to establish populations on and among the breakwaters. While soft-bottom foraging habitat would be lost in the footprint of the breakwaters, species of flounder are known to continue foraging over sandy substrate adjacent to rocky structure (USACE 1986), and windowpane flounder would be expected to continue foraging among the breakwaters. The presence of sandy substrate around the breakwaters would continue to provide bottom habitat for windowpane flounder, and the availability of prey around the breakwaters would provide added foraging opportunities. In Raritan Bay, windowpane is not typically targeted by recreational fishing; between 2012 and 2016, only one fishing trip targeted the species and none were caught. Given the potential for increased foraging habitat among the breakwater structures, more windowpane could occur in the study area and could be caught if targeted by recreational fishing trips. The additional foraging habitat provided by the breakwaters could lead to higher survival of juveniles in the area, which would help to minimize any impact from the potential increase in landings through recreational fishing. Additionally, Raritan Bay represents only a small portion of the species' range, and additional fishing pressure would not result in significant adverse impacts to the population.

WINTER FLOUNDER (Pseudopleuronectes americanus).

Winter flounder can be found from Labrador to North Carolina, but most commonly occur in estuaries from the Gulf of St. Lawrence to the Chesapeake Bay, including the New York Harbor Estuary (Heimbuch et al. 1994, USACE 2000). This species is an abundant resident in the Harbor Estuary, but may also migrate upriver into fresh water (Heimbuch et al. 1994). Raritan Bay is within an area designated as EFH for eggs, larval, juvenile, and adult winter flounder, including spawning adults. While winter flounder are found throughout the Harbor Estuary, this species is experiencing high fishing rates in excess of natural production and has been in a stock rebuilding program since 1988 (ASMFC 2014a). Currently, the stock is overfished, but overfishing is not occurring (NEFSC 2015b).

Winter flounder live close to shore and swim into shallow waters to feed by sight on small invertebrates and fish fry. Adults range from about 10 to 58 cm (3.9 to 22.8 inches) total length. They generally leave the Harbor Estuary in favor of deeper waters in the summer as water temperatures increase and during the fall and winter when temperatures decrease (Heimbuch et al. 1994). They are typically found at temperatures between 39°F and 54°F and salinities greater than 22 ppt, although they can be found at lower salinities. They are found in water depths of 20 to 48 meters (66 to 158 feet) and are commonly associated with mud, sand, pebble, or gravel bottoms (USACE 2000).

Winter flounder spawn during the winter and early spring, typically at night, in shallow inshore estuarine waters with sandy bottoms. Eggs float in the top 10 inches of water within the intertidal zone and clump together post-fertilization, at which point they sink (Heimbuch et al. 1994, USACE 2000), becoming demersal and adhesive. Eggs are found on a variety of substrates, including sand, muddy sand, and mud and gravel, although sand appears to be the most common substrate for spawning.

Optimal egg hatching occurs at 37°F and in salinities ranging from 15 to 25 ppt. In March through May, winter flounder larvae can be found in the Upper New York Bay near the bottom (Heimbuch et al. 1994). Larval winter flounder are planktonic and are mostly found near spawning grounds inshore. For their first summer, YOY winter flounder remain close to where they were spawned, typically in very shallow estuarine waters ranging from 0.1 to 10 meters (0.3 to 33 feet) in depth, salinities of 5 to 33 ppt, and temperatures less than 82°F. They migrate very little during their first summer.

Larvae develop into juveniles within the estuarine system. Juveniles range from about 13 to 100 mm (0.5 to 3.9 inches) total length. Those larger than 25 mm (0.04 inches) total length are found in a variety of habitat types, regardless of sediment composition or presence of structure. Beyond their first year, juveniles have been found to overwinter in estuaries at temperatures less than 77°F, salinities from 10 to 30 ppt, and depths from 1 to 5 meters (3 to 16 feet) (Pereira et al. 1999). However, in the winter months, juvenile catches generally increased outside estuarine waters and at the same time decreased within estuarine waters, suggesting that juveniles migrate out of the estuary in the winter (Pereira et al. 1999). Juveniles feed on a variety of worms and small crustaceans.

All life stages of winter flounder can occur in the study area in Raritan Bay, including spawning adults. Eggs and larvae are likely to occur in late winter and early spring. Juveniles and adults are well distributed throughout Raritan Bay year-round, and juveniles may use the shallow waters of the study area as foraging and nursery habitat. While adults may migrate out of the estuary during the warmer months, some have been shown to remain inshore throughout the

summer. Winter flounder was one of the most common species collected during site specific sampling during June and July of both 2015 and 2017. In 2015, 93 winter flounder were collected in the study area (2% of the total catch), and in 2017, 411 winter flounder were collected (7.1% of the total catch).

The Proposed Actions would comply with in-water work restrictions during the spawning season for winter flounder (early January through late May). Spawning adults, eggs, and larvae that occur in the study area would be protected by this timing restriction, and would not experience significant adverse impacts as a result of the Proposed Actions. During in-water construction activities, temporary and localized increases in suspended sediment and loss of sand/gravel bottom habitat would not result in significant adverse impacts to winter flounder. The loss of benthic macroinvertebrates within the 11.4-acre footprint of the breakwater segments would be minimal compared to the amount of similar foraging habitat that would continue to be available in the study area. Additionally, the loss of this area would occur sequentially rather than all at once, and winter flounder would be able to continue foraging in the area during construction. Winter flounder feed on worms, crustaceans, invertebrates, and fish larvae, all of which are expected to establish populations on and among the breakwaters. While soft-bottom foraging and spawning habitat for winter flounder would be lost in the footprint of the breakwaters, species of flounder are known to continue foraging over sandy substrate adjacent to rocky structure (USACE 1986), and winter flounder would be expected to continue spawning and foraging among the breakwaters. The presence of sandy substrate around the breakwaters would continue to provide bottom habitat for winter flounder, and the expected increase in the availability of prey around the breakwaters would provide added foraging opportunities. Between 2012 and 2016, winter flounder was not a target species for recreational fishing trips, however, one winter flounder was caught and released to the Bay during this time period. Given the potential for increased foraging habitat among the breakwater structures, more winter flounder could occur in the study area, and juveniles could experience higher survival due to the availability of food and habitat.

SANDBAR SHARK (Carcharhinus plumbeus)

The sandbar shark is found throughout the world in subtropical and warm temperate waters, and is common to many coastal habitats. It is a bottom dwelling species most commonly found in waters 20 to 55 meters (66 to 180 feet) deep. Raritan Bay is within an area designated as EFH for neonate and adult sandbar sharks. This species is overfished, but overfishing is not currently occurring, and is currently in a rebuilding plan under the 2006 Consolidated Atlantic Highly Migratory Species Fishery Management Plan (NMFS 2013).

The sandbar shark is a slow-growing species that feeds primarily on crustaceans, including blue crabs and mantis shrimp, as wells as fishes including menhaden, Atlantic croaker, anchovy, sea robins, windowpane flounder, hogchoker, and skates (Ellis 2003). It is a bottom-dwelling species and is most common in water depths from 20 to 55 meters (66 to 180 feet).

Both males and females reach maturity at about 180 cm (71 inches) total length. Estimates of age-at-maturity range from 15-16 years to 29-30 years, although 15 to 16 years is the commonly accepted estimate. Sandbar sharks produce two litters per year, with each litter consisting of 1 to 14 pups. Young are born in March through July at about 60 cm (24 inches) total length. The sandbar shark uses estuarine nurseries in shallow coastal waters from Cape Canaveral, Florida, to the northern extent of its range in Great Bay, New Jersey (Merson and Pratt 1997). Bays from Delaware to North Carolina are also important nursery areas (Knickle 2001).

EFH for neonates and juveniles, including nursery habitat, includes shallow coastal areas waters up to 25 meters (82 feet) deep from Montauk, Long Island, south to Cape Canaveral, Florida. Juvenile sandbar shark neonates have been found in Delaware Bay during late June, and have been found as far north as Martha's Vineyard, Massachusetts, in the summer. Neonate and juvenile sandbar sharks are most commonly found in salinities greater than 22 ppt and temperatures greater than 70°F.

Given their habitat associations, sandbar shark juveniles have the potential to occur in Raritan Bay and could be present in the study area. Adults could also occur, but are more likely to be found in deeper waters than those in the study area. No sandbar sharks were collected during site-specific fish sampling in 2015 or 2017.

During in-water construction activities, temporary and localized increases in suspended sediment and loss of bottom habitat and benthic invertebrates would not result in significant adverse impacts to sandbar shark. The loss of sandy substrate within the 11.4-acre footprint of the breakwater segments would be minimal compared to the amount of similar foraging habitat that would continue to be available in the study area. Additionally, the loss of this area would occur sequentially rather than all at once, and sandbar shark would be able to continue foraging in the area during construction. The complex hard surface of the breakwater segments would encourage establishment of encrusting organisms and macroalgae, which would attract small fish that may serve as prey for sandbar shark, including flounder and skates. As such, the breakwaters could provide foraging habitat for juvenile and adult sandbar shark when they occur in the Bay.

CLEARNOSE SKATE (Raja eglanteria)

Clearnose skate occurs along the Atlantic coast from the Nova Scotian shelf to northeastern Florida and in the norther Gulf of Mexico from Texas to Florida. It is considered a southern species that is rare in the northern part of its range (Packer et al. 2003a). Clearnose skates may occur in the New York Harbor in spring, summer, and fall, but the population is mainly concentrated around the Delmarva Peninsula and farther south. Both juveniles and adults are distributed in coastal waters from Delaware Bay south to Cape Hatteras, with fewer individuals found in the Hudson-Raritan Estuary and Long Island Sound. Raritan Bay is within an area designated as EFH for juvenile and adult clearnose skates. The northeastern clearnose skate stock is not overfished, and overfishing is not occurring (NMFS 2017b).

Clearnose skate is found on soft bottoms along the continental shelf, but also occurs on rocky or gravel bottoms, and feeds on benthic macroinvertebrates, decapod crustaceans, and fishes. The species is most abundant at water depths less than 111 meters (364 feet). Adults and juveniles are most common over soft sediments at salinities greater than 20 ppt. North of Cape Hatteras, clearnose skates move inshore and northward along the continental shelf during the spring and early summer, and offshore and southward during fall and early winter. This species occurs off the coast of New Jersey and New York from late April through May, and again in October through November (Packer et al. 2003a).

Spawning takes place in spring and summer in coastal waters north of Cape Hatteras. Clearnose skates produce a pair of eggs during each of the multiple reproductive events that take place each season, and may produce up to 35 pairs of eggs in one year. Eggs are deposited and attach to submerged vegetation or structure. They incubate for approximately 90 days, at which time a fully formed juvenile clearnose skate hatches from the egg case.

In the Hudson-Raritan Estuary, juveniles are most abundant at depths of 5 to 7 meters (16 to 23 feet) and temperatures from 55°F to 75°F. Adults are most abundant in waters 5 to 8 meters (16 to 26 feet) deep and in water temperatures from 48°F to 75°F. Both adult and juvenile clearnose skate are found in salinities ranging from 22 to 32 ppt (Packer et al. 2003a). The largest numbers of clearnose skate were found during the summer in bottom waters, particularly in and near channels and south of Coney Island. Smaller numbers were collected in the spring and fall, with very few found in the winter (Packer et al. 2003a).

Juvenile and adult clearnose skates can be found in the Hudson-Raritan estuary year-round, but the greatest abundances occur in summer and fall. Given their habitat requirements, both life stages have the potential to occur in the study area in Raritan Bay. No clearnose skates were collected during site-specific fish sampling in 2015 or 2017.

During in-water construction activities, temporary and localized increases in suspended sediment and loss of bottom habitat would not result in significant adverse impacts to clearnose skate. The loss of benthic macroinvertebrates within the 11.4-acre footprint of the breakwater segments would be minimal compared to the amount of similar foraging habitat that would continue to be available in the study area. Additionally, the loss of this area would occur sequentially rather than all at once, and clearnose skate would be able to continue foraging in the area during construction. This species feeds on benthic macroinvertebrates, crustaceans, and small fish, and has been found to forage over both soft and rocky bottoms. The presence of sandy substrate around the breakwaters would continue to provide bottom habitat for clearnose skate, and the availability of prey around the breakwaters would provide added foraging opportunities. Between 2012 and 2016, clearnose skate was not a target species for recreational fishing trips; however, one was caught and returned to the Bay during this time period. Given the potential for increased foraging habitat among the breakwater structures, more clearnose skate could occur in the study area, and juveniles could experience higher survival due to the availability of food and habitat.

LITTLE SKATE (Leucoraja erinacea)

Little skate occurs from Nova Scotia to Cape Hatteras, and is one of the most abundant bottom-dwelling species in the northwest Atlantic Ocean. The center of distribution is in the northern portion of the Mid-Atlantic Bight and on Georges Bank, where the species is found year-round. Little skates do not make extensive migrations, but do move onshore and offshore with the seasons, generally to shallow waters in the spring and deeper waters in winter (Packer et al. 2003b). Raritan Bay is within an area designated as EFH for juvenile and adult little skate. The northeastern little skate stock is not currently overfished, and overfishing is not occurring (NMFS 2017b).

Little skate are generally found on sand or gravel substrates, but can also be found over mud. In the spring, juveniles and adults in Long Island Sound are most abundant on transitional and sand bottoms in waters less than 9 meters (30 feet) deep. During the fall, little skate were found mainly on transitional bottoms at depths of 9 to 27 meters (30 to 89 feet). During the day, they likely remain buried in sediment depressions, and are more active at night. Little skate feed on a variety of benthic macroinvertebrates but most commonly on decapod crustaceans and amphipods, as well as other benthic crustaceans, polychaetes, bivalves, and fishes.

Spawning occurs year-round in coastal waters, but is most frequent during winter and summer. Little skates produce a pair of eggs during each of the multiple reproductive events that take place each season, and may produce up to 30 pairs of eggs in one year. Eggs are deposited over

sandy bottoms in waters no deeper than 27 meters (89 feet). They incubate for approximately 180 days, at which time a fully formed juvenile little skate hatches from the egg case.

Juveniles in the Hudson-Raritan Estuary are most common over sand and gravel sediments at salinities of 15 to 33 ppt and water depths ranging from 20 to 26 feet. In summer, juveniles make short migrations to deeper waters. Little skate are found at temperatures ranging from 34°F to 63°F, water depths from 5 to 16 meters (16 to 52 feet), and salinities from 18 to 32 ppt. Adults are uncommon in the Hudson-Raritan Estuary, but do occur, and juveniles most commonly occur during winter and spring. Adults that do occur are most common at depths greater than 23 feet and salinities greater than 20 ppt.

Juvenile little skate are fairly well distributed throughout the Hudson-Raritan estuary in fall through spring and could occur in the study area during these months. Juveniles are mainly confined to deeper channel waters in the summer. Adults occur infrequently in the Hudson-Raritan estuary, mainly during fall and winter. No little skates were collected during site-specific fish sampling in 2015 or 2017.

During in-water construction activities, temporary and localized increases in suspended sediment and loss of bottom habitat would not result in significant adverse impacts to little skate. The loss of benthic macroinvertebrates within the 11.4-acre footprint of the breakwater segments would be minimal compared to the amount of similar foraging habitat that would continue to be available in the study area. Additionally, the loss of this area would occur sequentially rather than all at once, and little skate would be able to continue foraging in the area during construction. This species feeds on benthic macroinvertebrates, especially crustaceans, which are expected to establish populations on and among the breakwaters. The presence of sandy substrate around the breakwaters would continue to provide bottom habitat for little skate, and the availability of prey around the breakwaters would provide added foraging opportunities. Between 2012 and 2016, little skate was not a target species for recreational fishing trips; however, 20 were caught and returned to the Bay during this time period. Given the potential for increased foraging habitat among the breakwater structures, more little skate could occur in the study area, and juveniles could experience higher survival due to the availability of food and habitat.

WINTER SKATE (Leucoraja ocellata)

Winter skate occurs from the south coast of Newfoundland and the southern Gulf of St. Lawrence down to Cape Hatteras. The center of distribution is on Georges Bank and in the northern portion of the Mid-Atlantic Bight. Winter skate is often second in abundance to the little skate (Packer et al. 2003c). In the Hudson-Raritan Estuary, this species occurs most commonly from fall through spring, and moves offshore or into deep channel habitats during the summer months. Raritan Bay is within an area designated as EFH for juvenile and adult winter skate. The northeastern stock of winter skate is not currently overfished, and overfishing is not occurring (NMFS 2017b).

Winter skate is most often found on sand or gravel bottoms, but can also be found on muddy substrates. In the spring, winter skate in Long Island Sound are most abundant on sand bottoms, and in the winter they are distributed over sand and gravel. Winter skate are known to remain buried in depressions during the day and are more active at night. They consume a variety of benthic macroinvertebrates, most commonly polychaetes and amphipods, as well as other benthic crustaceans, bivalves, and fishes.

Spawning takes place from summer to early winter. Like other skates, winter skates produce pairs of eggs cases which are deposited and attach to submerged vegetation or structure. A fully formed juvenile winter skate emerges from the egg case following incubation. Juveniles in the Hudson-Raritan Estuary are mainly found at water temperatures ranging from 41°F to 63°F in spring and fall and from 32°F to 45°F in the winter. They mostly remain in waters 5 to 8 meters (16 to 26 feet) deep with salinities between 23 and 32 ppt during those seasons. Few adults are found in the Hudson-Raritan Estuary, but juveniles are well distributed in winter, spring, and fall. In the summer, those individuals present generally occur in deeper channel waters.

Juvenile winter skate are well distributed throughout the Hudson-Raritan estuary in the fall, winter, and spring and could occur in the study area during these months. In the summer, the few juveniles that remain in the estuary are typically confined to deeper channel waters. Adult winter skate occur less frequently and are not likely to occur in the study area. Very few adults have been collected in the estuary, and those that were found were concentrated in deeper channel waters. No winter skates were collected during site-specific fish sampling in 2015 or 2017.

During in-water construction activities, temporary and localized increases in suspended sediment and loss of bottom habitat would not result in significant adverse impacts to winter skate. The loss of benthic macroinvertebrates within the 11.4-acre footprint of the breakwater segments would be minimal compared to the amount of similar foraging habitat that would continue to be available in the study area. Additionally, the loss of this area would occur sequentially rather than all at once, and winter skate would be able to continue foraging in the area during construction. This species feeds on benthic macroinvertebrates, especially polychaetes and amphipods, which are expected to establish populations on and among the breakwaters. The presence of sandy substrate around the breakwaters would continue to provide bottom habitat for winter skate, and the availability of prey around the breakwaters would provide added foraging opportunities. Between 2012 and 2016, winter skate was not a target species for recreational fishing trips and none were caught. Given the potential for increased foraging habitat among the breakwater structures, more winter skate could occur in the study area, and juveniles could experience higher survival due to the availability of food and habitat.

G. POTENTIAL IMPACTS TO OTHER NOAA-TRUST RESOURCES

As part of the Fish and Wildlife Coordination Act, consultation with NMFS may be required if the proposed action results in adverse impacts to other NOAA-trust resources, which include certain species of anadromous fish, shellfish, and crustaceans, and their habitats. Descriptions and discussions of potential impacts to these species, as well as federally threatened and/or endangered species (i.e., sturgeon and sea turtles), are discussed below.

ALEWIFE (*Alosa pseudoharengus*)

Alewife is a pelagic species that occurs from northeastern Newfoundland south to North Carolina. Adults and sub-adults spend most of their lives at sea following a north-south seasonal migration along the Atlantic coast and only return to rivers to spawn. They can adjust to a wide range of salinities and may prefer cooler water temperatures than other anadromous fish. Offshore, alewife have been found most frequently at water depths between 56 and 110 meters (184 to 361 feet). Recent trends in abundance indicate that river herring stock, which includes alewife and blueback herring, is depleted on a coastwide basis and near historic lows; “overfishing” status is not used for river herring because habitat loss, predation, and climate change also contribute to population trends for these species (ASMFC 2017a). Alewife have

been designated as Species of Concern by NOAA due to declines in population over much of their range since the 1960s (NMFS 2017c).

Larval and juvenile alewife feed on small invertebrates, and adults feed on fish eggs, insects, crustacean eggs and larvae, and smaller fish. During the spring months, alewife migrate through Raritan Bay to spawning grounds in the Hudson, Raritan, and Navesink Rivers, where eggs are deposited in slow-flowing water over a variety of substrates including sand, gravel, coarse stone, vegetation, and organic detritus (Mackenzie 1990, Pardue 1983, ASMFC undated). They also spawn in freshwater coves behind barrier beaches and in headwater ponds. Eggs and larvae are found near or slightly downstream of spawning areas. Peak abundance of larval alewife in estuaries occurs in waters with salinities of 1 to 5 ppt at the surface and 1 to 15 ppt at the bottom (Locke and Courtenay 1995).

Transformation from larvae to juvenile is gradual, but is generally complete when the fish reaches approximately 20 mm (0.8 inches) total length (Pardue 1983). Most juveniles emigrate from freshwater estuarine nursery habitats in the rivers where they were spawned between June and November of their first year (Pardue 1983). Juveniles move downstream in response to dropping water temperatures, and are generally found in the lower ends of rivers and in freshwater tributaries. Changes in water flow, water levels, precipitation, and light intensity may also prompt downstream migration. Adult alewife school in open waters and occupy a variety of inshore ocean, estuarine, and freshwater habitats depending on the season (Hildebrand 1963). They are only associated with bottom structure or substrate during spawning, which occurs in rivers and tributaries. Alewife serve as prey for multiple EFH species including windowpane flounder, summer flounder, and juvenile bluefish.

The shallow waters of the study area may provide foraging or nursery habitat for alewife. Adult alewife can occur in Raritan Bay between spring and fall, but likely only as transients rather than residents. During the spring months, adults migrate through Raritan Bay to spawning grounds in the Hudson, Raritan, and Navesink Rivers, and during the fall, they move from freshwater nursery habitats to inshore ocean and estuarine waters. Juveniles may occur near the study area as transients if they are present near the mouth of the Raritan River, or moving between the Raritan and Hudson Rivers. Only one alewife was found during site-specific sampling in June and July 2015; none were found in 2017.

During in-water construction activities, temporary and localized increases in suspended sediment and loss of bottom habitat and benthic invertebrates would not result in significant adverse impacts to alewife, as this species is not directly dependent on benthic habitats for food or refuge. Sediment resuspension would be minimal and would dissipate following sediment disturbing activities, and would not affect alewife migration through the study area to or from riverine habitats. The loss of sand/gravel substrate in the footprint of the breakwaters would not adversely affect alewife since the species occurs in the water column, and only occurs in Raritan Bay as transients. Additionally, the 11.4-acre footprint represents a very small portion of Raritan Bay, and similar habitat would continue to be available in the vicinity. The complex hard surface of the breakwater segments would encourage establishment of encrusting organisms and macroalgae, which would attract small fish that may serve as prey for alewife. As such, the breakwaters could provide additional foraging habitat for juvenile and adult alewife during the spring and fall when they may occur in Raritan Bay as transients.

AMERICAN EEL (*Anguilla rostrata*)

American eel is a catadromous species, spending most of its life in fresh water and spawning in salt water. They are found in fresh, brackish, and coastal waters ranging from the southern tip of Greenland to northeastern South America. The species has a complex life cycle that begins in the Sargasso Sea, which is a large portion of the western Atlantic Ocean located east of the Bahamas and south of Bermuda. American eel habitat includes a wide variety of waters including the open ocean, coastal shelf, coastal estuaries, rivers, small freshwater streams, lakes, and ponds; they can also travel short distances over land and are sometimes found in land locked lakes (ASMFC 2015b). American eels feed on a variety of prey, including insects, fish, fish eggs, crabs, worms, clams, and frogs (USFWS 2011). The American eel population is depleted in U.S. waters due to a combination of historical overfishing, habitat loss, food web alterations, predation, turbine mortality, environmental changes, toxins and contaminants, and disease (ASMFC 2015b).

American eels have several life stages: egg, glass, elver, yellow, and silver. At sexual maturity, adults migrate from the Hudson, Raritan, and Navesink Rivers and their tributaries to spawning grounds in the Sargasso Sea (Mackenzie 1990). Spawning occurs during the winter and spring, from February to April, and is thought to occur in the mid to upper water column in warm saline waters. Eggs hatch on the ocean surface in the Sargasso Sea and drift with currents for about a year as they develop into larvae before reaching the Atlantic coast (USFWS 2015, Fischer 1978). As they approach the continental shelf, larvae metamorphose into miniature transparent eels, called glass eels. Glass eels enter estuaries by drifting on flood tides and actively swimming along shore in estuaries above the tidal influence (ASMFC 2015b).

In estuaries, glass eels eventually change into elvers, which are active mostly at night until water temperatures decrease to about 54°F to 57°F, when they migrate further upstream and become more active during the day. Substrate type may be important for elvers, as they burrow during the day and between movements upstream. Elvers transform into yellow eels, which are sexually immature adults. Some yellow eels continue to migrate upstream, while others remain in brackish river waters as they mature (ASMFC 2015b). Yellow eels can spend up to 40 or more years living in freshwater and brackish habitats before they mature into silver eels and migrate to the Sargasso Sea to spawn; eels that remain in brackish waters tend to mature earlier than those in freshwater (USFWS 2015). They occur in streams and rivers with continuous flow over muddy or silty substrate (Scott and Scott 1988), and during the day, they tend to rest in undercut banks and deep pools near logs or boulders (Fischer 1978).

The shallow waters of the study area may provide foraging or nursery habitat for American eels. Glass eels and elvers occur in tributaries of Raritan Bay, and certain life stages can be found in Raritan Bay year-round. Glass eels can occur in Raritan Bay and in the tidal wetlands along the south shore of Staten Island as they migrate from the continental shelf upstream to riverine habitat. Yellow eels could also move through Raritan Bay, but are more likely to remain in the riverine, wetland, and stream habitats where they develop from the glass eel and elver stages. Silver eels are likely occur in Raritan Bay as they migrate from rivers, including the Raritan River, to spawn in the Sargasso Sea. American eel represented about 1% of the total collected during site-specific fish sampling in June and July 2015, but was not found in 2017.

During in-water construction activities, temporary and localized increases in suspended sediment and loss of bottom habitat and benthic invertebrates would not result in significant adverse impacts to American eel, as this species is not directly dependent on benthic habitats for food or refuge. The loss of sand/gravel substrate within the 11.4-acre footprint of the breakwater

segments would be minimal compared to the amount of similar foraging habitat that would continue to be available in the study area. Additionally, the loss of this area would occur sequentially rather than all at once, and American eel would be able to continue foraging in the area during construction. This species has been more strongly associated with structured habitats like wrecks and pile fields compared to open water sites (Duffy-Anderson 2003), and would likely be attracted to the structure provided by the breakwaters, especially since no similar structure currently exists in the study area. The design of the breakwaters, including their complexity, porousness, and the presence of crevices and void space, would provide a suite of structured habitats suitable for American eel, where they would find both refuge and foraging opportunities. American eels feed on a variety of organisms including small fish, crabs, worms, and clams, all of which are expected to establish populations on and among the breakwaters. American eel serve as prey for a number of upper trophic-level species including striped bass, which is an important recreational species in New York waters. The increase in available habitat for American eel provided by the breakwaters could provide additional foraging opportunities for these upper level species.

AMERICAN SHAD (*Alosa sapidissima*)

American shad is a schooling pelagic species that ranges from the St. Johns River in Florida to the St. Lawrence River in Canada. Shad spend most of their life in the Atlantic Ocean but migrate to coastal rivers and tributaries to spawn. Adults are highly migratory along the coast. Primary summer feeding grounds are located in the Bay of Fundy, and primary wintering grounds are located off the Scotian Shelf, in the Mid-Atlantic Bight from Maryland to North Carolina, and off the Florida Coast. Larval and juvenile shad feed mainly on aquatic insects and crustaceans, and adults are primarily plankton feeders (Stier and Crance 1985). American shad stocks are river-specific, and each major tributary along the Atlantic coast has its own spawning stock. Overall, stocks are at all-time lows due to a combination of historic overfishing, pollution, and habitat loss, and the Hudson River stock has experienced recent declines (ASMFC 2014b).

American shad migrate from offshore waters to spawning grounds in the tidal areas of the Hudson and other major rivers; they can tolerate moderate salinity but spawn in lower salinity waters over sand and gravel substrates (Leggett 1976, Walberg and Nichols 1967). Spawning runs begin in the spring (March-June) and typically last 2 to 3 months, depending on weather conditions (Greene et al. 2009). Adults may spend a few days in estuarine waters prior to upriver migration. Spawning occurs typically in tidal and non-tidal freshwater regions of rivers and tributaries over a variety of substrates, but preferably over sand and gravel bottom with sufficient water movement to eliminate silt deposits (Stier and Crance 1985). The timing of spawning is primarily triggered by water temperature (between 54°F and 70°F), photoperiod, water flow and velocity, turbidity, and depth (less than 10 feet). American shad usually spawn at night or during overcast days

Eggs and larvae are found at or downstream of spawning locations. Eggs are semi-buoyant and may eventually sink to the bottom, and their survival is generally higher where gravel/rubble structure or sand is present (Greene et al. 2009). Rivers, bays, and estuaries associated with spawning rivers are used as nursery habitat for larvae and juvenile shad. Larvae are found in brackish waters with salinities of 7 ppt or less (Leim 1924). They may drift passively into brackish water shortly after hatching, or they can remain in fresh water for the remainder of the summer (Green et al. 2009).

Larvae transform into juveniles 3 to 5 weeks after hatching. Juveniles disperse downstream from nursery grounds in riverine habitats and spend their first summer in the lower portion of their

natal river. While most juveniles use freshwater nursery habitats, some may utilize brackish areas during years of high juvenile abundance (Greene et al. 2009). Juveniles seem to prefer areas where boulder, cobble, gravel, or sand are present. They start to migrate into the open ocean during the fall, where they spend the next few years schooling in large numbers with shad from other regions (ASMFC 2014b). Overwintering habitat for juveniles can include deep channel habitats in estuarine systems (Greene et al. 2009). Upon reaching maturity, around age four or five, adult American shad return to spawning grounds in their natal streams.

Adult American shad can occur in the study area in Raritan Bay during the spring as they migrate to spawning grounds and during the fall as they move back to offshore waters. Juveniles can occur in Raritan Bay in the fall and early winter as they move to offshore waters from upstream nursery habitats. They may also occur in deep channel habitats in the Hudson-Raritan estuary during the winter, but not likely in the study area. Neither eggs nor larvae occur near the study area due to the association of these life stages with freshwater or low salinity spawning and nursery grounds. No American shad were collected during site-specific fish sampling in 2015 or 2017.

During in-water construction activities, temporary and localized increases in suspended sediment and loss of bottom habitat and benthic invertebrates would not result in significant adverse impacts to American shad, as this species is not directly dependent on benthic habitats for food or refuge. Sediment resuspension would be minimal and would dissipate following sediment disturbing activities, and would not affect American shad migration through the study area to or from riverine habitats. The loss of sand/gravel substrate in the footprint of the breakwaters would not significantly adversely affect shad since the species is not closely associated with the bottom and only occurs in Raritan Bay as transients. Additionally, the 11.4-acre footprint represents a very small portion of Raritan Bay, and similar habitat would continue to be available in the vicinity. The complex hard surface of the breakwater segments would encourage establishment of encrusting organisms like crustaceans, which would serve as prey for American shad. Densities of plankton, which also serve as prey for shad, may increase in the calmer waters on the lee side of the breakwaters and in the reef streets. As such, the breakwaters could provide additional foraging habitat for juvenile American shad during fall and winter, and adult American shad during the spring, when they could occur in Raritan Bay as transients. While a commercial and recreational fishery exists for American shad, commercial and recreational fishing for shad is prohibited in both the New York Marine and Coastal District, and in the Hudson River.

ATLANTIC CROAKER (*Micropogonias undulatus*)

Atlantic croaker is a bottom-dwelling species that inhabits inshore coastal waters from the Gulf of Maine to Argentina; it is commonly found from New Jersey to Florida. Throughout its life cycle, Atlantic croaker moves between less saline estuarine waters and riverine habitats to deeper marine waters offshore. Adults generally spend the spring and summer in estuaries and migrate south and offshore in the fall; juveniles migrate from estuarine nursery grounds to ocean habitats by late fall. Adult and juvenile croakers feed on bottom organisms such as marine worms, mollusks, crustaceans, and occasionally small fish; larvae feed on planktonic organisms (ASMFC 2007). They serve as prey for multiple protected species including striped bass, flounder, and weakfish. As of 2010, Atlantic croaker were neither overfished nor experiencing overfishing; a more recent assessment could not determine the stock status of Atlantic croaker (ASMFC 2010a, ASMFC 2017b).

Atlantic croaker reach maturity between the ages of one and two, and at mean total lengths of 6.8 inches for females and 7.2 inches for males (ASMFC 2007). They spawn in warm pelagic waters with a wide range of salinities, including tidal inlets, estuaries, coastal waters and out to the continental shelf. Peak spawning occurs in late fall and winter, although the overall spawning season can last from late summer until early spring. Spawning occurs in water depths ranging from 7 to 81 meters (23 to 266 feet) and in temperatures from 61 to 77°F (ASMFC 2015c). Eggs are pelagic and are found in polyhaline and euryhaline waters. Approximately two to three months after hatching, larvae drift along the bottom via tides and currents to areas with lower salinity (ASMFC 2005). Larvae are initially pelagic when they enter estuarine waters in the winter and spring, but begin moving to brackish bottom waters during ebbing tides (ASMFC 2005). Larvae eventually develop into juveniles at the bottom in low salinity estuarine or riverine waters.

Juveniles are most common in coastal waters from New Jersey southward, often in deeper tidal creeks with mud bottom over shallow flats or marsh creeks, and move into higher salinity waters in the summer and fall (ASMFC 2015c). They tend to concentrate in waters with salinities ranging from 0.5 to 18 ppt, although they can tolerate more extreme salinities if they do not fluctuate dramatically (Diaz and Onuf 1985, ASMFC 2005). While moving through estuaries, juvenile croakers use vegetation, wetlands, soft bottom, and shell bottom habitats for refuge and foraging (ASMFC 2005). By late fall, most juveniles emigrate out of estuaries into open ocean habitats. Juveniles are often found in more turbid areas over mud bottoms with higher organic loads that provide a foraging habitat, but low turbidity is not a limiting factor in juvenile distribution (Diaz and Onuf 1985). Adults are found in a wide range of water temperatures from 41 to 97°F, and salinities between 6 and 20 ppt, and are associated with muddy and sandy substrates in waters shallow enough to support aquatic plant growth (ASMFC 2005). Adults are associated with muddy and sandy substrates containing large amounts of detritus, and are often found on oyster, coral, and sponge reefs, as well as man-made structures such as bridges and piers (ASMFC 2005, ASMFC 2015c).

Shallow estuarine waters along the Atlantic coast, including the Hudson-Raritan estuary, serve as spawning, foraging, and nursery habitat for Atlantic croaker, and all life stages could occur in the study area. Eggs and larvae may occur in Raritan Bay in the late fall and winter, although larvae would be more likely to occur in lower salinity waters that may feed into Raritan Bay. Juvenile Atlantic croaker would most likely occur in the study area in the summer and fall, but would be more common in deeper waters than those at the project site. Adults occur in shallower waters and may be found throughout the study area. No Atlantic croaker were collected during site specific sampling in 2015 or 2017.

During in-water construction activities, temporary and localized increases in suspended sediment and loss of bottom habitat would not result in significant adverse impacts to Atlantic croaker. The loss of benthic macroinvertebrates within the 11.4-acre footprint of the breakwater segments would be minimal compared to the amount of similar foraging habitat that would continue to be available in the study area. Additionally, the loss of this area would occur sequentially rather than all at once, and Atlantic croaker would be able to continue foraging in the area during construction. This species is structure oriented in its older life stages, and both juveniles and adults would be attracted to the structure provided by the breakwater segments, especially since no similar structure currently exists in the study area. The breakwaters would not block passage for eggs and larvae that may drift through the study area prior to settling. The design of the breakwaters, including their complexity, porousness, and the presence of crevices and void space, would provide a suite of structured habitats suitable for Atlantic croaker, where they

would find both refuge and foraging opportunities. Larger Atlantic croaker feed on a variety of organisms including marine worms, mollusks, crustaceans, and small fish, all of which are expected to establish populations on and among the breakwaters. Larvae feed on planktonic organisms, which would be available in the areas of reduced wave energy next to the breakwaters. In Raritan Bay, Atlantic croaker is not typically targeted by recreational fishing. Between 2012 and 2016, no fishing trips targeted the species; however, 47 croaker were caught and all were released (NMFS 2017a). Given the species' association with reef-like and man-made structures, it is likely that more Atlantic croaker would occur in the study area, and more would be caught through recreational fishing. It is also likely that they would continue to be released back to the Bay. The additional foraging and sheltering habitat provided by the breakwaters could lead to higher survival of juveniles and adults. The potential increase in catches of Atlantic croaker through recreational fishing would not be expected to deplete the stock in the study area, as Raritan Bay represents a very small area across the range of the population, and nearly all croaker caught in the area are released back to the Bay.

ATLANTIC MENHADEN (*Brevoortia tyrannus*)

Atlantic menhaden is a pelagic species that inhabits nearshore and inland tidal waters along the Atlantic coast from Nova Scotia to Florida. Menhaden undergo extensive seasonal migrations north and south along the coast. By the summer the population is distributed by size and age, with the larger adults in the northern portion of the range, and sub-adults and some juveniles in the southern portion. They move north through the Mid-Atlantic Bight during spring, and south to Cape Hatteras during the fall (Able and Fahay 1998). Atlantic menhaden are neither overfished nor experiencing overfishing (ASMFC 2017c).

Atlantic menhaden spawn primarily 20 to 30 miles offshore in continental shelf waters during the fall and winter months. In the northern portion of their range, spawning may also occur in the lower reaches of estuaries and coastal bays in waters up to 10 meters (33 feet) deep (Dovel 1971, Rogers and Van Den Avyle 1989). Eggs are buoyant and pelagic. After about 1 to 3 months at sea, larvae are transported by ocean currents from October through June to fresh and brackish water estuaries where much of their early development takes place (Rogers and Van Den Avyle 1989, ASMFC 2015d). Larvae and juveniles use estuaries during the summer before migrating offshore in the fall (Dovel 1971). Larvae feed on plankton, and juveniles and adults are filter feeders. Young menhaden tend to prefer vegetation typical of fresh tidal marshes and swamps over vegetated habitats in open water (Rogers and Van Den Avyle 1989).

Concentrations of young menhaden occur in inshore estuarine waters along the entire Atlantic coast, mainly in the portions of estuaries with lower salinity (less than 5 ppt) (Rogers and Van Den Avyle 1989). Juveniles are found in habitats with unconsolidated bottoms consisting mostly of sand and mud, with mixtures of organic material. They can also be found in rocky coves with mixtures of cobble, rock, and sand bottoms (ASMFC 2015d). Sub-adult habitat includes temperate, nearshore marine and estuarine waters with substrates of sand, mud, and organic material. Adult menhaden appear to prefer water temperatures near 64°F, which may influence their movements and migration. Adults are found near surface waters, typically in areas overlying the continental shelf, and they occur in greatest abundance adjacent to major estuaries (Jones et al. 1978). They move inshore during the summer and into deeper waters in the winter.

The shallow waters of the study area provide foraging and nursery habitat for Atlantic menhaden. Atlantic menhaden larvae may occur in Raritan Bay as they drift into inshore estuarine waters, but would not likely remain in the Bay for an extended period of time due to their salinity preferences. Juveniles and adults can occur in Raritan Bay year-round, and Atlantic

menhaden was one of the most common species collected in site-specific sampling conducted in June and July of both 2015 and 2017. Small menhaden (30 to 55 mm total length) were found during these surveys. In 2015, Atlantic menhaden (all lengths) represented 15.2% of the total catch, and in 2017 they represented 27.2% of the total catch. Atlantic silverside was the only species collected in higher abundance than menhaden in both years.

During in-water construction activities, temporary and localized increases in suspended sediment and loss of bottom habitat and benthic invertebrates would not result in significant adverse impacts to Atlantic menhaden, as this species is not directly dependent on benthic habitats for food or refuge. While the breakwaters would replace open water with structured habitat, the structures would not hinder the movement of Atlantic menhaden through the water column. The loss of sand/gravel substrate in the footprint of the breakwaters would not adversely affect Atlantic menhaden since the species occurs in the water column. Additionally, the 11.4-acre footprint represents a very small portion of Raritan Bay, and similar habitat would continue to be available in the vicinity. Densities of plankton and detritus, which serve as food resources for menhaden, may increase in the calmer waters on the lee side of the breakwaters and in the reef streets. As such, the breakwaters could provide additional foraging habitat for juvenile and adult Atlantic menhaden.

BAY ANCHOVY (*Anchoa mitchilli*)

Bay anchovy is a schooling, pelagic forage species that is ubiquitous in coastal and inshore waters along the Atlantic coast, from the Gulf of Maine to the Gulf of Mexico. In the mid-Atlantic, bay anchovy is most abundant off the coast of New Jersey and in the Chesapeake Bay. Bay anchovy migrate to deeper waters in the winter and to shallow waters in the warmer months; they do not typically make north-south migrations (Morton 1989). They are abundant at a wide range of depths (3 to 120 feet) and in a variety of coastal habitats including nearshore waters off sandy beaches, SAV beds, and both shallow and deep offshore waters (Morton 1989). Substrate type and presence of vegetation are not major factors for bay anchovy distribution (Morton 1989). There is no commercial or recreational fishery for bay anchovy, but the species is one of the most abundant forage fish along the east coast and supports many predator species.

Spawning occurs between May and September both within estuaries and at the edge of the continental shelf when water temperatures are at least 54°F and salinities are over 10 ppt (Morton 1989). Eggs are pelagic and can be found throughout the water column, although they are more common near the surface. Larvae grow quickly and may reach maturity by late summer or early fall of the year they were spawned (SMS 2008). Larvae occur in the highest densities at salinities of 4.2 to 6.0 ppt and move upstream in the summer (June-August) to feed in low salinity waters rich in zooplankton (Morton 1989). By October, larvae have transformed into juveniles. Some juveniles move farther upstream into freshwater, while others remain in saline waters. Larger juveniles and adults migrate south and offshore as water temperatures drop in the fall, and overwinter along the inner continental shelf.

In the Hudson-Raritan Estuary, bay anchovy have been collected at water temperatures ranging from 36 to 81°F (Morton 1989). Across its range, bay anchovy have been found in waters ranging from fresh to hypersaline (80 ppt) (Morton 1989). Bay anchovy feed primarily on zooplankton and serve as the primary forage item for numerous piscivorous fishes; striped bass, bluefish, and weakfish, in particular, are significant consumers of bay anchovy (Wang and Houde 1995). Summer flounder also feed on bay anchovy. In the Chesapeake Bay, bay anchovy contribute from 60 to 90 percent to the diets of piscivorous fish on a seasonal basis (Wang and Houde 1995).

The shallow waters of the study area support all life stages of bay anchovy. Eggs and larvae may occur throughout the water column in Raritan Bay, most likely in the spring and summer. Juveniles and adults could occur in the study area year-round, but are likely less common in shallow waters during the colder months when they move offshore or to deeper areas of the Bay to overwinter. Bay anchovy was one of the more common species collected in site-specific sampling conducted in June and July of 2015, though they were less common during the same months in 2017. In 2015, 256 bay anchovy were collected (5.5% of the total catch), and in 2017 only 21 bay anchovy were found (0.36% of the total catch). During both years, bay anchovy represented the majority of the catch by otter trawls deployed in deeper offshore areas of Raritan Bay.

During in-water construction activities, temporary and localized increases in suspended sediment and loss of bottom habitat and benthic invertebrates would not result in significant adverse impacts to bay anchovy, as this species is not directly dependent on benthic habitats for food or refuge. While the breakwaters would replace open water with structured habitat, the structures would not hinder the movement of bay anchovy through the water column. The loss of sand/gravel substrate in the footprint of the breakwaters would not adversely affect bay anchovy since the species occurs in the water column. Additionally, the 11.4-acre footprint represents a very small portion of Raritan Bay, and similar habitat would continue to be available in the vicinity. Densities of zooplankton, which serve as food resources for bay anchovy, could congregate in the calmer waters on the lee side of the breakwaters and in the reef streets. As such, the breakwaters could provide additional foraging habitat for bay anchovy, potentially leading to a greater number of individuals in the study area. Bay anchovy are the primary forage fish resource for multiple piscivorous predator fish, and an increase in their population would lead to additional foraging opportunities for these upper trophic-level species.

BLUE CRAB (*Callinectes sapidus*)

Blue crab is a bottom dwelling species that is widely distributed from Nova Scotia to northern Argentina, but along the coasts of North America it is most abundant from Texas to Massachusetts. They occur in a variety of salinities ranging from ocean waters to tidal fresh waters of estuaries. The species utilizes a variety of substrates including mud flats, oyster bars, channel edges, and tidal marshes. As detritivores and scavengers, blue crabs feed on a variety of phytoplankton, invertebrates, fish, and other crabs. The blue crab stock is not depleted and overfishing is not occurring (CBSAC 2017).

Mating season occurs from May through October in the mid-Atlantic in the upper areas of estuaries and lower portions of rivers (Hill et al. 1989). Females generally spawn in high salinity waters between 2 and 9 months after mating (Hill et al. 1989). Eggs are deposited as a cohesive mass that remains attached to the female until larvae, called zoeae, emerge (Hill et al. 1989). Zoeae molt multiple times over the course of about 1 to 1.5 months, transforming into megalops, or the second larval stage, which is crablike in appearance; development into the juvenile “first crab” stage is characterized by adult proportions and appearance after 6 to 20 additional days (Hill et al. 1989). Areas of submerged aquatic vegetation in high salinity estuarine waters are used as nursery areas for both juveniles and molting crabs (Heck and Thoman 1984).

Juveniles gradually migrate into shallower, less saline waters of upper estuaries and rivers, where they grow and mature into adults through a series of molt and intermolt phases over the course of about 12 to 18 months (Hill et al. 1989). Blue crabs move from shallow areas and tributaries in the summer to deeper areas in the eastern part of Raritan Bay in the fall (Mackenzie 1990). When not mating, small blue crabs are found in shallow, high salinity waters over

substrates of soft detritus, mud, or mud and shell; larger crabs generally prefer deeper estuarine waters with hard bottom substrates (Hill et al. 1989). Female crabs remain in higher salinity waters, whereas the males remain in the upper portions of estuaries before migrating to deeper waters for the winter months.

Raritan Bay provides spawning, nursery, foraging, and overwintering habitat for blue crabs, which are commonly found on the bottom in the subtidal zone. Blue crab was the most common species of crab collected during site-specific sampling in June and July of both 2015 and 2017. It was also one of the more common species collected overall, including both crabs and fish. In 2015, blue crab represented 1.8% of the total catch, and in 2017 it represented 2.6% of the total catch.

During in-water construction activities, temporary and localized increases in suspended sediment and loss of bottom habitat would not result in significant adverse impacts to blue crab. The loss of sand/gravel substrate within the 11.4-acre footprint of the breakwater segments would be minimal compared to the amount of similar foraging habitat that would continue to be available in the study area. Additionally, the loss of this area would occur sequentially rather than all at once, and blue crab would be able to continue foraging in the area during construction. This species feeds on a variety of planktonic and benthic organisms, as well as detritus, and is found over both soft and hard substrates. The design of the breakwaters, including their complexity, porousness, and the presence of crevices and void space, would provide a suite of habitats for invertebrates and fish on which blue crabs could feed. Densities of plankton and detritus, which also serve as food resources for blue crabs, may increase in the calmer waters on the lee side of the breakwaters and in the reef streets. As such, the breakwaters could provide additional foraging habitat for juvenile and adult blue crab.

BLUE MUSSEL (*Mytilus edulis*)

Blue mussel is an epibenthic bivalve mollusk found in coastal areas of North America, Europe, and the Arctic. It is a valuable commercial species and is widely distributed and locally abundant in the north and mid-Atlantic regions. Blue mussels are well acclimated to a wide range of temperatures and can withstand freezing conditions for several months. This species attaches to hard surfaces in the water column or on the bottom and filter-feeds on phytoplankton and particulate detritus from the water (Rice 2010). There are currently no efforts in place to monitor blue mussel populations, so abundance is largely unknown. New York has established a recreational catch limit of 1/2 bushel, no commercial catch limit, and restricts gear to non-mechanical methods, with dredges allowed in some areas (NYSDEC 2017).

Adult mussels typically reach shell lengths of about 4 inches and attach to hard surfaces, including large boulders, pebbles, and other mussels (Rice 2010, Newell 1989). Spawning occurs around April, with a secondary spawning period in late August or September; occurrence of the secondary spawn depends on food availability and environmental conditions (e.g., water temperature, currents) (Zagata et al. 2008). Eggs are released into the water column for fertilization and hatch after about 5 hours (Newell 1989). Blue mussels go through several larval stages lasting between 15 days and 6 months after hatching. After about 6 months, the mussel temporarily attaches to filamentous substrates and develops as a juvenile for up to 2 years (Newell 1989).

Juveniles grow to approximately 1.5 mm while attached to filamentous algae, and then are carried by currents until they reattach to a hard substrate (Newell and Moran 1989). Following the juvenile stage, adults live in habitats ranging from flat intertidal shores to vertical surfaces

subject to wave splash (Newell 1989). They are typically found in subtidal and intertidal environments over a wide range of salinities (5 to 35 ppt) and depths ranging from 16 to 32 feet (Zagata et al. 2008). Blue mussels are found at water depths ranging from 5 to 10 meters (16 to 33 feet).

Blue mussels can occur in the deeper waters of Raritan Bay year-round. Very few blue mussels were observed in the study area during site-specific sampling, likely due to minimal availability of hard substrate off the Tottenville shoreline. Those that were found were located offshore from Butler Manor Woods, just east of the project location; none were found near the proposed location for the breakwater segments.

During in-water construction activities, temporary and localized increases in suspended sediment and loss of 11.4 acres of sand/gravel bottom habitat would not result in significant adverse impacts to blue mussels. The loss of this area, and associated increases in suspended sediment, would occur sequentially rather than all at once, which would minimize any potential far-field effects from construction. The design of the breakwaters, including the materials used, and the rugosity, height, length, width, and slope of the structures, is intended to recruit habitat-forming benthic invertebrates like blue mussels. Ecologically designed reef-like structures generally attract bivalves and mussels, and have been shown to support ecological communities of filter feeding invertebrates (Grabowski 2005, Luckenbach et al. 2005, Gregalis et al. 2008). Establishment of blue mussel communities would be encouraged through the use of bio-enhancing concrete units, multiple sizes and textures of hard substrate, and placement and orientation of the breakwaters in the study area so that tidal currents may transport phytoplankton and detritus on which mussels can feed. Juvenile mussels may be able to attach to algae that would develop on the breakwaters before they settle on hard substrate as adults. Blue mussels would be able to feed on detritus and phytoplankton that could increase in density in the calmer waters on the lee side of the breakwaters and in the reef streets. The expected development of mussel communities on the breakwaters would provide shelter and foraging opportunities for benthic invertebrates and fish in the study area.

BLUEBACK HERRING (*Alosa aestivalis*)

Blueback herring is a schooling pelagic species that ranges from Nova Scotia and New Brunswick south to the St. Johns River in Florida. Blueback herring adults spend much of their lives in salt water and return to freshwater tributaries to spawn over gravel and sand substrates (Loesch 1969). Adults and sub-adults follow a north to south seasonal migration along the Atlantic coast. Blueback herring and alewife often occur in the same vicinity. Recent trends in abundance indicate that river herring stock, which includes alewife and blueback herring, is depleted on a coastwide basis and near historic lows; “overfishing” status is not used for river herring because habitat loss, predation, and climate change also contribute to population trends for these species (ASMFC 2017a). Blueback herring have been designated as Species of Concern by NOAA due to declines in population over much of their range since the 1960s (NMFS 2017c).

Adults begin moving coastward to spawn in their natal rivers in response to changes in water temperature and light intensity (ASMFC 2015e). Spawning occurs in swift-flowing, deeper stretches of rivers over hard substrate, such as gravel or clean sand, and in slower-flowing tributaries and flooded areas with soft substrates (Pardue 1983). It generally takes place in freshwater habitats inland of the tidal influence and typically occurs over an extended period (ASMFC 2015e). In regions where blueback herring co-occur with alewife they select fast moving waters, but in regions where alewife are not present, blueback herring may select slower

flowing tributaries. Eggs adhere to vegetation, rocks, and debris in fresh water where they are deposited.

When hatched, larvae drift passively downstream. Substrates with 75% silt or other soft material containing detritus and vegetation have been suggested as optimal habitat for larval blueback herring (ASMFC 2015e). Herring remain in freshwater habitats as larvae and migrate to low salinity estuarine waters as juveniles, generally between June and November of their first year (Loesch 1969, Pardue 1983). Juvenile blueback herring have been found to use submerged aquatic vegetation bed habitats before migrating to ocean waters after 3 to 9 months. Throughout their offshore range, blueback herring are found at water depths of 27 to 55 meters (89 to 180 feet). Larval and juvenile blueback herring feed on small invertebrates, and adults feed on fish eggs, insects, crustacean eggs and larvae, and smaller fish. Adults feed on zooplankton, shrimps, and smaller fish. Blueback herring serve as prey for multiple EFH species including windowpane flounder, summer flounder, and juvenile bluefish

Blueback herring adults would likely only occur in Raritan Bay between April and June during migrations into freshwater spawning habitats and back into inland coastal waters post-spawn. Juveniles may also occur as transients as they migrate to the ocean. Eggs and larvae are associated with fresh or low salinity waters and would not occur in the study area in Raritan Bay. No blueback herring were collected during site-specific fish sampling in 2015 or 2017.

During in-water construction activities, temporary and localized increases in suspended sediment and loss of bottom habitat and benthic invertebrates would not result in significant adverse impacts to blueback herring, as this species is not directly dependent on benthic habitats for food or refuge. Sediment resuspension would be minimal and would dissipate following sediment disturbing activities, and would not affect blueback herring migration through the study area to or from riverine habitats. The loss of sand/gravel substrate in the footprint of the breakwaters would not adversely affect blueback herring since the species occurs in the water column, and only occurs in Raritan Bay as transients. Additionally, the 11.4-acre footprint represents a very small portion of Raritan Bay, and similar habitat would continue to be available in the vicinity. The complex hard surface of the breakwater segments would encourage establishment of encrusting organisms and macroalgae, which would attract small fish that may serve as prey for blueback herring. Densities of zooplankton, which also serve as prey for blueback herring, may increase in the calmer waters on the lee side of the breakwaters and in the reef streets. As such, the breakwaters could provide additional foraging habitat for juvenile and adult blueback herring during the spring and fall when they may occur in Raritan Bay as transients.

EASTERN OYSTER (*Crassostrea virginica*)

Eastern oyster is a sessile bivalve that lives in shallow, well-mixed estuaries and behind barrier islands along the east coast of North America from the Gulf of St. Lawrence south to Florida. In the Mid-Atlantic region, eastern oysters are most abundant in Long Island Sound, Delaware Bay, and Chesapeake Bay (Stanley and Sellers 1986). In shallow estuarine waters, preferred habitat includes mud flats, offshore bars, existing oyster reefs, and rocky bottoms in areas with moderate current velocity. Eastern oyster supports an important commercial fishery from the Gulf of St. Lawrence to the Gulf of Mexico. While oysters historically supported a large commercial fishery in New York, oyster stocks are severely declined in both distribution and abundance throughout the species' range, and most of the commercial harvest now comes from aquaculture (NYSDEC 2015).

Adult oysters are non-motile and typically live in clumps, or beds. In mid-Atlantic waters, they are found at water depths ranging from 2 to 16 feet (Mackenzie, Jr. 1996). Spawning occurs via release of eggs into the water, where they are fertilized; eggs and young larvae remain in the water column for 2 to 3 weeks (Stanley and Sellers 1986). Salinities above 7 ppt are required for spawning, and embryos develop normally at salinities between 16 and 30 ppt. Larvae can tolerate salinities between 3 and 31 ppt but tend to have better survival rates at salinities above 12 ppt (Stanley and Sellers 1986).

Juveniles, or spat, develop in the water column and attach to hard surfaces such as stones or other oyster shells, usually in established oyster beds, about 2 to 3 weeks after spawning. This species tolerates a wide range of salinity, generally between 5 and 32 ppt, but they prefer salinities higher than 20 ppt (Stanley and Sellers 1986). Sufficient water currents are necessary to flush suspended sediments, remove debris, and transport food over oyster beds. Oyster larvae feed largely on plankton, while adult oysters filter-feed on diatom plankton, dinoflagellates, ostracods, small eggs, and anything else in the water that is 3 to 4 micrometers in size, including bacteria (Stanley and Sellers 1986).

Considering their habitat requirements, oysters could occur in Raritan Bay year-round. None were found during site-specific sampling in 2015. Historically, oysters occurred throughout the New York Harbor, including Raritan Bay, but there are no known natural oyster beds currently present in Raritan Bay. The New York Harbor Foundation's Billion Oyster Project currently supports oyster restoration activities near Lemon Creek Park and at the piers near Great Kills, between about 1.5 and 6 miles east of the study area.

During in-water construction activities, temporary and localized increases in suspended sediment and loss of 11.4 acres of sand/gravel bottom habitat would not result in significant adverse impacts to eastern oysters, especially since there are no known oyster beds in the study area. The loss of this area, and associated increases in suspended sediment, would occur sequentially rather than all at once, which would minimize any potential far-field effects from construction. The design of the breakwaters, including the materials used, and the rugosity, height, length, width, and slope of the structures, is intended to recruit habitat-forming benthic invertebrates like eastern oysters. As described for blue mussel, ecologically designed reef-like structures can support communities of filter feeding invertebrates like oysters and other bivalves (Grabowski 2005, Luckenbach et al. 2005, Gregalis et al. 2008). Establishment of oyster communities would be encouraged through the use of bio-enhancing concrete units, multiple sizes and textures of hard substrate, and placement and orientation of the breakwaters in the study area so that tidal currents may transport phytoplankton and detritus on which oysters can feed. The expected accumulation of broken shells and other calcium carbonate materials around the breakwaters could provide additional substrate on which oysters could settle. Eastern oysters would be able to feed on detritus and plankton that could increase in density in the calmer waters in the reef streets and on the lee side of the breakwaters. The development of oyster communities on the breakwaters would provide shelter and foraging opportunities for benthic invertebrates and fish in the study area.

HORSESHOE CRAB (*Limulus polyphemus*)

Horseshoe crabs are bottom-dwelling arthropods that range from Maine to the Gulf of Mexico. They are most abundant from New Jersey to Virginia, especially around Delaware Bay. Adults exhibit offshore to nearshore migrations, occurring exclusively in subtidal waters of estuaries out to the continental shelf except during spawning. Little is known about the status of the horseshoe crab stock, but abundance has increased in the southeast (North Carolina through Florida) and

remains stable in the Delaware Bay region (New Jersey through coastal Virginia). The New York and New England regions continue to see a decrease in abundance (ASMFC 2013).

Adult horseshoe crabs migrate from deep offshore waters from March or April to July to spawn. Peak spawning activity occurs on new and full moon high tides in May and June; activity is consistently higher during a full moon and at night (ASMFC 2015f). During the spawning season, adults typically inhabit bay areas adjacent to spawning beaches, where they feed on bivalves. Preferred spawning habitat includes sandy beach areas within bays and coves that are protected from wave energy. Spawning habitat depends on ready access to these open sandy beaches in relatively calm waters, with a portion of the beach at or above MHW where eggs are laid and larvae develop (Bain et al. 2007). Beach quality, including slope, width, and sediment grain size, can influence spawning activity (Bain et al. 2007); beach slopes between 7° and 10° are thought to be optimal for horseshoe crab spawning habitat (USACE 2009).

Eggs are deposited on beaches in the upper portion of the intertidal zone and below the feeding zone of shorebirds (USACE 2009). Females make several nests during one beach trip and often return on successive tides to lay more eggs (MDNR 2016). After about one month, the eggs hatch and larvae remain in the intertidal flats or shoal waters where they were spawned until settling to the bottom to molt (USACE 2009, MDNR 2016). Migratory shorebirds rely on horseshoe crab eggs to survive their journey to breeding grounds (MDNR 2016). Horseshoe crab eggs and larvae are also a food source for a variety of species including crabs, whelks, striped bass, white perch, American eel, killifish, silver perch, weakfish, kingfish, silversides, summer flounder, and winter flounder (MDNR 2016).

During its first 2 to 3 years, the horseshoe crab molts several times per year, and then about once annually until it reaches sexual maturity around 9 to 11 years in age (MDNR 2016). Nursery habitat includes shoal waters and shallow areas of bays (ASMFC 2015f). Juveniles spend their first two years in nearshore waters, then move out of intertidal waters to subtidal waters a few miles offshore where they remain until the maturity process begins around 8 to 10 years (ASMFC 2015f). Adult horseshoe crabs remain in deep offshore habitats during most of the year, except during the spawning season, and occur over the continental shelf during the winter months. Adults occur exclusively in subtidal waters except during spawning periods. They feed mainly on marine worms and shellfish, and serve as an important food source to shorebirds and juvenile sea turtles.

Horseshoe crabs can occur in Raritan Bay year-round and are known to spawn along portions of the beach at Staten Island's southern shoreline, especially in Conference House Park. One horseshoe crab was collected in the study area during site specific sampling in June and July 2015, and 5 were collected in 2017. During a field survey in June 2017, the field crew observed spawning horseshoe crabs in Conference House Park near the mouth of the Arthur Kill, west of the study area; spawning pairs were also observed in the study area, but no farther east than Brighton Street (**Figure 26**). It is possible that the wider beach and gradual slope are more conducive to horseshoe crab spawning in this region compared to the study area, where the beach is narrower, more prone to erosion from wave action, and rockier in the intertidal zone in some locations (especially near the stormwater outfalls and closer to Page Avenue). Horseshoe crab eggs were also found in the study area in Conference House Park in both 2015 and 2017; in 2017, a large cluster of eggs was found at the westernmost sampling point in the park, near the intersection of Surf Avenue with the beach (**Figure 26**). Very few eggs were found east of Manhattan Street.

The Proposed Actions would comply with in-water work restrictions during the spawning season for winter flounder (early January through late May), which partially overlaps with the horseshoe crab spawning season. Construction of the Breakwaters Project, including the one-time shoreline restoration, would adhere to any additional timing restrictions implemented to protect spawning horseshoe crab (late May to early June). During in-water construction activities, temporary and localized increases in suspended sediment and loss of 11.4 acres of sand/gravel bottom habitat would not result in significant adverse impacts to horseshoe crabs. The loss of this area, and associated increases in suspended sediment, would occur sequentially rather than all at once, which would minimize any potential far-field effects from construction. Any horseshoe crabs present in the subtidal and intertidal zones between Manhattan and Loretto Streets during the one-time shoreline restoration would be able to move from the area of sand placement and avoid being covered, as the sand would be added to the beach in layers over a period of one to two months. The sand being used for the one-time shoreline restoration would match the sand substrate that exists near the high tide line in grain size, shape, and texture. The sand would cover the rocky/cobble substrate that currently exists near the low tide line, which has likely been exposed through erosion of finer sand that overlaid it at one time. This alteration of the beach between Manhattan and Loretto Streets would not result in significant adverse effects to horseshoe crabs. Although the shoreline restoration would initially result in a steep slope along this section of beach, the sand is expected to reposition itself over time and settle at a gradual slope. Compared to existing conditions, the more gradual slope and expanded beach width that would be achieved with the equilibrium condition may provide additional spawning habitat for horseshoe crabs, which are known to spawn just west of this section of beach (see **Figure 26**) in areas where the beach is wider and less prone to wave energy. The shoreline restoration and accretion potential of the breakwaters may improve horseshoe crab nesting habitat throughout the study area. The breakwaters themselves would provide additional foraging opportunities for horseshoe crabs through the establishment of invertebrate and shellfish populations, on which horseshoe crabs feed.

NORTHERN QUAHOG (*Mercenaria mercenaria*)

Northern quahog, also known as hard clam, ranges along the Atlantic and Gulf coasts from the Gulf of St. Lawrence to Texas; it is most abundant from Massachusetts to Virginia. They are a burrowing species found in the intertidal and subtidal zones of bays and estuaries in waters up to 15 meters deep, most often in higher salinity waters (Stanley and DeWitt 1983). They can be found in all sediment types, but are mainly associated with sediments that are a mixture of sand and mud with some coarse material. Hard clams are harvested for commercial and recreational use, and are the most extensively distributed commercial clam in the United States. In New York waters, hard clams have been declining in abundance since the 1980s, and even with management efforts in place, populations have not fully recovered; Raritan Bay has relatively high densities of hard clams, and the area is closed to harvest due to water quality (NYSDEC 2015).

Adult hard clams reach maturity at 2 to 3 years of age and shell lengths of 32 to 38 mm (1.2 to 1.5 inches) across their range, and continue to reproduce throughout their lives (Hill 2004). Adults can grow to 4 or more inches in length and may live as long as 40 years. The spawning season for hard clams extends from May through August; in Raritan Bay, the peak is likely sometime in late May or June (Stanley and DeWitt 1983). Spawning begins when water temperatures range from about 72°F to 86°F, peaking around 78°F. Eggs are released into the water column for fertilization and are carried by tidal and coastal currents for about 10 hours

before hatching. Eggs develop normally in salinities ranging from 20 to 32 ppt, and maximum larval growth occurs between 21 and 30 ppt (Hill 2004).

Larvae develop 12 to 14 hours after hatching and drift up and down through the water column until they reach about 2 to 3 mm in length. At this time, the shell begins thicken and larvae transform into seed clams, which begin a final migration to their ultimate habitat, settling as adults in their second summer (Stanley and DeWitt 1983). Juveniles and adults are more tolerant of lower salinity, but growth slows at salinities below 20 ppt (Hill 2004). Adults burrow an average of 2 centimeters into sand, and an average of just one centimeter into softer substrates; adults can escape 10 to 50 cm of overburden if buried and can re-burrow if removed from the substrate (Stanley and DeWitt 1983). If left undisturbed, they are generally sedentary (Hill 2004). Adult clams filter plankton and microorganisms from the water that are carried close to the bottom by currents. Larger clams have been observed in areas where currents are reduced and deposition of fine sediments and suspended materials is enhanced (Hill 2004). They serve as prey for a variety of federally managed species, including bluefish, skates, summer flounder, windowpane, winter flounder, and scup.

Hard clams can occur in the waters of Raritan Bay year-round and could be found in the study area. Few hard clams were observed in the study area during site-specific sampling in 2015. Those that were found were located less than a quarter mile offshore just east of Butler Manor Woods. Hard clams may be present in the area of one-time shoreline restoration; however, they are more likely to occur in portions of the Bay that have a mixture of sand and mud substrate, rather than the predominantly sandy bottom that occurs in the study area.

Any hard clams present in the shoreline restoration area between Manhattan and Loretto Streets would be covered by the placement of sand (12,341 CY below MHWS, of which 11,637 CY would be below MHW), which could be as deep as 2-3 feet in some places along this section of beach. Since hard clams have been found to dig out from under a maximum of 50 cm (19 inches) of overburden, a conservative assumption is that the Proposed Actions would result in the loss of any hard clams in the 2.7-acre footprint of shoreline restoration below MHWS (2.6 acres below MHW). The sand would be placed in layers over a period of one to two months, rather than being placed to its full depth at once, allowing clams to move up through the substrate between the placements of each sand layer. It is likely that some individuals would be able to escape the overburden, especially in areas of the beach where the depth of sand being placed is less. During in-water construction activities, temporary and localized increases in suspended sediment would not result in significant adverse impacts to hard clams, which are well adapted to fluctuations in sediment concentrations. Placement of the breakwater structures over 11.4 acres of sand/gravel bottom habitat would result in the loss of any hard clams within this footprint. This is a relatively small area compared to the amount of similar habitat in the area, and hard clams would continue to inhabit the sandy substrate surrounding the location of the breakwaters. The increased deposition of fine sediment and suspended materials on the landward side of the breakwaters, over areas of sand that may support hard clams, would result in increased food supply for the bivalves, which feed on suspended particulates (Anderson et al. 2004). Larval hard clams, in particular, have been found to selectively ingest algae that are suspended with inorganic particulates at low concentrations (Wilber and Clarke 2001). This life stage could benefit from the combined presence of algae that is expected to colonize the breakwaters and the suspended sediments that would exist in the water on the landward side of the structures. Hard clams are an estuarine species well-adapted to fluctuations in sedimentation and suspended sediment levels. In fact, larval growth only decreases at suspended sediment concentrations of 400 mg/L, well below what would be expected to occur around the breakwaters. The deposition

of fine material would be gradual, and hard clams would be able to adjust to changing substrate depths over time. This deposition would also provide a source of food for hard clams.

SOFT-SHELL CLAM (*Mya arenaria*)

Soft-shell clam is a filter feeding marine/estuarine bivalve that ranges from Labrador, Canada down to the east coast of Florida and are most abundant from Maine to the Chesapeake Bay. They are found in intertidal and subtidal zones at depths up to 200 meters (MDNR 2017). Preferred habitat includes sandy, sand-mud, or sandy clay bottoms of inlets and bays, typically at water depths of 3 to 4 meters (10 to 13 feet) and salinities no less than 4 to 5 ppt (Abraham and Dillon 1986). Soft-shell clam is an important commercial clam fishery along the east coast of the United States. There are currently no efforts in place to monitor soft-shell clam populations, so abundance is largely unknown. New York has established a recreational catch limit of 1/2 bushel, no commercial catch limit, and restricts gear to non-mechanical methods, with churning by propeller allowed below low tide (NYSDEC 2017).

Soft-shell clams reach maturity at 1.5 years or a shell length of about 40 mm (1.6 inches). They spawn biannually based on water temperatures, once in spring at 50°F to 68°F and once in fall when temperatures drop to 68°F. Eggs are broadcast into the water and develop into planktonic larvae about 12 hours after fertilization; after about 4 to 6 weeks, larvae settle to the bottom (Abraham and Dillon 1986). Survivorship is enhanced where there are shells, gravel, and other structures along the bottom, as this material provides refuge from predators.

Juveniles are able to move to more favorable locations, usually sandy bottoms with less than 50% silt content (Abraham and Dillon 1986). Juveniles only burrow into the substrate up to 2 cm, which exposes them to wave action. Juvenile soft-shell clams are often moved shoreward and concentrated at the break in the beach profile where the slope increases suddenly (Abraham and Dillon 1986). Adults burrow up to 30 cm into the substrate, with siphons extending to the sediment surface to feed on detritus and plankton suspended in the water (Abraham and Dillon 1986). Strong storms can displace soft-shell clams, but they generally do not move once they burrow into the substrate as adults (MDNR 2017). They feed on plankton and organic detritus filtered from the water.

Soft-shell clams can occur in Raritan Bay year-round and could be present in the study area. Few were observed in the study area during site-specific sampling in 2015. Those that were found were located less than a quarter mile offshore just east of Butler Manor Woods, at the same sampling site where hard clams were found. Soft-shell clams could occur in the sandy substrate of the one-time shoreline restoration area, but they are more likely to occur in deeper waters (10-13 feet) that would not be affected by the sand placement.

During in-water construction activities, temporary and localized increases in suspended sediment would not result in significant adverse impacts to soft-shell clams, which are well adapted to fluctuations in sediment concentrations. Any soft-shell clams present in the shoreline restoration area between Manhattan and Loretto Streets would be covered by the placement of sand (12,341 CY below MHWS, of which 11,637 CY would be below MHW), which could be as deep as 2-3 feet in some places along this section of beach. A conservative assumption is that the Proposed Actions would result in the loss of any soft-shell clams in the 2.7-acre footprint of shoreline restoration below MHWS (2.6 acres below MHW). However, the sand would be placed in layers over a period of one to two months, rather than being placed to its full depth at once, allowing clams to move up through the substrate between the placements of each sand layer. It is likely that some individuals would be able to escape the overburden, especially in areas of the beach

where the depth of sand being placed is less. Placement of the breakwater structures over 11.4 acres of sand/gravel bottom habitat would result in the loss of any soft-shell clams within this footprint. This is a relatively small area compared to the amount of similar habitat in the area, and soft-shell clams would continue to inhabit the sandy substrate surrounding the location of the breakwaters. Larval soft-shell clams, which are planktonic for up to 6 weeks, could settle in sediments on the lee side of the breakwaters and in the reef streets, where wave energy would be reduced by the structures. The halo of crushed shells and other materials that would accumulate around the edges of the breakwaters would provide refuge from predators in these areas, potentially enhancing survival of larvae. Increased deposition of fine sediment and suspended materials on the landward side of the breakwaters, over areas of sand that may support soft-shell clams, would result in increased food supply for the bivalves, which feed on suspended detritus and plankton. The deposition of fine material where soft-shell clams may settle would be gradual, and individuals would be able to adjust to changing substrate depths over time.

SPOT (*Leiostomus xanthurus*)

Spot is a pelagic fish that inhabits estuarine and coastal waters ranging from the Gulf of Maine to Mexico. They migrate seasonally between estuarine and coastal waters, entering bays and sounds during the spring and moving offshore to spawning grounds in the late summer or fall (ASMFC 2010b). Spot also make north-south migrations, spending warm months in the northern portion of their range and colder months in the southern portion. Adults can be found at depths up to 673 feet (205 meters). Spot are largely demersal and feed on benthic macrophytes (ASMFC 2015g). The species is not overfished, and overfishing is not occurring (NMFS 2017b).

Spot typically spawn offshore in the relatively deep waters of the outer continental shelf, although some may spawn in nearshore waters and estuaries, and may spawn repeatedly over several weeks (ASMFC 2012a). Spawning occurs during late fall to early spring when water temperatures range from 63.5 to 77°F. Eggs are pelagic and buoyant, and when they hatch, larvae are transported by currents into low salinity tidal creeks. Spot larvae have been collected from estuarine waters out to the edge of the continental shelf; they tend to be smaller and more numerous offshore in depths ranging from 112 to 420 feet (34 to 128 meters) compared to inshore in depths of 56 to 85 feet (17 to 26 meters) (ASMFC 2010b). Larvae move with the wind and currents from offshore spawning areas to estuarine nursery habitats in winter and early spring, and settle into upper regions of estuaries where they feed on planktonic copepods and ostracods (ASMFC 2012a). Primary nursery habitat includes low salinity bays and tidal marsh creeks with mud and detrital bottoms (ASMFC 2015g). YOY spot remain in the nursery habitat for the duration of warm months, and emigrate to deeper estuarine or marine waters as water temperatures drop in the fall (ASMFC 2010b).

Juveniles are abundant in estuarine habitats, but densities are typically higher in estuarine creeks and marshes compared to seagrass meadows or open water habitats (ASMFC 2010b). Juveniles are most often found in water depths shallower than 26 feet (8 meters) over fine sediments and in tidal marshes where salinities range from 0 to 30 ppt and in water temperatures from 43 to 68°F (ASMFC 2012a). Juvenile spot are found over mud and sand substrates, where they feed on bottom dwelling worms and crustaceans, but have also been collected over shell, sponge, and peat substrates (ASMFC 2012a). As they grow, juveniles move into deeper waters with higher salinities (ASMFC 2015g). Bottom-oriented adult spot are more abundant in coastal waters and lower estuaries where salinities are higher, over sandy or muddy bottoms in waters up to 197 feet (60 meters) deep. They feed mainly on epifaunal and infaunal benthic invertebrates and serve as prey for nearshore predatory fishes, such as flounder (ASMFC 2012a).

The shallow waters of the study area provide foraging and nursery habitat for spot. Spot eggs and larvae may occur in Raritan Bay between late fall and early spring as they are carried by currents from the continental shelf to estuarine waters. Juveniles and adults are associated with mud and sand substrates in shallow brackish waters, and both could occur in the study area year-round. Only one spot was collected during site-specific sampling in July 2015; none were collected in 2017.

During in-water construction activities, temporary and localized increases in suspended sediment and loss of bottom habitat would not result in significant adverse impacts to spot. The loss of benthic macroinvertebrates within the 11.4-acre footprint of the breakwater segments would be minimal compared to the amount of similar foraging habitat that would continue to be available in the study area. Additionally, the loss of this area would occur sequentially rather than all at once, and spot would be able to continue foraging for bottom-dwelling worms and crustaceans in the area during construction. It is expected that worms encrusting organisms would establish populations on and among the breakwaters, providing food resources for juveniles and adults. Densities of planktonic organisms, which serve as food resources for larval spot, may increase in the calmer waters on the lee side of the breakwaters and in the reef streets. As such, the breakwaters could provide additional foraging habitat for spot after construction is complete.

STRIPED BASS (*Morone saxatilis*)

Striped bass is a recreationally and commercially important species. It is an anadromous fish that occurs along the Atlantic coast from Canada to northern Florida, but is most common from Cape Cod to Cape Hatteras. The Hudson River supports one of several principal spawning populations, which also include Delaware Bay, Chesapeake Bay, the Roanoke and Chowan rivers and Albemarle Sound in North Carolina, the Santee River in South Carolina, and the St. Johns River in northern Florida. Some striped bass return to their natal rivers to overwinter, while others overwinter in other estuaries or in the warmer coastal waters from New Jersey to North Carolina. A number of east coast states, including New York, placed restrictions on commercial and recreational fishing for striped bass in the 1980s due to reduced population size. Since that time, the Atlantic stock of striped bass has rebounded. The striped bass stock is not currently overfished, and overfishing is not occurring (ASMFC 2016c).

In the Hudson River, spawning occurs at or near the surface of freshwater regions between West Point and Kingston, NY (RM 44-56) from April to mid-June (NYSDOS 1992, Heimbuch et al. 1994). Peak spawning typically occurs at water temperatures of 60°F to 65°F where currents are moderate to swift. Eggs are semi-buoyant and are typically found in the greatest concentration in the Hudson River between mid-May and early June (NYSDOS 1992). Spawning does not occur in the brackish waters of the Hudson River or in Raritan Bay.

Post yolk-sac larvae metamorphose to juveniles in 23 to 68 days. Male juveniles range from 25 to 300 mm (1.0 to 11.8 inches) and females range from 25 to 500 mm (1.0 to 19.7 inches) (Fay et al. 1989). Schools of juveniles move down the estuary along the shores during the summer, feeding on crustaceans and insect larvae at or near the bottom (Heimbuch et al. 1994). Juveniles remain near shore until November or December when they move to deeper waters. A significant proportion of juvenile striped bass remain within the lower Hudson Estuary until age two or three, when some individuals move out of the estuary along with post-spawn adults to begin coastal migrations. Although most migrate to sea, some striped bass adults, which can grow in excess of 45 inches, remain in the Hudson River and connected waterbodies year-round. In the fall and winter, these resident adults are joined by migratory adults returning to the estuary to

spawn. They remain in the lower portion of the estuary until the upriver spawning migration begins in the spring.

Striped bass can be found over a variety of substrates. Young and juvenile striped bass are generally found over clean, sandy substrate in shallow, low salinity (up to 16 ppt) waters; juveniles have also been found over gravel or a mixture of mud, sand, gravel, and rock (ASMFC 2015h). Adults occur over a wide variety of substrates, including rock and boulders, gravel, sand, vegetation, and mussel beds (ASMFC 2015h). Young striped bass feed on invertebrates including decapods, amphipods, and mysids; adults are primarily piscivorous.

Neither eggs nor larvae are found in Raritan Bay, as spawning and initial development occurs in fresh water. Striped bass juveniles and adults can occur in the study area in Raritan Bay year-round. Adults would most likely be present during spawning migrations when striped bass move from offshore waters into the Hudson River, or as they leave the river in the fall and winter. Nine striped bass were collected during site-specific fish sampling in June and July 2015, and 4 were collected in 2017.

During in-water construction activities, temporary and localized increases in suspended sediment and loss of bottom habitat and benthic invertebrates would not result in significant adverse impacts to striped bass, as this species is not solely dependent on benthic habitats for food or refuge. While the breakwaters would replace open water with structured habitat, the structures would not hinder the movement of striped bass through the water column. The loss of benthic macroinvertebrates within the 11.4-acre footprint of the breakwater segments would be minimal compared to the amount of similar habitat that would continue to be available in the study area. Additionally, the loss of this area would occur sequentially rather than all at once, and striped bass would be able to continue foraging in the area during construction. Foraging habitat for piscivorous adult striped bass in the water column would not likely be affected during construction. It is expected that encrusting organisms and the small fish that feed on them would establish populations on and among the breakwaters. These forage fish would serve as prey for striped bass, enhancing the foraging habitat for this species. In Raritan Bay, striped bass is one of the most commonly targeted species for recreational fishing trips. Between 2012 and 2016, 52 striped bass were caught by recreational fishing boats in Raritan Bay; about 46% were landed and the rest were released (NMFS 2017a). The average length of landed fish was 33.8 inches TL, which is within the length range for adult striped bass (NMFS 2017a). Given that the breakwaters would provide additional foraging habitat for striped bass in Raritan Bay, recreational fishing pressure on striped bass could increase. The additional foraging habitat provided by the breakwaters could lead to higher survival of smaller fish, which are not within the length range of those that are landed. The potential increase in landings of adult striped bass through recreational fishing would not be expected to deplete the striped bass stock in the study area, as Raritan Bay represents a very small area across the range of the population, and more than half of striped bass caught in the area are released back to the Bay.

WEAKFISH (*Cynoscion regalis*)

Weakfish is a pelagic fish that occurs along the Atlantic coast from Nova Scotia to southeastern Florida, most commonly from New York to North Carolina. Adults make north/south and onshore/offshore migrations seasonally across their range. Weakfish move inshore and northward in the spring to bays, estuaries, and sounds, and move offshore and southward as temperatures decline in the fall. While inhabiting estuaries in the warmer months, individuals tend to establish relatively small areas of localized movement (ASMFC 2016d). Weakfish was historically an important recreational and commercial species, but the stock has been depleted in

recent years (ASMFC 2012b). The stock currently remains depleted, but overfishing is not occurring (ASMFC 2016e).

Spawning occurs from May to mid-July in the nearshore and estuarine areas of the coast after the spring inshore migration. Two spawning peaks occur in the New York Bight estuaries, one in mid-May and the other in June (Mercer 1989). Females continuously produce eggs during the season and release them in batches over time (ASMFC 2012b). Eggs are pelagic and buoyant, and may be carried to other nearshore waters by currents. Larvae remain in the deeper portions of nearshore waters where they are spawned or where they are transported by currents prior to hatching. Larvae feed on microscopic organisms in nursery habitats (ASMFC 2012b).

By October to December of their first year, larvae have transformed into juveniles and begin migrating to the coast (ASMFC 2012b). Juvenile weakfish commonly use estuarine waters as nursery grounds, largely remaining in waters of moderate depth, slightly higher salinity, and over sand and/or seagrass substrates (Mercer 1989). Throughout the summer, larger juveniles continuously leave estuarine waters and move to the inner continental shelf (ASMFC 2016d). Juveniles and adults migrate southward and offshore in waves as water temperatures drop in the fall (ASMFC 2016d). Adult weakfish inhabit both estuarine and nearshore ocean habitats year-round, depending on water temperatures. Preferred temperature appears to range from 63 to 82°F for juveniles and adults (Mercer 1989). Weakfish are important top carnivores, feeding on shrimps, anchovies, and clupeid fishes along edge habitats (i.e., seagrass beds, channel edges, rock, and oyster reefs).

Estuaries along the Atlantic coast, including the Hudson-Raritan estuary, serve as spawning, foraging, and nursery habitat for weakfish, and all life stages could occur in the study area. Eggs and larvae may occur in Raritan Bay in the spring and summer. While juveniles and adults may migrate offshore in the fall, some would likely remain in Raritan Bay. Thirty-five weakfish were collected during site-specific fish sampling efforts in the study area in June and July 2015 (<1% of the total catch), and none were caught in 2017.

During in-water construction activities, temporary and localized increases in suspended sediment and loss of bottom habitat and benthic invertebrates would not result in significant adverse impacts to weakfish, as this species is not solely dependent on benthic habitats for food or refuge. Adults and juveniles are mainly piscivorous, but also feed on macroinvertebrates. While the breakwaters would replace open water with structured habitat, the structures would not hinder the movement of weakfish through the water column. The loss of benthic macroinvertebrates, potentially including shrimp unable to move from the construction area, within the 11.4-acre footprint of the breakwater segments would be minimal compared to the amount of similar habitat that would continue to be available in the study area. Additionally, the loss of this area would occur sequentially rather than all at once, and weakfish would be able to continue foraging in the area during construction. Foraging for weakfish in the water column would not likely be affected during construction. It is expected that encrusting organisms and the small fish that feed on them would establish populations on and among the breakwaters. These forage fish would serve as prey for weakfish, enhancing the available foraging habitat for this species. In Raritan Bay, weakfish is rarely targeted for recreational fishing trips. Between 2012 and 2016, only one weakfish was caught by a recreational fishing boat, and none were landed (NMFS 2017a). Given the potential for increased foraging habitat among the breakwater structures, more weakfish could occur in the study area and could be caught if targeted by recreational fishing trips. The additional foraging habitat provided by the breakwaters could lead to higher survival of juveniles in the area, which would help to minimize the impact from any

increase in landings through recreational fishing. Additionally, Raritan Bay represents only a small portion of the species' range, and additional landings would not result in significant adverse impacts to the population.

FORAGE SPECIES

MUMMICHOG AND STRIPED KILLIFISH

Mummichog (*Fundulus heteroclitus*) and striped killifish (*Fundulus majalis*) are important pollution-tolerant forage species that occur in the tidal tributaries and open waters of Raritan Bay. Both species are common from Newfoundland to the coast of northern Florida, and serve as prey for YOY, juvenile, and adult piscivorous estuarine species, including bluefish and American eel (Able and Fahay 2010).

Mummichog is a small pelagic species that occurs in a variety of marsh habitats to open shores, as well as many altered habitats where few other fish can survive (Collette and Klein-MacPhee 2002). They are opportunistic feeders, preying on small crustaceans, annelids, and gastropods. They may also feed on detritus. Spawning occurs between April and July in the intertidal zone of estuaries and tidal creeks. Eggs are demersal and are deposited on the substrate in small interstices (Collette and Klein-MacPhee 2002). Recently hatched larvae have a wide salinity tolerance, and many YOY remain in marsh pools during their first summer. Juveniles and adults occur in a variety of shallow habitats from marsh pools to open shorelines over substrate ranging from sand to silt (Able and Fahay 2010). Mummichog tend to remain in salt marshes or tidal creeks during the summer, but may move greater distances during the winter. Movements are largely driven by tides, with juveniles and adults moving up creeks and onto the marsh surface during high tide, and back to the tidal creek channel during low tide (Collette and Klein-MacPhee 2002).

Striped killifish is a small pelagic species that occurs along the coast from New Hampshire to the Gulf of Mexico. They can be found in a variety of shallow habitats including open beaches, coves and bays, and along subtidal shorelines, especially at higher salinities (Collette and Klein-MacPhee 2002). They have not been found in waters deeper than 26 feet (8 meters) (Able and Fahay 2010). Killifish are often found over sandy substrates, in which they can bury themselves completely. They are generally more carnivorous and less opportunistic than mummichog, feeding on mollusks, crustaceans, fishes, and insects. Spawning occurs from late May to July in nearshore shallow water and in intertidal pools (Able and Fahay 2010). Eggs are buried in the substrate and hatch after about three weeks. Larvae typically occur in shallow intertidal pools over sandy substrate, and YOY are found more widely along estuarine shores (Able and Fahay 2010). Juveniles and adults can be found in salinities ranging from 1 to 37 ppt, but are most abundant in more saline waters. Seasonal migration patterns within the estuary or in adjacent coastal ocean habitats are currently unknown (Able and Fahay 2010).

The shallow waters of the study area support both mummichog and killifish year-round. Eggs and larvae may occur in the intertidal zone and in shallow shoreline habitats during the spring and summer, and juveniles and adults could be found at any time of year. Striped killifish was the third-most commonly collected species during site-specific sampling in July 2015 (514 individuals, 11.1% of the total catch), but only 6 individuals were collected in 2017. Mummichog was somewhat commonly collected in both June and July of 2015 (84 individuals, 1.8% of the total catch), and only 9 individuals were collected in 2017. All mummichog and striped killifish found in the study area were collected in beach seine nets deployed along the shoreline; none were caught farther offshore with otter trawls or fish traps.

During in-water construction activities, temporary and localized increases in suspended sediment and loss of bottom habitat and benthic invertebrates would not result in significant adverse impacts to mummichog or striped killifish, as these species are not directly dependent on benthic habitats. The temporary loss of shallow habitat in the intertidal zone during one-time shoreline restoration would result in temporary avoidance of the area by mummichog and killifish, but similar habitat would continue to be available in the area and these species could utilize this section of beach following construction. The loss of sand/gravel substrate in the footprint of the breakwaters would not adversely affect either species since they both occur in the water column. Additionally, the 11.4-acre footprint represents a very small portion of Raritan Bay, and similar habitat would continue to be available in the vicinity. The complex hard surface of the breakwater segments would encourage establishment of encrusting organisms and macroalgae, on which mummichog and striped killifish could feed. As such, the breakwaters would provide additional foraging habitat for both species in the open waters of the Bay, potentially leading to a greater number of individuals in the study area. Mummichog and killifish are important forage resources for multiple piscivorous fish, and an increase in their populations would lead to additional foraging opportunities for these upper trophic-level species.

ATLANTIC AND INLAND SILVERSIDE

Atlantic silverside (*Menidia menidia*) and inland silverside (*Menidia beryllina*) are important forage species that occur in the tidal tributaries and open waters of Raritan Bay. Both are common from the Gulf of St. Lawrence south to Florida and Mexico. Silversides serve as prey for adults and juveniles of many commercial or recreationally important species such as striped bass, bluefish, and blue crab (Collette and Klein-MacPhee 2002).

Atlantic silversides are small pelagic fish that congregate in large schools over sand, gravel, mud, or peat bottoms. They are common inhabitants of intertidal creeks, marshes, and surf zones of estuarine embayments, like Raritan Bay. Atlantic silversides are omnivorous, feeding on a variety of things including algae and diatoms, insects, molluscan larvae, worms, and shrimp. Spawning occurs between April and July in the intertidal areas of estuarine waters, including tidal creeks, optimally at salinities around 30 ppt (Able and Fahay 2010, Collette and Klein-MacPhee 2002). Eggs are submerseal and adhesive, and hatch after 4 to 27 days, depending on water temperature (Collette and Klein-MacPhee 2002). Larvae remain near the waters where they were spawned until mid- to late summer. YOY move into deeper estuarine waters in early August, and many leave the estuary in late summer and early fall into offshore and ocean habitats for the winter (Able and Fahay 2010). Juveniles and adults are abundant in estuarine waters through the summer and fall, and are more common over the inner continental shelf in the winter months.

Inland silversides are slightly larger than Atlantic silversides and prefer less saline conditions (Collette and Klein-MacPhee 2002). They form large schools in the upper portion of estuaries and can be found over a wide variety of substrates. Inland silversides feed on macroinvertebrates, mollusks, worms, larval fish, fish eggs, insects, zooplankton, algae, and detritus. Adults feed mainly on small crustaceans, mollusks, insects, and worms (Able and Fahay 2010). Spawning occurs between May and August in the shallow waters of the intertidal zone of upper estuaries (Able and Fahay 2010, Collette and Klein-MacPhee 2002). Eggs attach to vegetation, detritus, roots, or leaves, and hatch after 10 to 14 days, depending on water temperatures. Hatching is successful at salinities up to 30 ppt, but larvae are found at salinities around 15 ppt. YOY move to deeper estuarine waters during late fall and winter, and return in the spring. Juveniles and adults inhabit shallow estuarine and freshwater marshes through the

spring and summer, particularly in tidal channels in the vicinity of submerged vegetation, and move into deeper waters during the fall (Able and Fahay 2010). Adults may also occur in shallow coastal ocean waters.

The shallow waters of the study area support both species of silverside year-round. Eggs and larvae may occur in the intertidal zone during the spring and summer. Juveniles and adults would likely be found from spring through fall, and would be less common during the winter when they move to deeper waters or offshore. Inland silverside was not found in site-specific sampling either in 2015 or 2017, but Atlantic silverside was the most common species collected in both years. In 2015, Atlantic silverside represented 39% of the total catch, and in 2017 it represented 44% of the total catch. All Atlantic silverside found in the study area were collected in beach seine nets deployed along the shoreline; none were caught farther offshore with otter trawls or fish traps.

During in-water construction activities, temporary and localized increases in suspended sediment and loss of bottom habitat and benthic invertebrates would not result in significant adverse impacts to silversides, as these species are not directly dependent on benthic habitats for food or refuge. The temporary loss of shallow habitat in the intertidal zone during one-time shoreline restoration would result in temporary avoidance of the area by silversides, but similar habitat would continue to be available in the area and silversides could utilize this section of beach following construction. While the breakwaters would replace open water with structured habitat, the structures would not hinder the movement of silversides through the water column. The loss of sand/gravel substrate in the footprint of the breakwaters would not adversely affect silversides since the species occurs in the water column. Additionally, the 11.4-acre footprint represents a very small portion of Raritan Bay, and similar habitat would continue to be available in the vicinity. The complex hard surface of the breakwater segments would encourage establishment of encrusting organisms and macroalgae, on which silversides could feed. As such, the breakwaters would provide additional foraging habitat for silversides during the warmer months when they occur in Raritan Bay, potentially leading to a greater number of individuals in the study area. Silversides are an important foraging resource for multiple piscivorous fish, and an increase in their population would lead to additional foraging opportunities for these upper trophic-level species.

H. SUMMARY OF EFFECTS ON EFH AND DESIGNATED SPECIES

DIRECT IMPACTS

Direct impacts to EFH and designated species are summarized below.

- Permanent loss of approximately 11.4 acres of benthic habitat and associated benthic invertebrates within the footprint of the breakwaters, and the conversion from soft-bottom to high-relief hard structured habitat in this footprint. The breakwater structures would provide high-relief reef-like habitat in the subtidal and intertidal zones, on which encrusting organisms and macroalgae are expected to establish, especially with the incorporation of bio-enhancing concrete units. The period following construction of a particular breakwater segment during which the sand and gravel habitat within the footprint of the breakwater segment would be lost and that breakwater would provide shelter but not forage habitat would be expected to be limited to a few months. Additionally, the sequential construction of the breakwaters would allow colonization to begin at the first completed segments while the rest are being constructed, minimizing the period during which sand and gravel foraging habitat would be lost and prey species would not be available on any of the structures.

Foraging opportunities would also continue to be available in the surrounding soft-bottom habitat during this time. Therefore, temporal loss of foraging habitat would not result in significant adverse impacts to macroinvertebrates and fish within Raritan Bay. The habitat conversion and establishment of a benthic community would provide foraging opportunities for small forage species and structure-oriented species, which would in turn provide foraging opportunities for higher trophic-level predators. Sandy substrate would continue to be available in the waters surrounding the breakwaters, and would continue to provide foraging opportunities for species that occur over sand.

- Permanent loss of open water habitat within the volume occupied by the breakwater structures. The reef-like breakwater structures would occupy approximately 115,990 CY in Raritan Bay below MHW, which would constitute an equivalent conversion of open water habitat to hard structure (a habitat that was historically present but currently scarce in Raritan Bay).
- Permanent loss of approximately 3.6 acres of Waters of the U.S. and associated habitat that would no longer be available to aquatic organisms due to the portion of the breakwater structures above MHW. This loss would result in adverse impacts to aquatic resources and would be mitigated pursuant to the Clean Water Act through measures that may include available credits from an approved mitigation bank, and restoration/enhancement of Waters of the U.S. within the Raritan Bay watershed in New York.
- Loss of approximately 2.7 acres of benthic habitat and associated benthic invertebrates within the footprint of the one-time shoreline restoration below MHWS, of which 2.6 acres would be below MHW. Infaunal organisms (e.g., hard clams, soft-shell clams) would likely re-adjust to the substrate depth as sand is added in layers. Once the shoreline restoration is complete, additional benthic organisms would recolonize the area, and horseshoe crabs may use the wider beach for spawning.
- Permanent impacts to 0.14 acres of the 0.8-acre delineated wetland due to a portion of the hybrid dune/revetment and a length of eco-revetment, primarily within the section of the wetland dominated by *Phragmites*. Removal of an existing sand bridge and culvert comprising 0.01 acres of unpermitted fill would result in a net change in fill within the wetland of 0.13 acres. The removal of the unpermitted fill would remove an existing impediment to tidal exchange within the eastern portion of this wetland. Enhancement of the tidal wetland plant community resulting from the increased tidal exchange at the inlet with Raritan Bay, removal of *Phragmites*, and planting of native salt marsh vegetation, including any seeds and individual plants preserved during construction, would offset the loss of a portion of this wetland.
- Sediment resuspension during one-time shoreline restoration and placement of the breakwater materials. The increase in suspended sediment would be temporary and localized, would not adversely affect migration through this portion of Raritan Bay, and would not result in significant adverse impacts to designated species.
- Shading of EFH from the seasonal boat launch associated with the Water Hub (Potential Locations 1 and 2) or from the floating Water Hub. Either seasonal boat launch would be narrow enough (less than 15 feet) to allow light to penetrate to the aquatic habitat beneath over the course of a day, and would not result in significant adverse impact to EFH or designated species. Floating structures are expected to only minimally influence fish utilization of nearshore habitats in the New York Harbor, and may in fact provide shelter for fish when it is the only shade source, especially during migratory periods when more fish are

present in the area (PANYNJ 2015). Since the shoreline is relatively unshaded in this region off the south shore of Staten Island, fish may utilize the shaded area beneath the floating boat launch for shelter during the day.

INDIRECT IMPACTS

Indirect impacts to EFH and designated species are summarized below.

- The conversion of habitat and provision of additional foraging opportunities within and among the breakwater structures would lead to greater utilization of the study area for foraging by a number of species (e.g., black sea bass, summer flounder, bluefish, etc.). An increase in the presence of these species may result in an increase in the numbers of individuals caught via recreational fishing in the Bay. The additional structured foraging habitat provided by the breakwaters would lead to higher survival of juveniles, which are not within the length range of fish that are landed through recreational fishing. With higher survival of juveniles, the added fishing pressure would not be expected to deplete the stock of any species in the study area.
- Along the edges of the breakwaters and in the reef streets, there is the potential for accumulation of broken shells and other calcium carbonate materials originating from sessile and encrusting organisms that colonize the breakwater structures. Since the accumulation of these materials would occur gradually over a long period of time, infaunal invertebrates would be able to adjust to changing substrate depths, and foraging habitat for EFH and designated species would not be adversely impacted. The halo of calcium carbonate materials would provide additional habitat for cryptic species, which would make the lower parts of the structures available to colonization by organisms that are less tolerant of high sedimentation loads (e.g., bryozoans and tube worms).
- One-time shoreline restoration and long-term accretion in this section of the shoreline between Manhattan and Loretto Streets would result in the loss of shallow water habitat below MHW at equilibrium conditions. After placement and over a period of years, the sand would gradually spread out and move down the beach towards the water, ultimately resulting in a larger intertidal zone and wider beach at this location. Limited lateral redistribution of this sand along the shoreline would be anticipated due to the breakwaters.
- Accretion encouraged by the breakwaters and enhanced by the addition of sediment to the system through one-time shoreline restoration would occur gradually over a period of years to decades, allowing aquatic biota in the intertidal zone to adjust to slowly changing depths and beach slopes near the shoreline. The loss of shallow water habitat due to accretion over time would represent a small portion of the study area within Raritan Bay, and similar habitat at equivalent water depths would continue to be available in the vicinity.
- Over the long-term, the Breakwaters Project would stabilize shoreline change in the project area, reduce erosion, and augment the potential for accretion along the south shore of Staten Island. As a function of their potential to attenuate waves, the breakwaters would also result in increased deposition of sediment and suspended material at the shoreline landward of the structures. The shoreline change would eventually reach an equilibrium, at which point the rate of shoreline change would decrease or remain the same; thus, growth of the shoreline would not continue indefinitely. While local sediment transport rates and accretion would be altered, the natural processes would not be blocked as there would still be sediment transport along the shore and tidal circulation around the breakwaters.

- The Breakwaters Project would have negligible, if any, impact on large scale water circulation and flushing in Raritan Bay. According to DELFT 3D modeling results, the breakwaters would have a negligible effect on residence times in the project area. There would be a continuous circulation of water around the breakwaters, allowing tidal exchange on either side of the structures. However, Flow3D modeling indicates that there would be small-scale changes in water circulation in the immediate vicinity of the breakwater segments, with some scour and deposition in the immediate vicinity of the breakwater segments that would be reversed between flood and ebb conditions for most areas. As water would be exchanged continuously during all tidal conditions, this would not have a significant adverse impact on EFH or designated species.

CUMULATIVE IMPACTS

In a regional context, the highly urbanized character of the New York Harbor Estuary, including Raritan Bay, historically has affected aquatic resources through pollution, habitat loss, and other anthropogenic influences. Despite historic impacts, however, there is evidence that the aquatic resources around the estuary have been improving in recent years, owing to such actions as the implementation of widespread water pollution control measures, improvements to fishery harvest management practices, and generally improved environmental awareness since the 1960s. The results of the NYCDEP Harbor Surveys demonstrate that the water quality of the estuary has improved significantly since the 1970s as a result of measures undertaken by the city. These improvements in water quality, and thus, EFH, are expected to continue in the future due to continued efforts by the city (e.g., control of combined sewer overflows).

Additionally, improvements in aquatic habitat and EFH would result from a number of present and reasonably foreseeable future actions near the study area, including the following:

- NYC Parks projects within Conference House Park, including invasive plant removal and maritime forest restoration, and possible wetland restoration and coastal grassland and wet meadow creation.
- Hudson-Raritan Estuary Comprehensive Restoration Plan (HRE-CRP) —Completed in 2009 by USACE in partnership with the Port Authority of New York & New Jersey and the New York-New Jersey Harbor Estuary Program, it aims to achieve eleven "Target Ecosystem Characteristics" of a successfully restored and healthy estuary. The HRE-CRP identified 296 sites for potential acquisition and/or restoration, and set measurable objective for 2015 and 2050. Several of these sites are within or along Raritan Bay, and ongoing or planned HRE-CRP projects at these sites were evaluated for their potential to benefit natural resources within the study area and the bay as a whole.
    - HRE-CRP sites that are closest to the proposed Breakwaters and Shoreline Projects and would provide direct or indirect benefits to the overall aquatic resources of the area include Mt. Loretto Unique Area, Butler Manor Woods, Paw-Paw Hybrid Oaks Coastal Woods, and Lemon Creek in Staten Island, and Treasure Lake, Whale Creek/Long Neck Creek, and Marquis Creek in New Jersey. HRE-CRP projects at these sites typically include one or more of the following activities: coastal and upland land acquisition and protection, coastal habitat restoration, restoration of tidal connections of tributaries, restoration and protection of riparian and upland areas around the bay's tributaries, debris removal, and/or contaminated sediment removal. The HRE-CRP also recommdnds oyster reef restoration off the Great Kills Park peninsula's shoreline in Staten Island, a few miles northeast from the study area.

- City-wide initiatives, including Vision 2020, New York City's Green Infrastructure Plan, PlaNYC, OneNYC, and MillionTreesNYC—Focal areas of these plans include expanded usage of green infrastructure throughout the city, reduced pollution from stormwater runoff, improved flushing of constrained water bodies, and optimization of existing sewer systems through improvements to drainage, interceptors, and tide gates. Another initiative of PlaNYC and Vision 2020 is to increase public access to the city's waterfronts, including in the Tottenville section of Staten Island. The PlaNYC Special Initiative for Rebuilding and Resiliency includes several storm protection strategies that are being contemplated for the southern shore of Staten Island (i.e., coastal protection strategies to minimize upland wave zones that include beach nourishment, protection of coastal forests and construction of living breakwaters) achieved by elements of the Preferred Alternative, and continued investment in the borough's Bluebelt stormwater management system. The MillionTreesNYC initiative of PlaNYC has included ongoing reforestation of treeless areas of Conference House Park.
- USACE South Shore of Staten Island Coastal Storm Risk Management Project—(CSRMP) spans approximately 5.3 miles from Fort Wadsworth to Oakwood Beach on the eastern side of the south shore of Staten Island. The CSRMP includes a Line of Protection (LOP) consisting of a buried seawall/armored levee along 80% of the Fort Wadsworth to Oakwood Beach reach that would protect the coast against severe coastal surge flooding and wave forces. The remaining 20% of the reach would include a vertical floodwall, levee, and a mosaic of tidal wetland, maritime forest/scrub/shrub, low marsh, and high marsh improvements.
- New York Harbor Foundation's Billion Oyster Project—The Billion Oyster Project (BOP) is an ecosystem restoration and education project aimed at restoring the New York Harbor Estuary through the creation of oyster reef habitat and the establishment of sustainable oyster populations. BOP partners with the Urban Assembly New York Harbor School, where students help to raise and set oyster larvae, operate and maintain vessels, build and operate oyster nurseries, design underwater monitoring equipment, and conduct long-term research projects in the harbor. Through these efforts and in collaboration with many regional partners, BOP hopes to counter the effects of overharvesting, habitat loss, dredging, and pollution, and to bring oysters and their dynamic reef habitat back to the harbor. As of 2017, BOP has restored over 25 million oysters to the NY Harbor.
- New York/New Jersey Baykeeper—New York/New Jersey Baykeeper's Restoration Program focuses on reintroducing oysters to the New York and New Jersey waterways through a variety of measures, including aquaculture, reef building and monitoring, and the construction of living shorelines. Baykeeper raises juvenile oysters at an aquaculture facility, where they attach, set, and grow on shell substrate or structures such as oyster castles prior to being placed onto reefs. Once oysters are placed, Baykeeper monitors survivorship and growth, water quality and biodiversity in and around the reef. Baykeeper manages a 10.7-acre site along with a 0.9-acre living shoreline project site at Naval Weapons Station Earle in NJ and a 1-acre oyster reef in the Bronx River. These projects provide substrate for new oysters, add habitat to increase species diversity, and provide a breakwater for shoreline protection. The Bronx River site provides opportunities for public education and stewardship. Baykeeper introduces between 200,000 and 500,000 oysters to the Harbor annually. In 2017, natural set was found at the Naval Weapons Station Earle project site.
- Active fisheries management plans or harvest regulations—Many aquatic species in the region have management plans that have been implemented to promote the long-term productivity of these resources and sustainability of the fisheries in New York's coastal

waters and along the Atlantic coast. Management plans and/or harvest regulations for certain species found in Raritan Bay are developed by the Mid-Atlantic Fisheries Management Council, the New England Fisheries Management Council, and the Atlantic States Marine Fisheries Commission. The United States Food and Drug Administration (USFDA) sets strict industry standards for States' shellfish industries.

The Proposed Actions would not adversely affect the continued improvements to water quality of Raritan Bay, nor would it affect future improvements in EFH resulting from these regional programs. The continued improvements in water quality in the New York Harbor and Raritan Bay resulting from the programs listed above, along with the habitat conversion provided by the reef-like structure of the breakwaters, would enhance EFH in the study area. The breakwaters would provide complex hard substrate that would serve as refugia and foraging habitat for juvenile fish, consistent with the goals of the HRE-CRP. The breakwaters would offer sheltering and/or foraging habitat for HRE-CRP target species, including black sea bass, striped bass, American eel, blue crab and eastern oyster, and the one-time shoreline restoration could enhance spawning habitat for horseshoe crab. The intertidal and emergent portions of the breakwaters would also provide some habitat for waterbirds. There would be an increase in foraging opportunities for designated EFH species and other organisms due to the establishment of encrusting organisms, macroalgae, and benthic macroinvertebrates on and among the breakwaters, and the survival of these organisms would be aided by the continued improvements in water quality. Stabilization of the shoreline and reduction or reversal of erosion that would result from the Proposed Actions would be consistent with efforts to restore and protect coastal habitats in Raritan Bay (e.g., wetland restoration, coastal forest protection, marsh improvements) and would be in line with the goals of the HRE-CRP.

I. MINIMIZATION AND MITIGATION

The Proposed Actions would result in the conversion of soft bottom sandy substrate to complex rocky habitat within the study area. Measures incorporated into the Proposed Actions to minimize adverse impacts to EFH include the following:

- Timing the placement of sand for the one-time shoreline restoration to avoid the peak spawning season for horseshoe crabs (late May through early June). The material used for restoration would be similar in composition to existing sand substrate at the beach and within Conference House Park.
- Timing the construction of the breakwaters and shoreline restoration to avoid the winter flounder spawning period (early January through late May).
- Use of best management practices to minimize the release of suspended sediments during sand placement, including placement of the material above MHWS at low tide where possible and using turbidity barriers where feasible.
- Maintaining at least 2 feet of clearance from the bottom of the Bay, or work only at tide levels sufficient to keep construction barges and vessels off the bottom.
- Construction of the breakwater segments sequentially, such that only a small footprint of the Bay is affected at a time. As each segment is completed, habitat-forming organisms would begin to colonize the structure, providing foraging opportunities for predator species.
- Conversion of 11.4 acres of soft bottom sandy substrate to porous hard structure with ecological enhancements. Ecological enhancements will be incorporated into the design of the breakwater segments, including the creation of three-dimensional hard/rocky structured reef-like habitat with reef streets and eco-enhanced concrete units. The use of these design

measures would increase the quantity and diversity of the aquatic habitats available for habitat-forming flora and fauna found in Raritan Bay.

- The Breakwaters Project would result in a loss of approximately 3.6 acres of Waters of the U.S. and associated habitat that would no longer be available to aquatic organisms due to the portion of the breakwater structures above MHW. This loss would result in adverse impacts to aquatic resources and would be mitigated pursuant to the Clean Water Act through measures that may include available credits from an approved mitigation bank, and restoration/enhancement of Waters of the U.S. within the Raritan Bay watershed in New York.
- Enhancement of the 0.8-acre tidal wetland through increased tidal exchange with Raritan Bay, removal of the unpermitted sand bridge, removal of Phragmites, and re-establishment of native saltmarsh plant species. Existing native saltmarsh vegetation that is currently within the wetland would be retained to the extent possible, and individual plants and seeds would be collected for preservation and replanting within the wetland. Additional native saltmarsh plants would be re-established through seeding or planting plugs to supplement the native saltmarsh vegetation that already occurs in the wetland. Post-construction monitoring would be conducted in accordance with the New York State Salt Marsh Restoration and Monitoring Guidelines.
- Development of a post-construction monitoring and adaptive management plan to assess the structural integrity and condition of the breakwater structures, their effectiveness at attenuating storm waves and reducing shoreline erosion, along with establishing what corrective measures may be needed should an issue arise and when such corrective measures should be implemented. Future determination of any need for modification(s) to the breakwater structures would be in accordance with the Adaptive Management Plan developed for the project and at a minimum would consider the following:
  - results of regular monitoring of wave attenuation and shoreline resilience being achieved by the Living Breakwaters and Shoreline Project working in tandem, as will be required by NYSDEC and USACE as a permit condition;
  - potential impacts to sediment transport and other secondary impacts to the shoreline that would have the potential to result from modifications made to the breakwater system; and
  - potential direct and indirect impacts to aquatic biota associated with habitat conversion and modification that would result from the expansion of the breakwater footprint that would be required to raise the heights of the breakwater structures.

J. REFERENCES

Able, K.W., and A.L. Studholme. 1993. Habitat quality in the New York/New Jersey Harbor Estuary: An evaluation of pier effects on fishes. Progress Report. Hudson River Foundation, New York, NY.

Able, K.W., J.P. Manderson, and A.L. Studholme. 1998. The distribution of shallow water juvenile fishes in an urban estuary: The effects of manmade structures in the lower Hudson River. Estuaries 21:731–744.

Able, K.W., and J.T. Duffy-Anderson. 2006. Impacts of piers in the lower Hudson River. Pp. 428440 in: The Hudson River Estuary (J.S. Levinton and J.R.Waldman, eds.). Cambridge University Press, New York, NY.

Able, K.W., and M.P. Fahay (eds.). 2010. Ecology of Estuarine Fishes: Temperate Waters of the Western North Atlantic. The Johns Hopkins University Press, Baltimore, MD.

Able, K.W., and T.M. Grothues. 2011. Behavior of Fishes Associated with Piers: Responses in the Lower Hudson River. Final Report submitted to the City of New York Department of Parks and Recreation. June 13, 2011.

Able, K.W., T.M. Grothues, and I.M. Kemp. 2013. Fine-scale distribution of pelagic fishes relative to a large urban pier. Marine Ecology Progress Series 476: 185-198.

Adams, D.A., J.S. O'Connor, and S.B. Weisberg. 1998. Final Report: Sediment Quality of the NY/NJ Harbor System. An Investigation under the Regional Environmental Monitoring and Assessment Program (R-EMAP). EPA/902-R-98-001.

AKRF, Inc. (AKRF), PBS&J, Inc., Philip Habib & Associates, al Perspectives, Inc., and A&H Engineers, P.C. 1998. Hudson River Park Project Final Environmental Impact Statement. Prepared for the Empire State Development Corporation in cooperation with the Hudson River Park Conservancy. May 1998.

Anderson. M.J., R.B. Ford, D.A. Feary, and C. Honeywill. 2004. Quantitative measures of sedimentation in an estuarine system and its relationship with intertidal soft-sediment infauna. Marine Ecology Progress Series 272: 33-48.

Atlantic States Marine Fisheries Commission (ASMFC). 2005. Amendment I to the Interstate Fishery Management Plan for Atlantic Croaker. November 2005.

Atlantic States Marine Fisheries Commission (ASMFC). 2007. Species Profile: Atlantic Croaker, Amendment Seeks to Maintain Healthy Mid-Atlantic Stock Component. ASMFC Fisheries Focus, Vol. 16, Issue 3. April 2007.

Atlantic States Marine Fisheries Commission (ASMFC). 2010a. Atlantic Croaker Benchmark Assessment Finds Resource on the Increase and Overfishing Not Occurring. ASMFC News Release. August 5, 2010.

Atlantic States Marine Fisheries Commission (ASMFC). 2010b. Spot Life History Report. Report to the ASMFC South Atlantic State/Federal Fisheries Management Board. April 2010.

Atlantic States Marine Fisheries Commission (ASMFC). 2012a. Omnibus Amendment to the Interstate Fishery Management Plan for Spanish Mackerel, Spot, and Spotted Seatrout. Chapter 5: Spot. February 2012.

Atlantic States Marine Fisheries Commission (ASMFC). 2012b. Species Profile: Weakfish. Recovery of Historically Important Species Hindered by High Natural Mortality. ASMFC Fisheries Focus, Vol. 21, Issue 5. July 2012.

Atlantic States Marine Fisheries Commission (ASMFC). 2012c. Habitat Addendum IV to Amendment 1 to the Interstate Fishery Management Plan for Atlantic Sturgeon. September 2012.

Atlantic States Marine Fisheries Commission (ASMFC). 2013. 2013 Horseshoe Crab Stock Assessment Update. August 2013.

Atlantic States Marine Fisheries Commission (ASMFC). 2014a. 2013 Review of the Atlantic States Marine Fisheries Commission's Interstate Fishery Management Plan for Winter

Flounder (*Pseudopleuronectes americanus*). 2012 Fishing Year (May 2012 – April 2013). February 2014.

Atlantic States Marine Fisheries Commission (ASMFC). 2014b. Species Profile: American Shad. Excerpted from ASMFC Fisheries Focus, Volume 23, Issue 1. February/March 2014.

Atlantic States Marine Fisheries Commission (ASMFC). 2015a. Addendum XXVI to the Summer Flounder, Scup, Black Sea Bass Fishery Management Plan; Summer Flounder Recreational Management in 2015. February 2015.

Atlantic States Marine Fisheries Commission (ASMFC). 2015b. Life History and Habitat Needs, American Eel. December 2015.

Atlantic States Marine Fisheries Commission (ASMFC). 2015c. Life History and Habitat Needs, Atlantic Croaker. December 2015.

Atlantic States Marine Fisheries Commission (ASMFC). 2015d. Life History and Habitat Needs, Atlantic Menhaden. December 2015.

Atlantic States Marine Fisheries Commission (ASMFC). 2015e. Life History and Habitat Needs, Blueback Herring. December 2015.

Atlantic States Marine Fisheries Commission (ASMFC). 2015f. Life History and Habitat Needs, Horseshoe Crab. December 2015.

Atlantic States Marine Fisheries Commission (ASMFC). 2015g. Life History and Habitat Needs, Spot. December 2015.

Atlantic States Marine Fisheries Commission (ASMFC). 2015h. Life History and Habitat Needs, Striped Bass. December 2015.

Atlantic States Marine Fisheries Commission (ASMFC). 2016a. Addendum XXVII to the Summer Flounder, Scup, Black Sea Bass Fishery Management Plan; Summer Flounder and Black Sea Bass Recreational Management in 2016. February 2016.

Atlantic States Marine Fisheries Commission (ASMFC). 2016b. 2016 Review of the Atlantic States Marine Fisheries Commission Fishery Management Plan for the 2015 Summer Flounder Fishery. November 2016.

Atlantic States Marine Fisheries Commission (ASMFC). 2016c. Memorandum: 2016 Atlantic Striped Bass Stock Assessment Update. Atlantic Striped Bass Technical Committee. October 5, 2016.

Atlantic States Marine Fisheries Commission (ASMFC). 2016d. 2016 Weakfish Benchmark Stock Assessment. May 2016.

Atlantic States Marine Fisheries Commission (ASMFC). 2016e. Weakfish Assessment Indicates Stock is Depleted and Overfishing Not Occurring. ASMFC News Release. May 5, 2016.

Atlantic States Marine Fisheries Commission (ASMFC). 2017a. ASMFC Stock Assessment Overview: River Herring. August 2017.

Atlantic States Marine Fisheries Commission (ASMFC). 2017b. 2017 Atlantic Croaker Stock Assessment Peer Review. Conducted on April 18-21, 2017. May 2017

Atlantic States Marine Fisheries Commission (ASMFC). 2017c. 2017 Atlantic Menhaden Stock Assessment Update. August 2017.

Atlantic States Marine Fisheries Commission (ASMFC). Undated. Life History and Habitat Needs, Alewife.

Atlantic Sturgeon Status Review Team (ASSRT). 2007. Status Review of Atlantic Sturgeon (*Acipenser oxyrinchus oxyrinchus*). Report to National Marine Fisheries Service, Northeast Regional Office. February 23, 2007.

Auld, A.H., and J.R. Schubel. 1978. Effects of suspended sediments on fish eggs and larvae: a laboratory assessment. Estuarine and Coastal Marine Science 6: 153-164.

Bain, M.B. 1997. Atlantic and shortnose sturgeons of the Hudson River: common and divergent life history attributes. Environmental Biology of Fishes 48: 347-358.

Bain, M., J. Lodge, D. J. Suszkowski, D. Botkin, A. Brash, C. Craft, R. Diaz, K. Farley, Y. Gelb, J.S. Levinton, W. Matuszeski, F. Steimle and P. Wilber. 2007. Target Ecosystem Characteristics for the Hudson Raritan Estuary: Technical Guidance for Developing a Comprehensive Ecosystem Restoration Plan. A report to the Port Authority of NY/NJ. Hudson River Foundation, New York, NY. 106 pp.

Bain, M.B., M.S. Meixler, and G.E. Eckerlin. 2006. Biological Status of Sanctuary Waters of the Hudson River Park in New York. Final Project Report for the Hudson River Park Trust. Cornell University.

Beck, M.W., K.L. Heck, Jr., K.W. Able, D.L. Childers, D.B. Eggleston, B.M. Gillanders, B. Halpern, C.G. Hays, K. Hoshino, T.J. Minello, R.J. Orth, P.F. Sheridan, and M.P. Weinstein. 2001. The identification, conservation, and management of estuarine and marine nurseries for fish and invertebrates. BioScience 51: 633-641.

Berg, D. L., and J. S. Levinton. 1985. The biology of the Hudson-Raritan estuary, with emphasis on fishes. NOAA Technical Memorandum NOS OMA 16. Rockville, MD. April 1985. 180 pp.

Bigelow, H.B., and W.C. Schroeder. 1953. Fishes of the Gulf of Maine. Fishery Bulletin of the Fish and Wildlife Service Volume 53.

Bohnsack, J.A., A.M. Ecklund, and A.M. Szmant. 1997. Artificial reef research: Is there more than the attraction-production issue? Fisheries 22: 14-16.

Breitburg, D.L. 1988. Effects of turbidity on prey consumption by striped bass larvae. Transactions of the American Fisheries Society 117: 72-77.

Briggs, P. T., and J. R. Waldman. 2002. Annotated list of fishes reported from the marine waters of New York. Northeastern Naturalist. 9: 47-80.

Brinkhuis, B.H. 1980. Biological effects of sand and gravel mining in the Lower Bay of New York Harbor: an assessment from the literature. Marine Sciences Research Center State University of New York. Special Report 34, Reference No. 80-1. January 1980.

Brosnan, T.M., and M.L. O'Shea. 1995. New York Harbor Water Quality Survey: 1994. New York City Department of Environmental Protection, Marine Sciences Section, Wards Island, NY.

Buckel, J.A., and D.O. Conover. 1997. Movements, feeding periods, and daily ration of piscivorous young-of-the-year bluefish, *Pomatomus saltatrix*, in the Hudson River estuary. Fisheries Bulletin 95: 665-679.

Buckel, J.A., D.O. Conover, N.D. Steinberg, and K.A. Mckown. 1999. Impact of age-0 bluefish (*Pomatomus saltatrix*) predation on age-0 fishes in the Hudson River estuary: evidence for density-dependent loss of juvenile striped bass (*Morone saxatilis*). *Canadian Journal of Fisheries and Aquatic Sciences* 56:275-287.

Burt, J., A. Bartholomew, P. Usseglio, A. Bauman, and P.F. Sale. 2009. Are artificial reefs surrogates of natural habitats for corals and fish in Dubai, United Arab Emirates? Coral Reefs 28: 663-675.

Burton, W.H. 1993. Effects of bucket dredging on water quality in the Delaware River and the potential for effects on fisheries resources. Prepared for: Delaware Basin Fish and Wildlife Management Cooperative, by Versar Inc., Columbia MD.

Carr, M.H., and M.A. Hixon. 1997. Artificial reefs: The importance of comparisons with natural reefs. Fisheries 22: 28-33.

Cenci, E., M. Pizzolon, N. Chimento, and C. Mazzoldi. 2011. The influence of a new artificial structure on fish assemblages of adjacent hard substrata. Estuarine, Coastal and Shelf Science 91: 133-149.

Cerrato, R.M. 2006. Long-term and large-scale patterns in the benthic communities of New York Harbor. Pp. 242-265 in: The Hudson River Estuary (J. Levinton and J. Waldman, eds.). Cambridge University Press.

Chang, S., P.L. Berrien, D.L. Johnson, and W.W. Morse. 1999. Essential Fish Habitat Source Document: Windowpane, *Scophthalmus aquosus*, Life History and Habitat Characteristics. National Marine Fisheries Service. NOAA Technical Memorandum NMFS-NE 137.

Chapman, M.G. 2002. Early colonization of shallow subtidal boulders in two habitats. Journal of Experimental Marine Biology and Ecology 275:95-116.

Chesapeake Bay Stock Assessment Committee (CBSAC). 2017. 2017 Chesapeake Bay Blue Crab Advisory Report. June 26, 2017.

Clarke, D.G., and D.H. Wilber. 2001. Assessment of potential impacts of dredging operations due to sediment resuspension. DOER Technical Notes Collection (ERDC TN-DOER-E9), US Army Engineer Research and Development Center, Vicksburg, MS.

Collette, B.B., and G. Klein-MacPhee (eds.). 2002. Fishes of the Gulf of Maine. Smithsonian Institution, Washington, D.C.

Cross, J.N., C.A. Zetlin, P.L. Berrien, D.L. Johnson, and C. McBride. 1999. Essential Fish Habitat Source Document: Butterfish, *Peprilus triacanthus* Life History and Habitat Characteristics. National Marine Fisheries Service. NOAA Technical Memorandum NMFS-NE 145.

Deroba, J. 2015. Atlantic Herring Operational Assessment Report 2015. NOAA Fisheries Northeast Fisheries Science Center. August 2015.

Diaz, R.J., and C.P. Onuf. 1985. Habitat suitability index models: juvenile Atlantic croaker (revised). United States Fish and Wildlife Service Biological Report 82, 23 pp.

Duffy-Anderson, J.T., J.P. Manderson, and K.W. Able. 2003. A characterization of juvenile fish assemblages around man-made structures in the New York-New Jersey Harbor Estuary, U.S.A. Bulletin of Marine Science 72: 877-889.

Duffy-Anderson, J.T., and K.W. Able. 1999. Effects of municipal piers on the growth of juvenile fishes in the Hudson River estuary: a study across a pier edge. Marine Biology 133:409-418.

Dunton, K.J., A. Jordaan, K.A. McKown, D.O. Conover, and M.G. Frisk. 2010. Abundance and distribution of Atlantic sturgeon (*Acipenser oxyrinchus*) within the Northwest Atlantic Ocean, determined from five fishery-independent surveys. Fisheries Bulletin 108:450-465.

Ellis, J.K. 2003. Diet of the sandbar shark, *Carcharhinus plumbeus*, in Chesapeake Bay and adjacent waters. College of William and Mary Virginia Institute of Marine Science. M.S. thesis.

Evans, A.J., L.B. Firth, S.J. Hawkins, E.S. Morris, H. Goudge, and P.J. Moore. 2016. Drill-cored rock pools: an effective method of ecological enhancement on artificial structures. Marine and Freshwater Research 67: 123-130.

Fahay, M.P., P.L. Berrien, D.L. Johnson, and W.W. Morse. 1999. Essential Fish Habitat Source Document: Bluefish, *Pomatomus saltatrix* Life History and Habitat Characteristics. National Marine Fisheries Service. NOAA Technical Memorandum NMFS-NE 144.

Firth, L.B., M. Schofield, F. J. White, M. W. Skova, S. J. Hawkins. 2014. Biodiversity in intertidal rock pools: Informing engineering criteria for artificial habitat enhancement in the built environment. Marine Environmental Research 102: 122-130.

Flood, R.D., and V.L. Ferrini. 1998. Analysis of seismic profiles and side-scan sonar records from Lower New York Harbor, a progress report. Marine Sciences Research Center, State University of New York – Stony Brook.

Food and Agriculture Organization of the United Nations (FAO). 2017. Cultured Aquatic Species Information Programme: *Rachycentron canadum*. Available www.fao.org/fishery/culturedspecies/Rachycentron_canadum/en. Accessed September 6, 2017.

Godcharles, M.F. and M.D. Murphy. 1986. Species profiles: Life history and environmental requirements of coastal fishes and invertebrates (South Florida), King Mackerel and Spanish Mackerel. Biological Report TR EL-82-4.

Goodwin, C.R. 1991. Simulation of the effects of proposed tide gates on circulation, flushing, and water quality in residential canals, Cape Coral, Florida. U.S. Geological Survey Open-File Report 91-237.

Goto, D., and W.G. Wallace. 2009. Biodiversity loss in benthic macroinfaunal communities and its consequence for organic mercury trophic availability to benthivorous predators in the lower Hudson River estuary, USA. Marine Pollution Bulletin 58:1909-1915.

Grabowski, J.H., C.H. Peterson, K. Cuddington, J. Byers, W. Wilson, and A. Hastings. 2007. Restoring oyster reefs to recover ecosystem services. Ecosystem engineers: plants to protists: 281-298.

Greene, K.E., J.L. Zimmerman, R.W. Laney, and J.C. Thomas-Blate. 2009. Atlantic Coast Diadromous Fish Habitat: A Review of Utilization, Threats, Recommendations for Conservation, and Research Needs. ASMFC Habitat Management Series #9. January 2009.

Gregalis, K.C., S.P. Powers, and K.L. Heck, Jr. 2008. Restoration of oyster reefs along a bio-physical gradient in Mobile Bay, Alabama. Journal of Shellfish Research 27: 1163-1169.

Hazen and Sawyer. 1983. Newtown Creek Water Pollution Control Plant. Revised application for modification of the requirements of secondary treatment under Section 301(h), PL 97-117. Prepared for the City of New York, Department of Environmental Protection.

Heimbuch, D., S. Cairns, D. Logan, S. Janicki, J. Seibel, D. Wade, M. Langan, and N. Mehrotra. 1994. Distribution Patterns of Eight Key Species of Hudson River Fish. Coastal Environmental Services, Inc. Linthicum, MD. Prepared for the Hudson River Foundation, New York, NY.

Hill, K. 2004. Indian River Lagoon Species Inventory: *Mercenaria mercenaria* Linnaeus, 1758. Smithsonian Marine Station at Fort Pierce. Updated November 8, 2004. Available https://www.sms.si.edu/irlspec/Mercen_mercen.htm.

Kastens, K.A., C.T. Fray, J.R. Schubel, and R.E. Wilson. 1978. Environmental effects of sand mining in the Lower Bay of New York Harbor. Marine Science Research Center, State University of New York – Stony Brook. September 1978.

Knickle, C. 2012. Description Sandbar Shark-*Carcharhinus plumbeus*. Florida Museum of Natural History. Available http://www.flmnh.ufl.edu/fish/gallery/descript/sandbarshark/sandbarshark.htm, July 19, 2012.

Knott, N.A., A.J. Underwood, M.G. Chapman, and T.M. Glasby. 2004. Epibiota on vertical and on horizontal surfaces on natural reefs and on artificial structures. Journal of the Marine Biological Association of the United Kingdom 84: 1117-1130.

Kynard, B., and M. Horgan. 2002. Ontogenetic behavior and migration of Atlantic sturgeon *Acipenser oxyrinchus oxyrinchus*, and shortnose sturgeon *A. brevirostrum*, with notes on social behavior. Environmental Biology of Fishes 63:137-150.

Lanford, P.C.M. 1981. Distribution of fish and other organisms associated with an artificial floating tire breakwater in Lake Carl Blackwell, Oklahoma. Thesis, Oklahoma State University. July 1981.

Lenihan, H. S., and C. H. Peterson. 1998. How habitat degradation through fishery disturbance enhances impacts of hypoxia on oyster reefs. Ecological Applications 8: 128-140.

Lindquist, D.G., M.V. Ogburn, W.B. Stanley, H.L. Troutman, and S.M. Pereira. 1985. Fish utilization patterns on temperate rubble-mound jetties in North Carolina. Bulletin of Marine Science 37: 244-251.

LaSalle, M.W., D.G. Clarke, J. Homziak, J.D. Lunz, and T.J. Fredette. 1991. A framework for assessing the need for seasonal restrictions on dredging and disposal operations.

Department of the Army, Environmental Laboratory, Waterways Experiment Station, Corps of Engineers, Vicksburg, Mississippi.

Lawler, Matusky, and Skelly Engineers, LLP (LMS). 2003a. New York and New Jersey Harbor Navigation Project, Aquatic Biological Sampling Program 2001-2002, Final Report. Prepared for the US Army Corps of Engineers, New York District, Environmental Review Section.

Lawler, Matusky, and Skelly Engineers, LLP (LMS). 2003b. New York and New Jersey Harbor Navigation Project, Aquatic Biological Sampling Program 2002-2003, Final Report. Prepared for the US Army Corps of Engineers, New York District, Environmental Review Section.

Lonsdale, D.J., and E.M. Cosper. 1994. Phytoplankton Productivity and Zooplankton Feeding and Productivity in the Lower Hudson River Estuary. Marine Sciences Research Center, SUNY, Stony Brook, NY. Final report to the Hudson River Foundation, New York, NY.

Luckenbach, M.W., L.D. Coen, P.G. Ross, Jr., and J.A. Stephan. 2005. Oyster reef habitat restoration relationships between oyster abundance and community development based on two studies in Virginia and South Carolina. Journal of Coastal Research 40: 64-78.

MacKenzie, C. L,. Jr. 1990. History of the fisheries of Raritan Bay, New York and New Jersey. Marine Fisheries Review 52: 1-45.

Mann, R., and J. Harding. 1997. Trophic studies on constructed “restored” oyster reefs. Grant Report to U. S. Environmental Protection Agency, Chesapeake Bay Program Office, Grant No. CB993267-02-1 awarded to the Virginia Institute of Marine Science, Gloucester Point, Virginia. August 1997. 35 pp.

Mann, R., and J. Harding. 1998. Continuing trophic studies on constructed “restored” oyster reefs. Grant Report to U. S. Environmental Protection Agency, Chesapeake Bay Program Office, Grant No. CB993267-03 awarded to the Virginia Institute of Marine Science, Gloucester Point, Virginia. June 1998. 71 pp.

Mann, K.H., and J.R.N. Lazier. 1996. Dynamics of Marine Ecosystems: biological physical interactions in the oceans, 2nd Edition. Blackwell Science, Inc. Cambridge, Massachusetts. 394 pp.

Maryland Department of Natural Resources (MDNR). 2017. Mya Life History, *Mya Arenaria*, Softshell clam. Available: dnr.maryland.gov/fisheries/Pages/shellfish-monitoring/mya-history.aspx. Accessed September 5, 2017.

Mercer, L.P. 1989. Species profiles: life histories and environmental requirements of coastal fishes and invertebrates (Mid-Atlantic) – weakfish. USFWS Biological Report 82 (11.109). USACE TR EL-82-4, 17 pp.

Merson, R. and Pratt, H. 1997. Northern extent of the pupping grounds of the sandbar shark, *Carcharhinus plumbeus*, east coast. Abstract: ASIH/AES Meeting, Seattle, WA, June 26-July 2, 1997.

Mid-Atlantic Fishery Management Council (MAFMC). 2002. Council Management, A Quiet Success Story. Council Newsletter, Summer 2002.

Mikami, S., Y. Nakane, and M. Sano. 2012. Influence of offshore breakwaters on fish assemblage structure in the surf zone of a sandy beach in Tokyo Bay, central Japan. Fish Science 78: 113-121.

Morreale, S.J. and E.A. Standora. 1994. Occurrence, movement, and behavior of Kemp's ridley and other sea turtles in New York waters. Final Report of the Okeanos Ocean Research Foundation submitted to the New York Department of Environmental Conservation.

Morreale, S.J. and E.A. Standora. 1998. Early life stage ecology of sea turtles in northeastern US waters. NOAA Technical Memorandum NMFS-SEFSC-413.

Morton, T. 1989. Species profiles: life histories and environmental requirements of coastal fishes and invertebrates (Mid-Atlantic) – bay anchovy. USFWS Biological Report 82 (11.97), 13 pp.

Musetta-Lambert, J.L., R.A. Scrosati, E.A. Keppel, M.A. Barbeau, M.A. Skinner, and S.C. Courtenay. 2015. Intertidal communities differ between breakwaters and natural rocky areas on ice-scoured Northwest Atlantic coasts. Marine Ecology Progress Series 539: 19-31.

National Marine Fisheries Service (NMFS). 2003. Annual Report to Congress on the Status of U.S. Fisheries—2002, U.S. Dept. Commerce, NOAA, National Marine Fisheries Service, Silver Spring, MD.

National Marine Fisheries Service (NMFS). 2009. Final Amendment 1 to the 2006 Consolidated Atlantic Highly Migratory Species Fishery Management Plan, Essential Fish Habitat. June 2009.

National Marine Fisheries Service (NMFS). 2013. Highly Migratory Species: Atlantic Sharks Management Measures; Amendment 5a. Published in 78 CFR 40318. July 3, 2013. Available at: http://www.nmfs.noaa.gov/sfa/hms/news/federalregister/2013/7/07-03-13_amendment_5a_final_rule_and_gulf_of_mexico_blacktip_closure_78_fr_40318.pdf.

National Marine Fisheries Service (NMFS). 2015. Letter from M. Murray-Brown, NMFS, to C. Seewagen, AKRF, re Living Breakwaters and Tottenville Dune Projects in Richmond County, New York. May 14, 2015.

National Marine Fisheries Service (NMFS). 2017a. Marine Recreational Information Program (MRIP) Survey Data. Available http://www.st.nmfs.noaa.gov/recreational-fisheries/data-and-documentation/downloads. Accessed September 2017.

National Marine Fisheries Service (NMFS). 2017b. Stock Status as of June 30, 2017. Available: http://www.nmfs.noaa.gov/sfa/fisheries_eco/status_of_fisheries/archive/2017/second/q2-2017-stock-status-update.pdf.

National Marine Fisheries Service (NMFS). 2017c. Letter from Karen Greene, NMFS, to Daniel Greene, GOSR, re Coastal and Social Resiliency Initiatives for Tottenville Shoreline, Staten Island, New York Essential Fish Habitat Assessment. May 22, 2017.

National Marine Fisheries Service (NMFS). 2017d. Endangered and Threatened Species; Designation of Critical Habitat for the Endangered New York Bight, Chesapeake Bay, Carolina and South Atlantic Distinct Population Segments of Atlantic Sturgeon and the Threatened Gulf of Maine Distinct Population Segment of Atlantic Sturgeon. Final Rule. 82 Federal Register 39160-39274. August 17, 2017.

National Oceanic and Atmospheric Administration (NOAA). 1995. National Status and Trends Program for Marine Environmental Quality. Magnitude and extent of sediment toxicity in the Hudson-Raritan Estuary. Silver Spring, MD. August 1995.

National Oceanic and Atmospheric Administration (NOAA). 2001a. Environmental Sensitivity Index Maps. October 2001.

National Oceanic and Atmospheric Administration (NOAA). 2001b. Letter regarding NMFS's biological opinion on FERC's issuance of a permit for Millennium pipeline. United States Department of Commerce. National Marine Fisheries Service, Northeast Region. September 4, 2001.

National Oceanic and Atmospheric Administration (NOAA). 2016. Summary of Essential Fish Habitat (EFH) Designation. Available http://www.greateratlantic.fisheries.noaa.gov/hcd/STATES4/new_jersey/40307410.html

Nelson, D.A., and J.L. Wheeler. 1997. The influence of dredging-induced turbidity and associated contaminants upon hatching success and larval survival of winter flounder, *Pleuronectes americanus*, a laboratory study. Final Report, Grant CWF #321-R, to Connecticut Department of Environmental Protection, by National Marine Fisheries Service, Milford CT.

New York City Department of Environmental Protection (NYCDEP). 2007. East River and Open Waters Waterbody/Watershed Facility Plan Report.

New York City Department of Environmental Protection (NYCDEP). 2010. New York Harbor Water Quality Survey Report for 2009.

New York City Department of Environmental Protection (NYCDEP). 2012. The State of the Harbor 2012.

New York State Department of Environmental Conservation (NYSDEC). 2010. Raritan Bay/Lower Bay Watershed, Impaired Segment, Raritan Bay (Class SA) (1701-0002). Revised December 31, 2010.

New York State Department of Environmental Conservation (NYSDEC). 2014. Final 2014 New York State Section 303(d) List of Impaired/TMDL Waters. September 2014.

New York State Department of Environmental Conservation (NYSDEC). 2015. New York State Wildlife Action Plan. Species of Greatest Conservation Need (SGCN) High Priority: Marine Mollusks. September 2015.

New York State Department of Environmental Conservation (NYSDEC). 2017. Shellfish Harvest Limits. Available www.dec.ny.gov/outdoor/29870.html. Accessed September 5, 2017.

New York State Department of State (NYSDOS). 1992. Significant Coastal Fish and Wildlife Habitats Program: A part of the New York Coastal Management Program and New York City's approved Waterfront Revitalization Program.

Newcombe, C.P., and D.D. MacDonald. 1991. Effects of suspended sediments on aquatic ecosystems. North American Journal of Fisheries Management 11: 72-82.

Newell, R.C., L.J. Seiderer, and D.R. Hitchcock. 1998. The impact of dredging works in coastal waters: A review of the sensitivity to disturbance and subsequent recovery of biological

resources on the sea bed. Oceanography and Marine Biology: an Annual Review 36: 127-178.

Norkko, A., J.E. Hewitt, S.F. Thrush, and T. Funnell. 2001. Benthic-pelagic coupling and suspension-feeding bivalves: Linking site-specific sediment flux and biodeposition to benthic community structure. Limnology and Oceanography 46: 2067-2072.

Normandeau Associates. 2015a. Assessment of Existing Condition of Benthic and Fish Communities for the Living Breakwaters and Tottenville Dune Projects: July 2015 Survey Results. 12 pp.

Normandeau Associates. 2015b. Assessment of Existing Condition of Benthic and Fish Communities for the Living Breakwaters and Tottenville Dune Projects: July and September 2015 Benthic Survey Results. 46 pp.

Northeast Fisheries Science Center (NEFSC). 2006. 42nd Northeast Regional Stock Assessment Workshop (42nd SAW). Stock Assessment Report, Part A: Silver Hake, Atlantic Mackerel, & Northern Shortfin Squid. May 2006.

Northeast Fisheries Science Center (NEFSC). 2014. 58th Northeast Regional Stock Assessment Workshop (58th SAW), Assessment Summary Report. March 2014.

Northeast Fisheries Science Center (NEFSC). 2015a. 60th Northeast Regional Stock Assessment Workshop (60th SAW), Assessment Report. August 2015.

Northeast Fisheries Science Center (NEFSC). 2015b. Southern New England Mid-Atlantic Winter Flounder, 2015 Assessment Update Report. September 2015.

Northeast Fisheries Science Center (NEFSC). 2016. 62nd Northeast Regional Stock Assessment Workshop (62nd SAW). Stock Assessment for Black Sea Bass for 2016. December 2016.

Packer, D.B., S.J. Griesbach, P.L. Berrien, C.A. Zetlin, D.L. Johnson, and W.W. Morse. 1999. Essential Fish Habitat Source Document: Summer Flounder, *Paralichthys dentatus*, Life History and Habitat Characteristics. National Marine Fisheries Service. NOAA Technical Memorandum NMFS-NE 151.

Packer, D.B., C.A. Zetlin, and J.J. Vitaliano. 2003a. Essential Fish Habitat Source Document: Clearnose Skate, *Raja eglanteria*, Life History and Habitat Characteristics. National Marine Fisheries Service. NOAA Technical Memorandum NMFS-NE-174.

Packer, D.B., C.A. Zetlin, and J.J. Vitaliano. 2003b. Essential Fish Habitat Source Document: Little Skate, *Leucoraja erinacea*, Life History and Habitat Characteristics. National Marine Fisheries Service. NOAA Technical Memorandum NMFS-NE-175.

Packer, D.B., C.A. Zetlin, and J.J. Vitaliano. 2003c. Essential Fish Habitat Source Document: Winter Skate, *Leucoraja ocellata*, Life History and Habitat Characteristics. National Marine Fisheries Service. NOAA Technical Memorandum NMFS-NE-179.

Pereira, J.J., R. Goldberg, J.J. Ziskowski, P.L. Berrien, W.W. Morse, and D.L. Johnson. 1999. Essential Fish Habitat Source Document: Winter Flounder, *Pseudopleuronectes americanus*, Life History and Habitat Characteristics. National Marine Fisheries Service. NOAA Technical Memorandum NMFS-NE 138.

Perkol-Finkel, S., and I. Sella. 2014. Ecologically Active Concrete for Coastal and Marine Infrastructure: Innovative Matrices and Designs. *In*: Allsop, W., Burgess, K. (Eds.), From Sea to Shore – Meeting the Challenges of the Sea. ICE Publishing, pp. 1139–1149.

Perkol-Finkel, S., and I. Sella. 2015. Harnessing urban coastal infrastructure for ecological enhancement. Proceedings of the Institution of Civil Engineers. Maritime Engineering 168: 102-110.

Perlmutter, A. 1971. Ecological studies related to the proposed increase in generating capacity at the Astoria Power Station of Consolidated Edison. Report prepared for the Consolidated Edison Company of New York, Inc.

Pickering, H., and D. Whitmarsh. 1997. Artificial reefs and fisheries exploitation: a review of the 'attraction versus production' debate, the influence of design and its significance for policy. Fisheries Research 31: 39-59.

Port Authority of New York and New Jersey (PANYNJ). 2015. Floating Structures Pilot Project: Fish Utilization & Responses and Hydrodynamics & Sediment Transport. Project Summary Report. July 2015.

Reid, R.N., L.M. Cargnelli, S.J. Griesbach, D.B. Packer, D.L. Johnson, C.A. Zetlin, W.W. Morse, P.L. Berrien. 1999. Essential Fish Habitat Source Document: Atlantic Herring, *Clupea harengus* Life History and Habitat Characteristics. National Marine Fisheries Service. NOAA Technical Memorandum NMFS-NE 126.

Rice, M.A. 2010. Cultured mussels of the northeast. Northeast Regional Aquaculture Center Publication No. 210-2010.

Ruben, H.J, and S.J. Morreale. 1999. Draft Biological Assessment for Sea Turtles in New York and New Jersey Harbor Complex. Unpublished Biological Assessment submitted to National Marine Fisheries Service.

SeArc Ecological Marine Consulting, Ltd (SeArc). 2015. Adjacent Artificial Habitat Survey Report Tottenville, Southern Waterfront. Prepared for the Governor's Office of Storm Recovery. December 9, 2015.

Sella, I., and S. Perkol-Finkel. 2015. Blue is the new green – Ecological enhancement of concrete based coastal and marine infrastructure. Ecological Engineering 84: 260-272.

Shortnose Sturgeon Status Review Team (SSSRT). 2010. A Biological Assessment of shortnose sturgeon (*Acipenser brevirostrum*). Report to National Marine Fisheries Service, Northeast Regional Office. November 1, 2010.

Smith, C.L. 1985. The Inland Fishes of New York State. The New York State Department of Environmental Conservation.

Smithsonian Marine Station at Fort Pierce (SMS). 2002. Indian River Lagoon Species Inventory: Oyster Reef Habitats. Available https://www.sms.si.edu/IRLSpec/Oyster_reef.htm. June 23, 2002.

Smithsonian Marine Station at Fort Pierce (SMS). 2008. Indian River Lagoon Species Inventory: Bay Anchovy. Available https://www.sms.si.edu/irlspec/Anchoa_mitchilli.htm. October 1, 2008.

Southeast Fisheries Science Center (SEFSC). 2012. SEDAR 28 Stock Assessment Report, South Atlantic Spanish Mackerel. December 2012.

Stanley, J.G., and R. DeWitt. 1983. Species profiles: life histories and environmental requirements of coastal fishes and invertebrates (North Atlantic) – hard clam. U.S. Fish and Wildlife Service FWS/OBS-82/11.18. U.S. Army Corps of Engineers, TR EL-82-4, 19 pp.

Stegemann, E.C. 2012. New York's Sturgeon. New York State Department of Environmental Conservation, Division of Fish, Wildlife and Marine Resources. http://www.dec.ny.gov/animals/7025.html.

Steimle, F.W., and J. Caracciolo-Ward. 1989. A reassessment of the status of the benthic macrofauna of the Raritan Estuary. Estuaries 12:145-156.

Steimle, F.W., C.A. Zetlin, P.L. Berrien, and S. Chang. 1999a. Essential Fish Habitat Source Document: Black Sea Bass, *Centropristis striata* Life History and Habitat Characteristics. National Marine Fisheries Service. NOAA Technical Memorandum NMFS-NE 143.

Steimle, F.W., W.W. Morse, P.L. Berrien, and D.L. Johnson. 1999b. Essential Fish Habitat Source Document: Red Hake, *Urophycis chuss* Life History and Habitat Characteristics. National Marine Fisheries Service. NOAA Technical Memorandum NMFS-NE 133.

Steimle, F.W., C.A. Zetlin, P.L. Berrien, D.L. Johnson, and S. Chang. 1999c. Essential Fish Habitat Source Document: Scup, *Stenotomus chrysops* Life History and Habitat Characteristics. National Marine Fisheries Service. NOAA Technical Memorandum NMFS-NE 149.

Steimle, F.W., R.A. Pikanowski, D.G. McMillan, C.A. Zetlin, and S.J. Wilk. 2000. Demersal fish and American lobster diets in the Lower Hudson-Raritan Estuary. NOAA Technical Memorandum NMFS-NE-161. Woods Hole, MA. 106 pp.

Stephens, J., and D. Pondella. 2002. Larval productivity of a mature artificial reef: the ichthyoplankton of King Harbor, California, 1974-1997. ICES Journal of Marine Science 59: S51-S58.

Stepien, J.C., T.C. Malone, and M.B. Chervin. 1981. Copepod communities in the estuary and coastal plume of the Hudson River. Estuarine, Coastal and Shelf Science 13:185-194. 1981.

Studholme, A.L., D.B. Packer, P.L. Berrien, D.L. Johnson, C.A. Zetlin, and W.W. Morse. 1999. Essential Fish Habitat Source Document: Atlantic Mackerel, *Scomber scombrus* Life History and Habitat Characteristics. National Marine Fisheries Service. NOAA Technical Memorandum NMFS-NE 141.

United States Army Corps of Engineers (USACE). 1986. Sampling Fisheries Resources as Murrells Inlet, South Carolina. Coastal Engineering Technical Note. December 1986.

United States Army Corps of Engineers (USACE). 1999. New York and New Jersey Harbor Navigation Study. Draft Environmental Impact Statement.

United States Army Corps of Engineers (USACE). 2000. Memorandum for the Record: Statement of Findings and Environmental Assessment for Application Number 1998-00290-Y3 by the Hudson River Park Trust. CENAN-OP-RE.

United States Army Corps of Engineers (USACE). 2001 Beach Renourishment and Offshore Borrowing in the Raritan Bay Ecosystem: A Biological Assessment for Sea Turtles.

United States Army Corps of Engineers (USACE). 2004. Hudson-Raritan Estuary Environmental Restoration Feasibility Study: Lower Bay Study Area Report. New York District. June 2004.

United States Army Corps of Engineers (USACE). 2009. Delaware River main stem and channel deepening project. Draft Essential Fish Habitat evaluation. February 2009.

United States Army Corps of Engineers (USACE). 2014. Waterborne Commerce of the United States, Calendar Year 2014, Part 1 – Waterways and Harbors Atlantic Coast. Institute for Water Resources, Department of the Army Corps of Engineers. IWR-WCUS-14-1. 273 pp.

United States Environmental Protection Agency (USEPA). 1986. Quality Criteria for Water. EPA 440/5-86-001.

United States Fish and Wildlife Service (USFWS). 1997. Significant habitat complexes of the New York Bight watershed, Raritan Bay and Sandy Hook Bay Complex. U.S. Fish and Wildlife Service, Southern New England—New York Bight Coastal Ecosystems Program, Charlestown, RI. Available: http://nctc.fws.gov/resources/knowledge-resources/pubs5/web_link/text/rb_form.htm#Raritan Bay—Sandy Hook Bay Complex

United States Geological Society (USGS). 2015. Geologic History of Raritan Bay. Available http://3dparks.wr.usgs.gov/nyc/moraines/raritanbay.htm.

Van Dolah, R.F., D.M. Knott, and D.R. Calder. 1984. Ecological Effects of Rubble Weir Jetty Construction at Murrells Inlet, South Carolina, Volume I: Colonization and Community Development on New Jetties. South Carolina Wildlife and Marine Resources Department, Technical Report EL-84-4. April 1984.

Vogel, S. 1994. Life in Moving Fluids: The Physical Biology of Flow, 2nd Edition. Princeton University Press, Princeton, New Jersey. 467 pp.

Walford, L.A. 1971. Review of aquatic resources and hydrographic characteristics of Raritan, Lower New York and Sandy Hook Bays. Report for Battelle Memorial Institute by Sandy Hook Sport Fisheries Marine Lab NMFS, 80 pp.

Wang, S.B., and E.D. Houde. 1995. Distribution, relative abundance, biomass and production of bay anchovy *Anchoa mitchilli* in the Chesapeake Bay. Marine Ecology Progress Series 121: 27-38.

Wilber, D.H., and D.G. Clarke. 2001. Biological effects of suspended sediments: a review of suspended sediment impacts on fish and shellfish with relation to dredging activities in estuaries. North American Journal of Fisheries Management 21: 855-875.

Woodhead, P.M. 1990. The Fish Community of New York Harbor: Spatial and temporal Distribution of major Species. Report to the New York - New Jersey Harbor Estuary Program, New York, NY.

Zagata, C., C. Young, J. Sountis, and M. Kuehl. 2008. Mytilus edulis. Available at http://animaldiversity.org/accounts/Mytilus_edulis/

✷

Appendix E-12
Essential Fish Habitat

Figures

11/20/2017

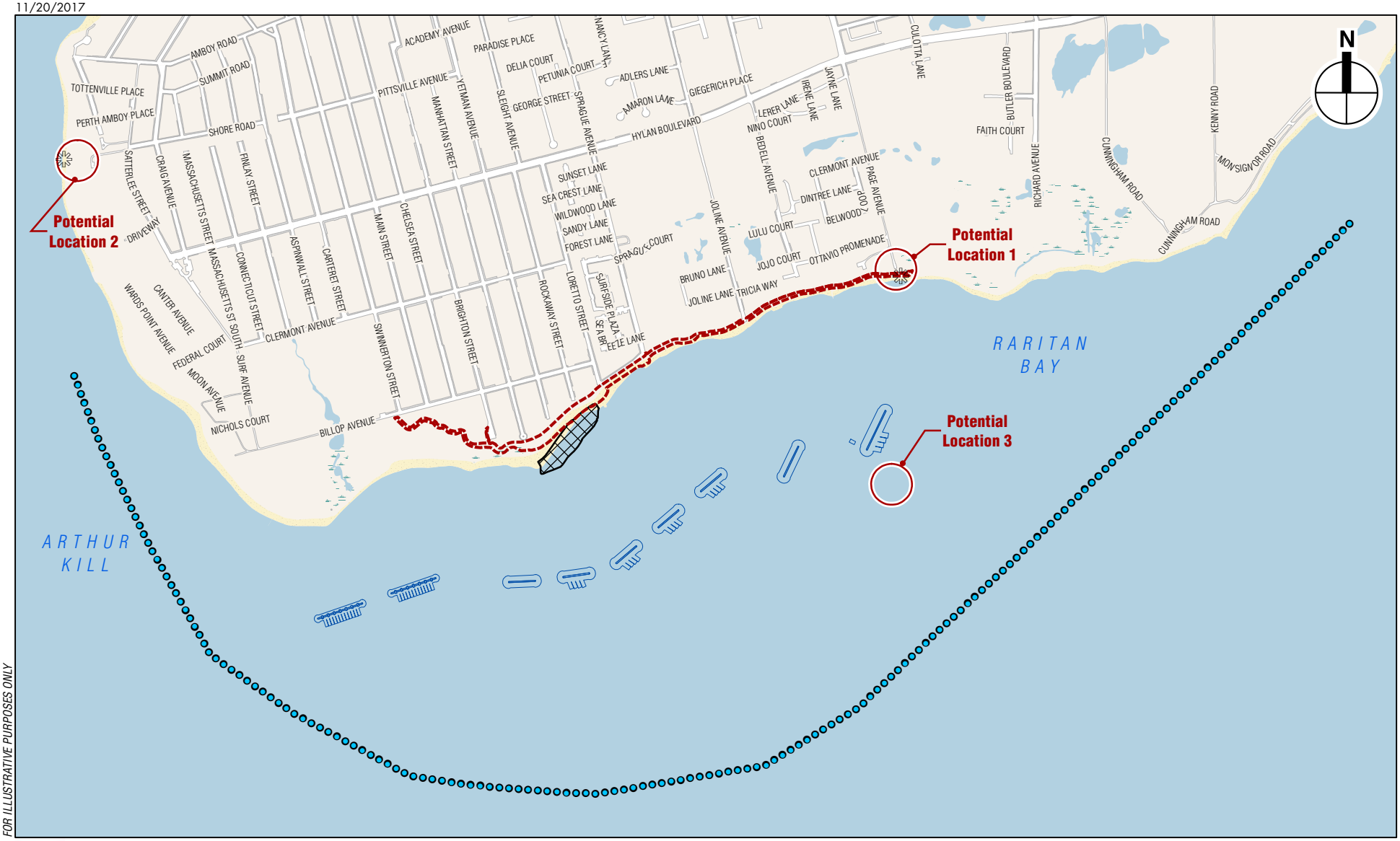

FOR ILLUSTRATIVE PURPOSES ONLY

Proposed Breakwater Features

Proposed Shoreline Restoration Area

Proposed Shoreline Project Elements

Potential Location of Proposed Water Hub (exact location to be determined)

Proposed Floating Dock (associated with Water Hub Potential Locations 1 and 2 only)

Potential Water Access

Aquatic Resources Study Area (Outer Boundary)

0 2,000 FEET

Coastal and Social Resiliency Initiatives for Tottenville Shoreline
Essential Fish Habitat Assessment

Project Location
Figure 1

Components of the Proposed Breakwaters Project

Coastal and Social Resiliency Initiatives for Tottenville Shoreline

Figure 2

11.6.17

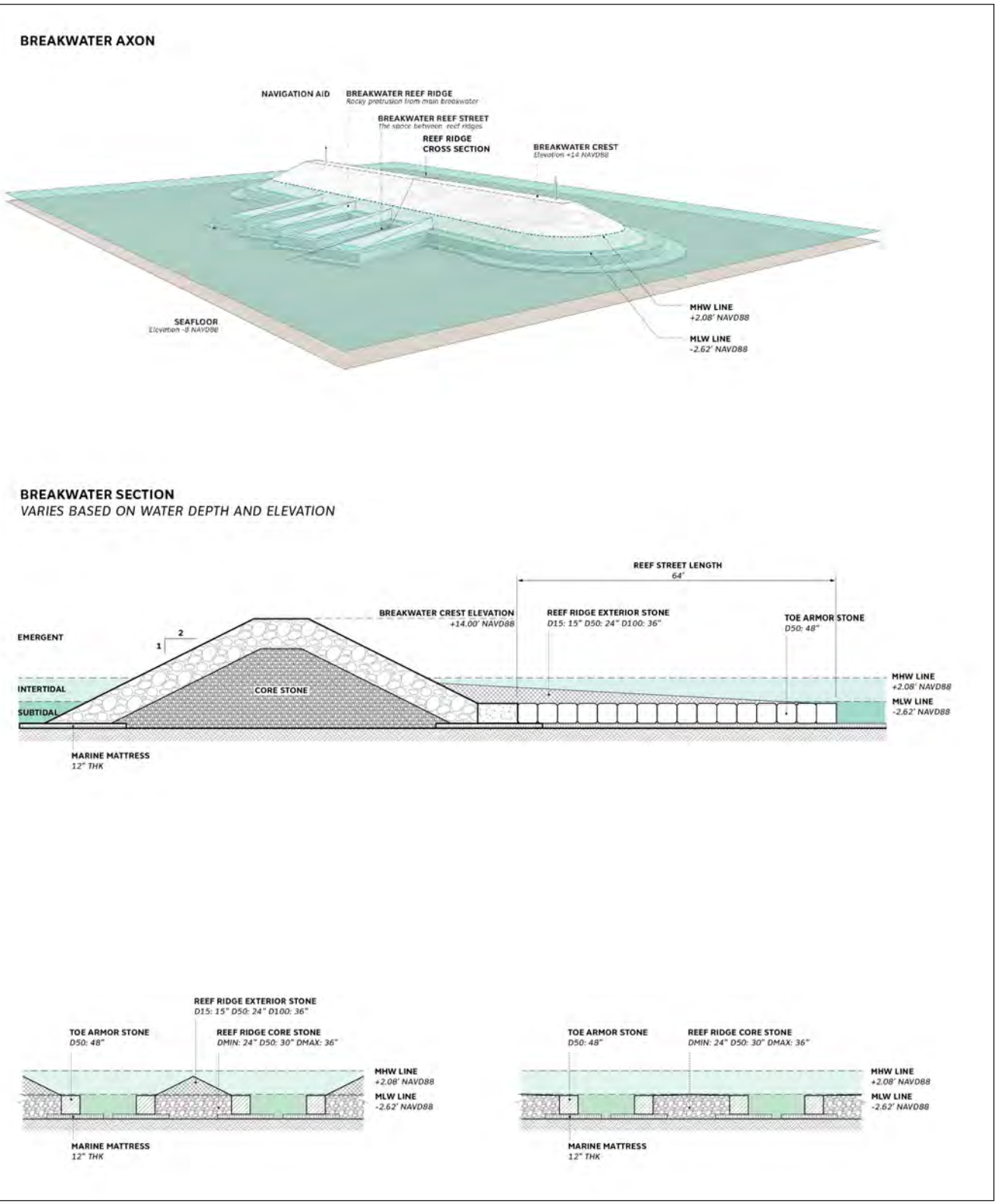

Source: *SCAPE / Landscape Architecture PLLC*

Proposed Breakwater
Reef Streets and Ridges
Figure 3

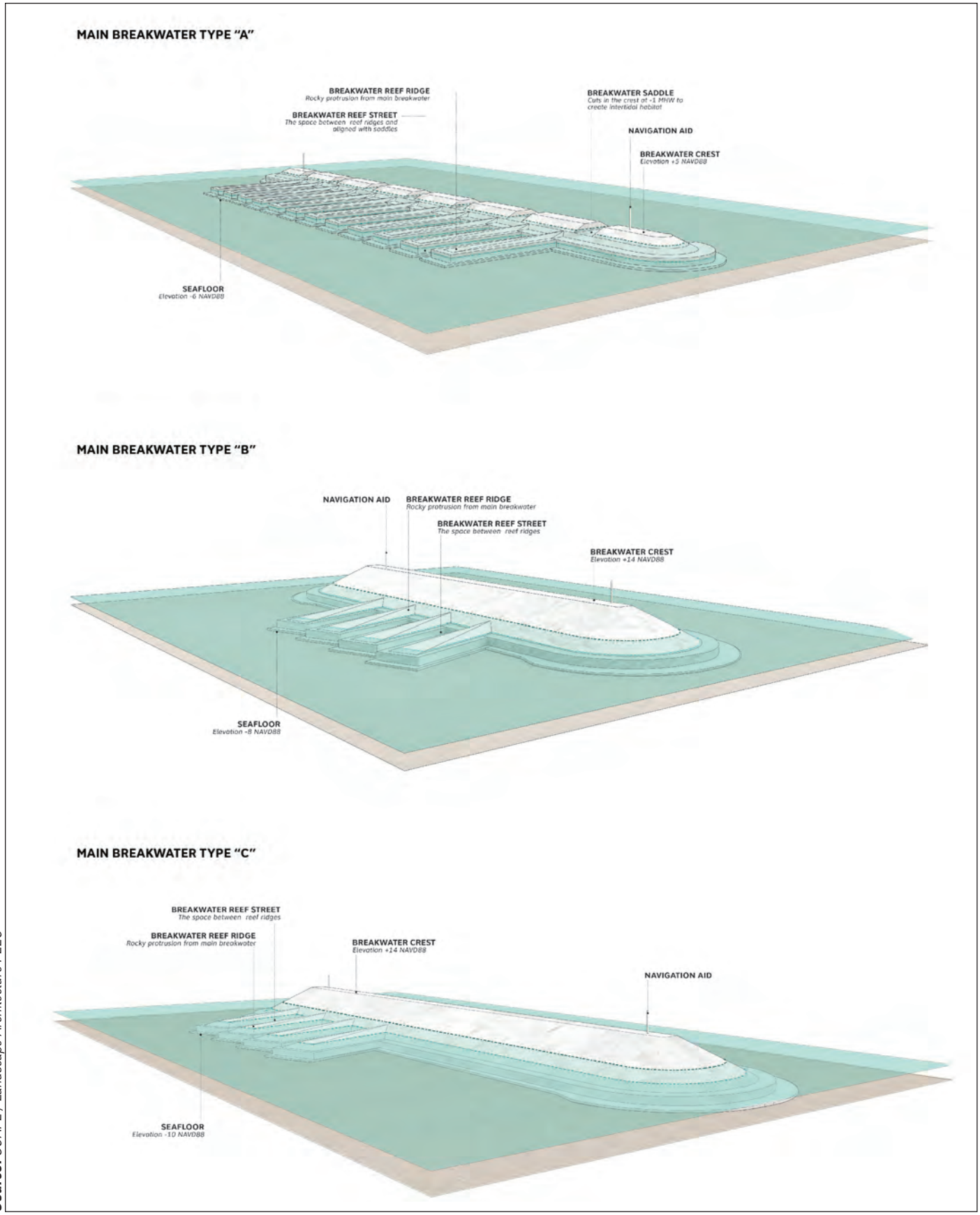

Source: *SCAPE / Landscape Architecture PLLC*

Coastal and Social Resiliency Initiatives for Tottenville Shoreline
Essential Fish Habitat Assessment

Proposed Breakwater Types
Figure 4

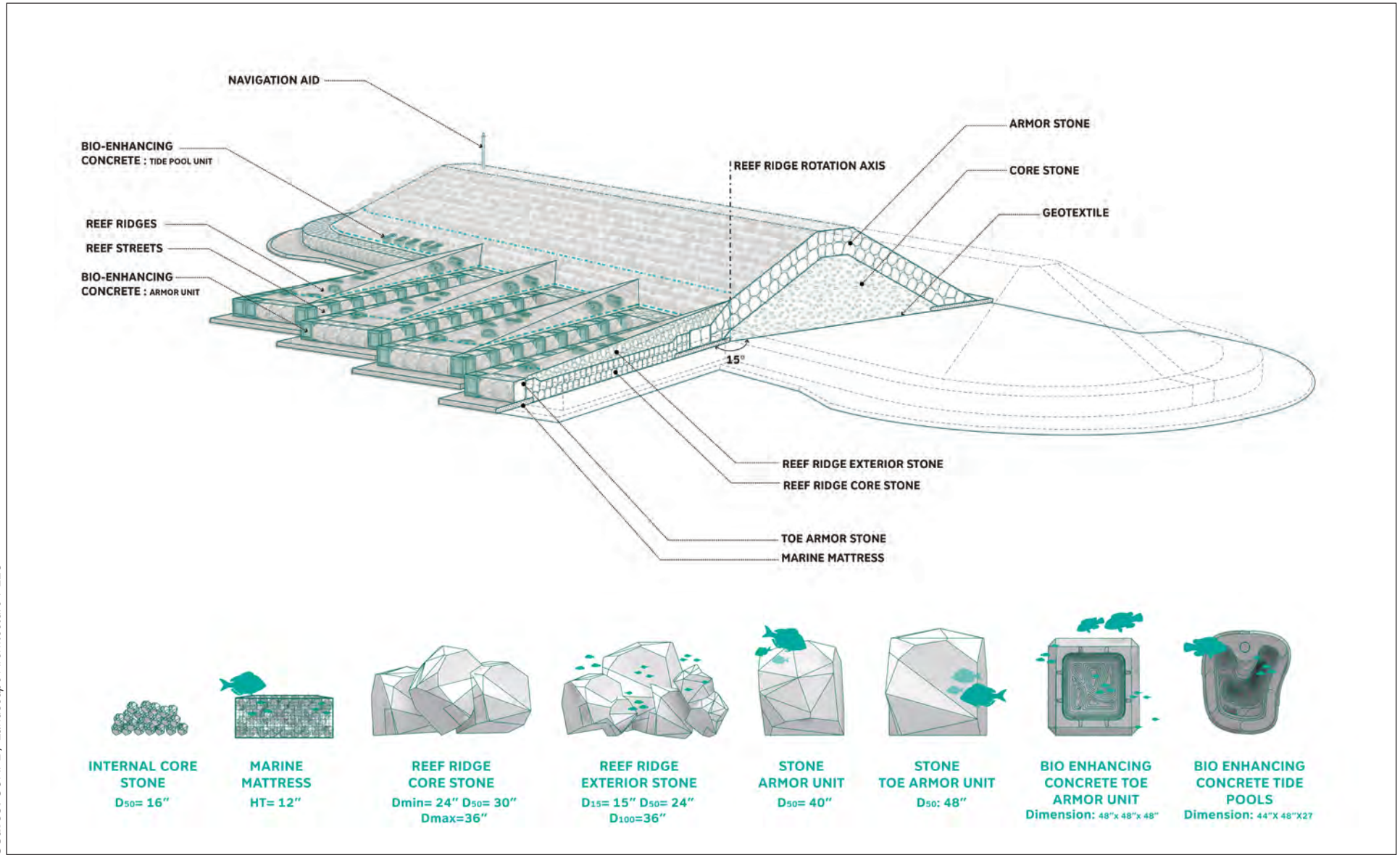

Source: *SCAPE / Landscape Architecture PLLC*

Proposed Breakwater Stone Configuration

Figure 5

Source: *Stantec / RACE Coastal Engineering*

Proposed Water Hub Location 1—
Page West Option

Figure 6

Source: *Stantec / RACE Coastal Engineering*

Proposed Water Hub Location 1—
Page East Option

Figure 7

11.6.17

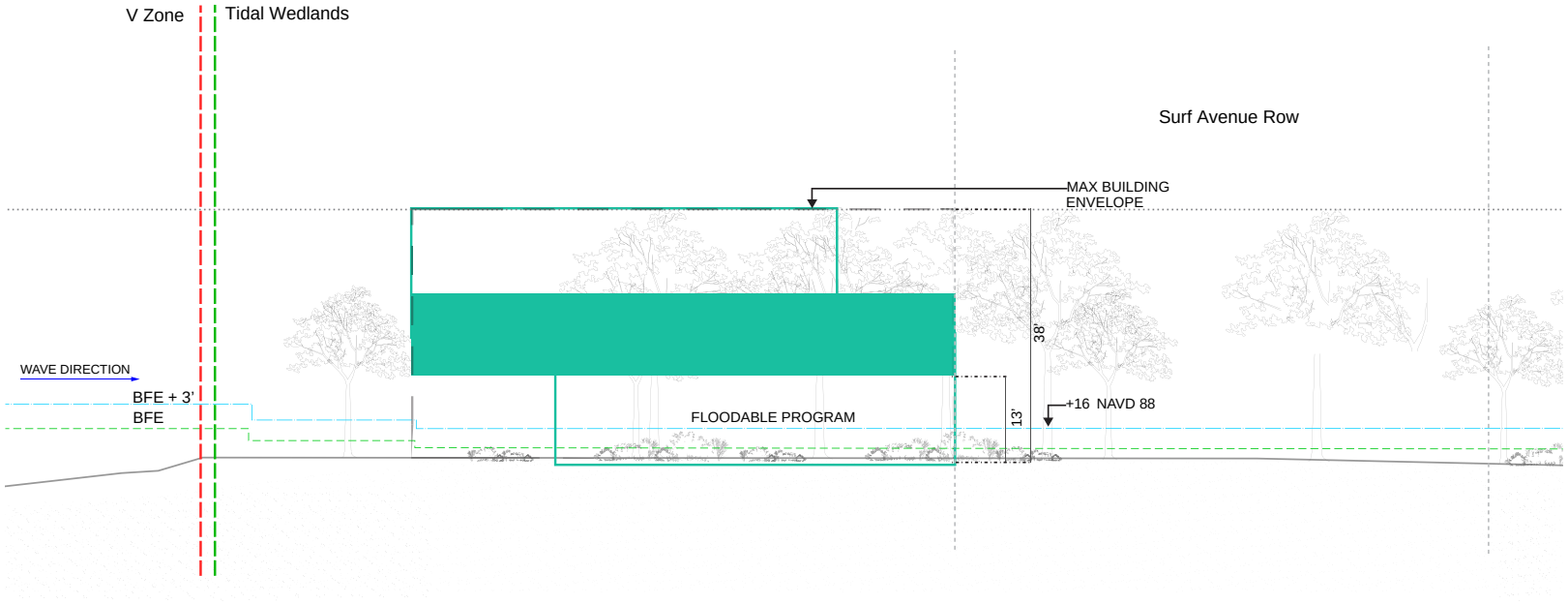

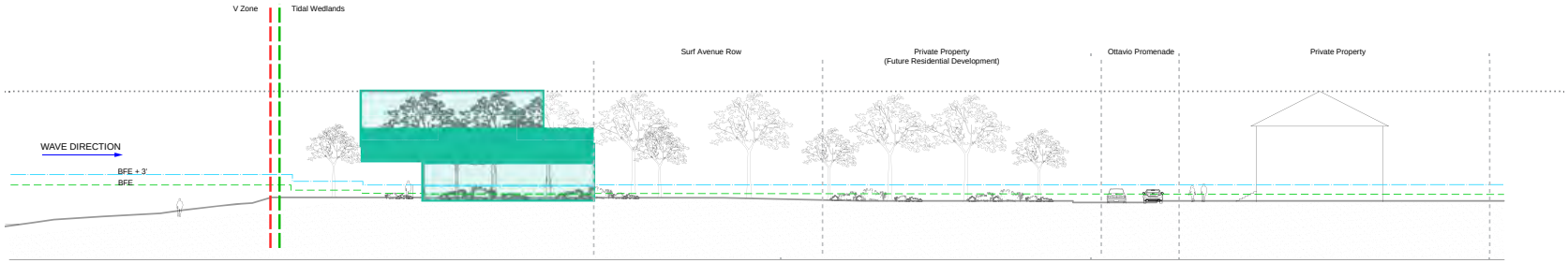

FOR ILLUSTRATIVE PURPOSES ONLY

Proposed Water Hub Location 1—
Page West Option Sections

Figure 8

11.6.17

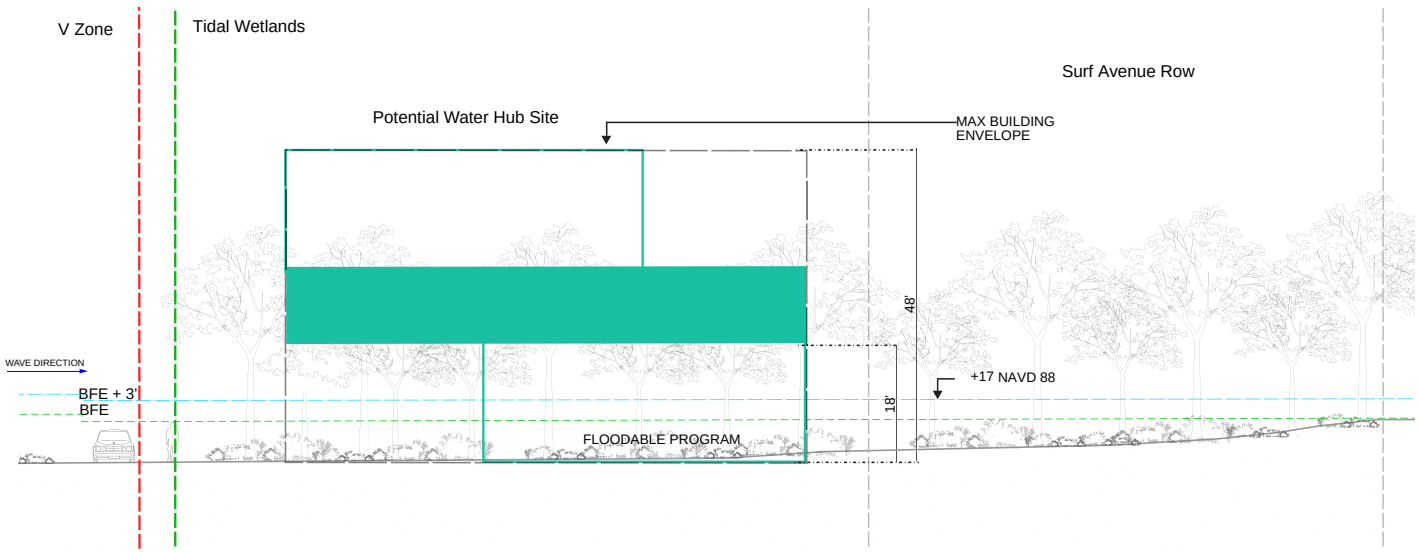

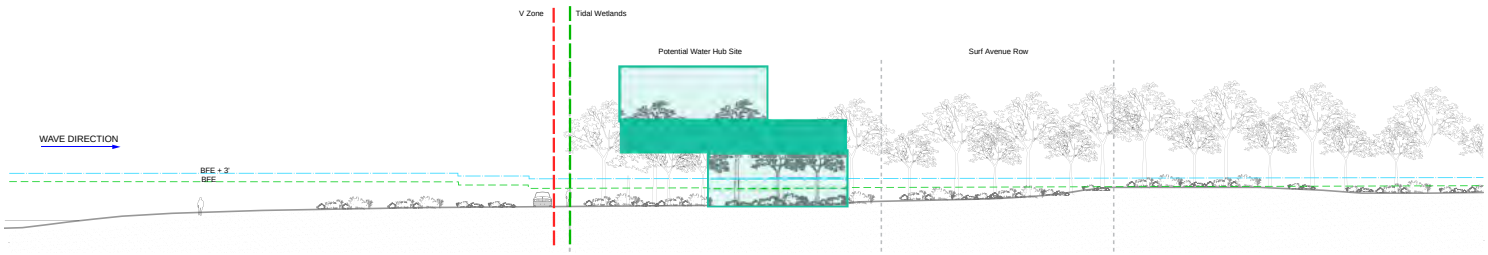

FOR ILLUSTRATIVE PURPOSES ONLY

Proposed Water Hub Location 1—
Page East Option Sections

Figure 9

11.6.17

Source: *SCAPE / Landscape Architecture PLLC*

Proposed Water Hub Location 2—
Biddle House Option

Figure 10

11.6.17

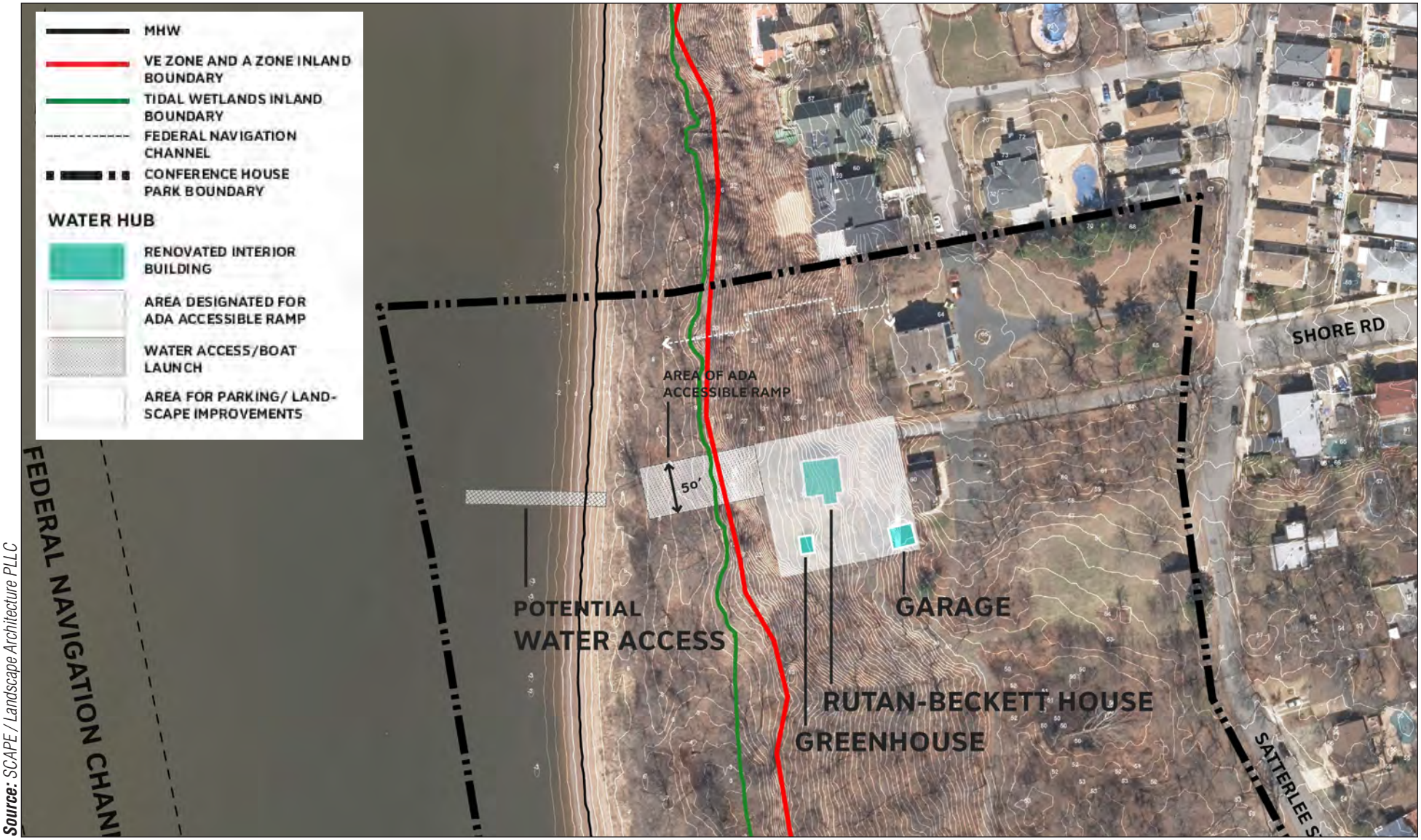

Source: *SCAPE / Landscape Architecture PLLC*

Proposed Water Hub Location 2—
Rutan-Beckett Option

Figure 11

Source: *Stantec / RACE Coastal Engineering*

Proposed Shoreline Project

Coastal and Social Resiliency Initiatives for Tottenville Shoreline

Figure 12

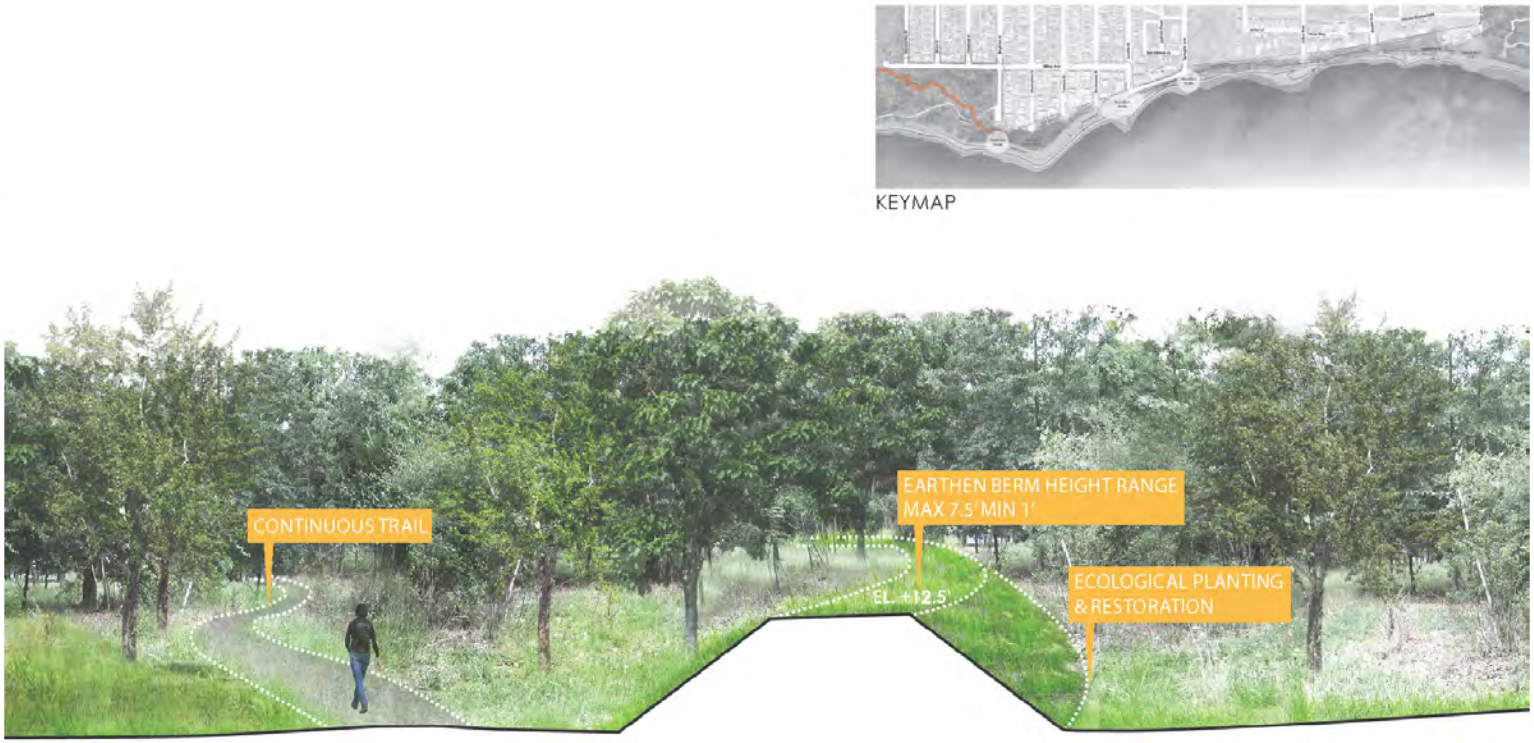

Source: Stantec / RACE Coastal Engineering

FOR ILLUSTRATIVE PURPOSES ONLY

Coastal and Social Resiliency Initiatives for Tottenville Shoreline
Essential Fish Habitat Assessment

Proposed Earthen Berm
Figure 13

Source: *Stantec / RACE Coastal Engineering*

FOR ILLUSTRATIVE PURPOSES ONLY

Proposed Hybrid Dune
Figure 14

FOR ILLUSTRATIVE PURPOSES ONLY

Proposed Eco-Revetment
Figure 15

FOR ILLUSTRATIVE PURPOSES ONLY

Coastal and Social Resiliency Initiatives for Tottenville Shoreline
Essential Fish Habitat Assessment

Proposed Raised Edge
Figure 16

11/20/2017

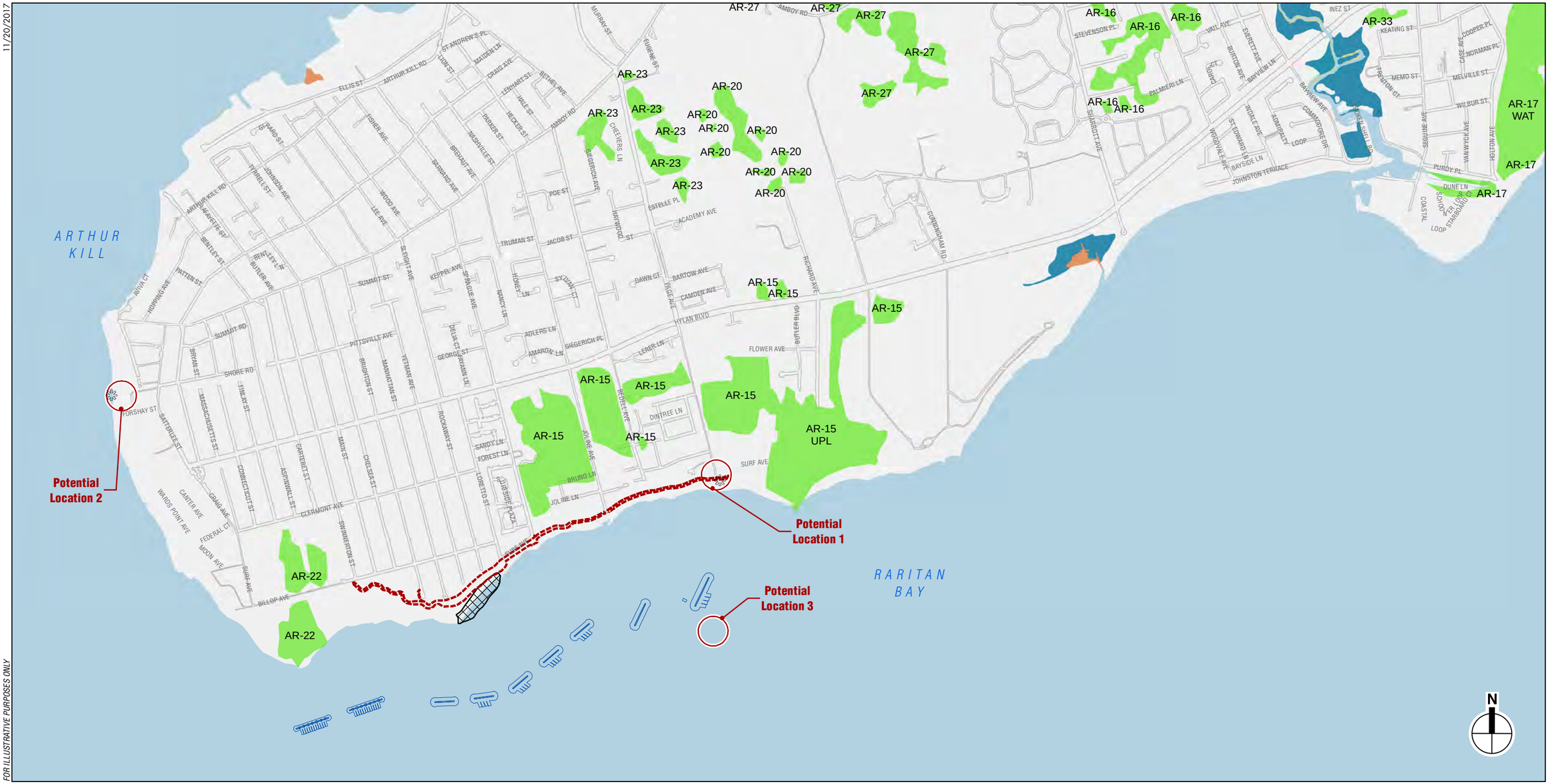

FOR ILLUSTRATIVE PURPOSES ONLY

Proposed Breakwater Features

Proposed Shoreline Restoration Area

Proposed Shoreline Project Elements

Potential Location of Proposed Water Hub (exact location to be determined)

Proposed Floating Dock (associated with Water Hub Potential Locations 1 and 2 only)

Potential Water Access

State-regulated freshwater wetlands

High Marsh

Intertidal Marsh

Littoral Zone

Coastal Shoals, Bars and Mudflats

0 2,000 FEET

Coastal and Social Resiliency Initiatives for Tottenville Shoreline
Essential Fish Habitat Assessment

NYSDEC Freshwater and Tidal Wetlands
Figure 17

12/13/2017

FOR ILLUSTRATIVE PURPOSES ONLY

Delineated Tidal Wetland

Proposed Shoreline Restoration Area

Earthen Berm

Eco-Revetment

Hybrid Dune/Reventment System

0 100 FEET

Delineated Tidal Wetland

Coastal and Social Resiliency Initiatives for Tottenville Shoreline

Figure 18

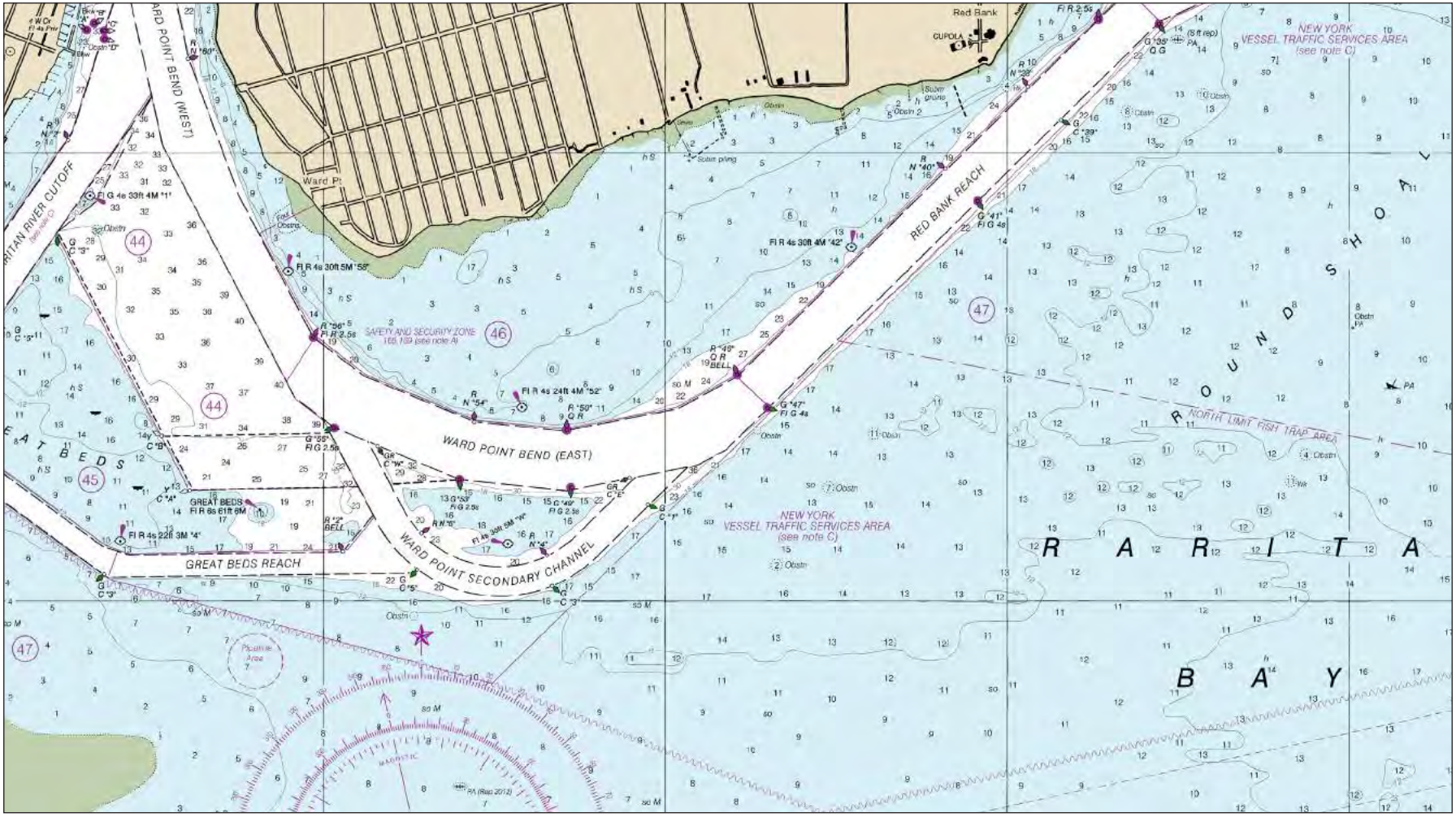

NOAA Nautical Chart 12331

Coastal and Social Resiliency Initiatives for Tottenville Shoreline
Essential Fish Habitat Assessment

Figure 19

11/20/2017

FOR ILLUSTRATIVE PURPOSES ONLY

Proposed Breakwater Features

Proposed Shoreline Restoration Area

Proposed Shoreline Project Elements

Potential Location of Proposed Water Hub (exact location to be determined)

Proposed Floating Dock (associated with Water Hub Potential Locations 1 and 2 only)

6 Ft. Depth Line (mlw)

Potential Water Access

0 2,000 FEET

Coastal and Social Resiliency Initiatives for Tottenville Shoreline
Essential Fish Habitat Assessment

Bathymetry
Figure 20

11/20/2017

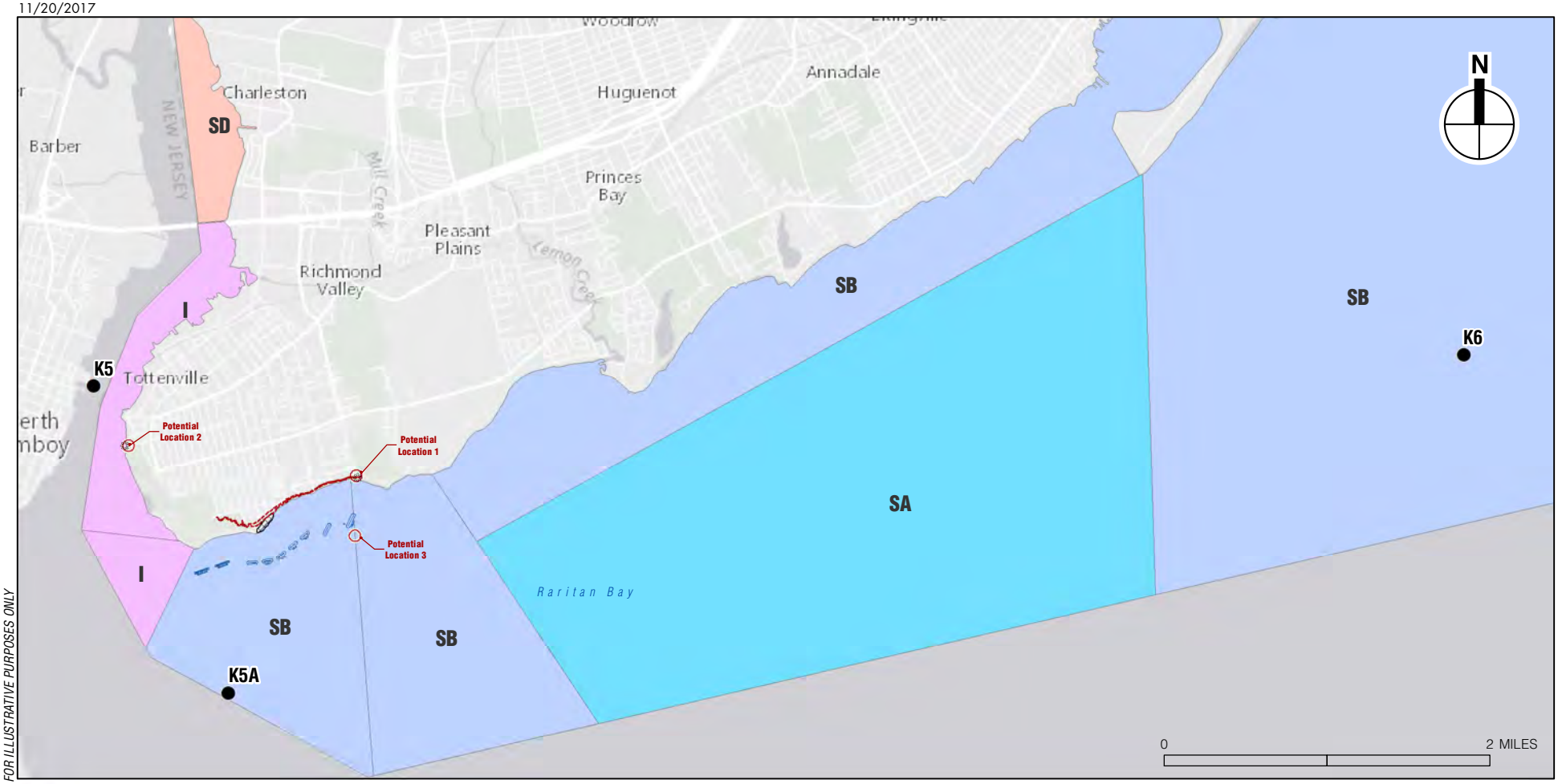

FOR ILLUSTRATIVE PURPOSES ONLY

Proposed Breakwater Features

Proposed Shoreline Restoration Area

Proposed Shoreline Project Elements

Potential Location of Proposed Water Hub (exact location to be determined)

Potential Water Access

Proposed Floating Dock (associated with Water Hub Potential Locations 1 and 2 only)

The best usages of **Class SA** waters are shellfishing for market purposes, primary and secondary contact recreation and fishing. These waters shall be suitable for fish, shellfish, and wildlife propagation and survival.

The best usages of **Class SB** waters are primary and secondary contact recreation and fishing. These waters shall be suitable for fish, shellfish, and wildlife propagation and survival.

The best usages of **Class I** waters are secondary contact recreation and fishing. These waters shall be suitable for fish, shellfish, and wildlife propagation and survival.

The best usage of **Class SD** waters is fishing. These waters shall be suitable for fish, shellfish, and wildlife survival. This classification may be given to those waters that, because of natural or man-made conditions, cannot meet the requirements for primary and secondary contact recreation and fish propagation.

Coastal and Social Resiliency Initiatives for Tottenville Shoreline
Essential Fish Habitat Assessment

New York City Harbor Survey Monitoring Locations and NYSDEC Surface Water Classifications in Raritan Bay

Figure 21

12.12.17

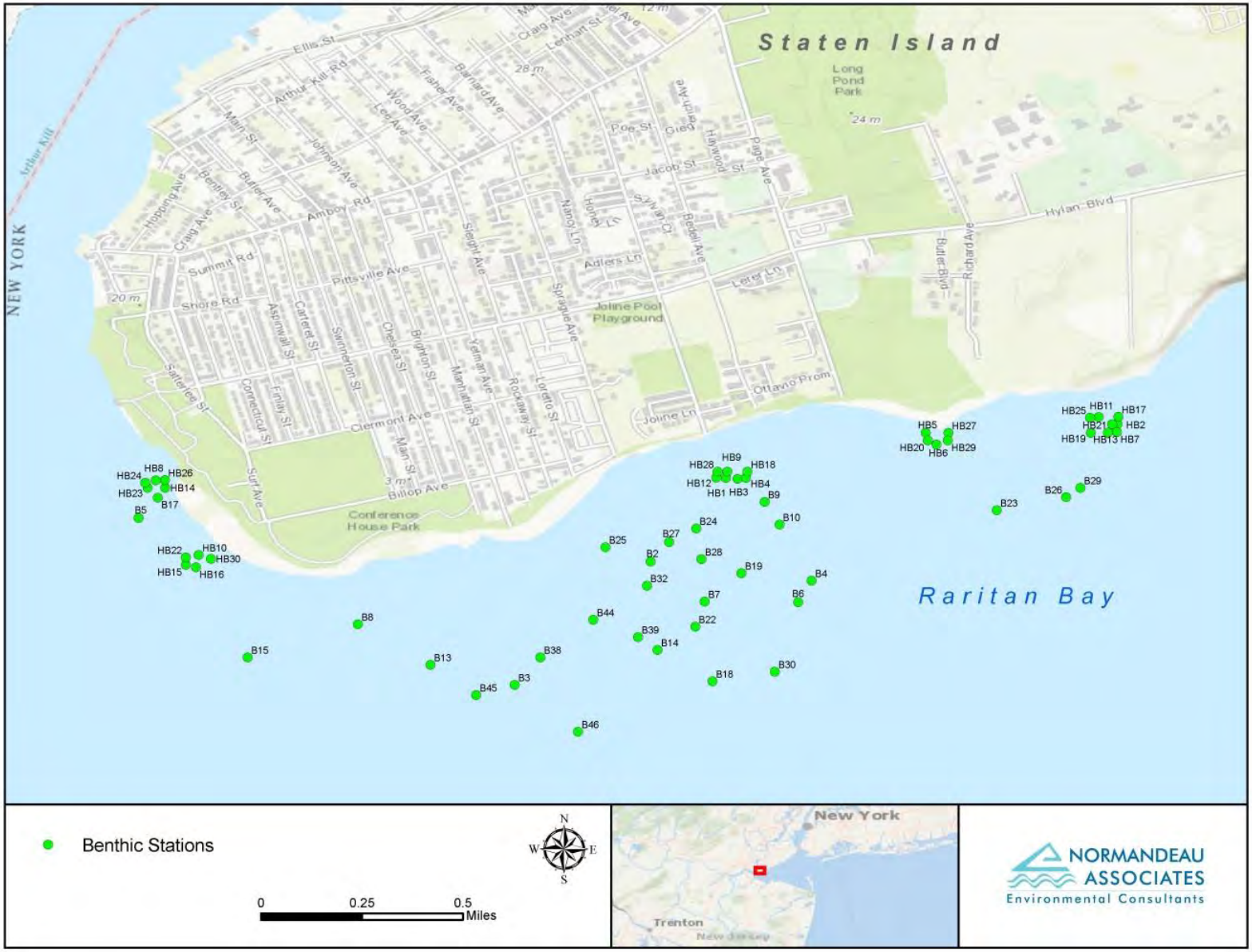

Source: Normandeau Associates, Inc.

Location of Benthic and Water Quality Sampling Stations
June 2015

Figure 22a

12.12.17

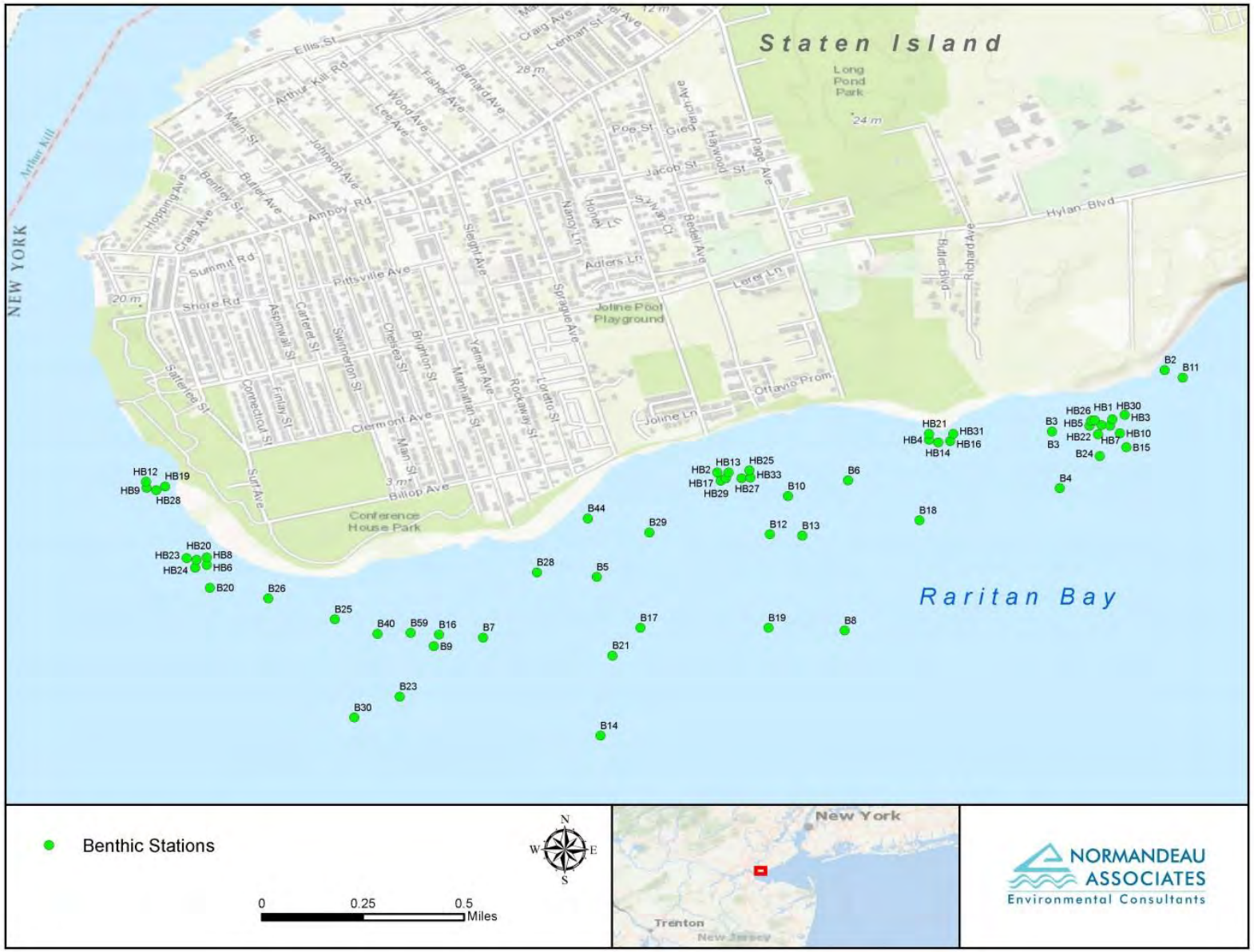

Source: *Normandeau Associates, Inc.*

Location of Benthic and Water Quality Sampling Stations
September 2015

Figure 22b

12.12.17

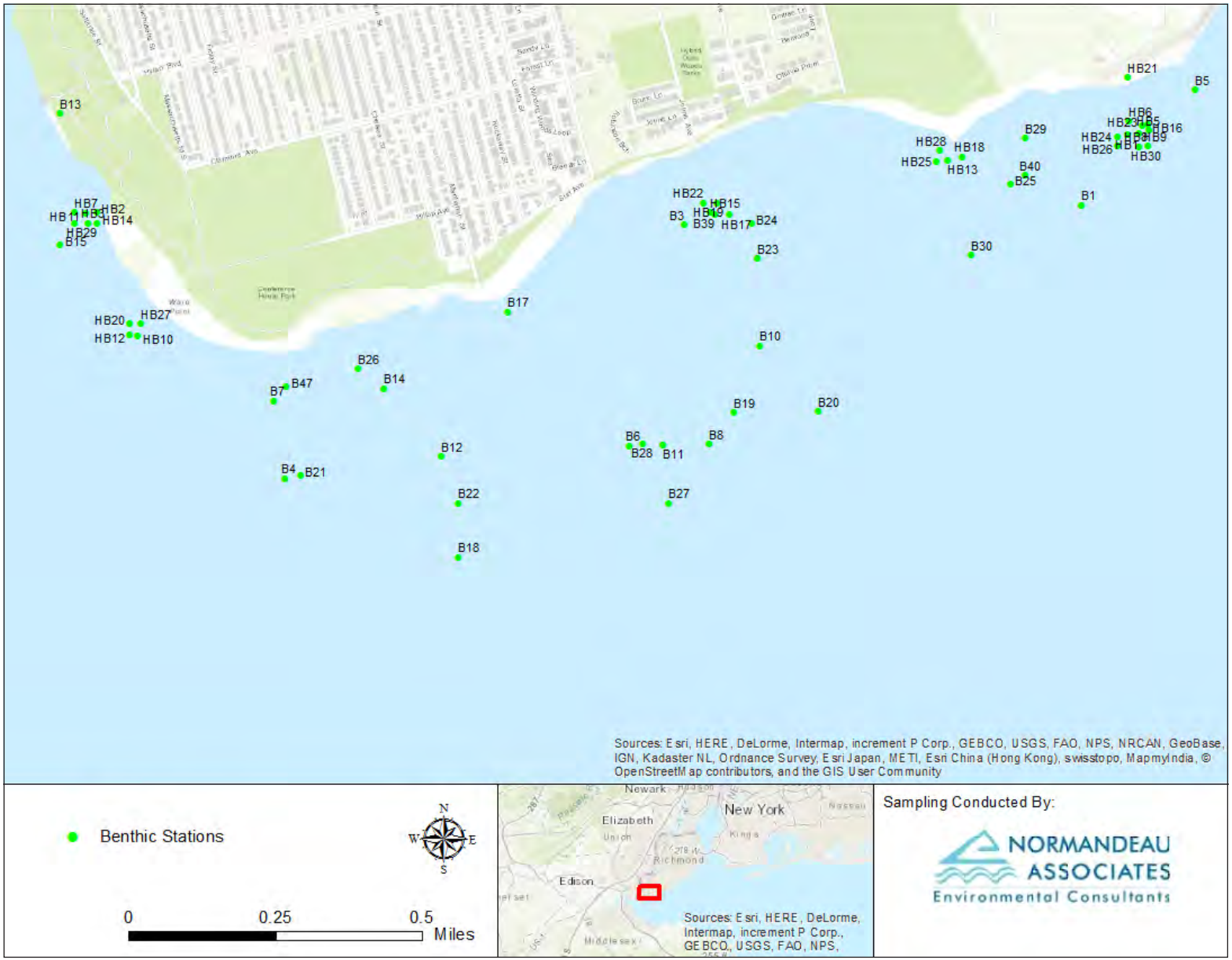

Benthic Stations

N
W E
S

0 0.25 0.5 Miles

Sampling Conducted By:

NORMANDEAU ASSOCIATES
Environmental Consultants

Source: AKRF

Location of Benthic and Water Quality Sampling Stations
June 2017
Figure 22c

12.12.17

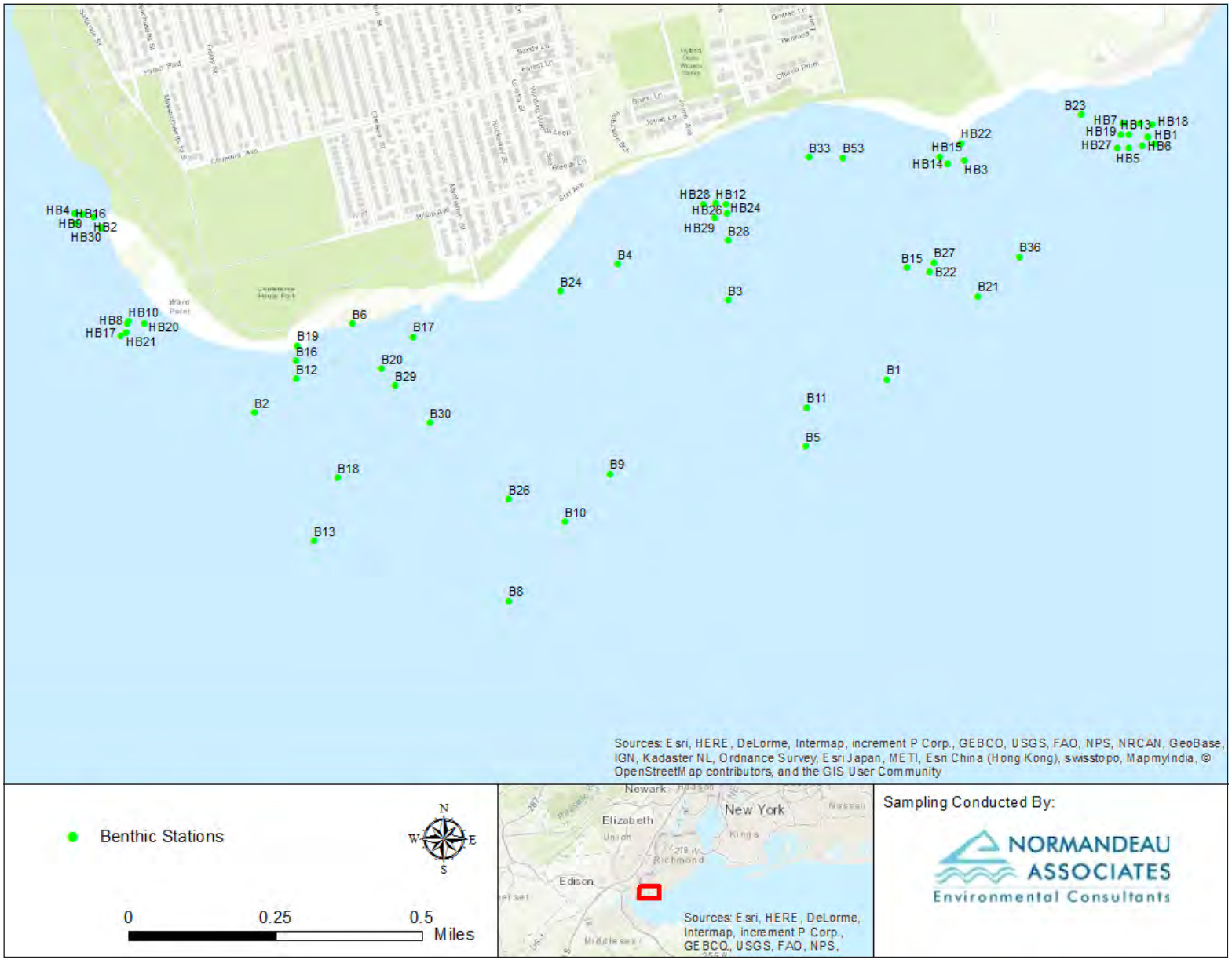

Source: AKRF

Location of Benthic and Water Quality Sampling Stations
September 2017
Figure 22d

12.1.17

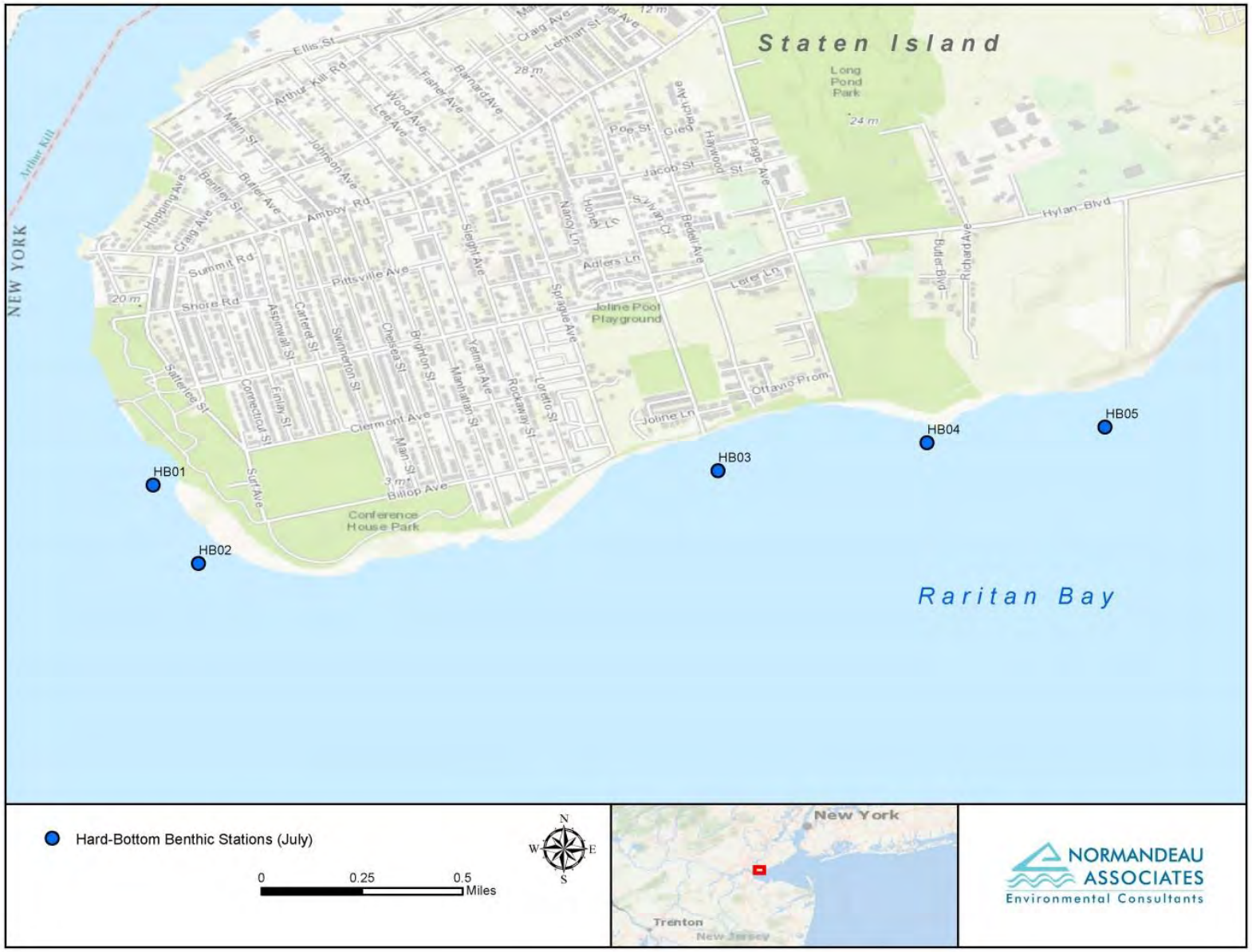

Source: *Normandeau Associates, Inc.*

Hard Bottom Sampling Locations
July 2015
Figure 23a

12.1.17

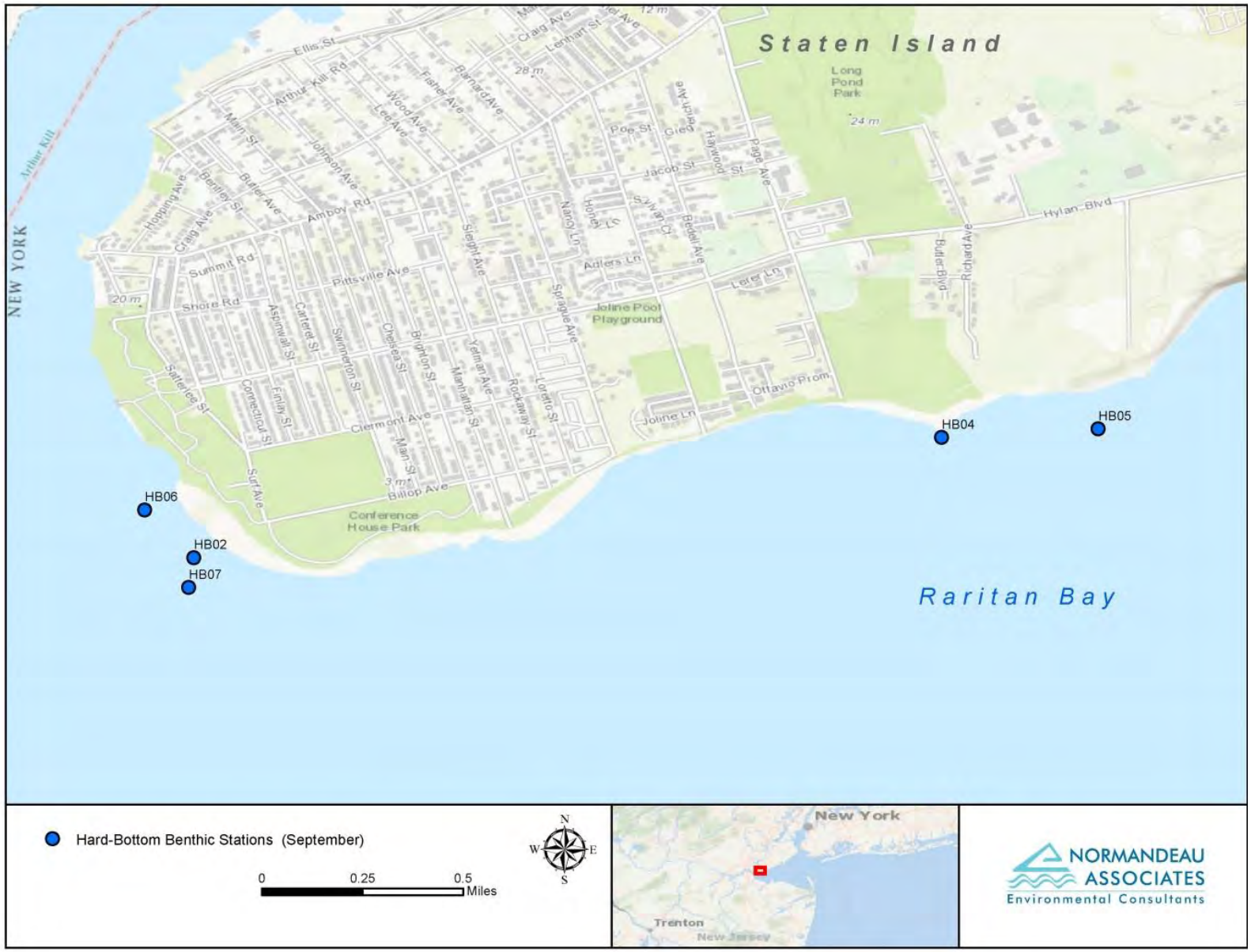

Source: *Normandeau Associates, Inc.*

Hard Bottom Sampling Locations
September 2015

Figure 23b

5/22/2018

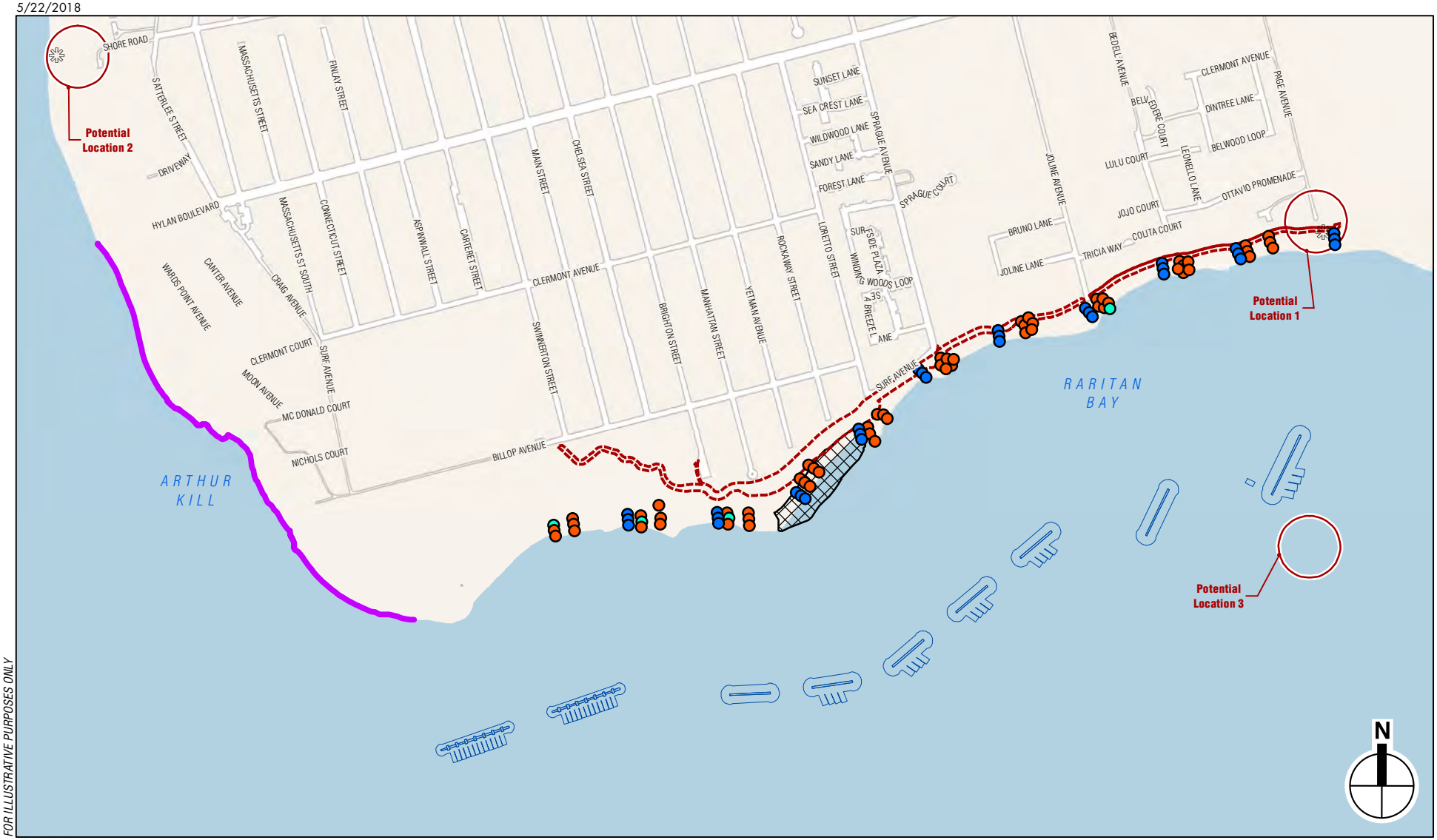

FOR ILLUSTRATIVE PURPOSES ONLY

Proposed Breakwater Features

Proposed Shoreline Restoration Area

Proposed Floating Dock (associated with Water Hub Potential Locations 1 and 2 only)

Proposed Shoreline Project Elements

Potential Location of Proposed Water Hub (exact location to be determined)

Potential Water Access

Sampling Locations (June 7 and June 10, 2017)

Eggs Found

No Eggs Found

Visual Survey of Spawning Pairs (June 7, 2017)

Sampling Locations (June 2015)

0 1,000 FEET

Coastal and Social Resiliency Initiatives for Tottenville Shoreline
Essential Fish Habitat Assessment

Horseshoe Crab Survey
June 2015 and June 2017
Figure 24

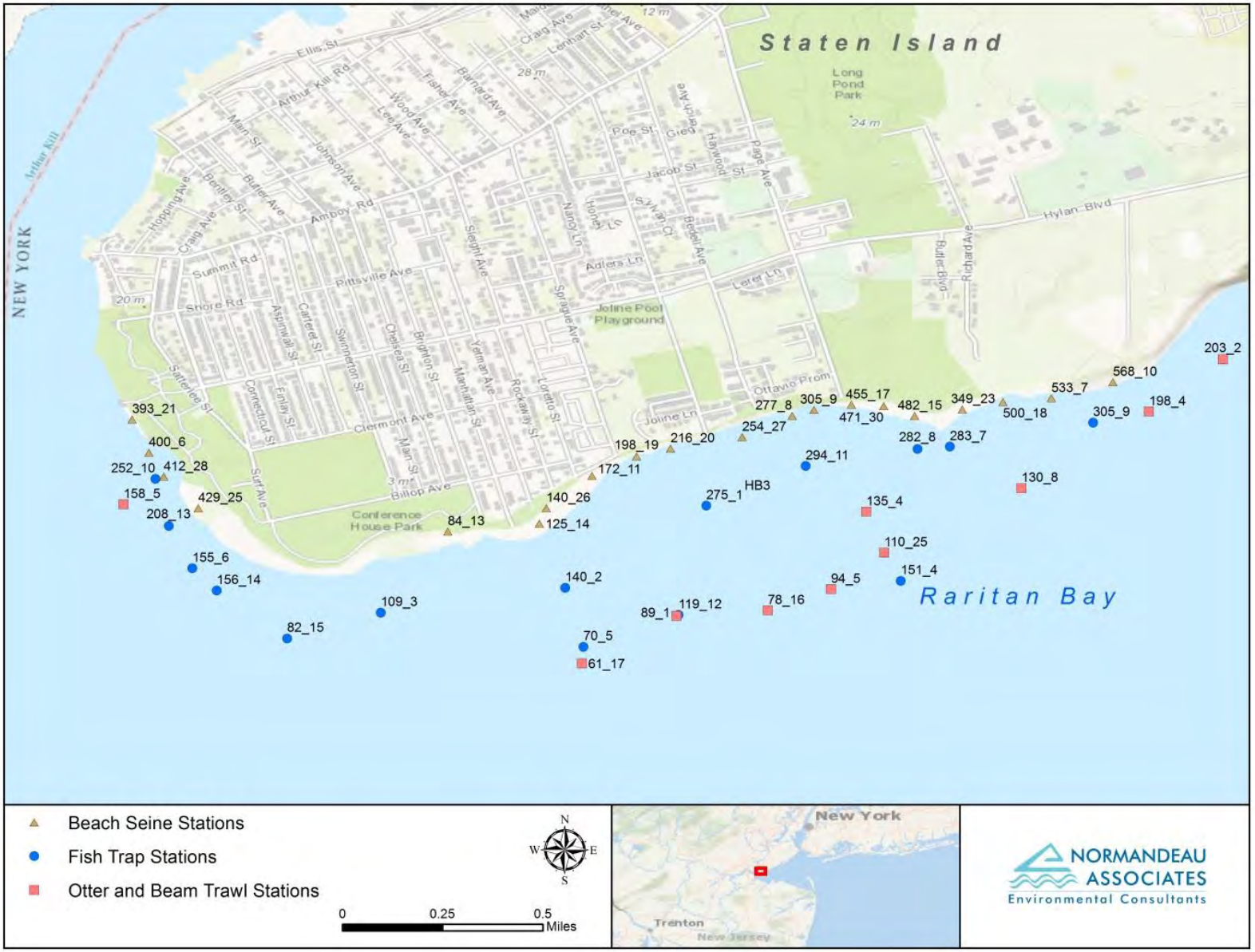

Source: Normandeau Associates, Inc.

Location of Fish Sampling Stations
June 2015

Figure 25a

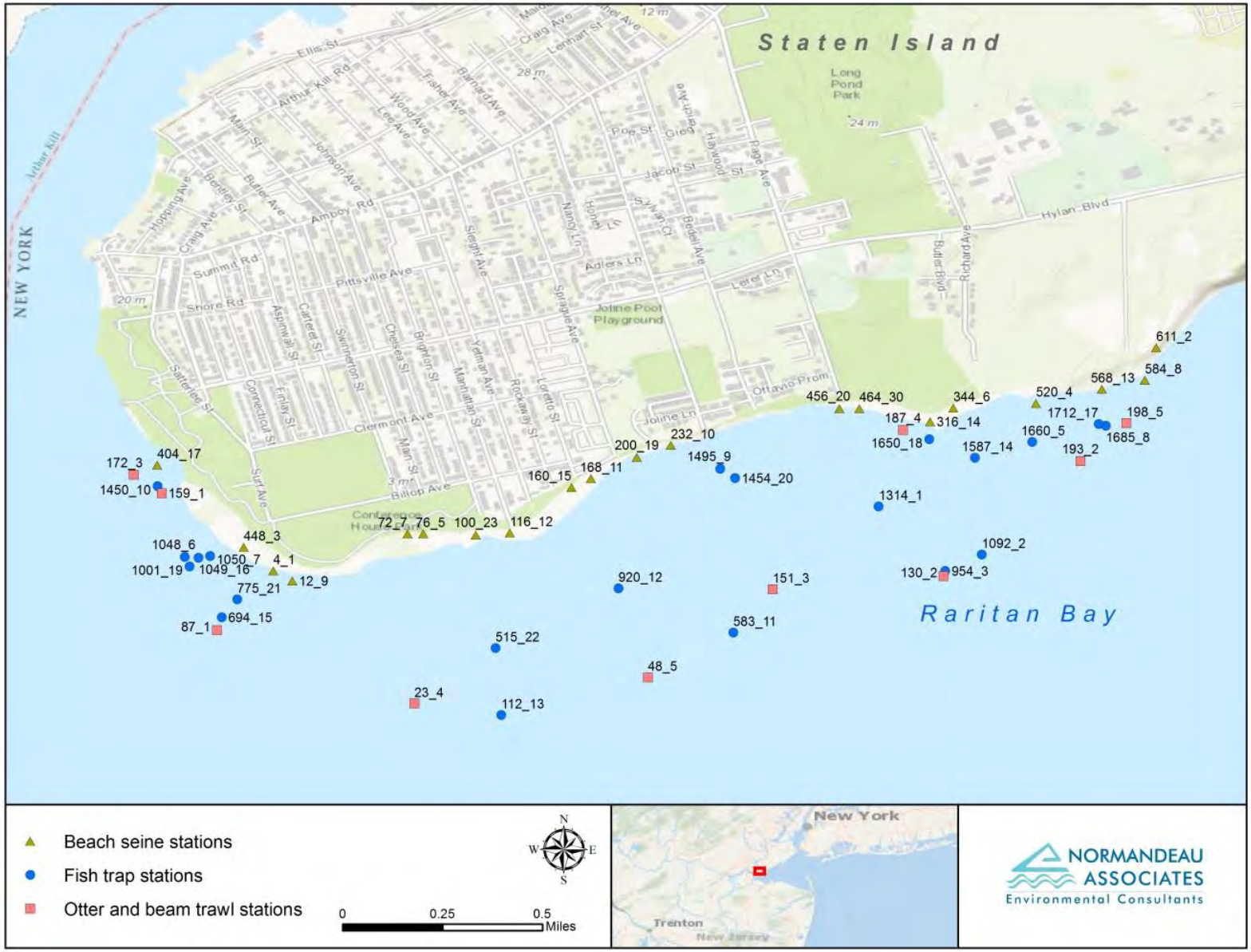

Source: Normandeau Associates, Inc.

Location of Fish Sampling Stations
July 2015

Figure 25b

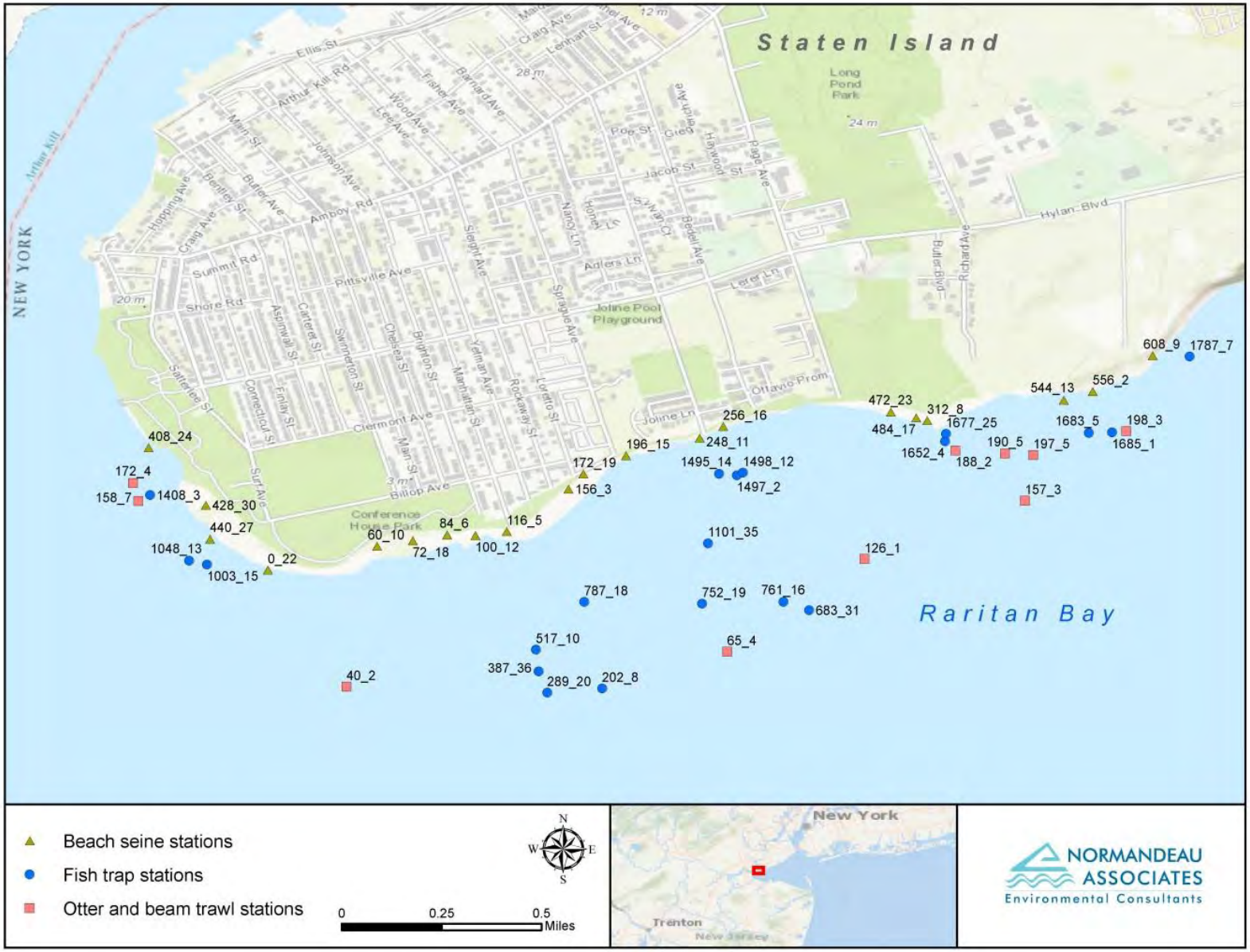

Source: Normandeau Associates, Inc.

Location of Fish Sampling Stations
September 2015

Figure 25c

12.12.17

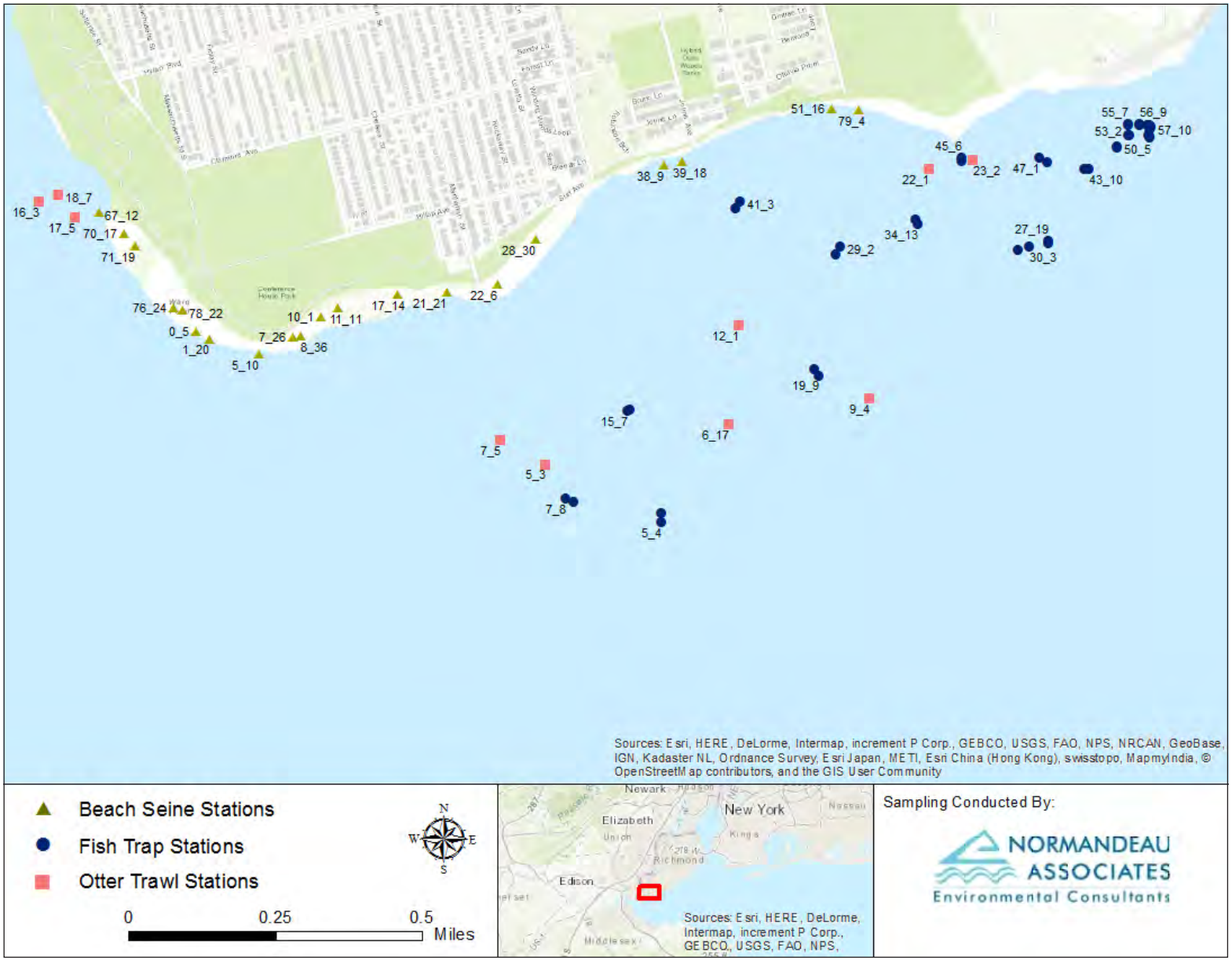

Beach Seine Stations

Fish Trap Stations

Otter Trawl Stations

N W E S

0 0.25 0.5 Miles

Sampling Conducted By:

NORMANDEAU ASSOCIATES
Environmental Consultants

Source: AKRF

Location of Fish Sampling Stations
June 2017

Figure 25d

Coastal and Social Resiliency Initiatives for Tottenville Shoreline
Essential Fish Habitat Assessment

12.12.17

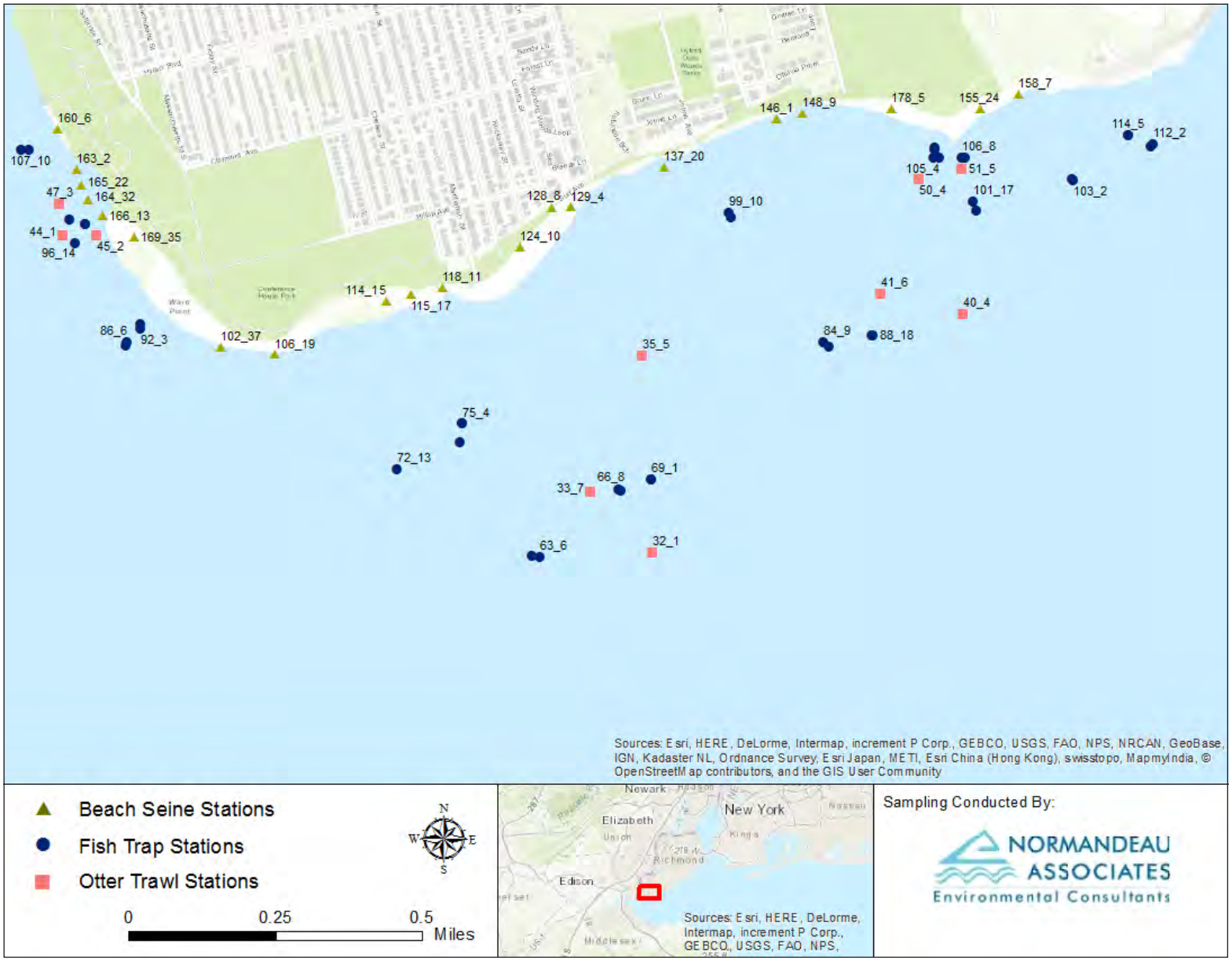

Source: AKRF

Location of Fish Sampling Stations
July 2017

Figure 25e

12.12.17

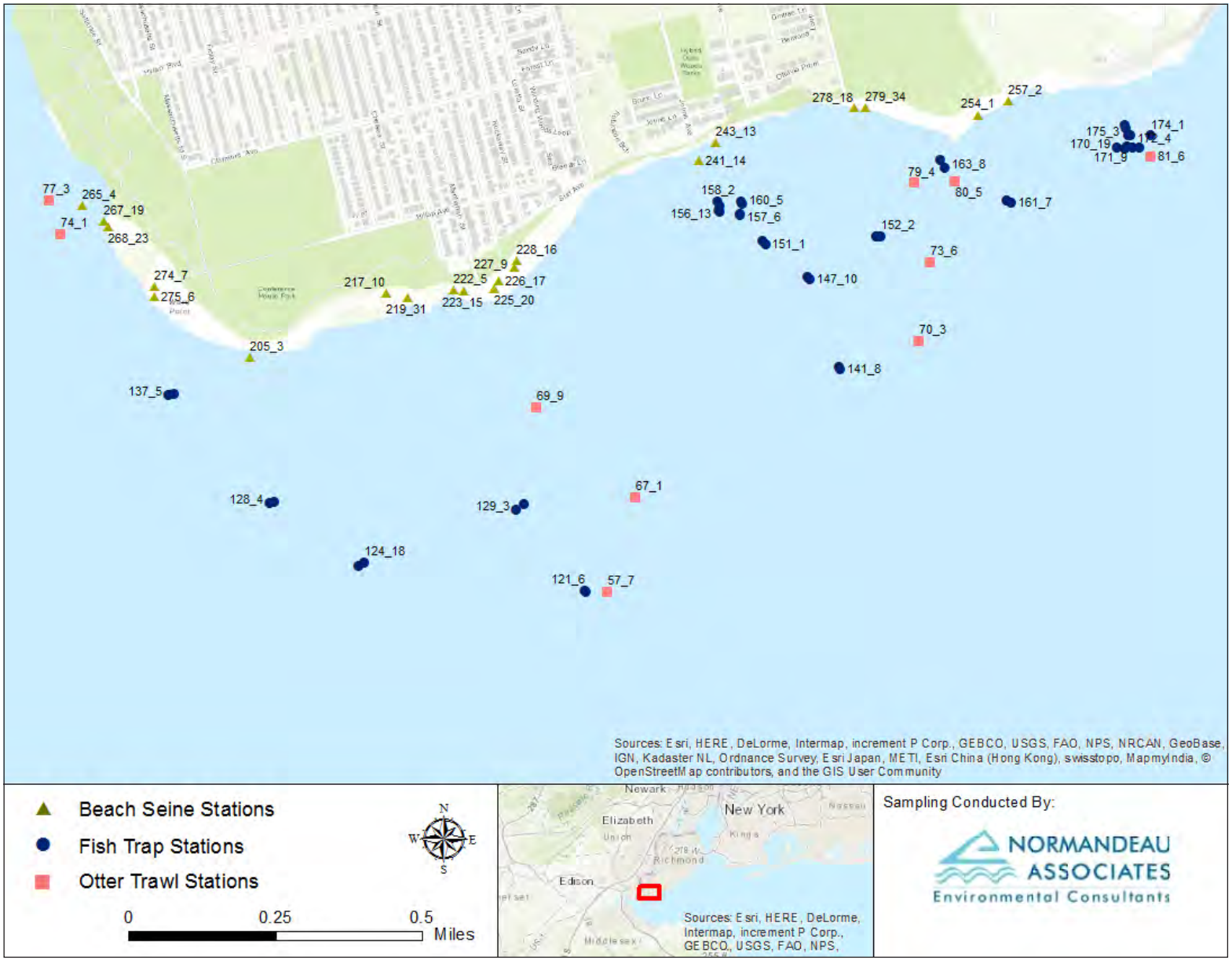

Source: AKRF

Location of Fish Sampling Stations
September 2017

Figure 25f

Coastal and Social Resiliency Initiatives for Tottenville Shoreline
Essential Fish Habitat Assessment

Appendix E-12
Essential Fish Habitat

Attachment 1

ATTACHMENT 1

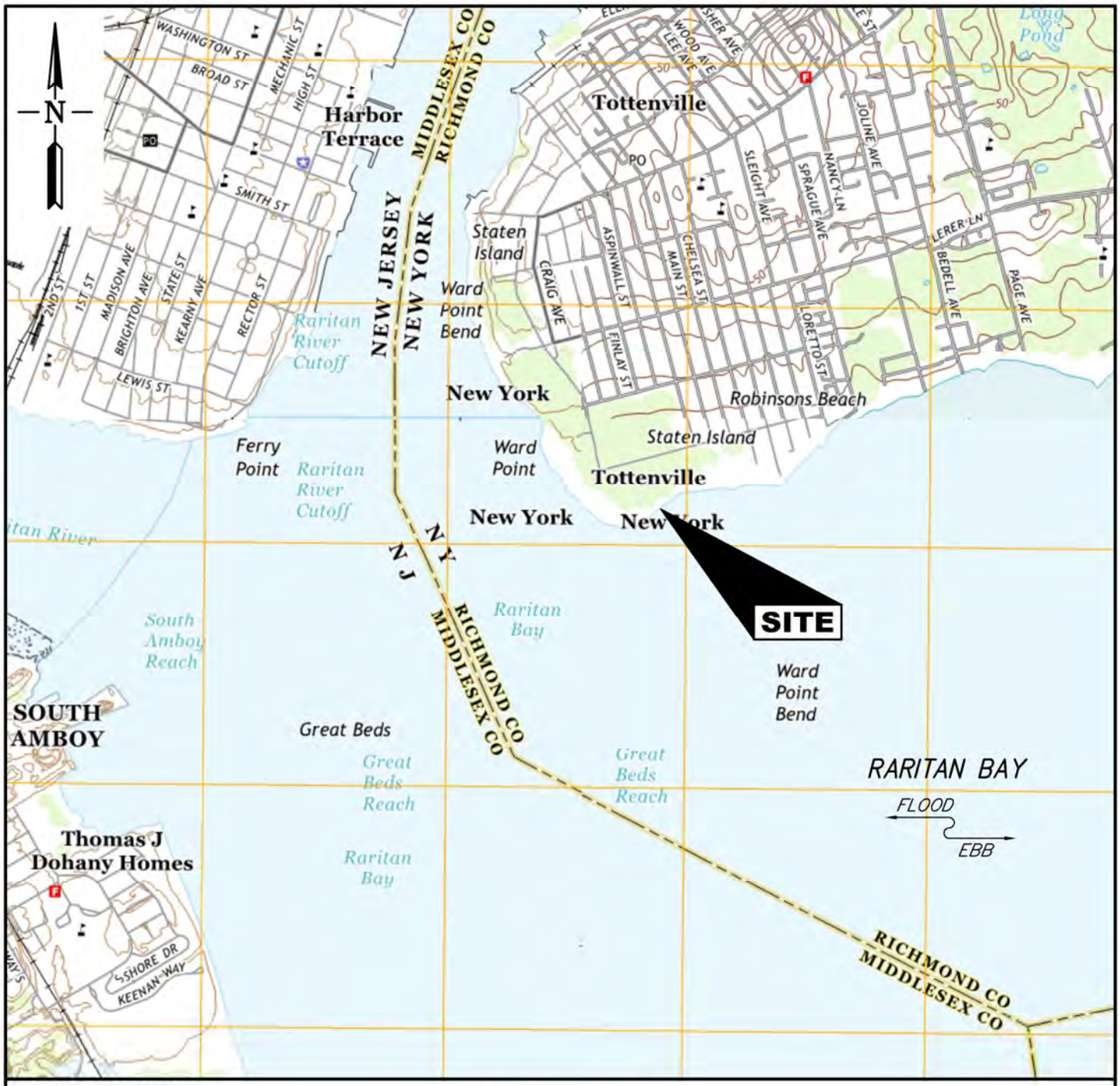

TAKEN FROM MULTIPLE USGS MAPS:
ARTHUR KILL, PERTH AMBOY, SOUTH AMBOY, & KEYPORT QUADRANGLE
NEW JERSEY–NEW YORK
7.5 MINUTE SERIES

VICINITY MAP

0 2000 4000 FT.

SCALE 1"=2000'–0"

FOR PERMIT USE ONLY NOT FOR CONSTRUCTION	DATUM: N.A.V.D. 88 APPLICATION BY: GOVERNOR'S OFFICE OF STORM RECOVERY APPLICATION NO.: AGENT: COWI	PROPOSED CONSTRUCTION OF LIVING BREAKWATERS WARD POINT BEND, RARITAN BAY TOTTENVILLE, STATEN ISLAND COUNTY OF RICHMOND STATE OF NEW YORK DATE: 10/30/2017 SHEET 1 OF 25

\\cowi.net\projects\A065000\A068233\CAD\A068233.2\Phase 3\Task 2\A068233 Permit Drawings\Permit 01 Vicinity Map.dwg Permit 01 Michelle Saraswati Mon, 30 Oct 2017 – 2:42pm

ATTACHMENT 1

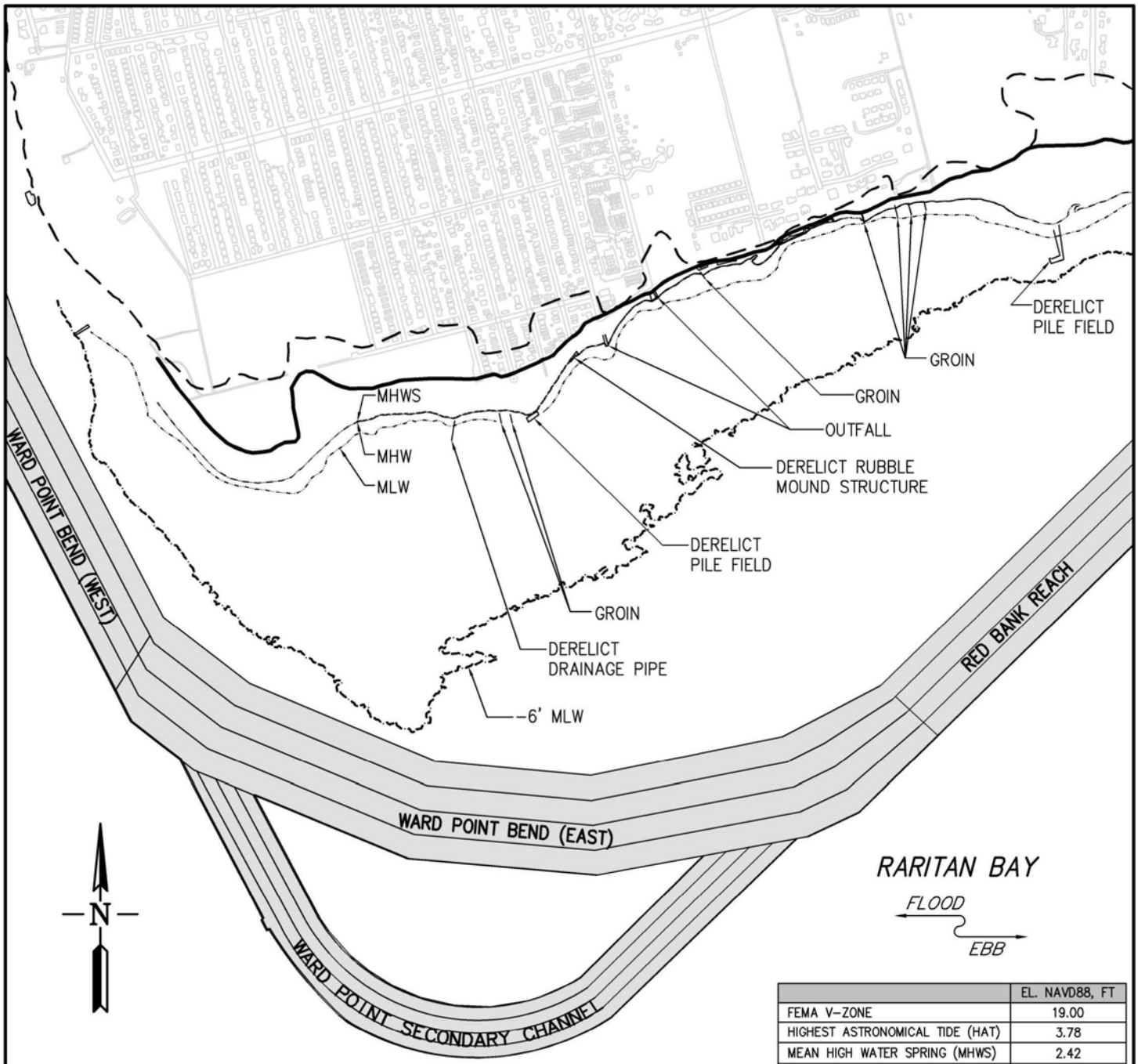

EXISTING OVERALL SITE PLAN

0 1200 2400 FT.

SCALE 1"=1200'-0"

LEGEND

- MEAN HIGH WATER SPRING
- MEAN HIGH WATER
- FEMA V-ZONE
- FEDERAL NAVIGATION CHANNEL
- MEAN LOW WATER
- LiMWA
- -6' MLW (NAVD88 EL. -8.62)

	EL. NAVD88, FT
FEMA V-ZONE	19.00
HIGHEST ASTRONOMICAL TIDE (HAT)	3.78
MEAN HIGH WATER SPRING (MHWS)	2.42
MEAN HIGHER HIGH WATER (MHHW)	2.41
MEAN HIGH WATER (MHW)	2.08
NAVD88	0.00
MSL	-0.24
MEAN LOW WATER (MLW)	-2.62
MEAN LOWER LOW WATER (MLLW)	-2.82
LOWEST ASTRONOMICAL TIDE (LAT)	-4.19

LIVING BREAKWATERS TIDAL DATA (BASED ON NOAA STATION NO. 8531680, SANDY HOOK, NJ)

FOR PERMIT USE ONLY
NOT FOR CONSTRUCTION

DATUM: N.A.V.D. 88

APPLICATION BY: GOVERNOR'S OFFICE OF STORM RECOVERY

APPLICATION NO.:

AGENT: COWI

PROPOSED CONSTRUCTION OF LIVING BREAKWATERS

WARD POINT BEND, RARITAN BAY
TOTTENVILLE, STATEN ISLAND
COUNTY OF RICHMOND
STATE OF NEW YORK

DATE: 10/30/2017

SHEET 2 OF 25

\\cowi.net\projects\A065000\A068233\CAD\A068233.2\Phase 3\Task 2\A068233 Permit Drawings\Permit 02 Existing Overall Site Plan.dwg Permit 02 Michelle Saraswati Mon, 30 Oct 2017 - 2:43pm

ATTACHMENT 1

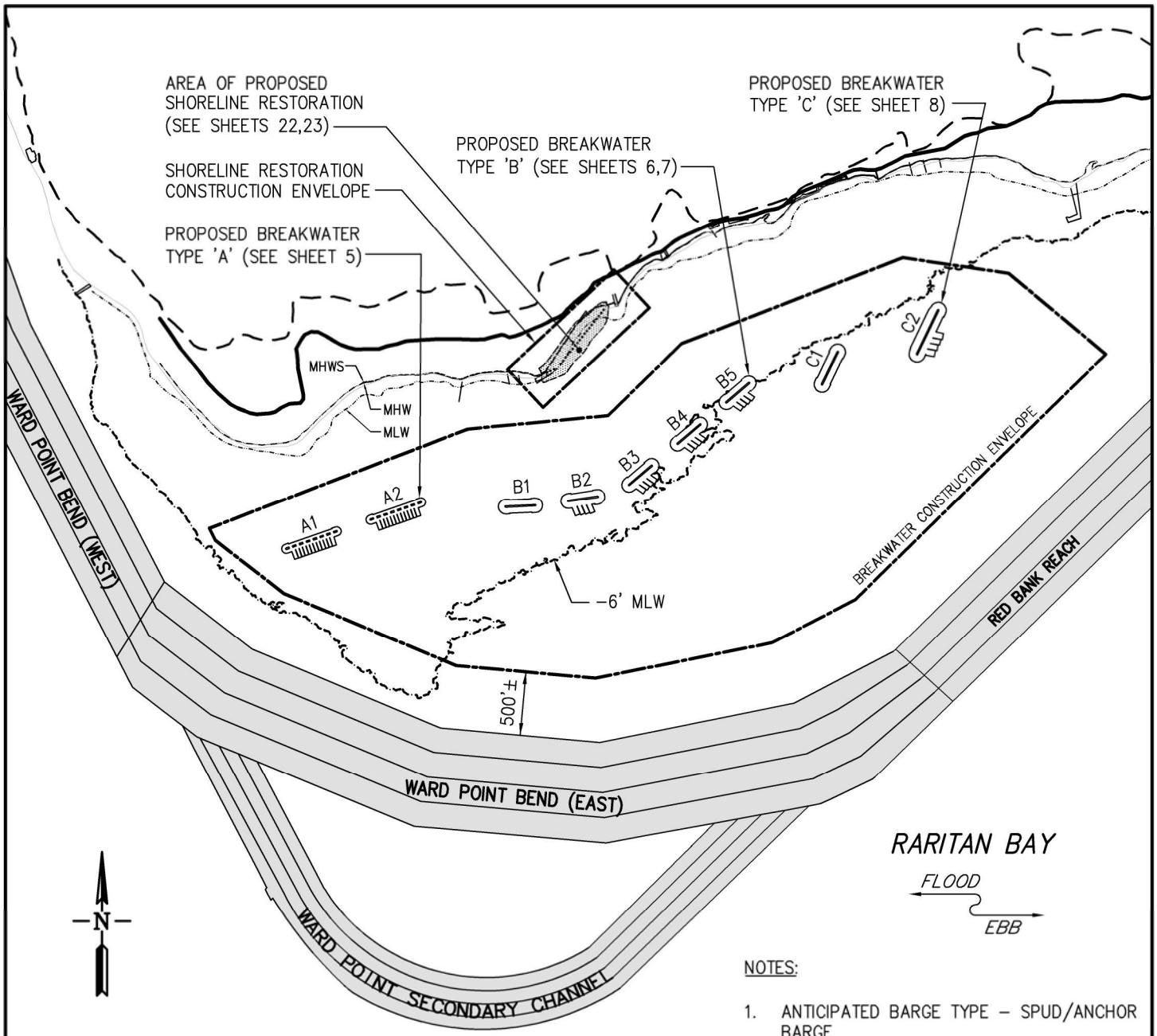

PROPOSED OVERALL SITE PLAN

0 1200 2400 FT.

SCALE 1"=1200'-0"

LEGEND

- MEAN HIGH WATER SPRING
- MEAN HIGH WATER
- NAVD88 EL. 0.0'
- MEAN LOW WATER
- -6' MLW (NAVD88 EL. -8.62)
- BREAKWATER CONSTRUCTION ENVELOPE
- LiMWA
- FEMA V-ZONE
- FEDERAL NAVIGATION CHANNEL
- PROPOSED SHORELINE RESTORATION
- CONSTRUCTION ENVELOPE

NOTES:

1. ANTICIPATED BARGE TYPE – SPUD/ANCHOR BARGE.
2. ANTICIPATED NUMBER OF OPERATING BARGES – 4 WORK AND 4 MATERIAL BARGES.
3. MINIMUM UNDERKEEL CLEARANCE AT MLW – 2FT.
4. ANTICIPATED MAX. BARGE STATIONARY TIME – 1 WEEK.
5. MINIMUM DISTANCE FROM BREAKWATER CONSTRUCTION ENVELOPE TO FEDERAL NAVIGATION CHANNEL IS APPROXIMATELY 500 FEET.

FOR PERMIT USE ONLY
NOT FOR CONSTRUCTION

DATUM: N.A.V.D. 88

APPLICATION BY: GOVERNOR'S OFFICE OF STORM RECOVERY

APPLICATION NO.:

AGENT: COWI

PROPOSED CONSTRUCTION OF LIVING BREAKWATERS

WARD POINT BEND, RARITAN BAY
TOTTENVILLE, STATEN ISLAND
COUNTY OF RICHMOND
STATE OF NEW YORK

DATE: 10/30/2017

SHEET 3 OF 25

\\cowi.net\projects\A065000\A068233\CAD\A068233.2\Phase 3\Task 2\A068233 Permit Drawings\Permit 03_05_06_07_08 Breakwater Site Plans.dwg Permit 03 Michelle Saraswati Mon, 30 Oct 2017 – 2:44pm

BREAKWATER	TOTAL LENGTH AT EL. 0 NAVD88 (FT)	TOTAL FOOTPRINT (FT^2)	TOTAL FOOTPRINT (ACRES)	FOOTPRINT SHALLOWER THAN -6' MLW (FT^2)	FOOTPRINT SHALLOWER THAN -6' MLW (ACRES)	TOTAL VOLUME (FT^3)	TOTAL VOLUME BELOW MHW (FT^3)	TOTAL VOLUME BELOW MHWS (FT^3)	TOTAL VOLUME (YD^3)	TOTAL VOLUME BELOW MHW (YD^3)	TOTAL VOLUME BELOW MHWS (YD^3)
A.1	450	59,600	1.4	59,600	1.4	269,000	254,200	256,700	9,970	9,420	9,510
A.2	450	59,600	1.4	59,600	1.4	269,000	254,200	256,700	9,970	9,420	9,510
B.1	300	39,000	0.9	39,000	0.9	395,000	274,100	280,200	14,630	10,160	10,380
B.2	300	51,500	1.2	51,500	1.2	440,400	319,500	325,500	16,310	11,840	12,060
B.3	300	51,500	1.2	48,900	1.1	440,400	319,500	325,500	16,310	11,840	12,060
B.4	300	51,500	1.2	34,000	0.8	440,400	319,500	325,500	16,310	11,840	12,060
B.5	300	51,500	1.2	16,500	0.4	440,400	319,500	325,500	16,310	11,840	12,060
C.1	350	49,000	1.1	0	0.0	546,000	402,300	409,400	20,230	14,900	15,170
C.2	450	82,700	1.9	0	0.0	856,900	667,500	676,800	31,740	24,730	25,070
TOTAL	3,200	495,900	11.4	309,100	7.1	4,097,500	3,130,300	3,181,800	151,780	115,990	117,880

BREAKWATER TYPES AND QUANTITIES

	AVERAGE CROSS SECTIONAL AREA (FT^2/FT)	PLAN AREA (FT^2)	LENGTH (FT)	VOLUME (FT^3)	VOLUME (YD^3)
TOTAL SHORELINE RESTORATION CONSIDERED	169	136,100	806	469,900	17,404
TOTAL SHORELINE RESTORATION BELOW MHW	142	114,500	806	314,200	11,637
TOTAL SHORELINE RESTORATION BELOW MHWS	146	117,700	806	333,200	12,341

PROPOSED SHORELINE RESTORATION QUANTITIES

NOTES:

1. PROPOSED SHORELINE RESTORATION QUANTITIES ARE BASED ON CONSTRUCTION SHORELINE RESTORATION PROFILE.
2. ALL VALUES INCLUDE AN ADDITIONAL 10% TO ACCOUNT FOR UNCERTAINTY.
3. SHORELINE RESTORATION AREAS ARE EXISTING AREAS IMPACTED BY THE CONSTRUCTION ACTIVITY.

FOR PERMIT USE ONLY
NOT FOR CONSTRUCTION

DATUM: N.A.V.D. 88

APPLICATION BY: GOVERNOR'S OFFICE OF STORM RECOVERY

APPLICATION NO.:

AGENT: COWI

PROPOSED CONSTRUCTION OF LIVING BREAKWATERS

WARD POINT BEND, RARITAN BAY
TOTTENVILLE, STATEN ISLAND
COUNTY OF RICHMOND
STATE OF NEW YORK

DATE: 10/30/2017

SHEET 4 OF 25

ATTACHMENT 1

ATTACHMENT 1

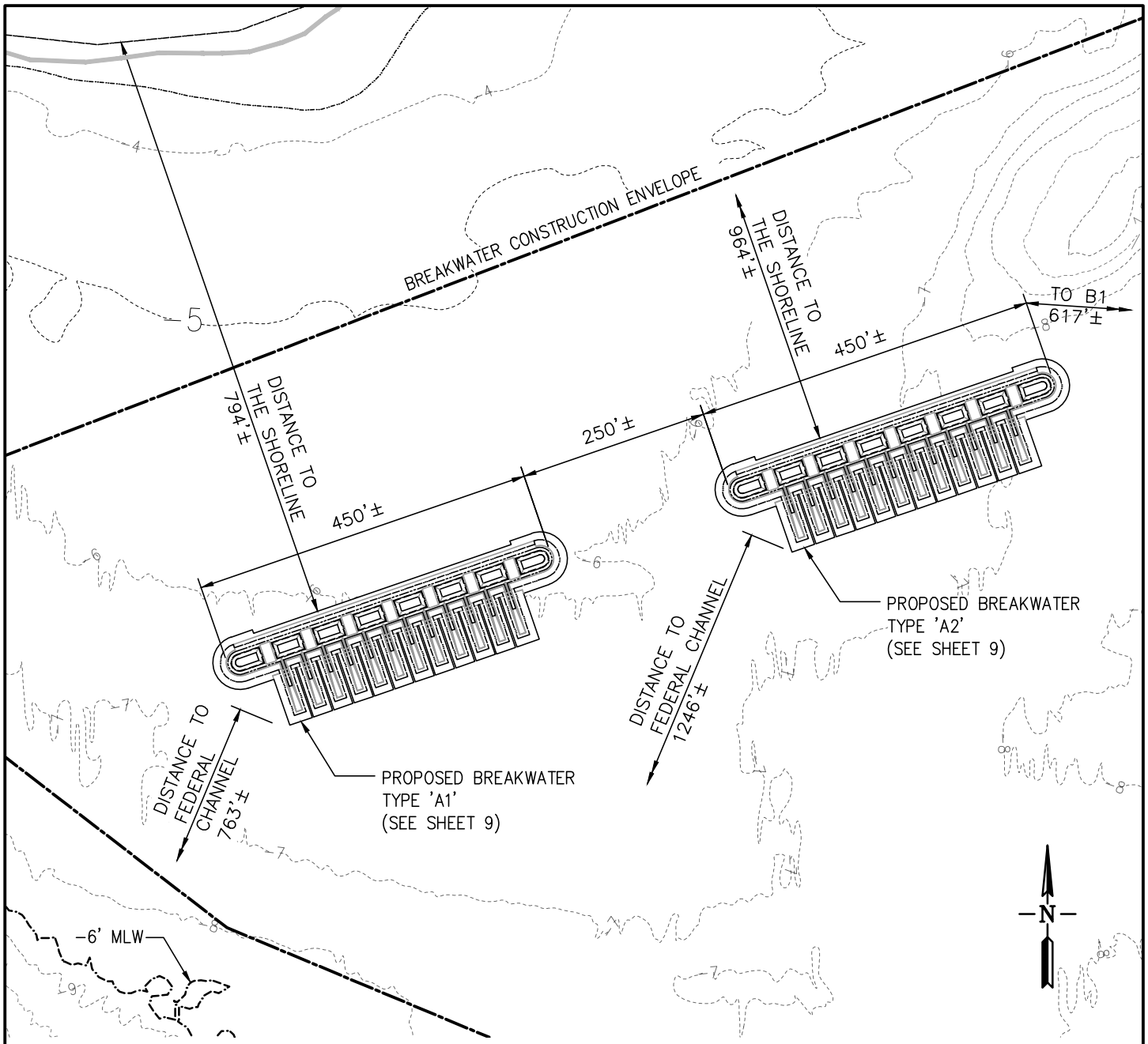

PROPOSED PARTIAL SITE PLAN

0 200 400 FT.

SCALE 1"=200'-0"

LEGEND

- MEAN HIGH WATER SPRING
- MEAN HIGH WATER
- NAVD88 EL. 0.0'
- MEAN LOW WATER
- -6' MLW (NAVD88 EL. -8.62)
- BREAKWATER CONSTRUCTION ENVELOPE

NOTES:

1. MINIMUM DISTANCE FROM BREAKWATER CONSTRUCTION ENVELOPE TO FEDERAL NAVIGATION CHANNEL IS APPROXIMATELY 500 FEET.
2. SHORELINE DISTANCE IS MEASURE TO MHW.

FOR PERMIT USE ONLY NOT FOR CONSTRUCTION	DATUM: N.A.V.D. 88 APPLICATION BY: GOVERNOR'S OFFICE OF STORM RECOVERY APPLICATION NO.: AGENT: COWI	PROPOSED CONSTRUCTION OF LIVING BREAKWATERS WARD POINT BEND, RARITAN BAY TOTTENVILLE, STATEN ISLAND COUNTY OF RICHMOND STATE OF NEW YORK DATE: 10/30/2017 SHEET 5 OF 25

ATTACHMENT 1

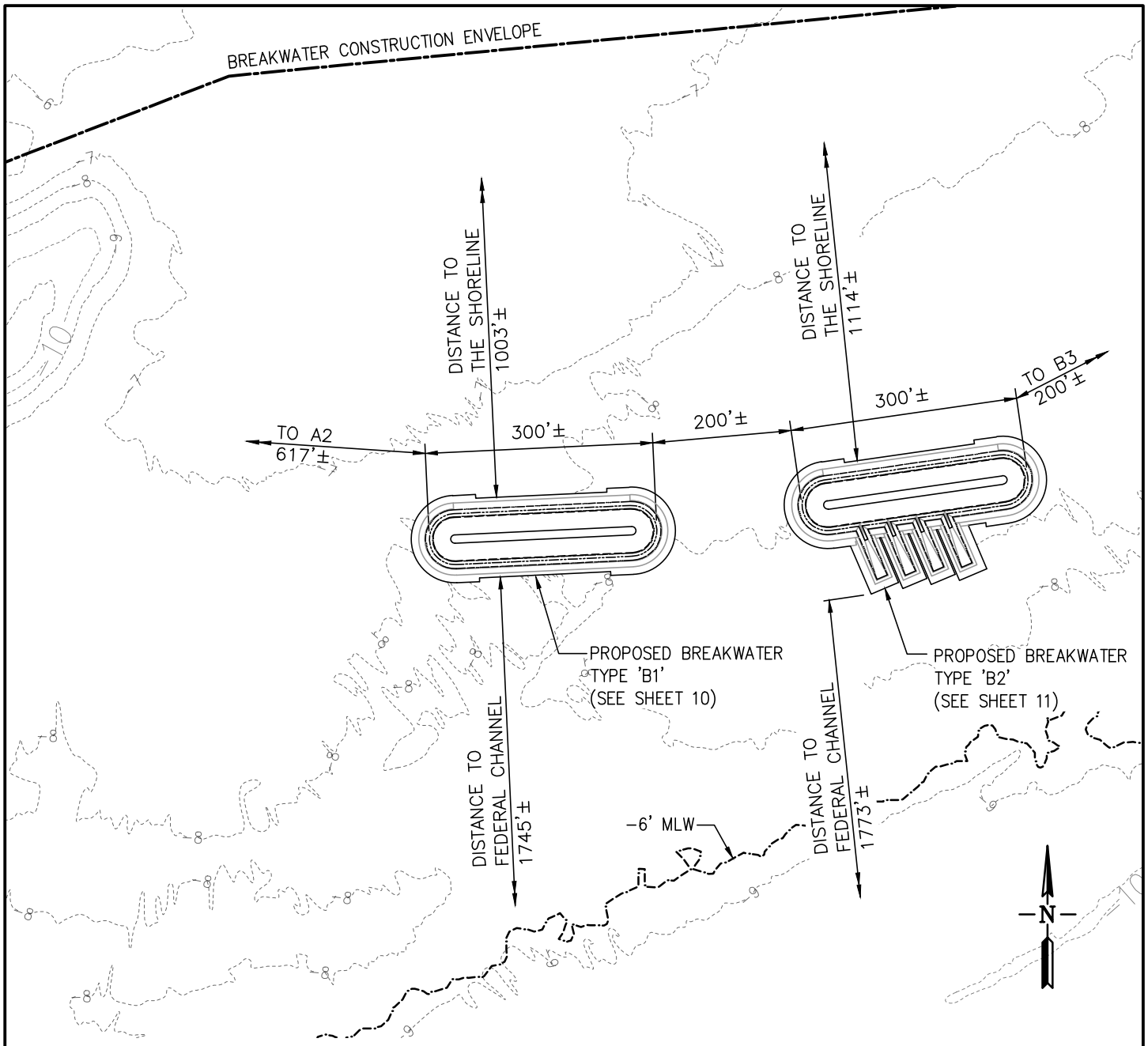

PROPOSED PARTIAL SITE PLAN

0 200 400 FT.

SCALE 1"=200'-0"

LEGEND

- -------- MEAN HIGH WATER SPRING
- ———— MEAN HIGH WATER
- —·—·— NAVD88 EL. 0.0'
- ———— MEAN LOW WATER
- —·—·— -6' MLW (NAVD88 EL. -8.62)
- ——·—— BREAKWATER CONSTRUCTION ENVELOPE

NOTES:

1. MINIMUM DISTANCE FROM BREAKWATER CONSTRUCTION ENVELOPE TO FEDERAL NAVIGATION CHANNEL IS APPROXIMATELY 500 FEET.
2. SHORELINE DISTANCE IS MEASURE TO MHW.

FOR PERMIT USE ONLY
NOT FOR CONSTRUCTION

DATUM: N.A.V.D. 88

APPLICATION BY: GOVERNOR'S OFFICE OF STORM RECOVERY

APPLICATION NO.:

AGENT: COWI

PROPOSED CONSTRUCTION OF LIVING BREAKWATERS

WARD POINT BEND, RARITAN BAY
TOTTENVILLE, STATEN ISLAND
COUNTY OF RICHMOND
STATE OF NEW YORK

DATE: 10/30/2017

ATTACHMENT 1

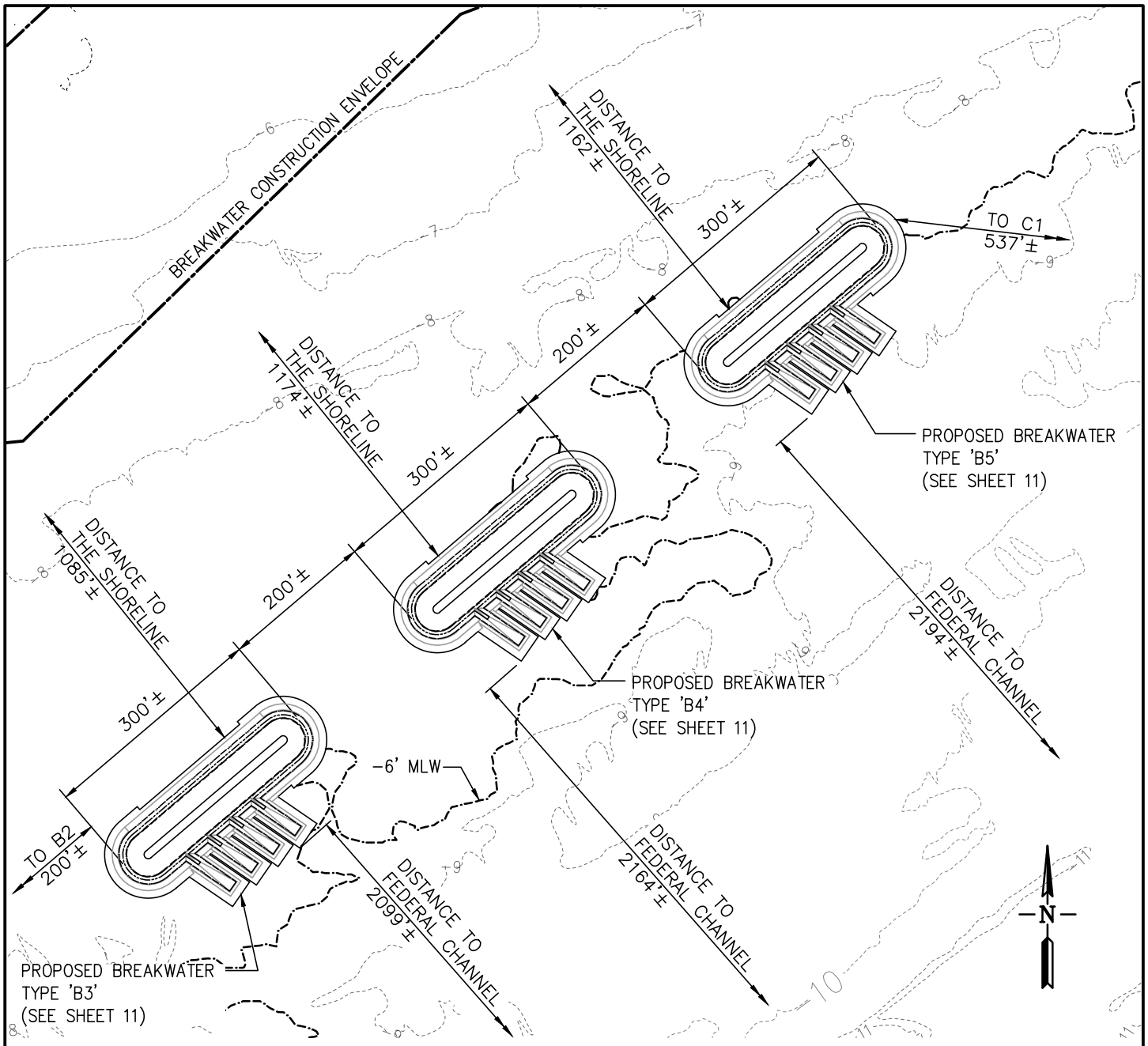

PROPOSED PARTIAL SITE PLAN

0 200 400 FT.

SCALE 1"=200'-0"

LEGEND

- MEAN HIGH WATER SPRING
- MEAN HIGH WATER
- NAVD88 EL. 0.0'
- MEAN LOW WATER
- -6' MLW (NAVD88 EL. -8.62)
- BREAKWATER CONSTRUCTION ENVELOPE

NOTES:

1. MINIMUM DISTANCE FROM BREAKWATER CONSTRUCTION ENVELOPE TO FEDERAL NAVIGATION CHANNEL IS APPROXIMATELY 500 FEET.
2. SHORELINE DISTANCE IS MEASURE TO MHW.

FOR PERMIT USE ONLY NOT FOR CONSTRUCTION	DATUM: N.A.V.D. 88 APPLICATION BY: GOVERNOR'S OFFICE OF STORM RECOVERY APPLICATION NO.: AGENT: COWI	PROPOSED CONSTRUCTION OF LIVING BREAKWATERS WARD POINT BEND, RARITAN BAY TOTTENVILLE, STATEN ISLAND COUNTY OF RICHMOND STATE OF NEW YORK DATE: 10/30/2017 SHEET 7 OF 25

ATTACHMENT 1

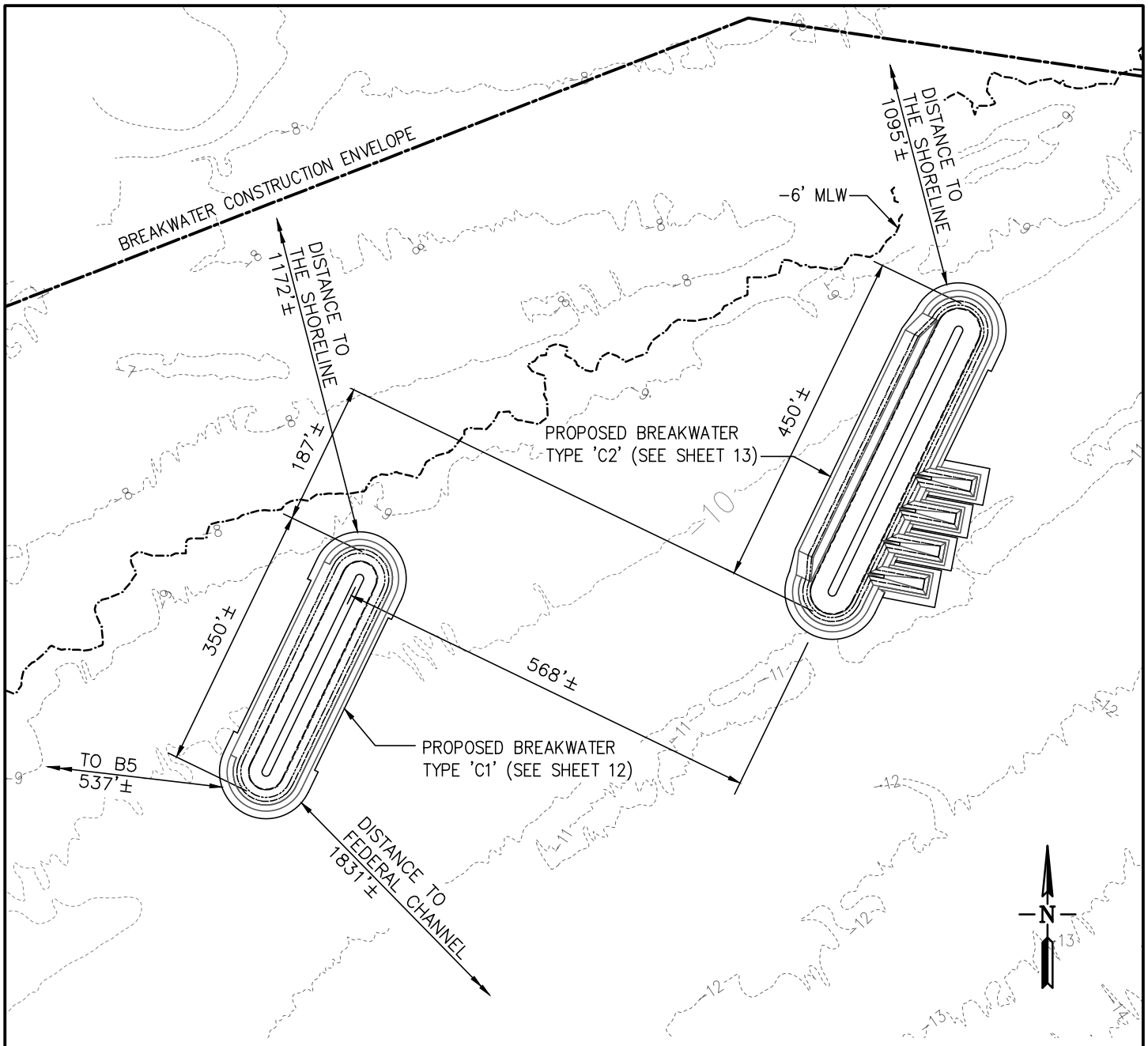

PROPOSED PARTIAL SITE PLAN

0 200 400 FT.

SCALE 1"=200'-0"

LEGEND

- MEAN HIGH WATER SPRING
- MEAN HIGH WATER
- NAVD88 EL. 0.0'
- MEAN LOW WATER
- -6' MLW (NAVD88 EL. -8.62)
- BREAKWATER CONSTRUCTION ENVELOPE

NOTES:

1. MINIMUM DISTANCE FROM BREAKWATER CONSTRUCTION ENVELOPE TO FEDERAL NAVIGATION CHANNEL IS APPROXIMATELY 500 FEET.
2. SHORELINE DISTANCE IS MEASURE TO MHW.

FOR PERMIT USE ONLY NOT FOR CONSTRUCTION	DATUM: N.A.V.D. 88 APPLICATION BY: GOVERNOR'S OFFICE OF STORM RECOVERY APPLICATION NO.: AGENT: COWI	PROPOSED CONSTRUCTION OF LIVING BREAKWATERS WARD POINT BEND, RARITAN BAY TOTTENVILLE, STATEN ISLAND COUNTY OF RICHMOND STATE OF NEW YORK DATE: 10/30/2017 SHEET 8 OF 25

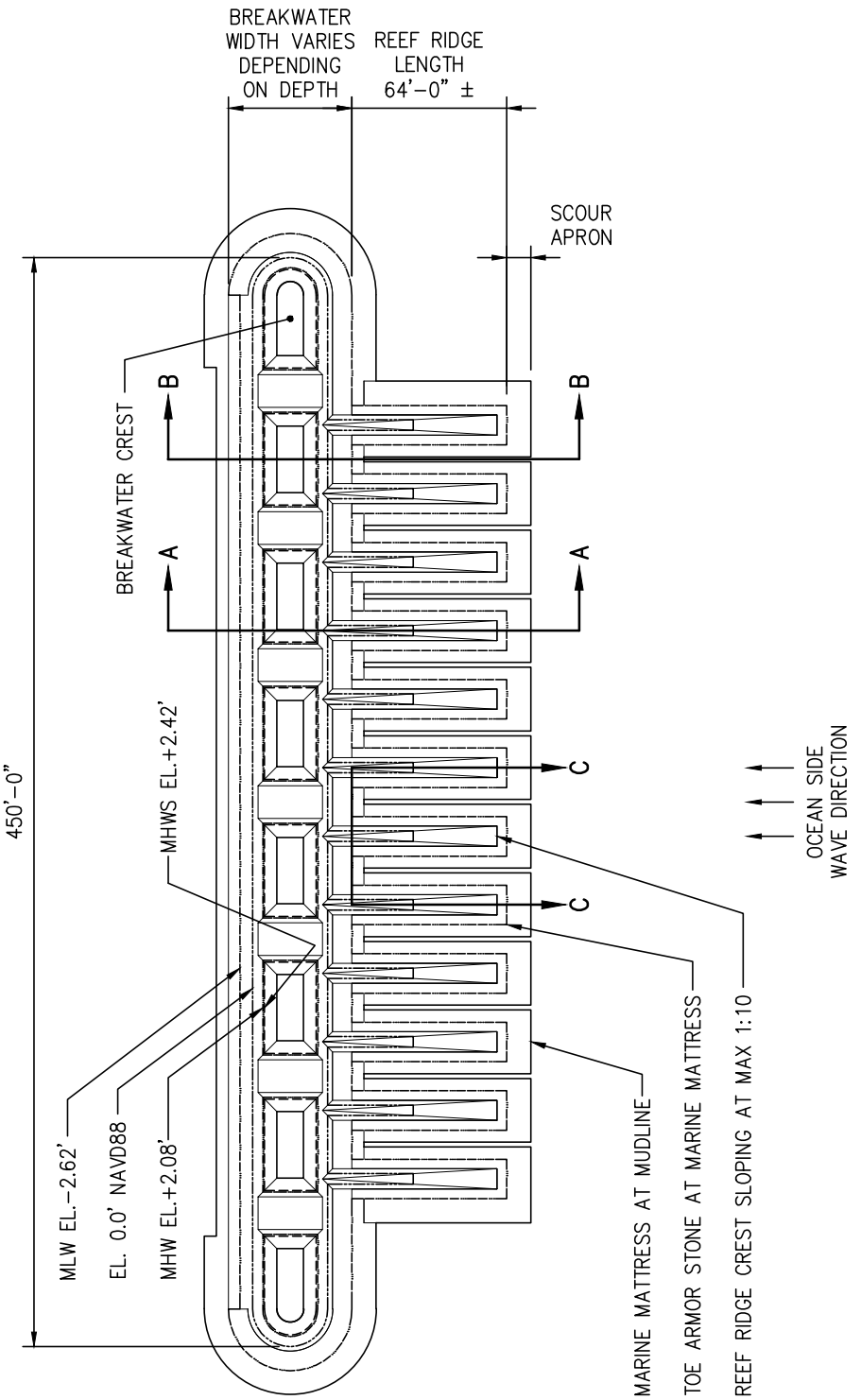

PROPOSED BREAKWATER PLAN – TYPE 'A1-A2'

SCALE: N.T.S.

LEGEND

- MEAN HIGH WATER SPRING
- MEAN HIGH WATER
- NAVD88 EL. 0.0'
- MEAN LOW WATER

FOR PERMIT USE ONLY
NOT FOR CONSTRUCTION

DATUM: N.A.V.D. 88

APPLICATION BY: GOVERNOR'S OFFICE OF STORM RECOVERY

APPLICATION NO.:

AGENT: COWI

PROPOSED CONSTRUCTION OF LIVING BREAKWATERS

WARD POINT BEND, RARITAN BAY
TOTTENVILLE, STATEN ISLAND
COUNTY OF RICHMOND
STATE OF NEW YORK

DATE: 10/30/2017

SHEET 9 OF 25

\\cowi.net\projects\A065000\A068233\CAD\A068233.2\Phase 3\Task 2\A068233 Permit Drawings\Permit 09_10_11_12_13 Breakwater Plans.dwg Permit 09 Michelle Saraswati Mon, 30 Oct 2017 – 2:47pm

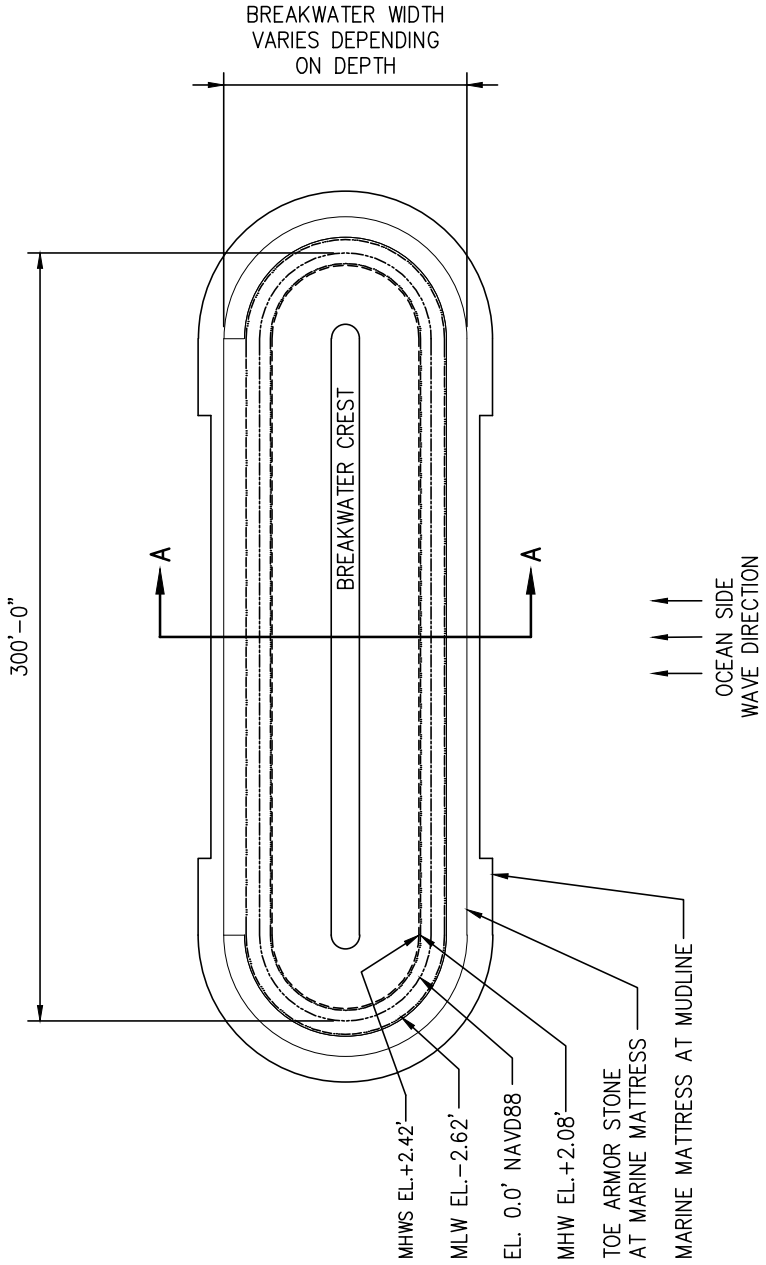

PROPOSED BREAKWATER PLAN – TYPE 'B1'

SCALE: N.T.S.

LEGEND

- MEAN HIGH WATER SPRING
- MEAN HIGH WATER
- NAVD88 EL. 0.0'
- MEAN LOW WATER

FOR PERMIT USE ONLY NOT FOR CONSTRUCTION	DATUM: N.A.V.D. 88 APPLICATION BY: GOVERNOR'S OFFICE OF STORM RECOVERY APPLICATION NO.: AGENT: COWI	PROPOSED CONSTRUCTION OF LIVING BREAKWATERS WARD POINT BEND, RARITAN BAY TOTTENVILLE, STATEN ISLAND COUNTY OF RICHMOND STATE OF NEW YORK DATE: 10/30/2017 SHEET 10 OF 25

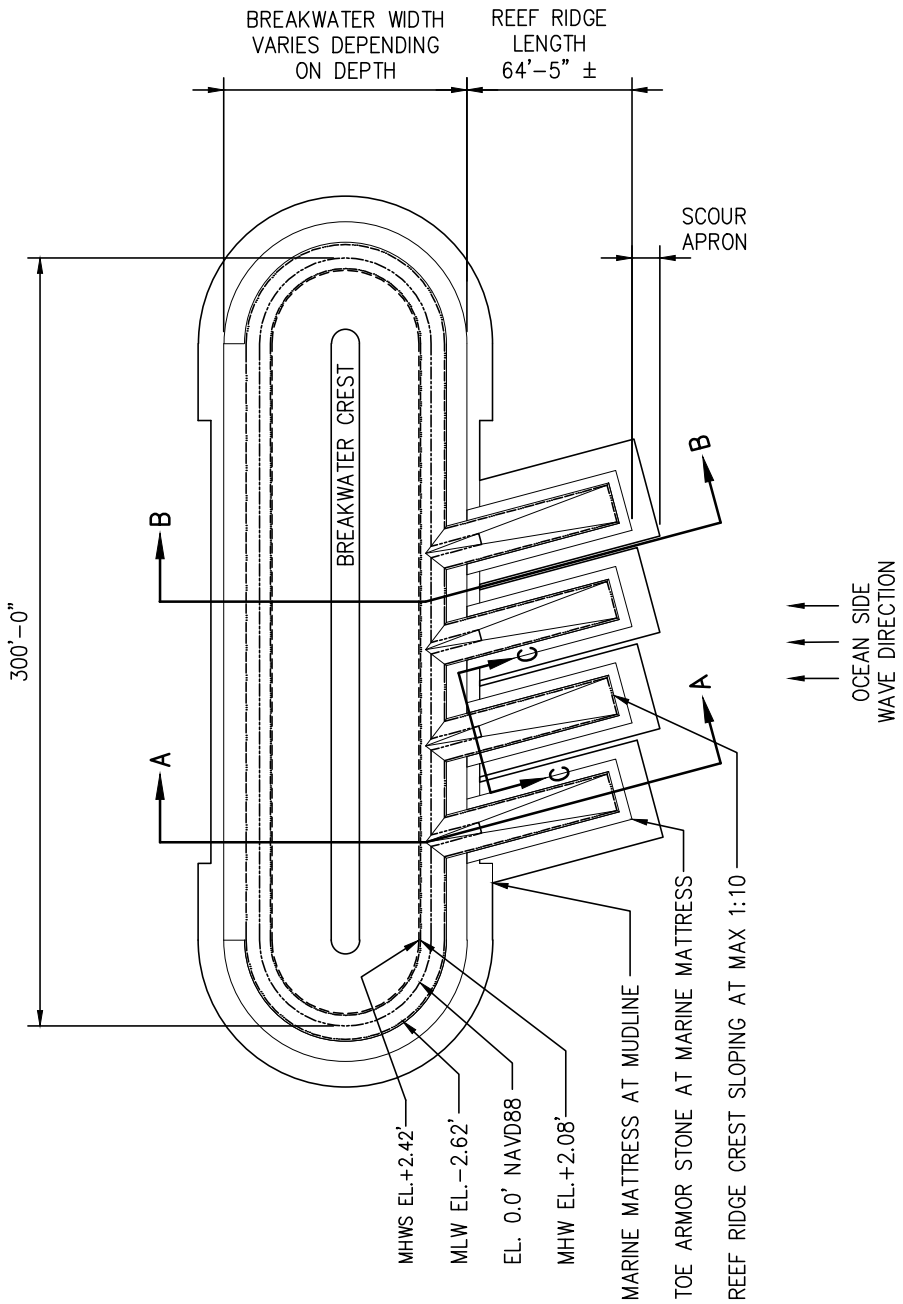

PROPOSED BREAKWATER PLAN – TYPE 'B2-B5'

SCALE: N.T.S.

LEGEND

- MEAN HIGH WATER SPRING
- MEAN HIGH WATER
- NAVD88 EL. 0.0'
- MEAN LOW WATER

FOR PERMIT USE ONLY
NOT FOR CONSTRUCTION

DATUM: N.A.V.D. 88

APPLICATION BY: GOVERNOR'S OFFICE OF STORM RECOVERY

APPLICATION NO.:

AGENT: COWI

PROPOSED CONSTRUCTION OF LIVING BREAKWATERS

WARD POINT BEND, RARITAN BAY
TOTTENVILLE, STATEN ISLAND
COUNTY OF RICHMOND
STATE OF NEW YORK

DATE: 10/30/2017

SHEET 11 OF 25

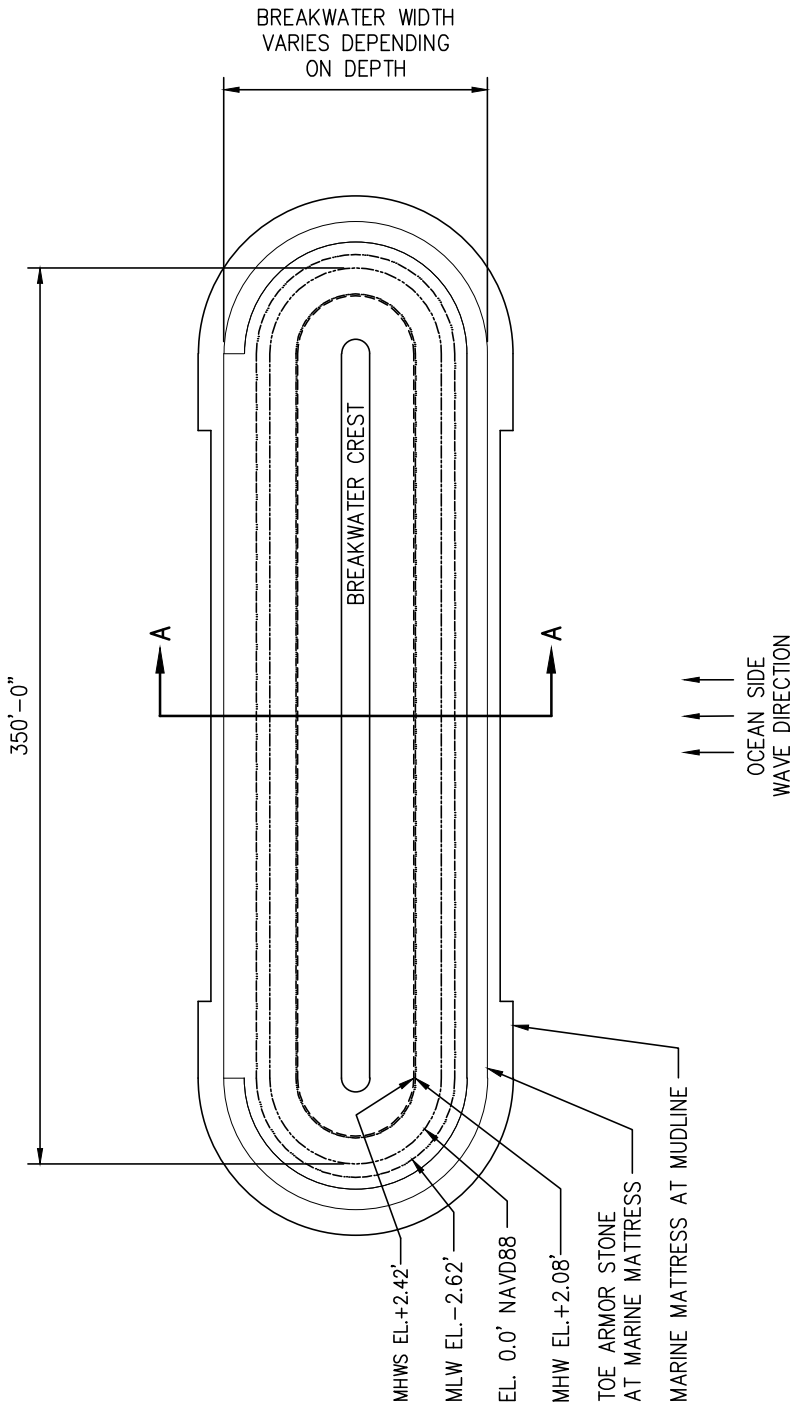

PROPOSED BREAKWATER PLAN – TYPE 'C1'

SCALE: N.T.S.

LEGEND

- MEAN HIGH WATER SPRING
- MEAN HIGH WATER
- NAVD88 EL. 0.0'
- MEAN LOW WATER

FOR PERMIT USE ONLY NOT FOR CONSTRUCTION	DATUM: N.A.V.D. 88 APPLICATION BY: GOVERNOR'S OFFICE OF STORM RECOVERY APPLICATION NO.: AGENT: COWI	PROPOSED CONSTRUCTION OF LIVING BREAKWATERS WARD POINT BEND, RARITAN BAY TOTTENVILLE, STATEN ISLAND COUNTY OF RICHMOND STATE OF NEW YORK DATE: 10/30/2017 SHEET 12 OF 25

ATTACHMENT 1

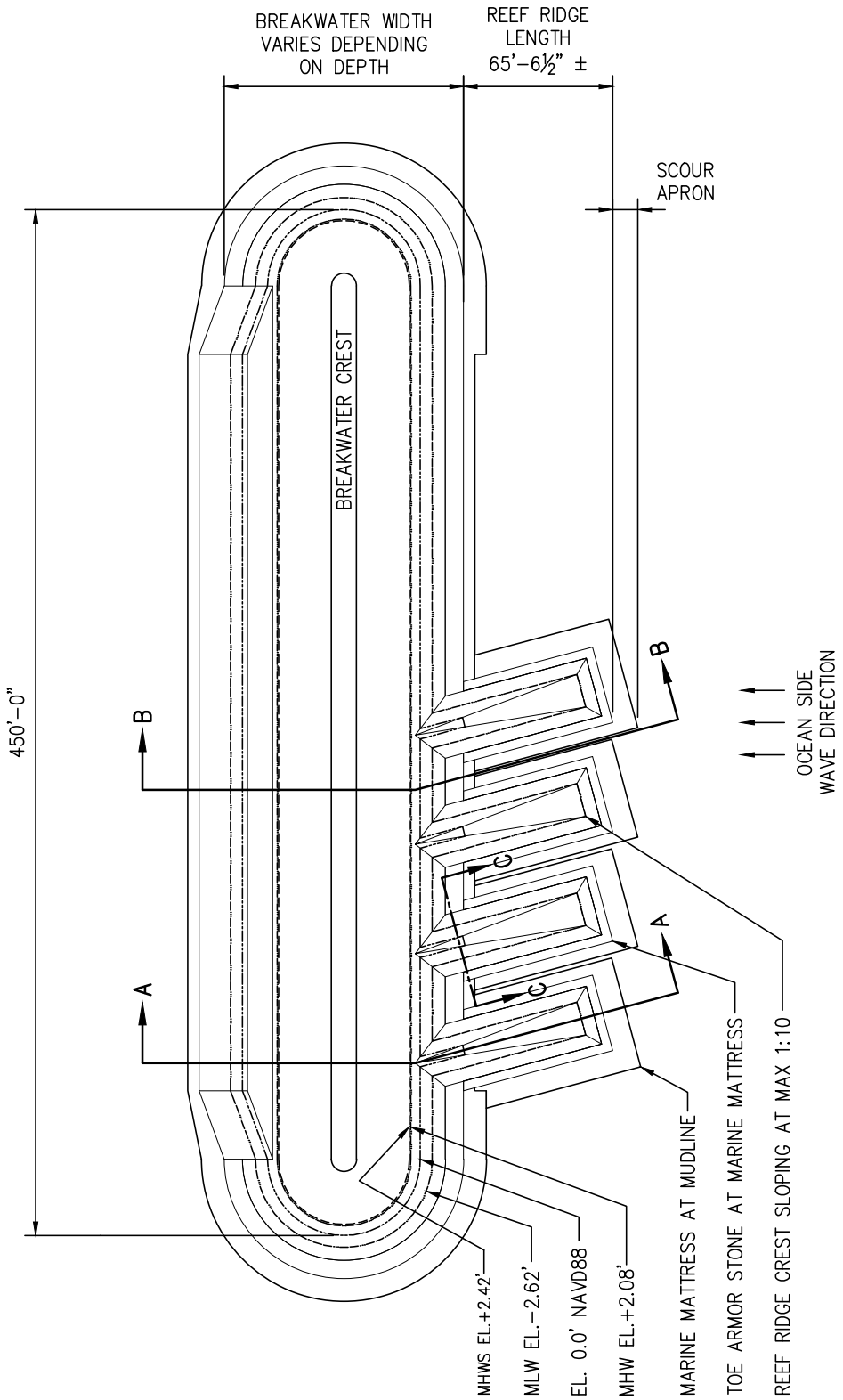

PROPOSED BREAKWATER PLAN – TYPE 'C2'

SCALE: N.T.S.

LEGEND

- MEAN HIGH WATER SPRING
- MEAN HIGH WATER
- NAVD88 EL. 0.0'
- MEAN LOW WATER

FOR PERMIT USE ONLY
NOT FOR CONSTRUCTION

DATUM: N.A.V.D. 88

APPLICATION BY: GOVERNOR'S OFFICE OF STORM RECOVERY

APPLICATION NO.:

AGENT: COWI

PROPOSED CONSTRUCTION OF LIVING BREAKWATERS

WARD POINT BEND, RARITAN BAY
TOTTENVILLE, STATEN ISLAND
COUNTY OF RICHMOND
STATE OF NEW YORK

DATE: 10/30/2017

SHEET 13 OF 25

\\cowi.net\projects\A065000\A068233\CAD\A068233.2\Phase 3\Task 2\A068233 Permit Drawings\Permit 09_10_11_12_13 Breakwater Plans.dwg Permit 13 Michelle Saraswati Mon, 30 Oct 2017 – 2:47pm

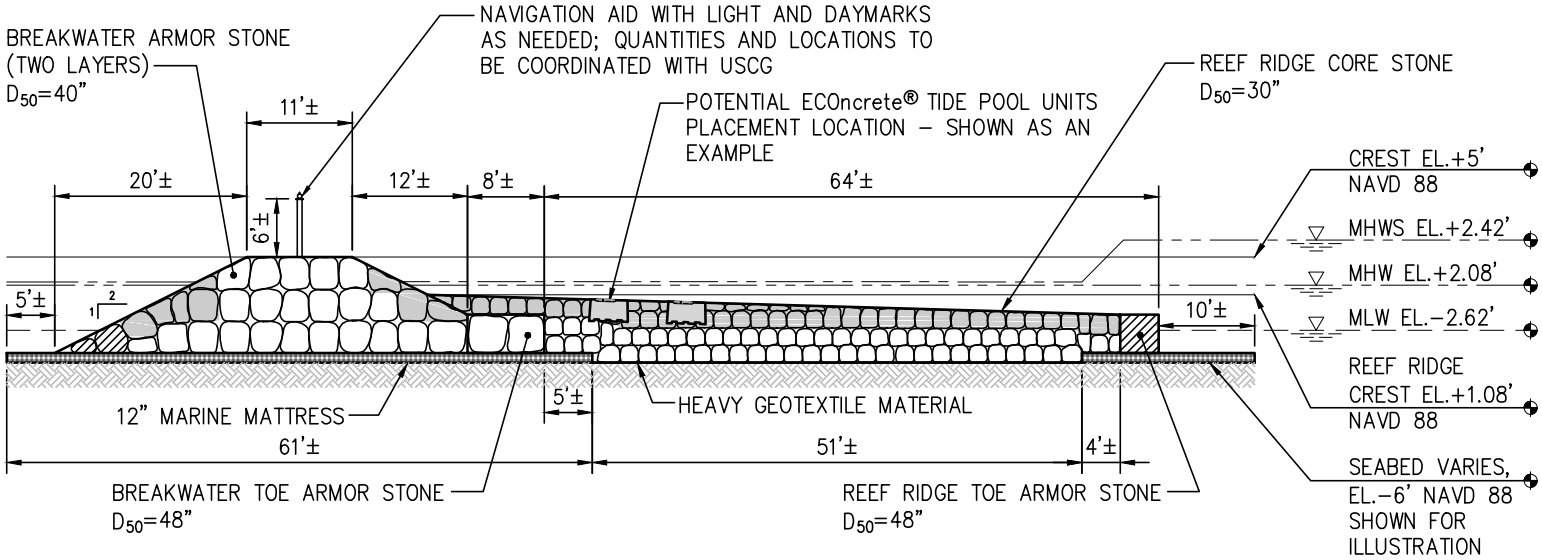

BREAKWATER TYPE 'A1–A2' PROPOSED SECTION A–A

NOTES:

1. WHERE POTENTIAL ECOncrete® ARMOR UNITS ARE INDICATED, ARMOR STONE WILL BE REPLACED WITH ECOncrete® ARMOR UNITS AT A RATE OF 30%; IN ALL OTHER LOCATIONS, ARMOR AND TOE UNITS WILL BE STONE OF THE SIZE INDICATED.
2. REFER TO SHEET 8 FOR BREAKWATER VOLUME SUMMARY.
3. ALL VALUES INCLUDE AN ADDITIONAL 10% TO ACCOUNT FOR UNCERTAINTY.

LEGEND	
POTENTIAL LOCATION FOR ECOncrete® ARMOR UNITS	
POTENTIAL LOCATION FOR ECOncrete® TIDE POOL UNITS	

0 20 40 FT.

SCALE 1"=20'–0"

FOR PERMIT USE ONLY
NOT FOR CONSTRUCTION

DATUM: N.A.V.D. 88

APPLICATION BY: GOVERNOR'S OFFICE OF STORM RECOVERY

APPLICATION NO.:

AGENT: COWI

PROPOSED CONSTRUCTION OF LIVING BREAKWATERS

WARD POINT BEND, RARITAN BAY
TOTTENVILLE, STATEN ISLAND
COUNTY OF RICHMOND
STATE OF NEW YORK

DATE: 10/30/2017

SHEET 14 OF 25

ATTACHMENT 1

\\cowi.net\projects\A065000\A068233\CAD\A068233.2\Phase 3\Task 2\A068233 Permit Drawings\Permit 14_15_16_17_18_19_20_21 Breakwater Sections.dwg Permit 14 Michelle Saraswati Mon, 30 Oct 2017 – 2:49pm

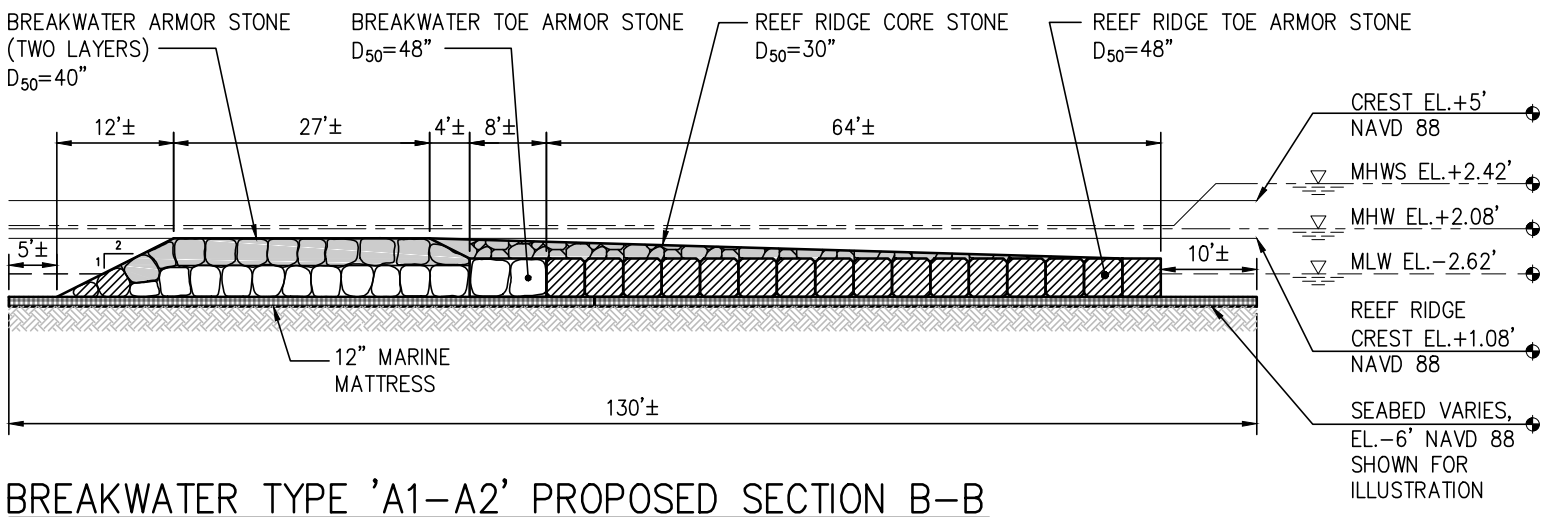

BREAKWATER TYPE 'A1-A2' PROPOSED SECTION B-B

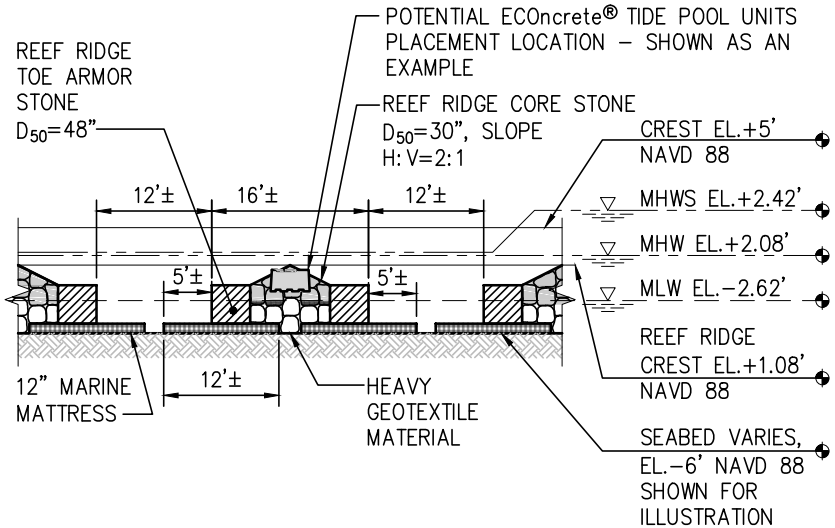

BREAKWATER TYPE 'A1-A2' PROPOSED SECTION C-C

LEGEND	
POTENTIAL LOCATION FOR ECOncrete® ARMOR UNITS	
POTENTIAL LOCATION FOR ECOncrete® TIDE POOL UNITS	

NOTES:

1. WHERE POTENTIAL ECOncrete® ARMOR UNITS ARE INDICATED, ARMOR STONE WILL BE REPLACED WITH ECOncrete® ARMOR UNITS AT A RATE OF 30%; IN ALL OTHER LOCATIONS, ARMOR AND TOE UNITS WILL BE STONE OF THE SIZE INDICATED.
2. REFER TO SHEET 8 FOR BREAKWATER VOLUME SUMMARY.

0 20 40 FT.

SCALE 1"=20'-0"

FOR PERMIT USE ONLY
NOT FOR CONSTRUCTION

DATUM: N.A.V.D. 88

APPLICATION BY: GOVERNOR'S OFFICE OF STORM RECOVERY

APPLICATION NO.:

AGENT: COWI

PROPOSED CONSTRUCTION OF LIVING BREAKWATERS

WARD POINT BEND, RARITAN BAY
TOTTENVILLE, STATEN ISLAND
COUNTY OF RICHMOND
STATE OF NEW YORK

DATE: 10/30/2017

SHEET 15 OF 25

ATTACHMENT 1

\\cowi.net\projects\A065000\A068233\CAD\A068233.2\Phase 3\Task 2\A068233 Permit Drawings\Permit 14_15_16_17_18_19_20_21 Breakwater Sections.dwg Permit 15 Michelle Saraswati Mon, 30 Oct 2017 - 2:49pm

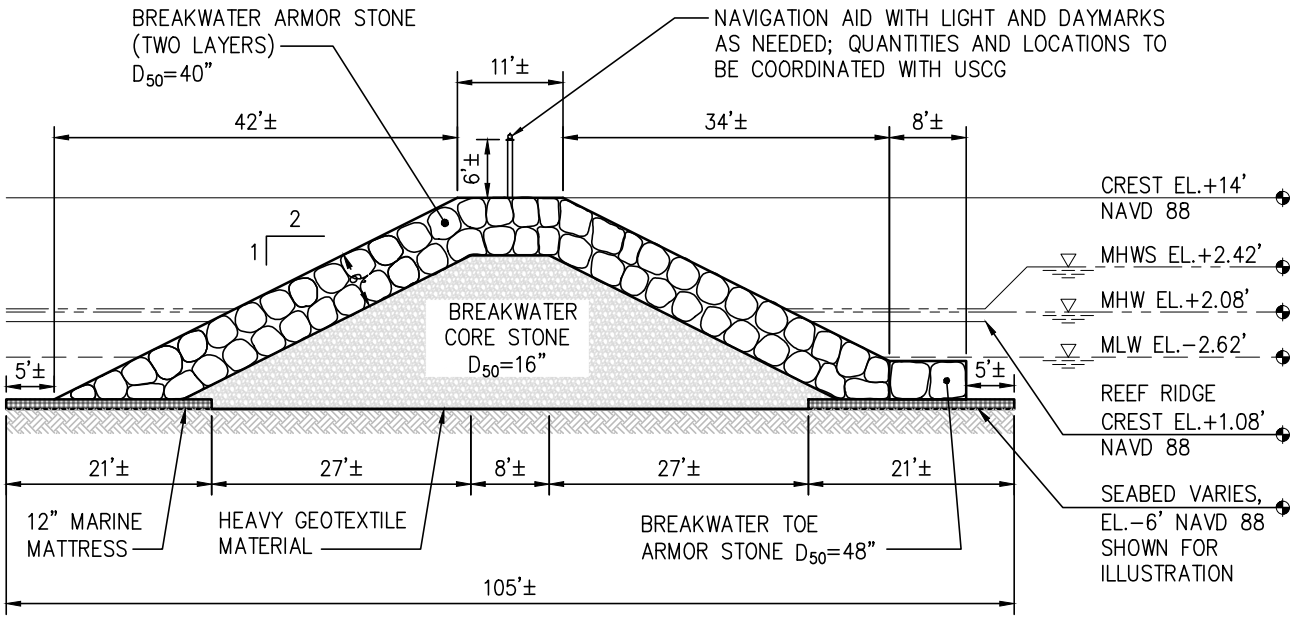

BREAKWATER TYPE 'B1' PROPOSED SECTION A–A

NOTES:

1. WHERE POTENTIAL ECOncrete® ARMOR UNITS ARE INDICATED, ARMOR STONE WILL BE REPLACED WITH ECOncrete® ARMOR UNITS AT A RATE OF 30%; IN ALL OTHER LOCATIONS, ARMOR AND TOE UNITS WILL BE STONE OF THE SIZE INDICATED.
2. REFER TO SHEET 8 FOR BREAKWATER VOLUME SUMMARY.
3. ALL VALUES INCLUDE AN ADDITIONAL 10% TO ACCOUNT FOR UNCERTAINTY.

0 20 40 FT.

SCALE 1"=20'–0"

FOR PERMIT USE ONLY
NOT FOR CONSTRUCTION

DATUM: N.A.V.D. 88

APPLICATION BY: GOVERNOR'S OFFICE OF STORM RECOVERY

APPLICATION NO.:

AGENT: COM

PROPOSED CONSTRUCTION OF LIVING BREAKWATERS

WARD POINT BEND, RARITAN BAY
TOTTENVILLE, STATEN ISLAND
COUNTY OF RICHMOND
STATE OF NEW YORK

DATE: 10/30/2017

SHEET 16 OF 25

ATTACHMENT 1

\\cowi.net\projects\A065000\A068233\CAD\A068233.2\Phase 3\Task 2\A068233 Permit Drawings\Permit 14_15_16_17_18_19_20_21 Breakwater Sections.dwg Permit 16 Michelle Saraswati Mon, 30 Oct 2017 – 2:49pm

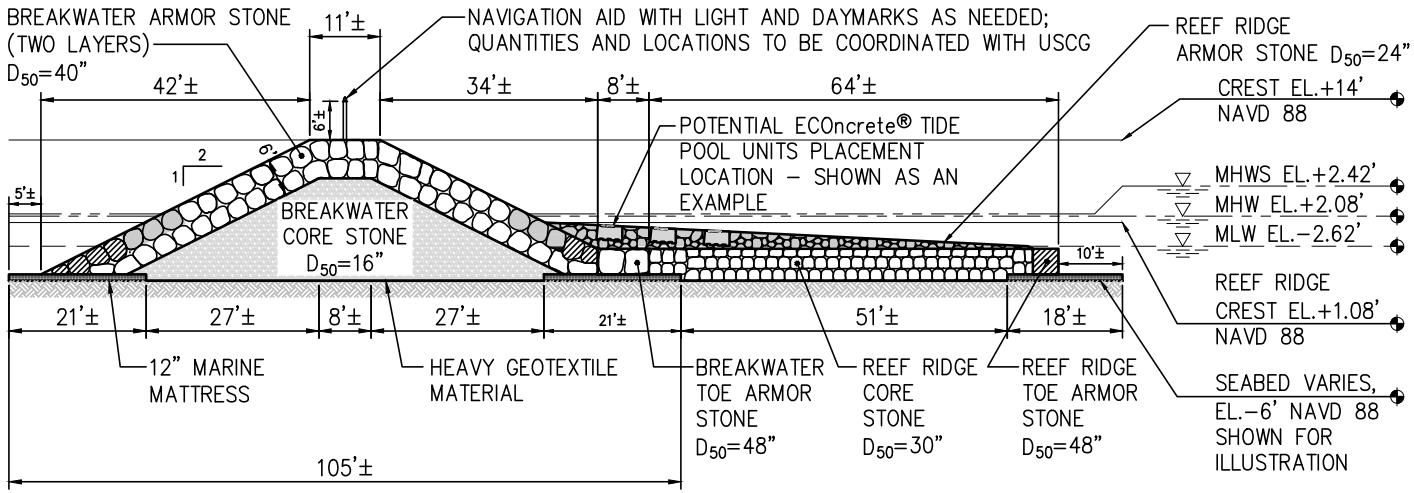

BREAKWATER TYPE 'B2–B5' PROPOSED SECTION A–A

NOTES:

1. WHERE POTENTIAL ECOncrete® ARMOR UNITS ARE INDICATED, ARMOR STONE WILL BE REPLACED WITH ECOncrete® ARMOR UNITS AT A RATE OF 30%; IN ALL OTHER LOCATIONS, ARMOR AND TOE UNITS WILL BE STONE OF THE SIZE INDICATED.
2. REFER TO SHEET 8 FOR BREAKWATER VOLUME SUMMARY.
3. ALL VALUES INCLUDE AN ADDITIONAL 10% TO ACCOUNT FOR UNCERTAINTY.

LEGEND	
POTENTIAL LOCATION FOR ECOncrete® ARMOR UNITS	
POTENTIAL LOCATION FOR ECOncrete® TIDE POOL UNITS	

0 30 60 FT.

SCALE 1"=30'–0"

FOR PERMIT USE ONLY
NOT FOR CONSTRUCTION

DATUM: N.A.V.D. 88

APPLICATION BY: GOVERNOR'S OFFICE OF STORM RECOVERY

APPLICATION NO.:

AGENT: COWI

PROPOSED CONSTRUCTION OF LIVING BREAKWATERS

WARD POINT BEND, RARITAN BAY
TOTTENVILLE, STATEN ISLAND
COUNTY OF RICHMOND
STATE OF NEW YORK

DATE: 10/30/2017

SHEET 17 OF 25

ATTACHMENT 1

\\cowi.net\projects\A065000\A068233\CAD\A068233.2\Phase 3\Task 2\A068233 Permit Drawings\Permit 14_15_16_17_18_19_20_21 Breakwater Sections.dwg Permit 17 Michelle Saraswati Mon, 30 Oct 2017 – 2:49pm

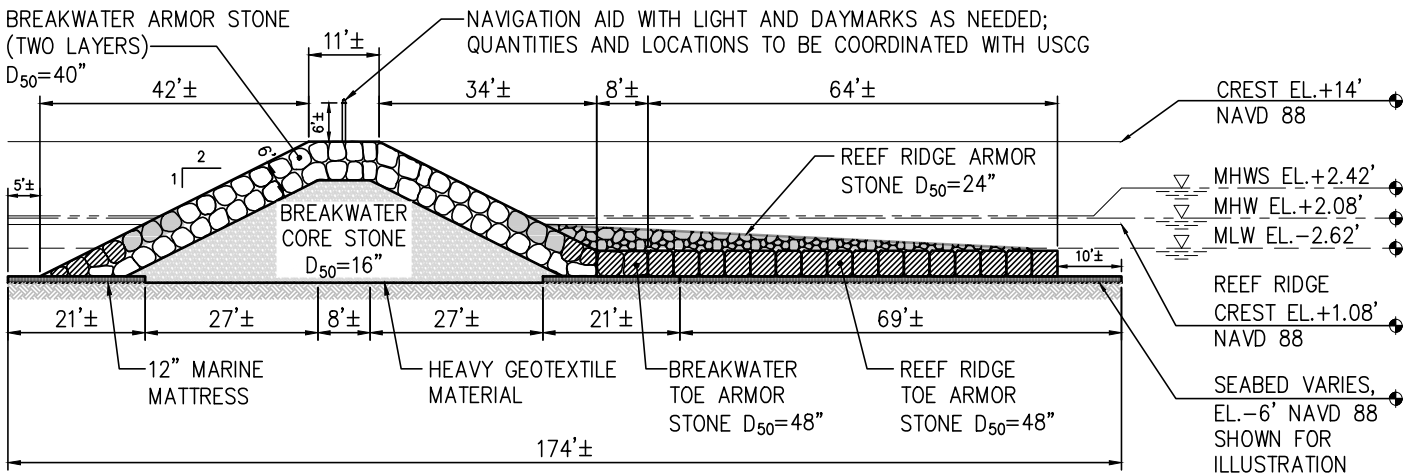

BREAKWATER TYPE 'B2-B5' PROPOSED SECTION B-B

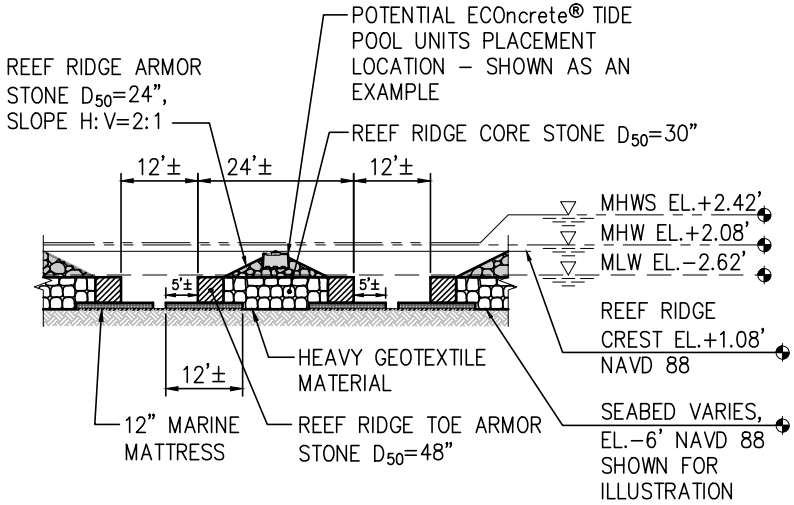

BREAKWATER TYPE 'B2-B5' PROPOSED SECTION C-C

LEGEND	
POTENTIAL LOCATION FOR ECOncrete® ARMOR UNITS	
POTENTIAL LOCATION FOR ECOncrete® TIDE POOL UNITS	

NOTES:

1. WHERE POTENTIAL ECOncrete® ARMOR UNITS ARE INDICATED, ARMOR STONE WILL BE REPLACED WITH ECOncrete® ARMOR UNITS AT A RATE OF 30%; IN ALL OTHER LOCATIONS, ARMOR AND TOE UNITS WILL BE STONE OF THE SIZE INDICATE
2. REFER TO SHEET 8 FOR BREAKWATER VOLUME SUMMARY.
3. ALL VALUES INCLUDE AN ADDITIONAL 10% TO ACCOUNT FOR UNCERTAINTY.

0 30 60 FT.

SCALE 1"=30'-0"

ATTACHMENT 1

FOR PERMIT USE ONLY
NOT FOR CONSTRUCTION

DATUM: N.A.V.D. 88

APPLICATION BY: GOVERNOR'S OFFICE OF STORM RECOVERY

APPLICATION NO.:

AGENT: COWI

PROPOSED CONSTRUCTION OF LIVING BREAKWATERS

WARD POINT BEND, RARITAN BAY
TOTTENVILLE, STATEN ISLAND
COUNTY OF RICHMOND
STATE OF NEW YORK

DATE: 10/30/2017

SHEET 18 OF 25

\\cowi.net\projects\A065000\A068233\CAD\A068233.2\Phase 3\Task 2\A068233 Permit Drawings\Permit 14_15_16_17_18_19_20_21 Breakwater Sections.dwg Permit 18 Michelle Saraswati Mon, 30 Oct 2017 - 2:49pm

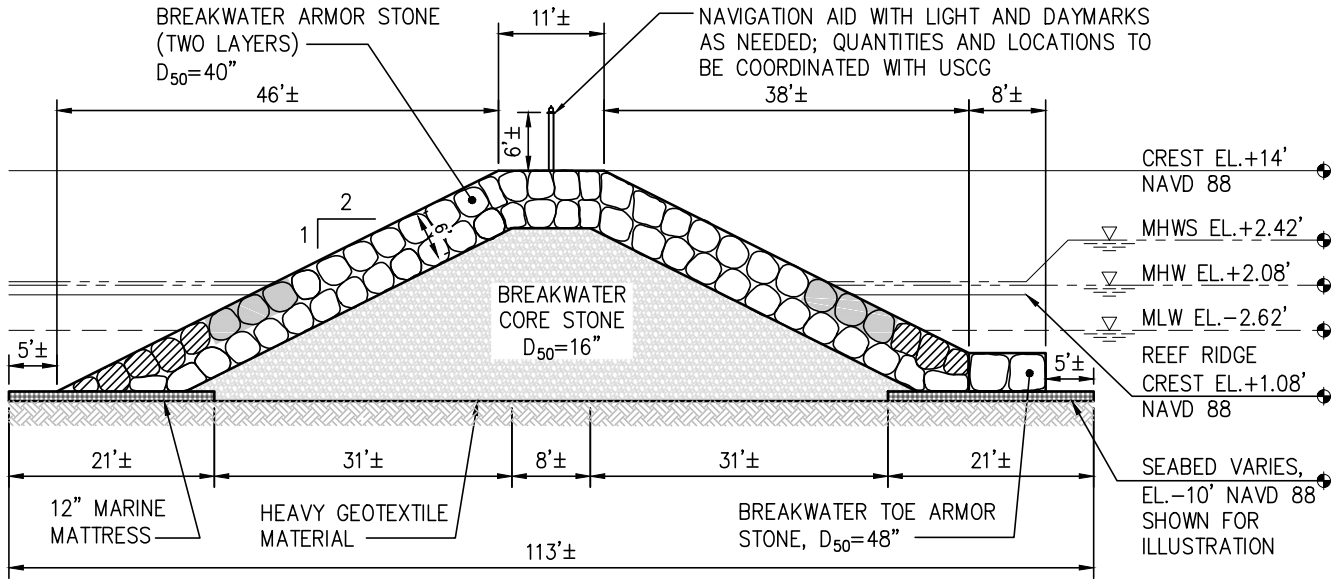

BREAKWATER TYPE 'C1' PROPOSED SECTION A–A

NOTES:

1. WHERE POTENTIAL ECOncrete® ARMOR UNITS ARE INDICATED, ARMOR STONE WILL BE REPLACED WITH ECOncrete® ARMOR UNITS AT A RATE OF 30%; IN ALL OTHER LOCATIONS, ARMOR AND TOE UNITS WILL BE STONE OF THE SIZE INDICATED.
2. REFER TO SHEET 8 FOR BREAKWATER VOLUME SUMMARY.
3. ALL VALUES INCLUDE AN ADDITIONAL 10% TO ACCOUNT FOR UNCERTAINTY.

LEGEND	
POTENTIAL LOCATION FOR ECOncrete® ARMOR UNITS	
POTENTIAL LOCATION FOR ECOncrete® TIDE POOL UNITS	

0 20 40 FT.

SCALE 1"=20'–0"

FOR PERMIT USE ONLY
NOT FOR CONSTRUCTION

DATUM: N.A.V.D. 88

APPLICATION BY: GOVERNOR'S OFFICE OF STORM RECOVERY

APPLICATION NO.:

AGENT: COWI

PROPOSED CONSTRUCTION OF LIVING BREAKWATERS

WARD POINT BEND, RARITAN BAY
TOTTENVILLE, STATEN ISLAND
COUNTY OF RICHMOND
STATE OF NEW YORK

DATE: 10/30/2017

SHEET 19 OF 25

ATTACHMENT 1

\\cowi.net\projects\A065000\A068233\CAD\A068233.2\Phase 3\Task 2\A068233 Permit Drawings\Permit 14_15_16_17_18_19_20_21 Breakwater Sections.dwg Permit 19 Michelle Saraswati Mon, 30 Oct 2017 – 2:49pm

ATTACHMENT 1

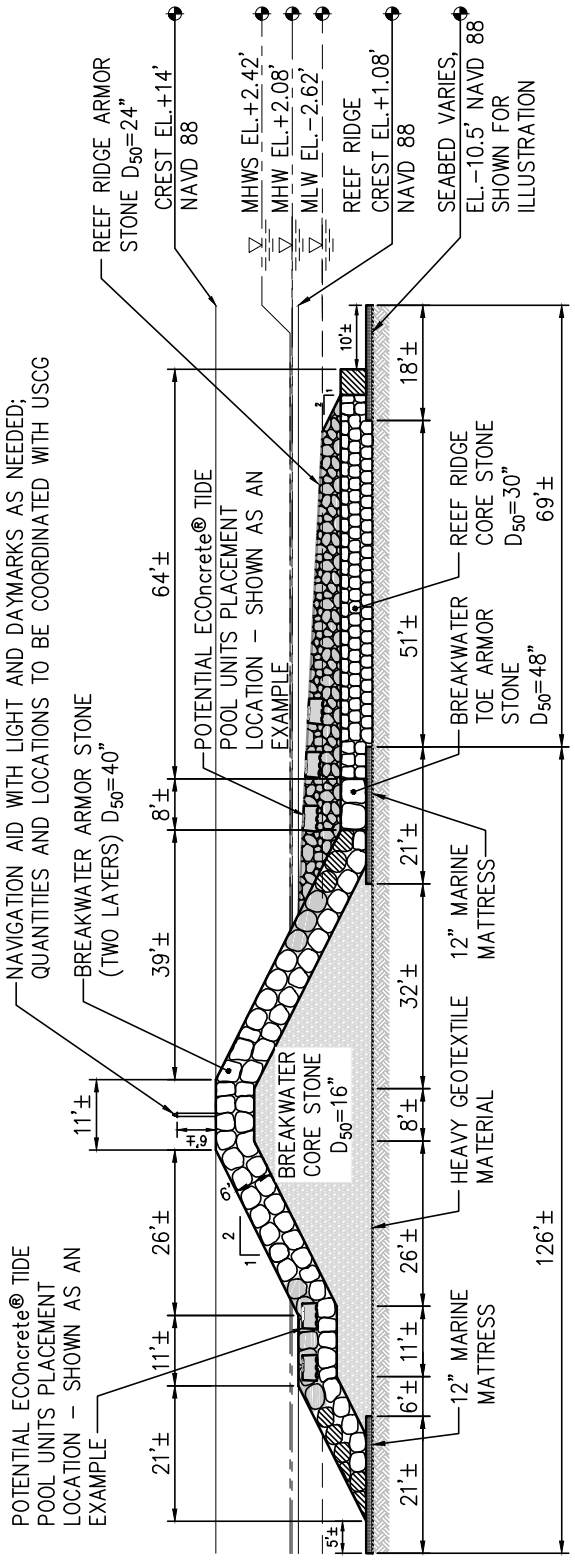

BREAKWATER TYPE 'C2' PROPOSED SECTION A-A

LEGEND

POTENTIAL LOCATION FOR ECOncrete® ARMOR UNITS

POTENTIAL LOCATION FOR ECOncrete® TIDE POOL UNITS

0 30 60 FT.

SCALE 1"=30'-0"

NOTES:

1. WHERE POTENTIAL ECOncrete® ARMOR UNITS ARE INDICATED, ARMOR STONE WILL BE REPLACED WITH ECOncrete® ARMOR UNITS AT A RATE OF 30%; IN ALL OTHER LOCATIONS, ARMOR AND TOE UNITS WILL BE STONE OF THE SIZE INDICATED.
2. REFER TO SHEET 8 FOR BREAKWATER VOLUME SUMMARY.
3. ALL VALUES INCLUDE AN ADDITIONAL 10% TO ACCOUNT FOR UNCERTAINTY.

FOR PERMIT USE ONLY
NOT FOR CONSTRUCTION

DATUM: N.A.V.D. 88

APPLICATION BY: GOVERNOR'S OFFICE OF STORM RECOVERY

APPLICATION NO.:

AGENT: COWI

PROPOSED CONSTRUCTION OF LIVING BREAKWATERS

WARD POINT BEND, RARITAN BAY
TOTTENVILLE, STATEN ISLAND
COUNTY OF RICHMOND
STATE OF NEW YORK

DATE: 10/30/2017

SHEET 20 OF 25

ATTACHMENT 1

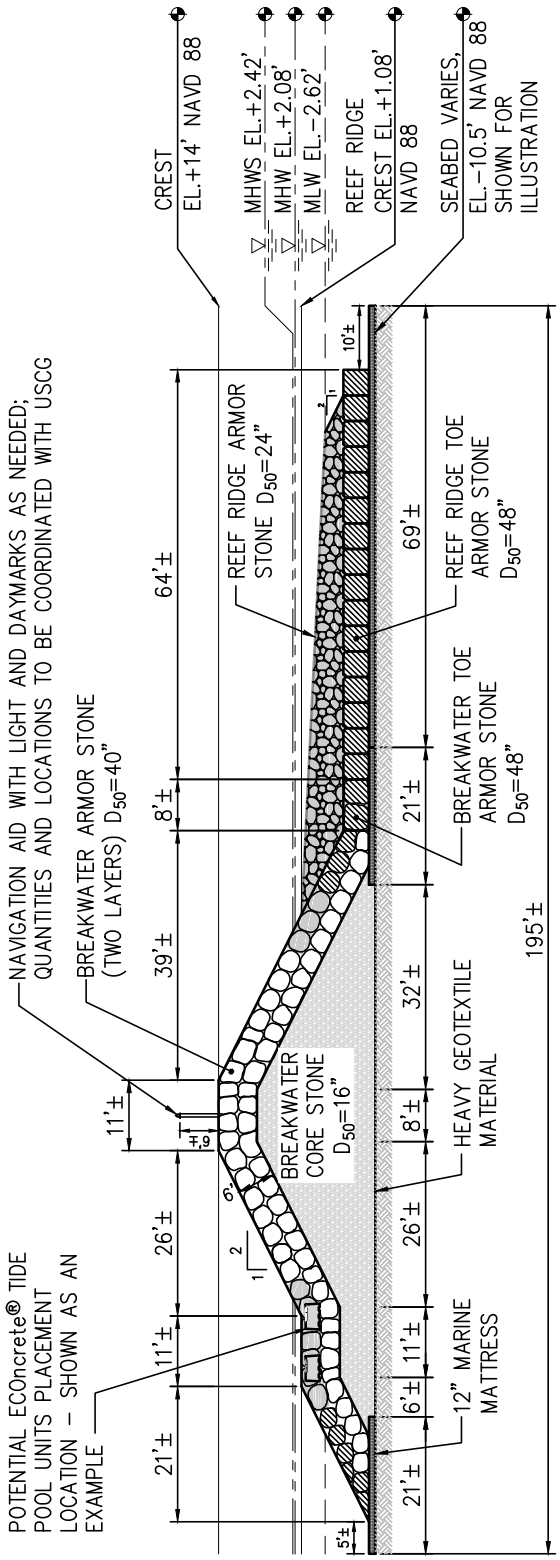

BREAKWATER TYPE 'C2' PROPOSED SECTION B–B

LEGEND

POTENTIAL LOCATION FOR ECOncrete® ARMOR UNITS

POTENTIAL LOCATION FOR ECOncrete® TIDE POOL UNITS

NOTES:

1. WHERE POTENTIAL ECOncrete® ARMOR UNITS ARE INDICATED, ARMOR STONE WILL BE REPLACED WITH ECOncrete® ARMOR UNITS AT A RATE OF 30%; IN ALL OTHER LOCATIONS, ARMOR AND TOE UNITS WILL BE STONE OF THE SIZE INDICATED.
2. REFER TO SHEET 8 FOR BREAKWATER VOLUME SUMMARY.

0 30 60 FT.

SCALE 1"=30'-0"

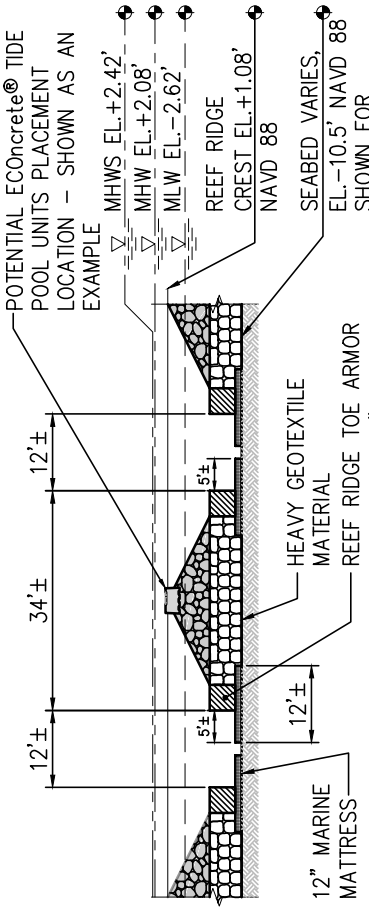

BREAKWATER TYPE 'C2' PROPOSED SECTION C–C

FOR PERMIT USE ONLY NOT FOR CONSTRUCTION	DATUM: N.A.V.D. 88 APPLICATION BY: GOVERNOR'S OFFICE OF STORM RECOVERY APPLICATION NO.: AGENT: COWI	PROPOSED CONSTRUCTION OF LIVING BREAKWATERS WARD POINT BEND, RARITAN BAY TOTTENVILLE, STATEN ISLAND COUNTY OF RICHMOND STATE OF NEW YORK DATE: 10/30/2017 SHEET 21 OF 25

ATTACHMENT 1

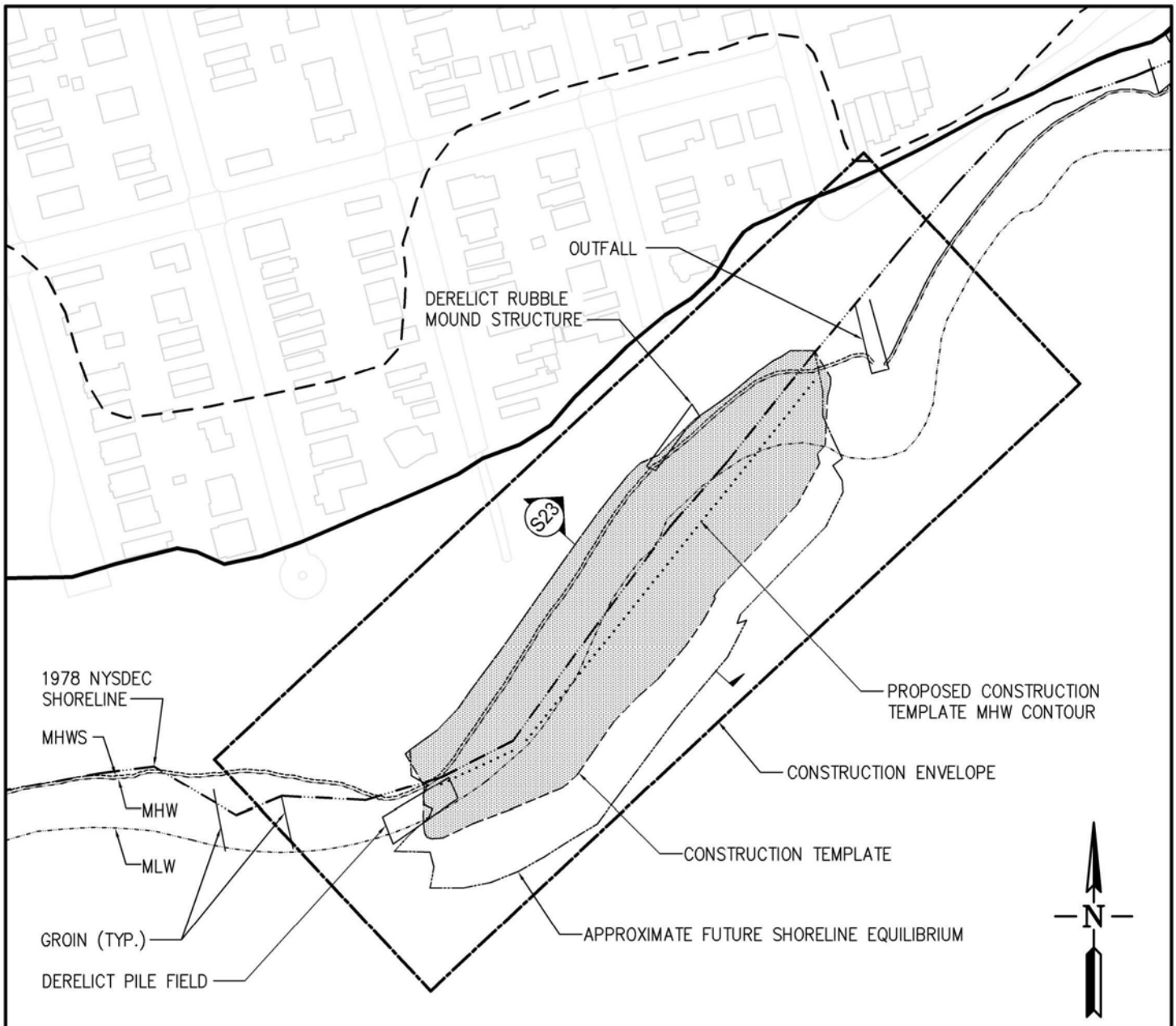

PROPOSED SHORELINE RESTORATION PLAN

0 200 400 FT.

SCALE 1"=200'-0"

LEGEND

- MEAN HIGH WATER SPRING
- MEAN HIGH WATER
- FEMA V-ZONE
- MEAN LOW WATER
- LiMWA
- 1978 NYSDEC SHORELINE
- CONSTRUCTION ENVELOPE
- PROPOSED SHORELINE RESTORATION (AS CONSTRUCTED)
- CONSTRUCTION TEMPLATE
- EQUILIBRIUM SHORELINE RESTORATION OUTLINE
- PROPOSED CONSTRUCTION TEMPLATE MHW CONTOUR

NOTES

1. CONSTRUCTION TEMPLATE OUTLINE REPRESENTS THE FOOTPRINT OF PLACED SAND.
2. EQUILIBRIUM SHORELINE RESTORATION OUTLINE REPRESENTS THE PROJECTED SPREAD OF THE CONSTRUCTION TEMPLATE.

FOR PERMIT USE ONLY
NOT FOR CONSTRUCTION

DATUM: N.A.V.D. 88

APPLICATION BY: GOVERNOR'S OFFICE OF STORM RECOVERY

APPLICATION NO.:

AGENT: COWI

PROPOSED CONSTRUCTION OF LIVING BREAKWATERS

WARD POINT BEND, RARITAN BAY
TOTTENVILLE, STATEN ISLAND
COUNTY OF RICHMOND
STATE OF NEW YORK

DATE: 10/30/2017 SHEET 22 OF 25

\\cowi.net\projects\A065000\A068233\CAD\A068233.2\Phase 3\Task 2\A068233 Permit Drawings\Permit 22 Shoreline Restoration Plan.dwg Permit 22 Michelle Saraswati Mon, 30 Oct 2017 – 2:51pm

ATTACHMENT 1

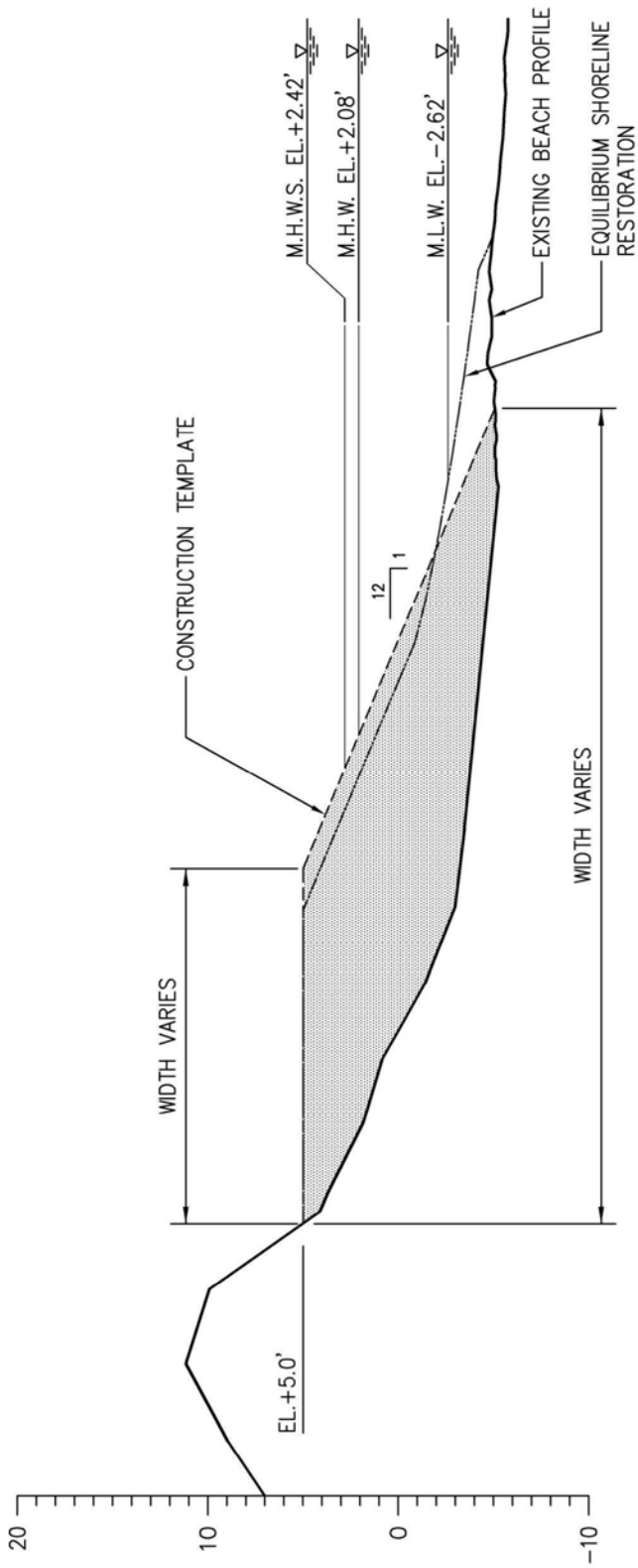

PROPOSED SHORELINE RESTORATION SECTION (TYPICAL)

NOTES:

1. SHORELINE RESTORATION FILL MATERIAL IS SAND WITH D50=0.3MM
2. CONSTRUCTION TEMPLATE OUTLINE REPRESENTS THE FOOTPRINT OF PLACED SAND.
3. EQUILIBRIUM SHORELINE RESTORATION OUTLINE REPRESENTS THE PROJECTED SPREAD OF THE CONSTRUCTION TEMPLATE.

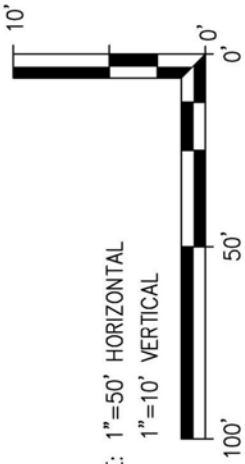

SCALE: 1"=50' HORIZONTAL
1"=10' VERTICAL

LEGEND

- CONSTRUCTION TEMPLATE
- EQUILIBRIUM SHORELINE RESTORATION
- SHORELINE RESTORATION FILL MATERIAL

FOR PERMIT USE ONLY
NOT FOR CONSTRUCTION

DATUM: N.A.V.D. 88

APPLICATION BY: GOVERNOR'S OFFICE OF STORM RECOVERY

APPLICATION NO.:

AGENT: COWI

PROPOSED CONSTRUCTION OF LIVING BREAKWATERS

WARD POINT BEND, RARITAN BAY
TOTTENVILLE, STATEN ISLAND
COUNTY OF RICHMOND
STATE OF NEW YORK

DATE: 10/30/2017

SHEET 23 OF 25

\\cowi.net\projects\A065000\A068233\CAD\A068233.2\Phase 3\Task 2\A068233 Permit Drawings\Permit 23 Shoreline Restoration Section.dwg Permit 23 Michelle Saraswati Mon, 30 Oct 2017 – 2:57pm

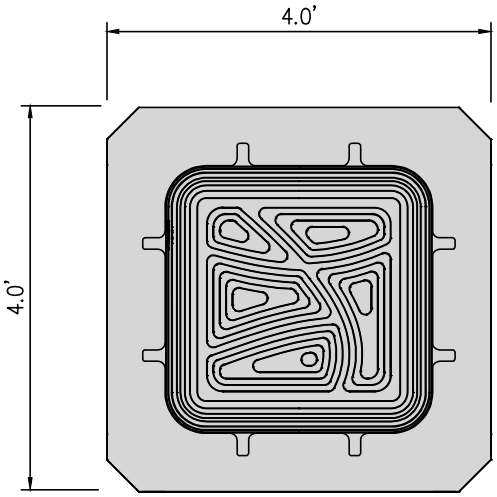

ELEVATION (FIVE SIDE, SIX SIDE FACING SEABED IS FLAT)

ECOncrete® ARMOR UNIT

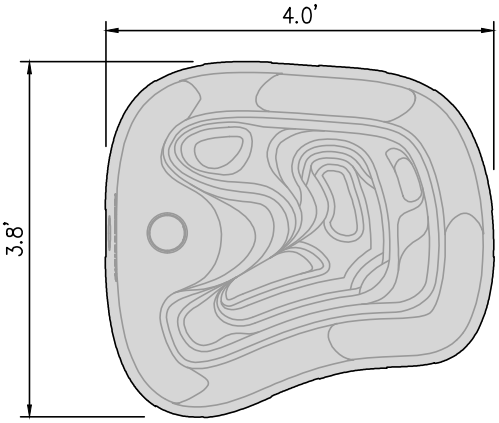

TOP VIEW

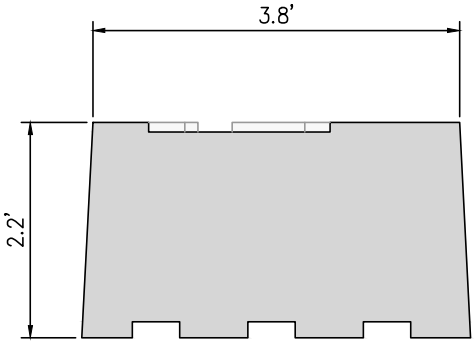

SIDE VIEW

ECOncrete® BIO-ACTIVE TIDE POOL

0 2 FT. 4 FT.

SCALE 1"=2'-0"

FOR PERMIT USE ONLY NOT FOR CONSTRUCTION	DATUM: N.A.V.D. 88 APPLICATION BY: GOVERNOR'S OFFICE OF STORM RECOVERY APPLICATION NO.: AGENT: COWI	PROPOSED CONSTRUCTION OF LIVING BREAKWATERS WARD POINT BEND, RARITAN BAY TOTTENVILLE, STATEN ISLAND COUNTY OF RICHMOND STATE OF NEW YORK DATE: 10/30/2017 SHEET 24 OF 25

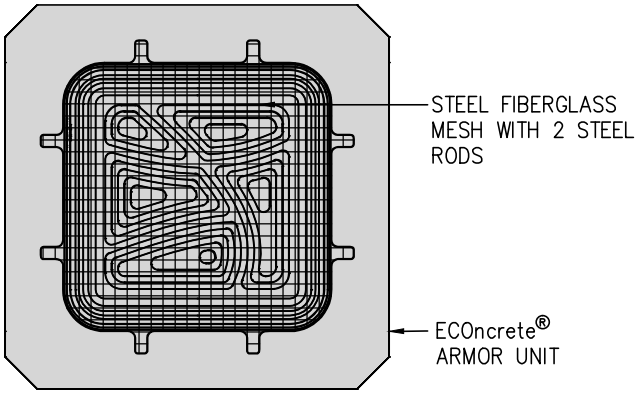

TREATMENT 1
MESH ONLY

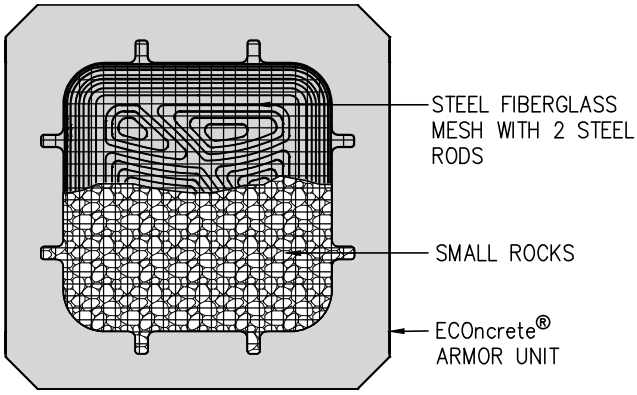

TREATMENT 2
MESH WITH SMALL ROCK

ECOncrete® TREATMENTS 1 & 2

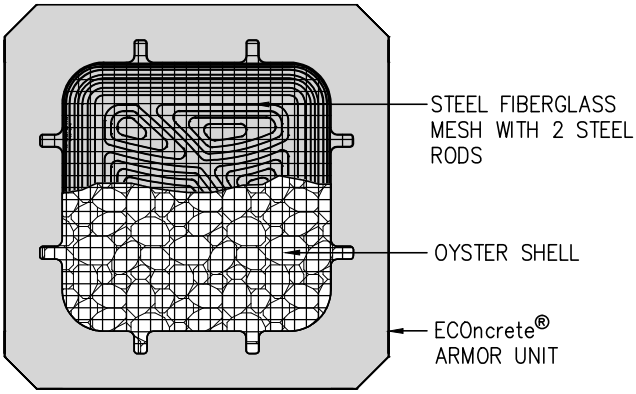

TREATMENT 3
MESH WITH SHELL

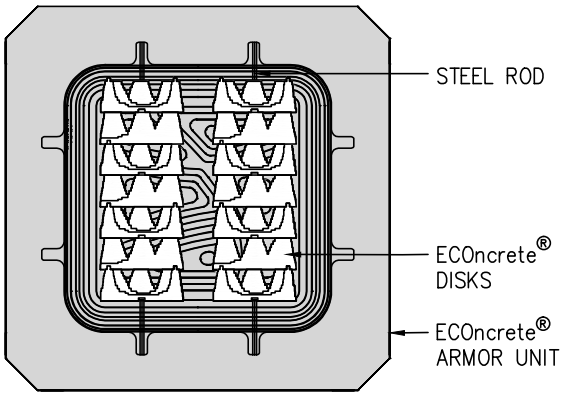

TREATMENT 4
ECOncrete DISKS

ECOncrete® TREATMENTS 3 & 4

0 2 FT. 4 FT.

SCALE 1"=2'-0"

FOR PERMIT USE ONLY NOT FOR CONSTRUCTION	DATUM: N.A.V.D. 88 APPLICATION BY: GOVERNOR'S OFFICE OF STORM RECOVERY APPLICATION NO.: AGENT: COWI	PROPOSED CONSTRUCTION OF LIVING BREAKWATERS WARD POINT BEND, RARITAN BAY TOTTENVILLE, STATEN ISLAND COUNTY OF RICHMOND STATE OF NEW YORK DATE: 10/30/2017 SHEET 25 OF 25

Appendix E-12
Essential Fish Habitat

Attachment 2

ATTACHMENT 2

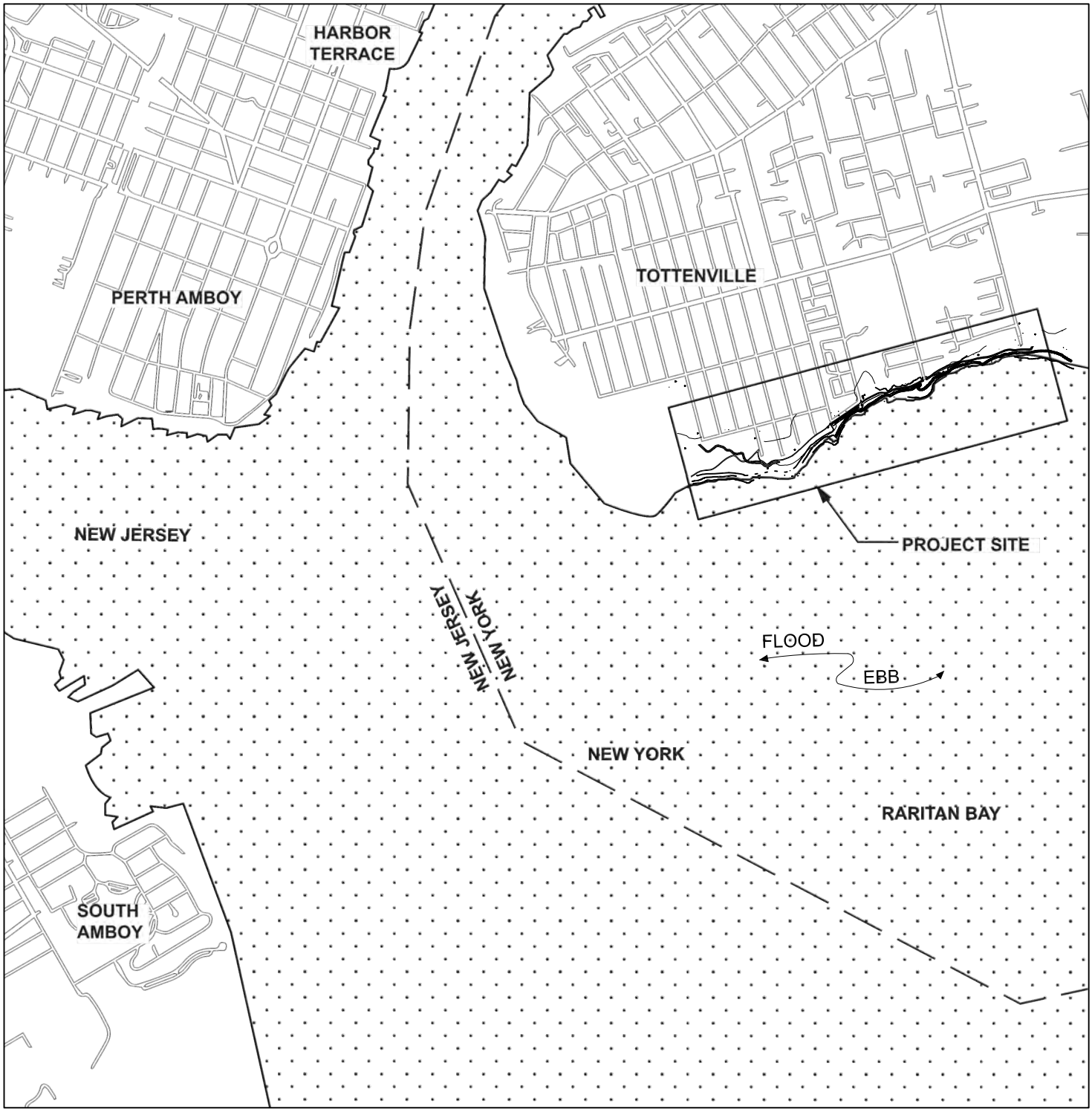

-500' 0 500' 1000' 2000' 4000'

SCALE: 1"=2000'

FILE:	DRAWING TITLE: VICINITY MAP	PROPOSED PROJECT: TOTTENVILLE SHORELINE PROTECTION PROJECT
	APPLICATION BY: GOVERNOR'S OFFICE OF STORM RECOVERY	
	DATUM: NAVD88	
	AGENT: STANTEC	IN: TOTTENVILLE STATEN ISLAND
FOR PERMIT USE ONLY NOT FOR CONSTRUCTION	DRAWING NO.: L-01	NEAR/AT: RARITAN BAY
	PAGE 1 OF 11 DATE 2/28/18	COUNTY: RICHMOND COUNTY
		STATE: NEW YORK

ATTACHMENT 2

PROJECT SITE ENLARGEMENT PLAN
EXISTING CONDITIONS

KEYMAP

MEAN HIGH WATER SPRING EL. +2.42 NAVD88
MEAN HIGH WATER EL. +2.08 NAVD88
MEAN LOW WATER EL. -2.62 NAVD88
NYSDEC TIDAL WETLANDS ADJACENT AREA (TWAA)
FRESH WATER WETLAND
DELINEATED WETLAND BOUNDARY
DOT RIGHT-OF-WAY
COASTAL EROSION HAZARD AREA (CEHA)

NOTE: ALL TIDAL DATA ARE BASED ON NOAA STATION NO. 8531680, SANDY HOOK, NJ.

FILE:	DRAWING TITLE: INDEX MAP EXISTING CONDITIONS	PROPOSED PROJECT: TOTTENVILLE SHORELINE PROTECTION PROJECT
	APPLICATION BY: GOVERNOR'S OFFICE OF STORM RECOVERY	
	DATUM: NAVD88	
	AGENT: STANTEC	IN: TOTTENVILLE STATEN ISLAND NEAR/AT: RARITAN BAY COUNTY: RICHMOND COUNTY STATE: NEW YORK
FOR PERMIT USE ONLY NOT FOR CONSTRUCTION	DRAWING NO.: L-02 PAGE 2 OF 11 DATE 2/28/18	

ATTACHMENT 2

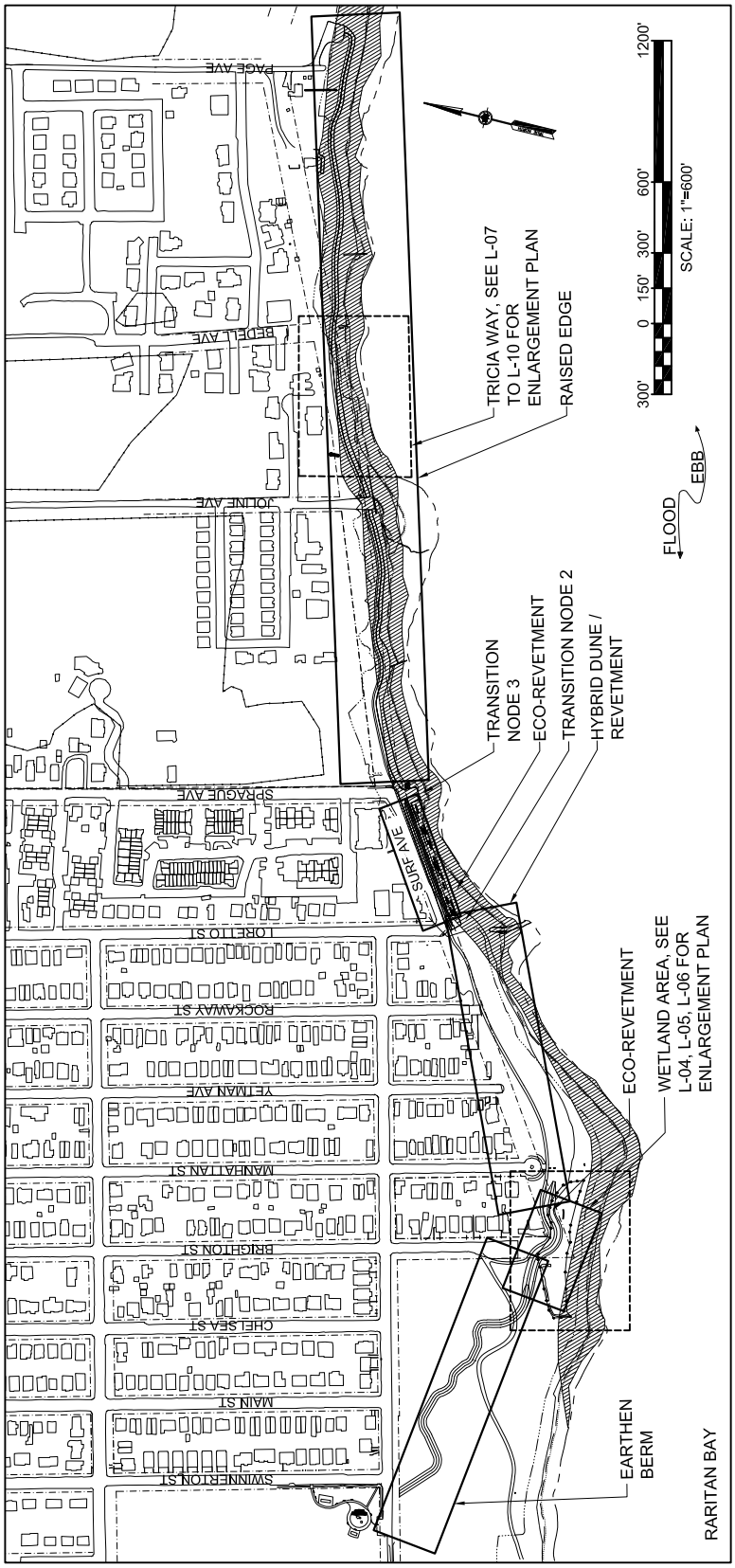

PROJECT SITE ENLARGEMENT PLAN
PROPOSED DESIGNS

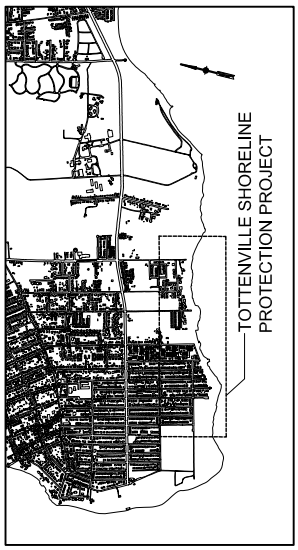

KEYMAP

- MEAN HIGH WATER SPRING EL. +2.42 NAVD88
- MEAN HIGH WATER EL. +2.08 NAVD88
- MEAN LOW WATER EL. -2.62 NAVD88
- NYSDEC TIDAL WETLANDS ADJACENT AREA (TWAA)
- FRESH WATER WETLAND
- DELINEATED WETLAND BOUNDARY
- DOT RIGHT-OF-WAY
- COASTAL EROSION HAZARD AREA (CEHA)

NOTE: ALL TIDAL DATA ARE BASED ON NOAA STATION NO. 8531680, SANDY HOOK, NJ.

FILE:

FOR PERMIT USE ONLY NOT FOR CONSTRUCTION

DRAWING TITLE: INDEX MAP
PROPOSED DESIGN

APPLICATION BY:

GOVERNOR'S OFFICE OF STORM RECOVERY

DATUM: NAVD88

AGENT: STANTEC

DRAWING NO.: L-03

PAGE 3 OF 11 DATE 2/28/18

PROPOSED PROJECT:
TOTTENVILLE SHORELINE PROTECTION PROJECT

IN: TOTTENVILLE STATEN ISLAND
NEAR/AT: RARITAN BAY
COUNTY: RICHMOND COUNTY
STATE: NEW YORK

ATTACHMENT 2

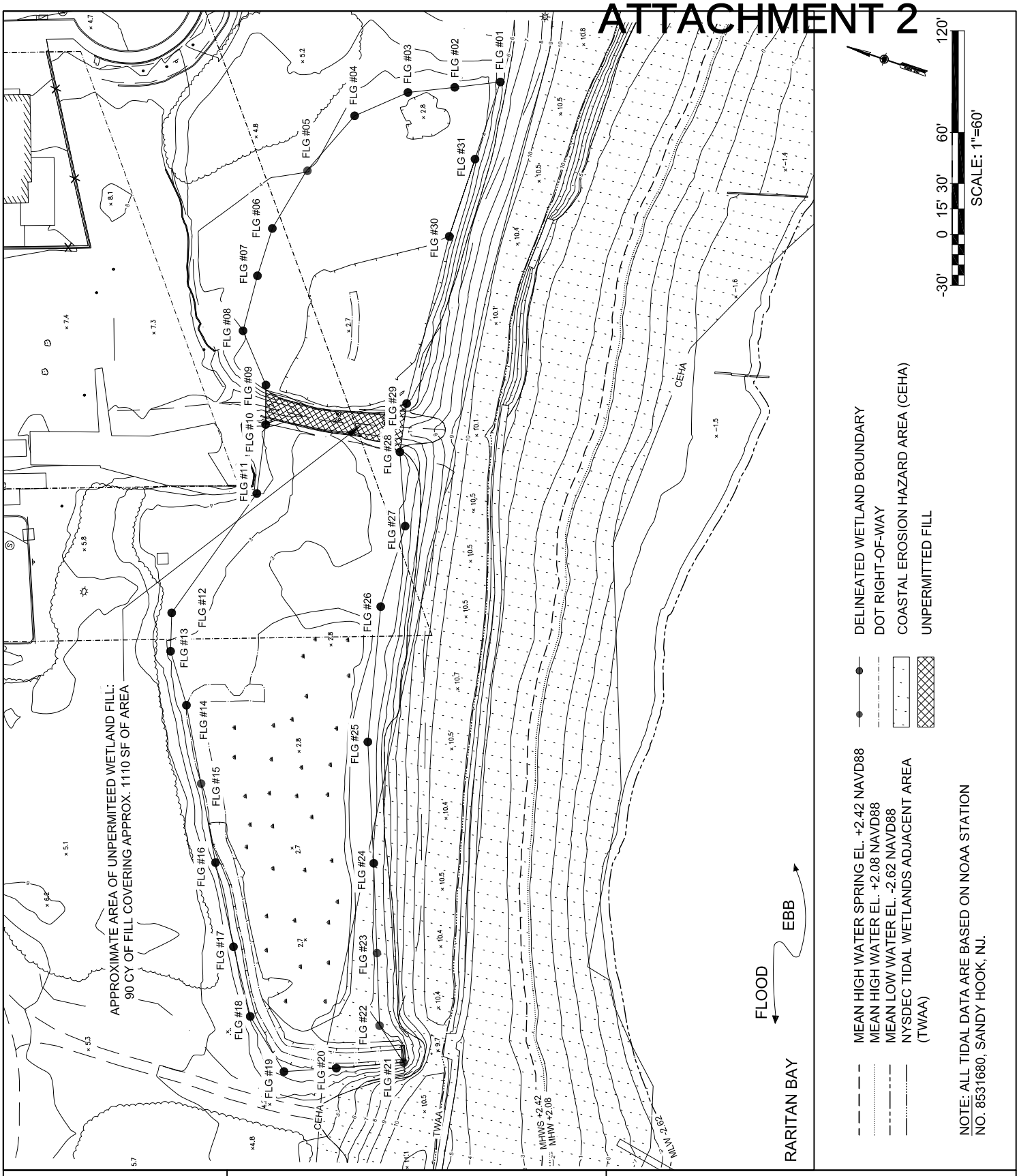

FILE:

FOR PERMIT USE ONLY NOT FOR CONSTRUCTION

DRAWING TITLE: TOPOGRAPHIC SURVEY WETLAND AREA

APPLICATION BY:

GOVERNOR'S OFFICE OF STORM RECOVERY

DATUM: NAVD88

AGENT: STANTEC

DRAWING NO.: L-04

PAGE 4 OF 11 DATE 2/28/18

PROPOSED PROJECT:
TOTTENVILLE SHORELINE PROTECTION PROJECT

IN: TOTTENVILLE STATEN ISLAND
NEAR/AT: RARITAN BAY
COUNTY: RICHMOND COUNTY
STATE: NEW YORK

ATTACHMENT 2

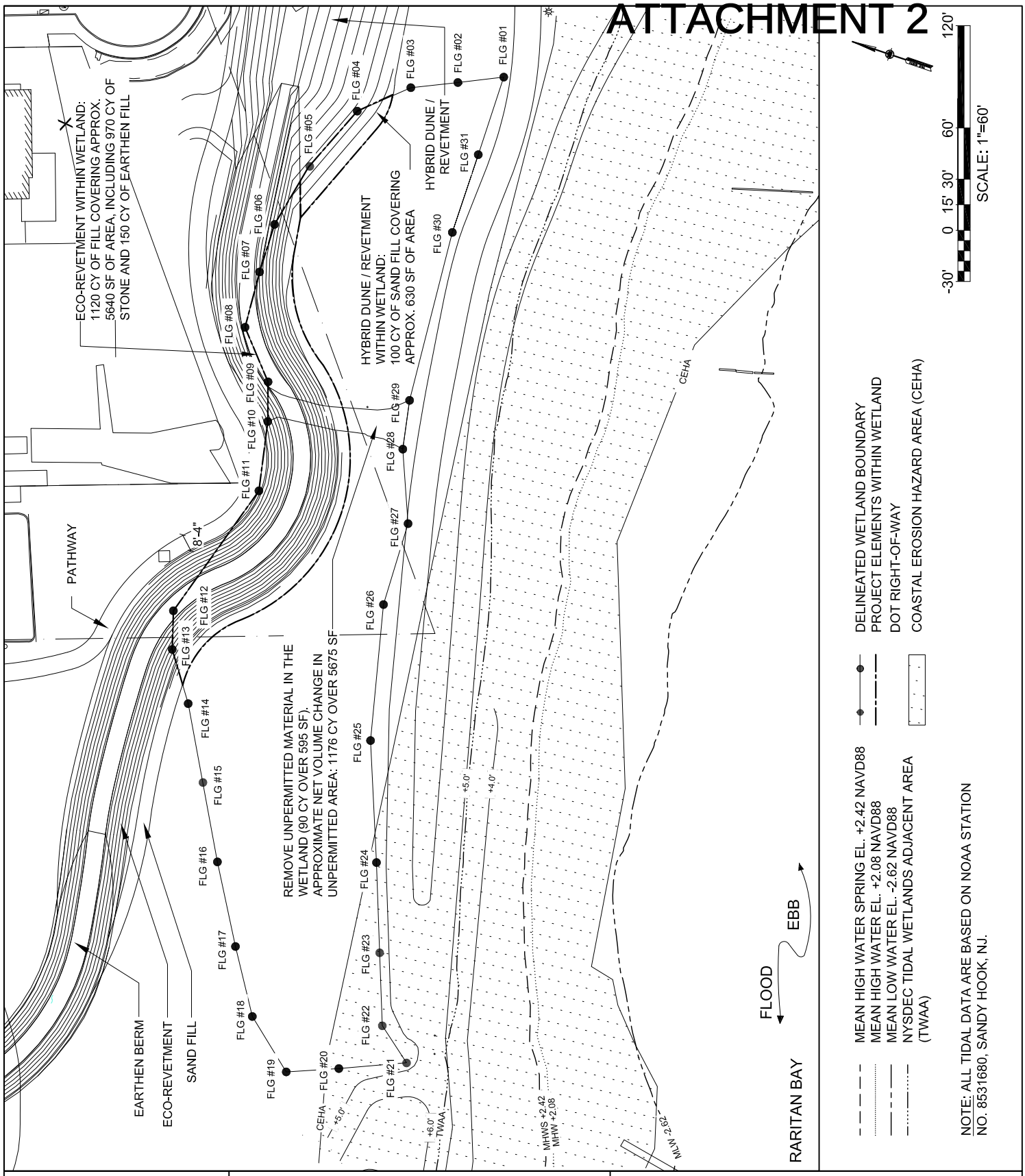

FILE:

FOR PERMIT USE ONLY NOT FOR CONSTRUCTION

DRAWING TITLE: GRADING PLAN
WETLAND AREA

APPLICATION BY:

GOVERNOR'S OFFICE OF STORM RECOVERY

DATUM: NAVD88

AGENT: STANTEC

DRAWING NO.: L-05

PAGE 5 OF 11 DATE 2/28/18

PROPOSED PROJECT:
TOTTENVILLE SHORELINE PROTECTION PROJECT

IN: TOTTENVILLE STATEN ISLAND
NEAR/AT: RARITAN BAY
COUNTY: RICHMOND COUNTY
STATE: NEW YORK

ATTACHMENT 2

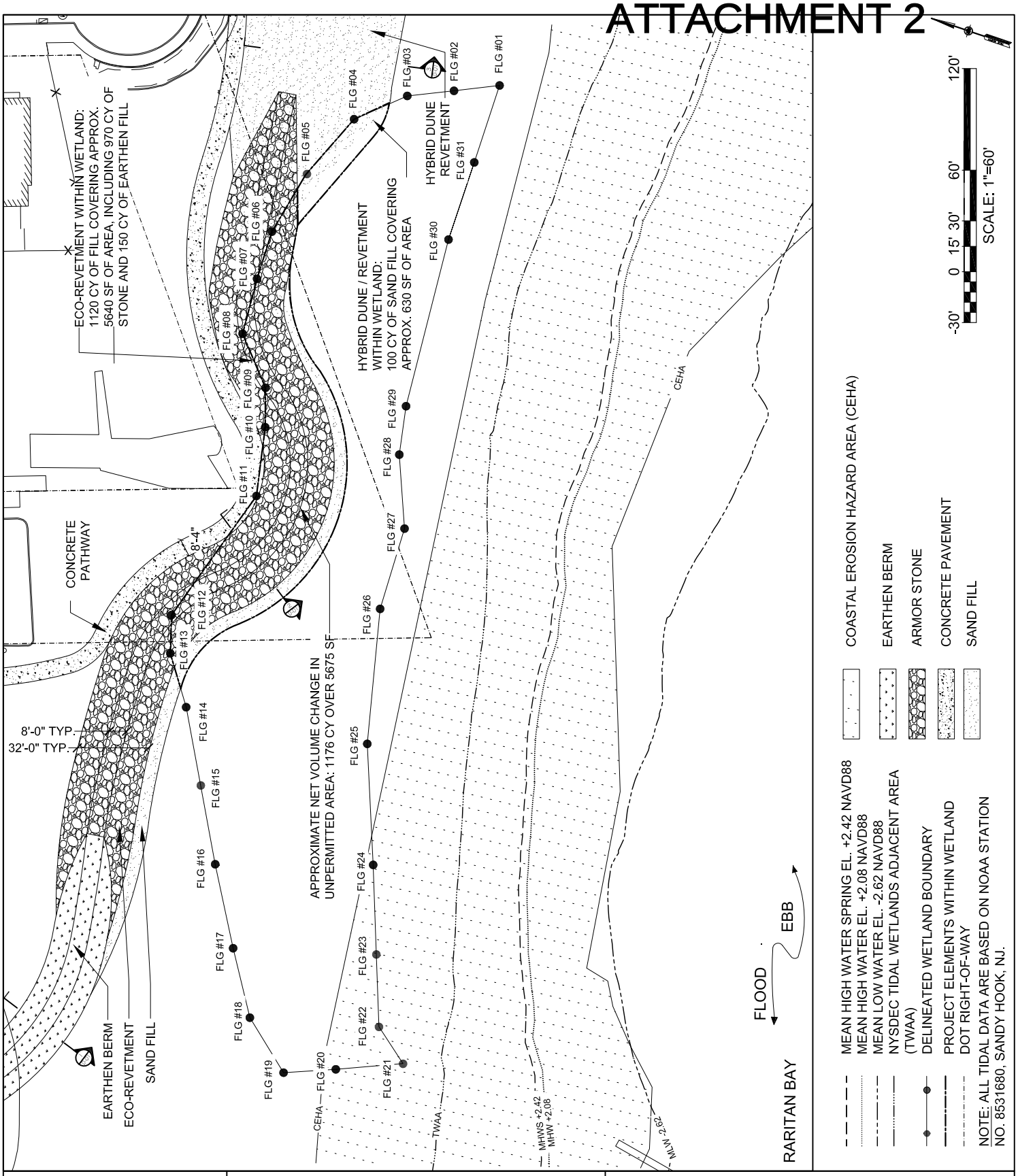

FILE:

FOR PERMIT USE ONLY NOT
FOR CONSTRUCTION

DRAWING TITLE: MATERIALS PLAN
WETLAND AREA

APPLICATION BY:

GOVERNOR'S OFFICE OF STORM RECOVERY

DATUM: NAVD88

AGENT: STANTEC

DRAWING NO.: L-06

PAGE 6 OF 11 DATE 2/28/18

PROPOSED PROJECT:
TOTTENVILLE SHORELINE PROTECTION PROJECT

IN: TOTTENVILLE STATEN ISLAND
NEAR/AT: RARITAN BAY
COUNTY: RICHMOND COUNTY
STATE: NEW YORK

ATTACHMENT 2

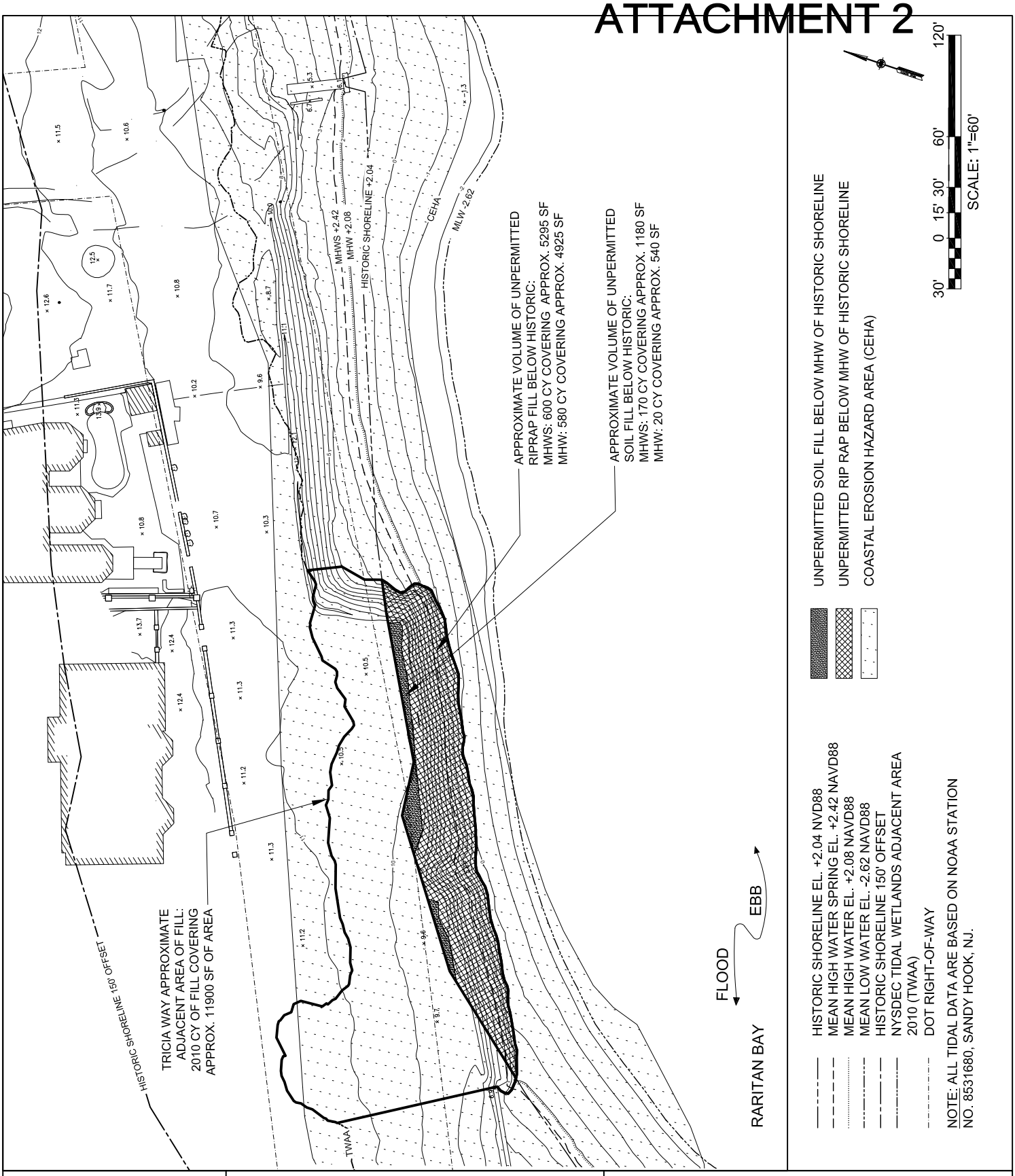

FILE:

FOR PERMIT USE ONLY NOT FOR CONSTRUCTION

DRAWING TITLE: TOPOGRAPHIC SURVEY TRICIA WAY

APPLICATION BY:

GOVERNOR'S OFFICE OF STORM RECOVERY

DATUM: NAVD88

AGENT: STANTEC

DRAWING NO.: L-07

PAGE 7 OF 11 DATE 2/28/18

PROPOSED PROJECT:
TOTTENVILLE SHORELINE PROTECTION PROJECT

IN: TOTTENVILLE STATEN ISLAND
NEAR/AT: RARITAN BAY
COUNTY: RICHMOND COUNTY
STATE: NEW YORK

ATTACHMENT 2

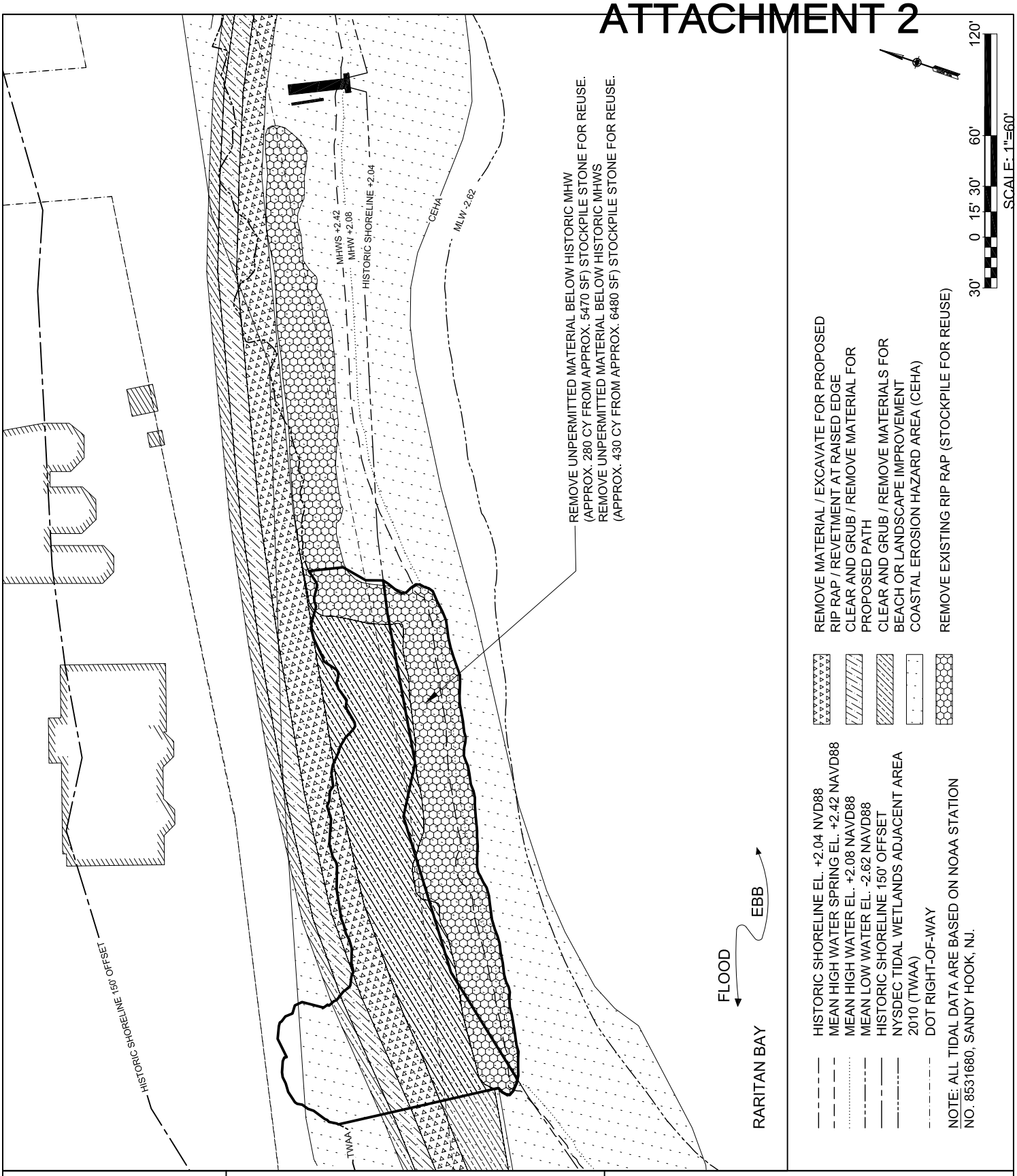

FILE:

FOR PERMIT USE ONLY NOT FOR CONSTRUCTION

DRAWING TITLE: REMOVAL PLAN
TRICIA WAY

APPLICATION BY:

GOVERNOR'S OFFICE OF STORM RECOVERY

DATUM: NAVD88

AGENT: STANTEC

DRAWING NO.: L-08

PAGE 8 OF 11 DATE 2/28/18

PROPOSED PROJECT:
TOTTENVILLE SHORELINE PROTECTION PROJECT

IN: TOTTENVILLE STATEN ISLAND
NEAR/AT: RARITAN BAY
COUNTY: RICHMOND COUNTY
STATE: NEW YORK

ATTACHMENT 2

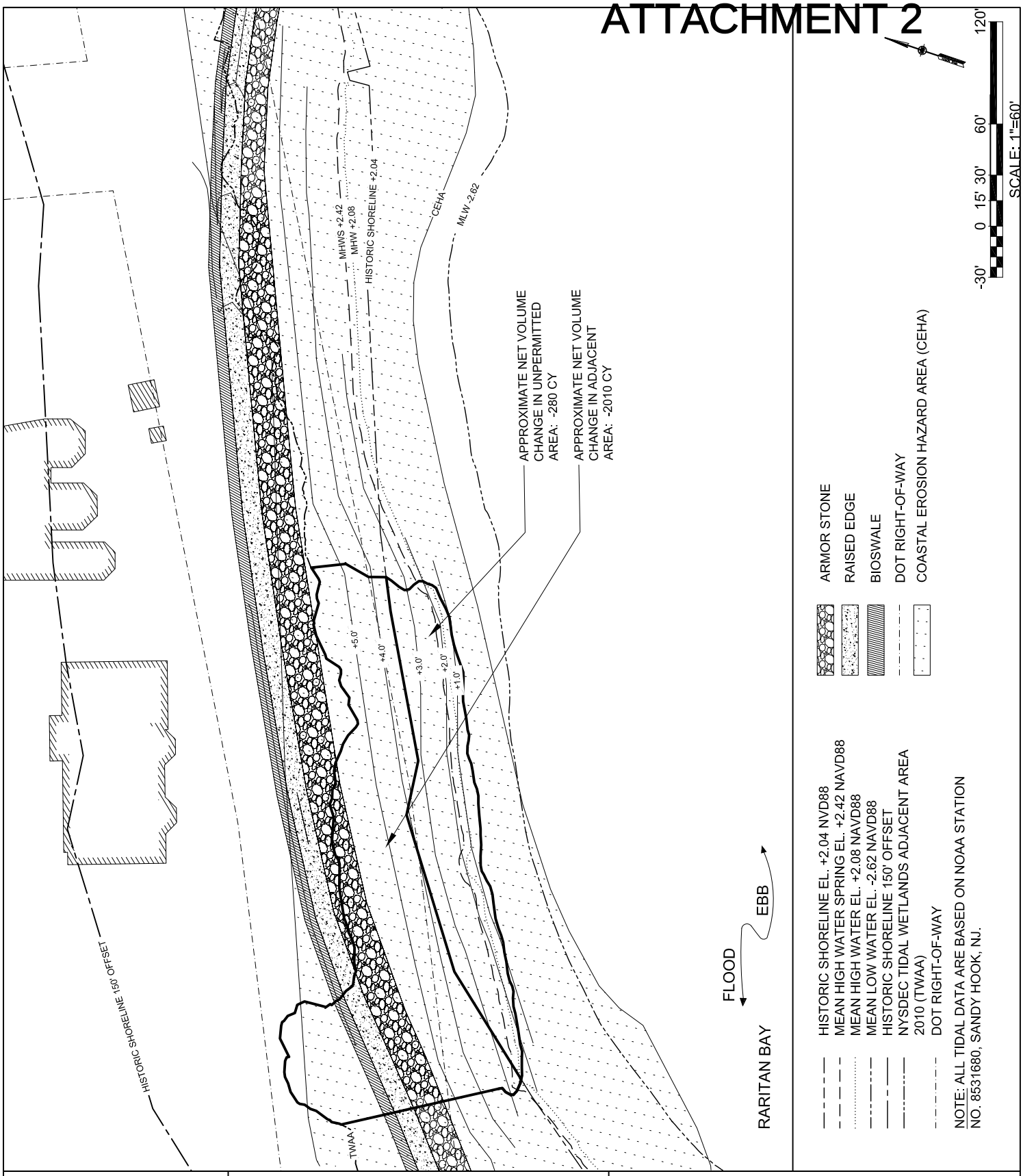

FILE:

FOR PERMIT USE ONLY NOT FOR CONSTRUCTION

DRAWING TITLE: GRADING PLAN TRICIA WAY

APPLICATION BY:

GOVERNOR'S OFFICE OF STORM RECOVERY

DATUM: NAVD88

AGENT: STANTEC

DRAWING NO.: L-09

PAGE 9 OF 11 DATE 2/28/18

PROPOSED PROJECT:
TOTTENVILLE SHORELINE PROTECTION PROJECT

IN: TOTTENVILLE STATEN ISLAND
NEAR/AT: RARITAN BAY
COUNTY: RICHMOND COUNTY
STATE: NEW YORK

ATTACHMENT 2

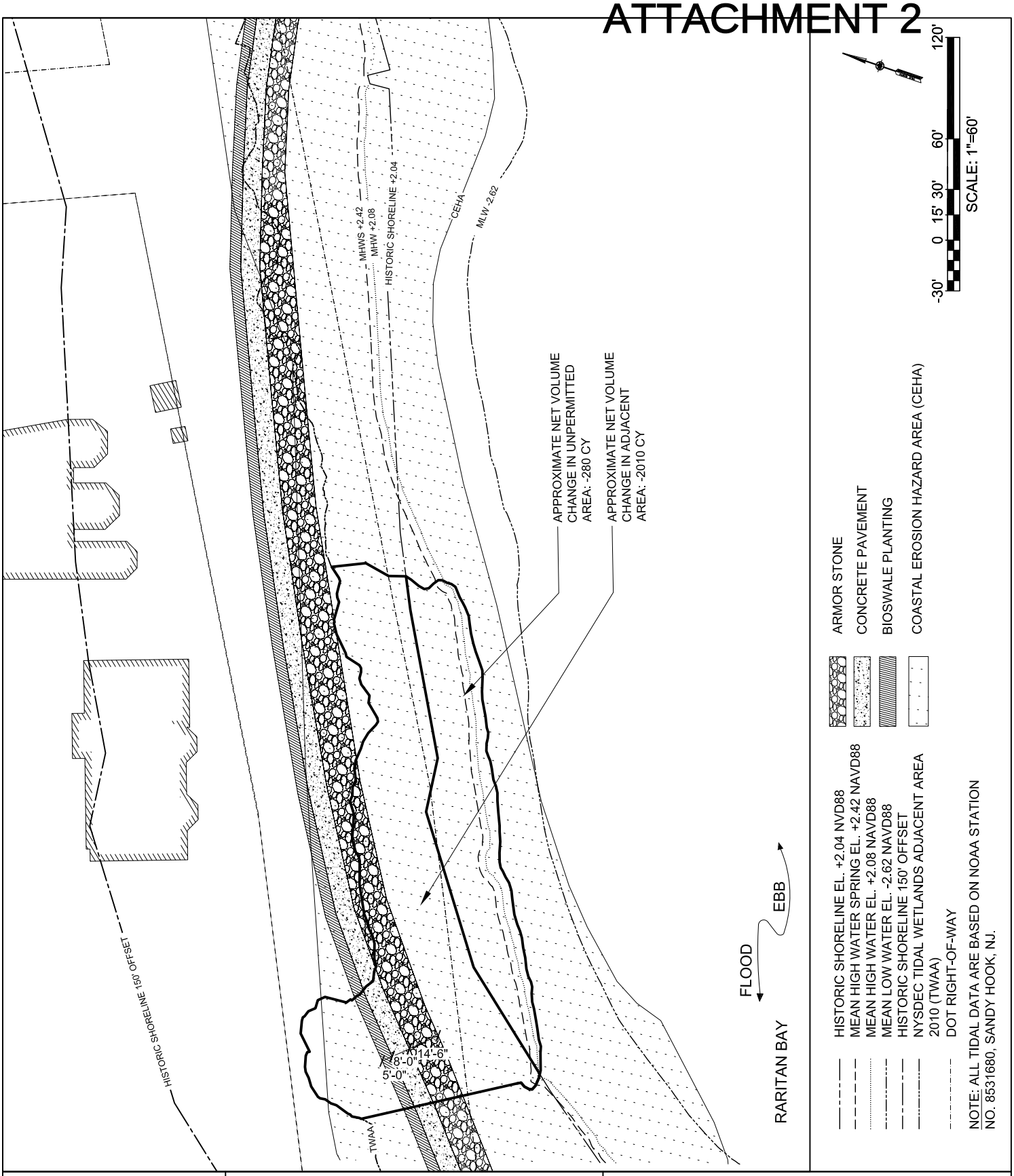

FILE:

FOR PERMIT USE ONLY NOT FOR CONSTRUCTION

DRAWING TITLE: MATERIALS PLAN
TRICIA WAY

APPLICATION BY:

GOVERNOR'S OFFICE OF STORM RECOVERY

DATUM: NAVD88

AGENT: STANTEC

DRAWING NO.: L-10

PAGE 10 OF 11 DATE 2/28/18

PROPOSED PROJECT:
TOTTENVILLE SHORELINE PROTECTION PROJECT

IN: TOTTENVILLE STATEN ISLAND
NEAR/AT: RARITAN BAY
COUNTY: RICHMOND COUNTY
STATE: NEW YORK

ATTACHMENT 2

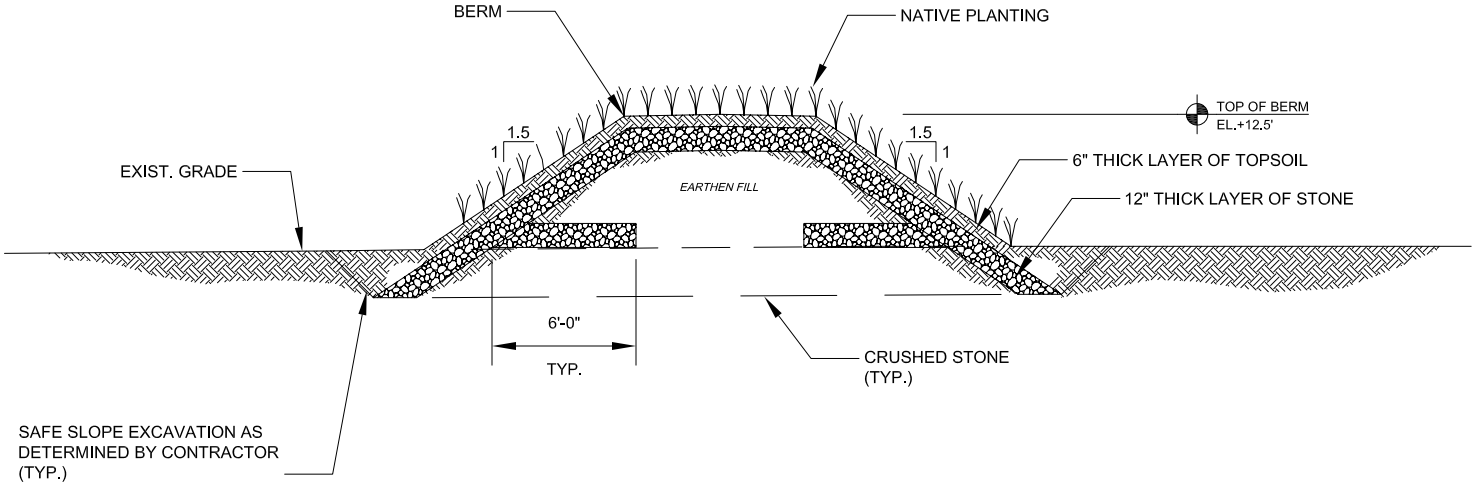

1 D-01 EARTHEN BERM

SCALE: 1/8"=1'-0" 0 4 8 SCALE IN FEET

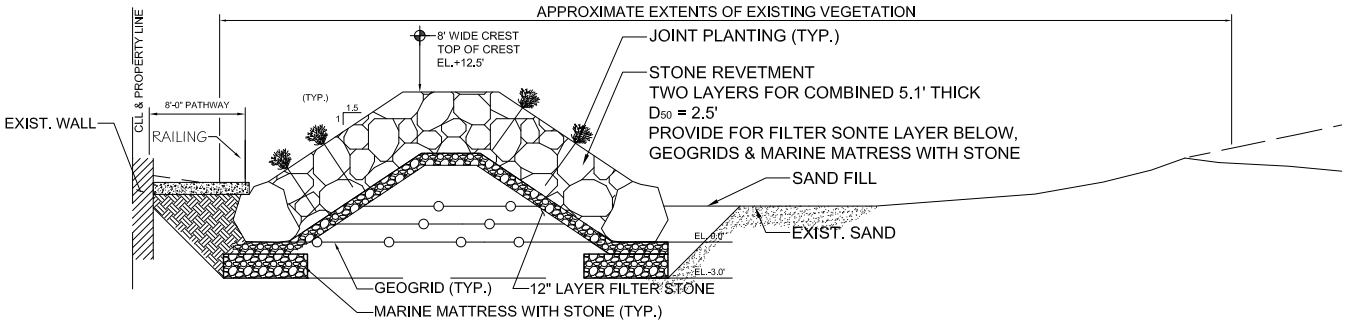

2 D-01 WETLAND AREA ECO-REVETMENT

SCALE: 1/16"=1'-0" 0 4 8 SCALE IN FEET

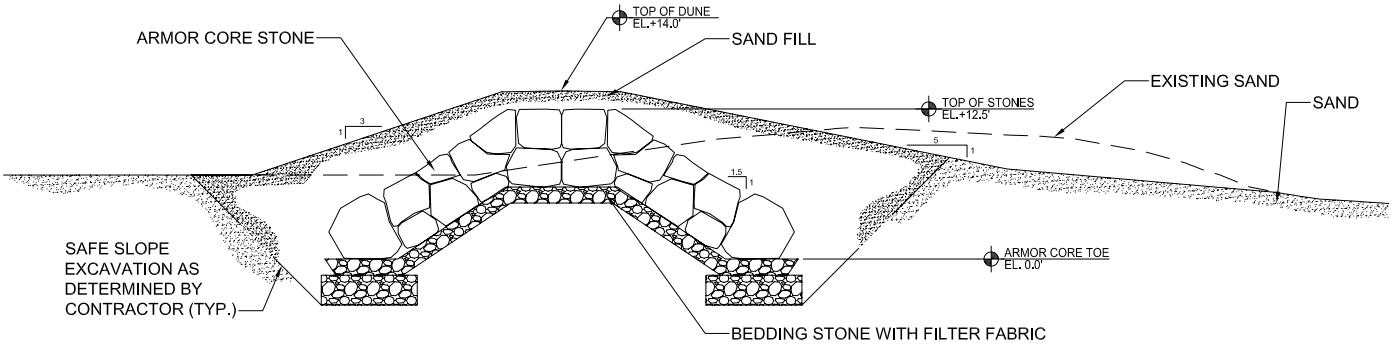

3 D-01 HYBRID DUNE / REVETMENT

SCALE: 1/16"=1'-0" 0 4 8 SCALE IN FEET

FILE:	DRAWING TITLE: DETAILS	PROPOSED PROJECT: TOTTENVILLE SHORELINE PROTECTION PROJECT
	APPLICATION BY: GOVERNOR'S OFFICE OF STORM RECOVERY	
	DATUM: NAVD88	
	AGENT: STANTEC	IN: TOTTENVILLE STATEN ISLAND
FOR PERMIT USE ONLY NOT FOR CONSTRUCTION	DRAWING NO.: D-01	NEAR/AT: RARITAN BAY
	PAGE11 OF 11 DATE 2/28/18	COUNTY: RICHMOND COUNTY
		STATE: NEW YORK

Appendix E-12
Essential Fish Habitat Consultation

UNITED STATES DEPARTMENT OF COMMERCE
National Oceanic and Atmospheric Administration
NATIONAL MARINE FISHERIES SERVICE
GREATER ATLANTIC REGIONAL FISHERIES OFFICE
55 Great Republic Drive
Gloucester, MA 01930-2276

MAY 22 2017

Daniel Greene
General Counsel and Certifying Officer
New York State Governor's Office of Storm Recovery
25 Beaver Street
New York, NY 10004

RE: Coastal and Social Resiliency Initiatives for Tottenville Shoreline, Staten Island, New York
Essential Fish Habitat Assessment

Dear Mr. Greene:

We have reviewed the April 2017 essential fish habitat assessment (EFH) for the Coastal and Social Resiliency Initiatives for Tottenville Shoreline, Staten Island, New York. The project area consists of the southeastern coast of Staten Island and the adjacent waters of Raritan Bay. The preferred alternative for the project includes two components, the Living Breakwaters Project (Breakwaters Project) and the Tottenville Shoreline Protection Project (Shoreline Project), designed to reduce wave action and coastal erosion along the shoreline in Tottenville.

The Breakwaters Project was developed as part of the U.S. Department of Housing and Urban Development (HUD) sponsored design competition, Rebuild-by-Design, and consists of ten breakwaters placed 500 – 2100 ft from the shoreline, grouped into three sections by design type, totaling 3900 linear feet (lf). The total proposed breakwater footprint is 551,094 ft^2, or 12.7 acres, with 197,164 cubic yards (cy) of hard structure, including 150,685 cy below mean high water (MHW). Also proposed are a 30 ft x 50 ft seasonal floating dock and two 10 ft x 300 ft floating oyster nursery structures associated with the breakwater system, and an 8 ft x 210 ft seasonal shore-based floating dock. An additional five acres of benthic habitat will be impacted by augmentation with oyster spat-on-shell for oyster restoration as part of the associated Billion Oysters Project. The Breakwaters Project also includes a one-time sand placement, from an upland source, along 806 lf of shoreline with an area of 3.8 acres, including 2.0 acres below MHW.

The Shoreline Project includes shoreline restoration components such as an earthen berm, hybrid dune system, eco-revetment, a raised edge with a revetment, wetland enhancements, and landscaping with coastal plant species. All components are above mean high water (MHW) with the exception of a portion of the hybrid dune system and the bridge between the earthen berm and hybrid dune, which would be constructed within a 0.8-acre delineated tidal wetland.

Magnuson Stevens Fisheries Management and Conservation Act (MSA)
The project area has been designated as EFH for a number of federally managed species

including Atlantic butterfish (*Peprilus triacanthus*), Atlantic mackerel (*Scomber scombrus*), Atlantic sea herring (*Clupea harengus*), bluefish (*Pomatomus saltatrix*), black sea bass (*Centropristis striata*), clearnose skate (*Raja eglanteria*), cobia (*Rachycentron canadum*), king mackerel (*Scomberomorus cavalla*), little skate (*Leucoraja erinacea*), red hake (*Urophycis chuss*), scup (*Stenotomus chrysops*), Spanish mackerel (*Scomberomorus maculates*), summer flounder (*Paralichthys dentatus*), windowpane flounder (*Scophthalmus aquosus*), winter flounder (*Pseudopleuronectes americanus*), and winter skate (*Leucoraja ocellata*).

The MSA requires federal agencies to consult us on project such as this that may affect EFH adversely. This process is guided by the requirements of our EFH regulation at 50 CFR 600.905, which mandates the preparation of EFH assessments, lists the required contents of EFH assessments, and generally outlines each agency's obligations in this consultation procedure.

The EFH final rule published in the Federal Register on January 17, 2002 defines an adverse effect as "any impact which reduces the quality and/or quantity of EFH" and further states that:

> An adverse effect may include direct or indirect physical, chemical, or biological alterations of the waters or substrate and loss of, or injury to, benthic organisms, prey species and their habitat, and other ecosystems components, if such modifications reduce the quality and/or quantity of EFH. Adverse effects to EFH may result from action occurring within EFH or outside EFH and may include site-specific or habitat-wide impacts, including individual, cumulative, or synergistic consequences of actions.

The EFH assessment provided to us for this project does not evaluate fully how the project components, both individually and cumulatively, will affect federally managed species, their EFH, and the ecology of Raritan Bay. The construction of the breakwater system will result in a loss of 12.7 acres of benthic habitat in the bay. The surface area of the rock and concrete structures comprising the breakwater system was calculated as 28.3 acres of subtidal and 12.9 acres of intertidal rocky habitat. It is proposed that this will offset the loss of benthic habitat resulting from the breakwater construction. These values were calculated based on studies conducted in the project area and engineering design principles of breakwater structures, which estimated that 70% of the exposed surface area will be available as habitat for local aquatic biota. However, because 150,685 cy of rock and concrete will be placed below MHW for the construction of the breakwaters, the loss of volume of open water habitat above the substrate should also be considered an impact from the project. Additionally, because one of the goals of the breakwater system is to promote accretion of sediment between the breakwaters and the shore that area will eventually be lost as shallow water habitat for EFH species. Modeling of anticipated accretion would provide us with an estimate of the speed with which that will occur.

Several sampling events were conducted in 2015 to evaluate the fish and benthic communities (including shellfish) in the project area. Sampling was also conducted on nearby artificial structures to quantify the colonization of communities that are anticipated to grow on the proposed breakwater system. While the fish and benthic sampling protocol was extensive, it provides only a one-year "snapshot" of the community ecology of the area. The horseshoe crab sampling was coupled with ongoing community assessments to provide evidence that horseshoe crabs spawn on the beach portion of the project area. However, given the scope of the project as

well as the permanent impacts to the ecosystem, it is essential to provide a more comprehensive baseline assessment of the community ecology of the project area. To that end, we recommend additional sampling for 2017, preferably repeating some of the sampling protocol from 2015. We can work with your office to evaluate the most appropriate parts of the protocol to repeat for 2017.

The construction of the hybrid dune system and wetland bridge will permanently impact 0.17 acres of a 0.80-acre delineated tidal wetland. Modification of the inlet to the wetland to improve hydrology is proposed as an offset for the loss. However, additional details should be provided to demonstrate that the impacts to the wetlands have been avoided and minimized to the maximum extent practicable. In addition, information should be provided to demonstrate that the hydrologic modifications will enhance the existing wetlands and that these enhancements are sufficient to offset the permanent loss of aquatic habitat.

Because the EFH assessment provided for this project does not assess fully the adverse effects to EFH that will result from the construction of this project, we must consider the assessment to be incomplete. Based upon the scope of the project and the potential significant impacts to EFH and other aquatic resources that may result from its construction, an expanded EFH consultation as described in 50 CFR 600.920 (f) is warranted. An expanded consultation process allows the maximum opportunity for us to work together to review the action's impacts on EFH, and to develop EFH consultation recommendations. Under the expanded consultation procedures, we are allowed 60 calendar days to review, comment, and respond to the information that has been provided to us.

To initiate the expanded EFH consultation, a full and complete evaluation of the direct, indirect, individual and cumulative effects of the construction and operation of all of the project components on EFH should be provided. The required components of the EFH assessment include a description of the action; an analysis of the potential adverse effects of the action on EFH and the managed species; the federal agency's conclusions regarding the effects of the action on EFH; and proposed mitigation, if applicable. As part of the expanded consultation, the assessment should also include additional information such as results of on-site inspections, views of recognized experts, a review of pertinent literature, an analysis of alternatives and any other relevant information.

Aquatic Resources in the Project Area

Shallow Water Habitats

The shallow water habitats within the project area provide nursery and forage habitat for a variety of NOAA trust resources including alewife *(Alosa pseudoharengus),* American eel (*Anguilla rostrata*), Atlantic croaker *(Micropogonias undulatus),* Atlantic menhaden *(Brevoortia tyrannus),* spot *(Leiostomus xanthurus),* striped bass *(Morone saxatilis),* and weakfish (*Cynoscion regalis*), as well as federally managed species such as bluefish, summer flounder, and winter flounder. Important forage species such as mummichog *(Fundulus heteroclitus),* Atlantic silverside *(Menidia menidia),* inland silverside *(Menidia beryllina),* striped killifish *(Fundulus majalis)* and bay anchovy *(Anchoa mitchilli)* also use these areas. Mummichog, killifish, anchovies and other small fish and benthic organisms found in shallow water habitats provide a valuable food source for many of the commercially and recreationally valuable species

mentioned above including red hake, scup, striped bass, summer flounder, weakfish, and windowpane flounder.

Shellfish
Shellfish such as hard clam (*Mercenaria mercenaria*), soft shell clam (*Mya arenaria*), blue crab (*Callinectes sapidus*), and horseshoe crab (*Limulus polyphemus*) occur in the project area. In addition to their commercial value, shellfish have an important ecological role in the Raritan Bay/Sandy Hook Bay complex. Coen and Grizzle (2007) discuss the ecological value of shellfish habitat to a variety of federally managed species and species managed by the Atlantic States Marine Fisheries Commission (e.g. winter flounder, American eel) and have suggested its designation as EFH for federally managed species. As filter feeders, bivalves play a role in improving water quality in the bays, and serve as a food source for a variety of fish that feed on their siphons. Infaunal species such as clams filter significant volumes of water, effectively retaining organic nutrients from the water column (Nakamura and Kerciku 2000; Forster and Zettler 2004). Clams are a prey species for a number of federally managed fish including bluefish, skates, summer flounder, and windowpane, and siphons of hard clams provide a food source for winter flounder and scup in the Hudson-Raritan Estuary (Steimle et al. 2000).

Raritan Bay provides spawning, nursery, foraging, and overwintering habitat for blue crabs, which are commonly found in subtidal bottom habitats and are an important food resource for predatory fish and birds (Bain et al. 2007). Horseshoe crabs use multiple habitats along the shoreline of the project area, including subtidal bottoms, intertidal mudflats, and sandy beaches. They are a key food resource for a variety of estuarine organisms, and their eggs provide food for migrating red knots, a federally endangered bird (Botton et al. 2006).

Wetlands
Wetlands provide many important ecological functions including fish and wildlife habitat, food chain support, surface water retention or detention, groundwater recharge, and nutrient transformation, sediment retention and carbon sequestration. The primary production in wetlands forms the base of the food web that supports insects and forage fish that are then prey species for larger fish such as bluefish and summer flounder. Estuarine marshes and marsh creeks also refuge provide habitat for a number of federally manage species and their prey. Wetland creeks are especially important habitat for juvenile summer flounder (*Paralichthys dentatus*).

Potential Project Impacts
Breakwaters Project
The construction of the Breakwaters Project will impact the habitat for a variety of NOAA trust resources through the conversion of unconsolidated bottom habitat into rocky, structural habitat. Some species may benefit from this habitat conversion, while others may be affected adversely. For example, the construction of the Breakwaters Project will result in the loss of EFH for winter flounder. Winter flounder enter into spawning areas within mid-Atlantic estuaries when water temperatures begin to decline in the fall. Tagging studies show that most return repeatedly to the same spawning grounds (Lobell 1939, Saila 1961, Grove 1982 in Collette and Klein-MacPhee 2002). Winter flounder typically spawn in the winter and early spring, although the exact timing is temperature dependent and thus varies with latitude (Able and Fahay 1998), however movement into these spawning areas may occur earlier, generally from mid- to late November

through December (B. Phelan, personal communication 2014). Winter flounder have demersal eggs that sink and remain on the bottom until they hatch. After hatching, the larvae are initially planktonic, but following metamorphosis they assume an epibenthic existence. Winter flounder larvae are negatively buoyant (Pereira et al. 1999), and are typically more abundant near the bottom (Able and Fahay 1998). These life stages are less mobile and thus more likely to be adversely affected adversely by any impact to benthic habitat. The construction of the breakwater system will result in a permanent loss of winter flounder EFH associated with the footprint of the breakwater system, as well as an eventual loss of spawning habitat in the area between the breakwaters and mean low water on the beach due to sediment accretion.

As acknowledged in the EFH assessment, seasonal in-water work restrictions may be necessary to protect EFH and other NOAA trust resources. This includes a seasonal in-water work restriction from January 1 to May 31 for construction activities within EFH for winter flounder early life stages.

The placement of sand for beach nourishment on nesting beaches during horseshoe crab spawning season may adversely affect both the horseshoe crabs and the fish and shorebirds that depend upon them for food. A seasonal restriction on beach nourishment, as noted in the EFH assessment, may be necessary from April 15 to July 15 to protect horseshoe crab eggs and larvae.

Shoreline Project
The loss of wetlands as a result of this project could adversely affect EFH for a number of federally managed species through the loss of nursery, forage, and refuge habitat; the reduction in prey species; and primary production and water quality degradation from the reduction in sediment retention and pollution filtration. Vegetated wetlands are also considered to be special aquatic sites under the Clean Water Act. Because of their ecological value, impacts on these special aquatic sites should be avoided and minimized.

Compensatory Mitigation
As this project moves forward, additional information is needed on the impacts to aquatic habitats including open water and wetlands that would be lost permanently, impacted temporarily, or degraded as a result of this project. Depending upon the nature and scope of the impacts, compensatory mitigation may be needed to offset the loss of aquatic resource functions. If, through the review of a full and complete evaluation of the impacts of the proposed project, it is determined that compensatory mitigation is necessary, a mitigation plan should be developed in accordance with the federal final mitigation rules published in the Federal Register on April 10, 2008 (33 CFR Chapter 2 Part 332.4 (b)) and provided to us for review. The plan should explain how the proposed compensatory mitigation will offset the impacts to shallow open-water habitat, wetlands, and EFH. It should also include performance measures, success criteria, and a long-term monitoring and maintenance plan. The site protection mechanism and long-term land steward should also be identified.

Endangered Species Act
Federally listed species including the threatened loggerhead (*Caretta caretta*), and the endangered Kemp's ridley (*Lepidochelys kempi*), green (*Chelonia mydas*) and leatherback (*Dermochelys coriacea*) sea turtles and Atlantic sturgeon (*Acipenser oxyrhynchus*) may be

present in the project area. Our Protected Resources Division has received your request for consultation on this project and will be providing comments separately. Questions regarding the status of their review should be directed to Edith Carson at (978) 282-8490 or edith.carson@noaa.gov

Conclusion

As stated above, the EFH assessment provided for this project does not evaluate adequately all of the potential impacts to EFH that could result from the implementation of the proposed project. As the adverse effects of this project on EFH may be substantial, an expanded EFH consultation will be necessary so that site-specific EFH conservation recommendations may be developed. We look forward to our continued coordination with your office on this project as it moves forward. If you have any questions or need additional information, please do not hesitate to contact Ursula Howson at (732) 872-3116 or ursula.howson@noaa.gov.

Sincerely,

Karen Greene
Mid-Atlantic Field Office Supervisor

cc: NYD ACOE – S. Ryba
PRD – D. Marrone, E. Carson
NEFMC – T. Nies
MAFMC – C. Moore
ASMFC – L. Havel
NYDEC – D. McReynolds
EPA – S. Lamster
NOAA NEPA

Literature Cited

Able, K.W. and M.P. Fahey. 1998. The First Year in the Life of Estuarine Fishes of the Middle Atlantic Bight. Rutgers University Press. New Brunswick, NJ

Bain, M., J. Lodge, D.J. Suszkowski, D. Botkin, A. Brash, C. Craft, R. Diaz, K. Farley, Y. Gelb, J.S. Levinton, W. Matuszeski, F. Steimle, and P. Wilber. 2007. Target ecosystem characteristics for the Hudson Raritan Estuary: technical guidance for developing a comprehensive ecosystem restoration plan. A report to the Port Authority of NY/NJ. Hudson River Foundation, New York, NY.

Botton, M.L., R.E. Loveland, J.T. Tanacredi, and T. Itow. 2006. Horseshoe crabs (*Limulus polyphemus*) in an urban estuary (Jamaica Bay, New York) and the potential for ecological restoration. Estuaries Coasts, 29 (2006), pp. 820–830.

Coen L.D. and R.E. Grizzle. 2007. The importance of habitat created by molluscan shellfish to managed species along the Atlantic coast of the United States. Atlantic States Marine Fisheries Commission. Habitat Management Series #8.

Collette, B.B. and G. Klein-MacPhee. eds. 2002. Bigelow and Schroeder's fishes of the Gulf of Maine. Smithsonian Institution. Washington, D.C.

Forster S. and M.L. Zettler. 2004. The capacity of the filter-feeding bivalve *Mya arenaria* L. to affect water transport in sandy beds. Marine Biology 144:1183–1189.

Grove, C.A. 1982. Population biology of the winter flounder, *Pseudopleuronectes americanus*, in a New England estuary. M.S. thesis, University of Rhode Island, Kingston, 95 pp.

Lobell, M.J. 1939. A biological survey of the salt waters of Long Island. Report on certain fishes: Winter flounder (*Pseudopleuronectes americanus*). New York Conserv. Dept. 28th Ann. Rept. Suppl., Part I pp 63-96.

Nakamura Y. and F. Kerciku. 2000. Effects of filter-feeding bivalves on the distribution of water quality and nutrient cycling in a eutrophic coastal lagoon. Journal of Marine Systems 26(2):209-221.

Pereira, J. J., R. Goldberg, J. J. Ziskowski, P.L. Berrien, W.W. Morse and D.L. Johnson. 1999. Essential Fish Habitat Source Document: Winter Flounder, *Pseudopleuronectes americanus,* life history and habitat characteristics. U.S. Dep. Commer., NOAA Technical Memorandum NMFS-NE-138.

Phelan, B. Fisheries Biologist, NOAA/Northeast Fisheries Science Center, James J. Howard Marine Laboratory, Sandy Hook, NJ. Personal Communication, January 13, 2014.

Saila, S.B. 1961. The contribution of estuaries to the offshore winter flounder fishery in Rhode Island. *Proc. Gulf. Carib. Fish. Inst.* 14:95-109.

Steimle, F.W., R.A. Pikanowski, D.G. McMillan, C.A. Zetlin, and S.J. Wilk. 2000. Demersal fish and American lobster diets in the Lower Hudson-Raritan Estuary. NOAA Technical Memorandum NMFS-NE-161. Woods Hole, MA. 106 p.

UNITED STATES DEPARTMENT OF COMMERCE
National Oceanic and Atmospheric Administration
NATIONAL MARINE FISHERIES SERVICE
GREATER ATLANTIC REGIONAL FISHERIES OFFICE
55 Great Republic Drive
Gloucester, MA 01930-2276

MAY 8 - 2018

Daniel Greene
General Counsel and Certifying Officer
New York State Governor's Office of Storm Recovery
25 Beaver Street
New York, NY 10004

RE: Coastal and Social Resiliency Initiatives for Tottenville Shoreline, Staten Island, New York
Essential Fish Habitat Assessment and Final Environmental Impact Statement

Dear Mr. Greene:

We have reviewed the March 2018 EFH assessment and Final Environmental Impact Statement (FEIS) for the Coastal and Social Resiliency Initiatives for Tottenville Shoreline, Staten Island, New York. The project area consists of the southeastern coast of Staten Island and the adjacent waters of Raritan Bay. The preferred alternative for the preliminary 60 percent design of the project includes two components, the Living Breakwaters Project (Breakwaters Project) and the Tottenville Shoreline Protection Project (Shoreline Project), designed to reduce wave action and coastal erosion along the shoreline in Tottenville. The Breakwaters and Shoreline Projects were developed as part of the U.S. Department of Housing and Urban Development (HUD) sponsored design competition, Rebuild-by-Design, and have been revised since our previous letter of May 22, 2017. The New York State Governor's Office of Storm Recovery is the designated non-federal representative for HUD. HUD is ultimately responsible for complying with the requirements of this EFH consultation.

The Breakwaters Project now consists of nine breakwater segments, grouped into three sections by design type, with a total length of 3,200 linear feet (lf) within Raritan Bay and to be placed between 790 and 1,170 feet from the shoreline. The total proposed breakwater structure would occupy approximately 495,900 ft^2 (approximately 11.4 acres) on the bottom of Raritan Bay and result in the placement of 151,780 cubic yards (cy) of hard structure, including 115,990 cy below mean high water (MHW). Also proposed is a one-time sand placement, from an upland source, along 806 lf of shoreline with an area of 3.1 acres, including 2.6 acres below MHW. The Breakwaters Project also includes a "water hub" for community interactions, which would consist of a transient vessel which would anchor near the breakwater structures.

The Shoreline Project incorporates shoreline restoration components including an earthen berm, hybrid dune/revetment system, eco-revetments, a raised edge with a revetment and trail, wetland enhancements, and landscaping with coastal plant species. All components are above mean high water (MHW) with the exception of a portion of the hybrid dune system and the bridge between the earthen berm and hybrid dune, which would be constructed within a 0.8-acre delineated tidal wetland.

Magnuson Stevens Fisheries Management and Conservation Act (MSA)
As stated in our previous letter, the project area has been designated as EFH for a number of federally managed species. The MSA requires federal agencies, or their non-federal designee to consult us on project such as this that may adversely affect EFH adversely. The previous EFH assessment provided to us for this project did not fully evaluate all of the direct, indirect, individual and cumulative effects of the proposed actions and did not provide us with sufficient information for the development of EFH conservation recommendations.

The revised EFH assessment adequately evaluates how the project components, both individually and cumulatively, will affect federally managed species, their EFH, and the ecology of Raritan Bay. The construction of the breakwater system will result in a conversion of 11.4 acres of benthic habitat and the concomitant 115,990 cy of water column above the substrate to an equivalent area and volume of rocky/hard structure habitat. The proposed habitat conversion will occur over 11 months in a two-year period (6 months in Year 1, 5 months in Year 2). Construction of the breakwater system will also cause the permanent loss of approximately 3.6 acres of aquatic habitat, which corresponds to the combined area of breakwaters above MHW. This area of permanent loss will be mitigated with available credits from an approved mitigation bank and/or restoration or enhancement of comparable habitat within the Raritan Bay watershed.

The construction of the hybrid dune/revetment will permanently impact 0.14 acre of a 0.80-acre delineated tidal wetland. This wetland loss will be offset by the restoration and enhancement of the remaining wetland, including removal of unpermitted fill to improve hydrology, removal of the existing population of *Phragmites australis*, and planting of native salt marsh vegetation.

A loss of 2.6 acres of benthic habitat will occur during the one-time shoreline restoration. Recolonization of benthic organisms is expected to occur and the renourished beach may be used by spawning horseshoe crabs.

Mitigation
As this project moves forward, additional information is needed on the mitigation plans for impacts from the breakwaters and tidal wetlands fill. The mitigation plans should be developed in accordance with the federal final mitigation rules published in the Federal Register on April 10, 2008 (33 CFR Chapter 2 Part 332.4 (b)) and provided to us for review. The plans should explain how the proposed compensatory mitigation will offset the impacts to shallow open-water and benthic habitat, wetlands, and EFH. Each plan should also include performance measures, success criteria, and a long-term monitoring and maintenance plan. The site protection mechanism and long-term land steward should also be identified.

Essential Fish Habitat Conservation Recommendations
Pursuant to Section 305 (b) (4) (A) of the MSA, we recommend the following EFH conservation recommendations be incorporated into the project:

Breakwater Project

1. No in-water work from January 1 to May 31 to minimize adverse effects to winter flounder early life stages and their EFH.

2. A five year post-construction environmental and natural resource monitoring plan should be developed for the breakwaters and annual monitoring reports should be provided to our office for the duration of the plan.

3. Provide compensatory mitigation for the permanent loss of 3.6 acres of open water and benthic habitat as the result of breakwater construction. A detailed compensatory mitigation plan should be provided to our office for review and comment prior to permitting.

    - The detailed plan should be prepared in accordance with the requirements of the 2008 mitigation rules and should include performance measures, success criteria and a long-term monitoring and maintenance plan, as well as documentation that the conservation easement protecting the sites has been recorded and funding is in place for both the construction of the project and the maintenance of the site by the long-term land steward.

    - If credit purchase at a federally approved bank will be used as compensatory mitigation, documentation of credit availability should be provided.

Shoreline Project

4. In accordance with the 2008 federal mitigation rules, provide mitigation and a five year monitoring plan for the restoration of 0.66 acre of the on-site 0.8 acre tidal wetland, which is being provided as compensatory mitigation for the loss of 0.14 acre in the same tidal wetland.

5. No placement of material on the beach from April 15 to July 15 of each year to avoid impacts to horseshoe crab spawning. Horseshoe crab eggs and larvae are an important seasonal food source for many species such as summer flounder and winter flounder.

6. Use best management practices to minimize the release of suspended sediments during beach nourishment activities, including placement of the material above the spring high tide line at low tide where possible and using turbidity barriers where feasible.

All project components

7. All barges and vessels associated with the project must float at all tidal stages. This includes the floating Water Hub vessel.

Please note that Section 305(b)(4)(B) of the MSA requires you to provide us with a detailed written response to the EFH conservation recommendations, including a description of measures

you have adopted to avoid, mitigate, or offset the impact of the project on EFH. In the case of a response that is inconsistent with these conservation recommendations, Section 305(b)(4)(B) of the MSA also indicates that you must explain your reasons for not following the recommendations. Included in such reasoning would be the scientific justification for any disagreements with us over the anticipated effects of the proposed action and the measures needed to avoid, minimize, mitigate, or offset such effects pursuant to 50 CFR 600.920(k).

Please also note that a distinct and further EFH consultation must be reinitiated pursuant to 50 CFR 600.920(1) if new information becomes available or the project is revised in such a manner that affects the basis for the above EFH conservation recommendations.

Endangered Species Act
Our Protected Resources Division will be proving comments on this project separately. Questions regarding the status of their review should be directed to Edith Carson at (978) 282-8490 or edith.carson@noaa.gov

We look forward to our continued coordination with your office on this project as it moves forward. If you have any questions or need additional information, please do not hesitate to contact Ursula Howson in our Highlands, NJ field office at ursula.howson@noaa.gov or (732) 872-3116.

Sincerely,

Louis A. Chiarella
Assistant Regional Administrator
Habitat Conservation Division

cc: NYD ACOE – S. Ryba, M. Tymes
PRD – D. Marrone
NEFMC – T. Nies
MAFMC – C. Moore
ASMFC – L. Havel
NYDEC – D. McReynolds
EPA – S. Lamster
NOAA NEPA