Attachment 1

Project Location Maps

Street Map
Topographic Map
Aerial Photograph

Street Map

Tectonic

1:10,000

0 500 1,000 2,000 Feet

Canal Plaza Project
435 State Street
City of Binghamton
Broome County, New York

Topographic Map

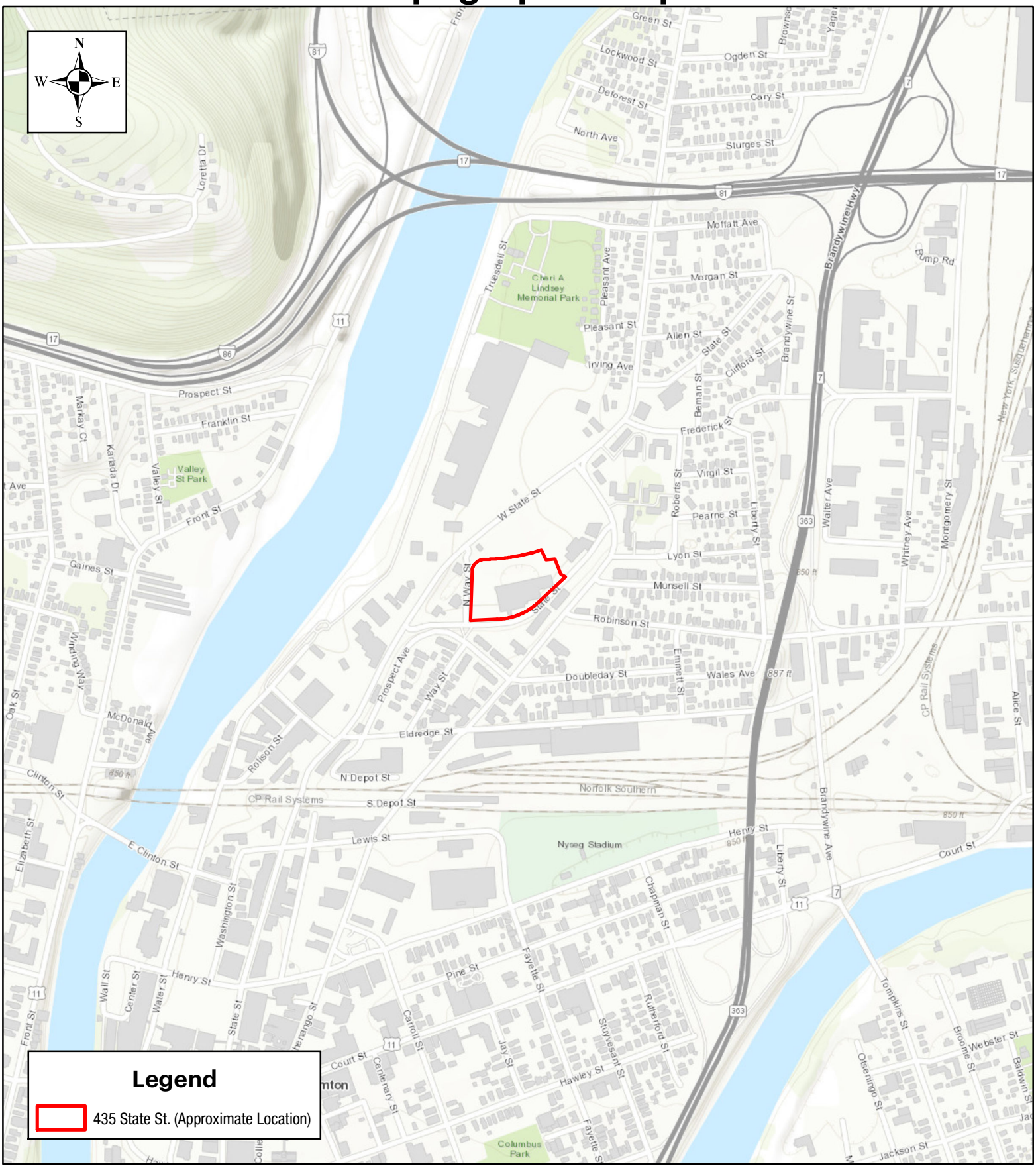

Tectonic

1:10,000

0 500 1,000 2,000 Feet

Canal Plaza Project
435 State Street
City of Binghamton
Broome County, New York

Aerial Map

Tectonic

1:10,000

0 500 1,000 2,000 Feet

Canal Plaza Project
435 State Street
City of Binghamton
Broome County, New York

Attachment 2

Project Design Plans

435 State Street Development Design Plans (10/12/2016)
Acknowledgement of Notice of Intent for coverage under
SPDES General Permit (7/12/2018)

EXISTING CONDITIONS & SITE PREPARATION NOTES

CLL — CONTRACT LIMIT LINE

REMOVE EXISTING PAVEMENTS - SEE NOTES 1 & 14 BELOW.

1. REMOVE EXISTING CONCRETE PAVEMENT.
2. REMOVE EXISTING TREE / SHRUB ROOTS AND STUMP IN ITS ENTIRETY.
3. RAISE RIM TO ELEVATION SHOWN ON GRADING PLAN.
4. SAWCUT ASPHALT OR CONCRETE PAVEMENT. SAWCUT ASPHALT IN NEAT STRAIGHT LINE AND SAWCUT CONCRETE PAVEMENT AT NEAREST SCORE JOINT.
5. EXISTING BUILDING PREVIOUSLY DEMOLISHED PER ARCHITECTURAL PLANS UNDER SEPARATE CONTRACT. EXISTING FOUNDATION WALLS MAY BE ENCOUNTERED.
6. EXISTING WATER SERVICE DISCONNECTED AND ABANDONED BY SEPARATE CONTRACT. EXISTING WATER LINE MAY BE ENCOUNTERED DURING CONSTRUCTION.
7. EXISTING OVERHEAD CABLE TV, PHONE, AND ELECTRICAL SERVICE DISCONNECTED AND ABANDONED BY SEPARATE CONTRACT. EXISTING UTILITY LINES MAY BE ENCOUNTERED DURING CONSTRUCTION.
8. EXISTING SANITARY LATERAL DISCONNECTED AND CAPPED BY SEPARATE CONTRACT. EXISTING SANITARY LATERAL MAY BE ENCOUNTERED DURING CONSTRUCTION.
9. EXISTING STORM LATERAL DISCONNECTED AND CAPPED BY SEPARATE CONTRACT. EXISTING STORM LATERAL MAY BE ENCOUNTERED DURING CONSTRUCTION.
10. DISCONNECT AND CAP EXISTING GAS LINE DISCONNECTED AND CAPPED BY SEPARATE CONTRACT. EXISTING GAS LINE MAY BE ENCOUNTERED DURING CONSTRUCTION.
11. REMOVE EXISTING CURB IN ITS ENTIRETY. DISPOSE OF OFF-SITE.
12. EXISTING CURB TO REMAIN, PROTECT.
13. STRIP EXISTING VEGETATION & TOPSOIL. STOCKPILE FOR REUSE. ENCLOSE STOCKPILE WITH SILT FENCE PER DETAIL 1/L5.0.
14. REMOVE EXISTING ASPHALT PAVEMENT. DISPOSE OF OFF-SITE.
15. REMOVE EXISTING STAIRS, RAILING AND FOOTINGS IN ENTIRETY. DISPOSE OF OFF-SITE. REFER TO ARCHITECTURAL DRAWINGS FOR REMOVAL.
16. REMOVE EXISTING RETAINING WALL PLANTER IN ITS ENTIRETY INCLUDING FOOTINGS AND DISPOSE OF OFF-SITE.
17. REMOVE EXISTING GUIDE RAIL AND FOOTINGS IN ITS ENTIRETY. DISPOSE OF OFF-SITE.
18. REMOVE EXISTING SIGN AND DISPOSE OF OFF-SITE.
19. REMOVE EXISTING LIGHT FIXTURE, POLE, BASE AND FOOTING IN ITS ENTIRETY AND DISPOSE OFF SITE.
20. REMOVE EXISTING BOLLARD AND FOOTING IN ITS ENTIRETY. DISPOSE OFF SITE.
21. STRIP EXISTING GRAVEL AND STOCKPILE FOR REUSE.
22. REMOVE EXITING ASPHALT PAVEMENT.
23. REMOVE EXISTING VEGETATION AND DISPOSE OF OFF SITE. STRIP EXISTING GRAVEL AND STOCKPILE FOR REUSE.
24. INSTALL GRASS SEED PER DETAIL 1/L4.0 UPON COMPLETION OF DEMOLITION WORK.
25. ROUGH GRADE EXISTING TOPSOIL TO A SMOOTH, CONSISTENT GRADE, FINE GRADE AND ESTABLISH LAWN.
26. REMOVE EXISTING STRUCTURE AND CAP OR REMOVE PIPES IF ENCOUNTERD.

LEGEND

X-BINGHAMTON HOUSING

EXISTING	PROPOSED	DESCRIPTION
100		CONTOUR
+377.7		SPOT ELEVATION
	CT/CE	CURB TAPER/END
	TC/BC	TOP/BOTTOM OF CURB
	HP/LP	HIGH / LOW POINT
	TP-2	TEST PIT
	B-1	BORING (SEE SPECIFICATIONS FOR BORING INFO)
		FENCE
W		UTILITY POLE
	WV	WATER LINE
	HYD	FIRE HYDRANT
EX ST	ST	STORM PIPE
	UD	UNDERDRAIN
EX SAN	SAN	SANITARY PIPE
E/T	OE	OVERHEAD ELECTRIC
E	UE	UNDERGROUND ELECTRIC
T	T	TELEPHONE
EX G	G	GAS
	ST MH	STORM STRUCTURE
	DW	DRYWELL
	DI	INLET
	CB / MH	CATCH BASIN/MANHOLE
	CO	CLEAN OUT
	DS	ROOF DOWNSPOUT
		SANITARY MANHOLE
		ASPHALT PAVEMENT-PARKING
		CONCRETE PAVEMENT
		MAINTENANCE STRIP
		TRAFFIC SIGN
		LIGHT POLE (SEE ELECTRICAL PLANS FOR WIRING)
		CURB
		CURB FLUSH (1" REVEAL UNLESS OTHERWISE NOTED)
SF		SILT FENCE
		TREE
		SHRUB
	QUANTITY / PLANT TYPE	PLANT KEY
		VEGETATION

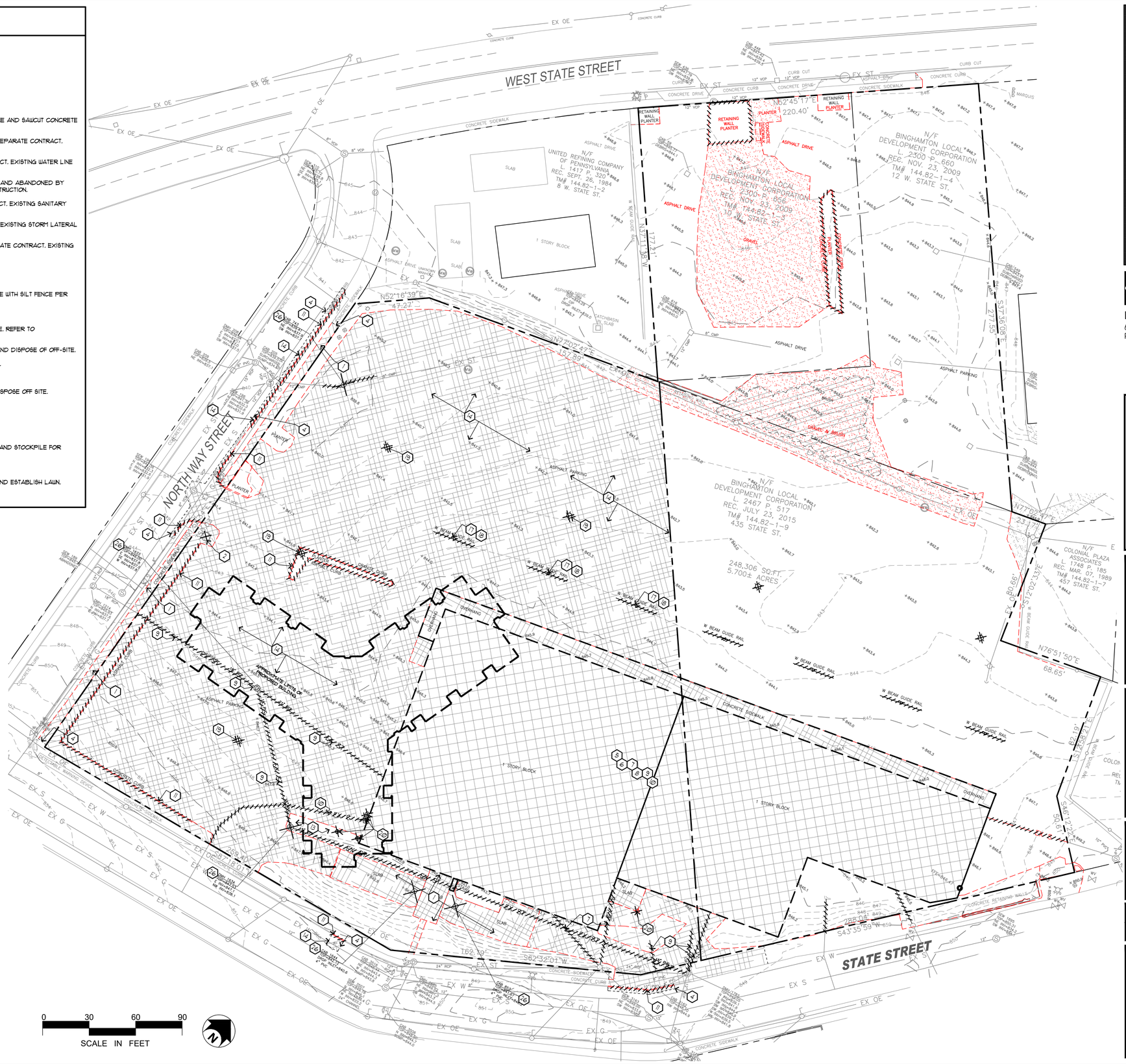

ZAUSMER·FRISCH SCRUTON & AGGARWAL
DESIGNERS / BUILDERS
219 BURNET AVENUE / SYRACUSE / NEW YORK 13203
TEL (315) 475-8404 / FAX (315) 475-8470 / EMAIL zfsa@zausmerfrisch.com

KEPLINGER FREEMAN ASSOCIATES
LANDSCAPE ARCHITECTURE & LAND PLANNING
6320 FLY ROAD, SUITE 109 EAST SYRACUSE, NEW YORK 13057
PHONE: (315) 445-7980 FAX: (315) 445-7981

PROJECT:
435 STATE STREET DEVELOPMENT
435 WEST STATE STREET
BINGHAMTON, NEW YORK

TITLE:
SITE PREPARATION PLAN

REGISTERED LANDSCAPE ARCHITECT EDMUND GILBERT KEPLINGER 001834 STATE OF NEW YORK

PROGRESS PRINT
NOT FOR CONSTRUCTION

IT IS A VIOLATION OF LAW FOR ANY PERSON, UNLESS ACTING UNDER THE DIRECTION OF A LICENSED ARCHITECT TO ALTER ANY ITEM ON THIS DOCUMENT IN ANY WAY. ANY LICENSEE WHO ALTERS THIS DOCUMENT IS REQUIRED BY LAW TO AFFIX HIS OR HER SEAL AND THE NOTATION "ALTERED BY" FOLLOWED BY HIS OR HER SIGNATURE AND A SPECIFIC DESCRIPTION OF THE ALTERATIONS.

DATE	SCALE
10-12-16	AS NOTED
PROJECT NUMBER 36087	DRAWN BY MDL

SHEET NUMBER
L1.0

REVISIONS

10/28/16	MDL	GENERAL REVISIONS
12/7/16	MDL	MISC. REVISIONS
6/5/18	MDL	BLDG. REVISIONS
7/5/18	VER	SITE REVISIONS

D:\00-projects\36087 - ZF Binghamton\CADD\L1.0 - Site Preparation Plan.dwg

GRADING, DRAINAGE & UTILITY NOTES

1. MEET EXISTING LINE AND GRADE OF ADJOINING SURFACE.
2. CONNECT NEW WATER SERVICE TO BUILDING FROM CURB BOX. CURB BOX AND ASSOCIATED WATER MAIN CONNECTION TO THE MAIN LOCATED IN WEST STATE STREET TO BE PERFORMED BY CITY OF BINGHAMTON WATER DEPARTMENT.
3. CONNECT NEW FIRE PROTECTION WATER SERVICE TO BUILDING FROM EXISTING WATER MAIN IN WEST STATE STREET. VALVE TAP AND SLEEVE TO BE PROVIDED AND INSTALLED BY THE CITY OF BINGHAMTON WATER DEPARTMENT. CONTRACTOR SHALL INSTALL LATERAL FROM THE MAIN TO THE BUILDING. COORDINATE WITH CITY OF BINGHAMTON WATER DEPARTMENT
4. PROPOSED CURB SHALL MATCH TOP AND FACE OF EXISTING CURB.
5. ALL LATERAL SEWER CONNECTIONS SHALL BE PERFORMED BY A LICENSED PLUMBER. OBTAIN STREET CUT PERMIT. CONTACT CITY OF BINGHAMTON ENGINEERING PRIOR TO COMMENCEMENT OF WORK. CONTRACTOR SHALL PROVIDE EXTERIOR DROP CONNECTION AT EXISTING SANITARY MANHOLE IN NORTH WAY STREET. REFER TO EXTERIOR DROP MANHOLE CONNECTION DETAIL 6/L6.1.
6. UNDERGROUND ELECTRIC SERVICE - REFER TO ELECTRICAL DRAWINGS.
7. REFER TO PLUMBING DRAWINGS FOR CONTINUATION INSIDE BUILDING.
8. GAS SERVICE - REFER TO PLUMBING DRAWINGS.
9. INSTALL COMMERCIAL SERVICE TRAP & VENT PER DETAIL 7/L6.1.
10. INSTALL WATER GATE VALVE PER DETAIL 2/L6.1.
11. INSTALL THRUST BLOCK PER DETAIL 1/L6.1.
12. INSTALL 8" ROOF DRAIN LATERAL @ APPROXIMATLY 844.50. REFER TO PLUMBING DRAWINGS.

GRADING and UTILITY GENERAL NOTES

REFER TO DRAWINGS L2.0

1. ANY/ALL FILL REQUIRED BELOW PAVING SUBGRADE SHALL ONLY BE COARSE AGGREGATE FILL OR SUBBASE COURSE MATERIALS.
2. WHEREVER EXISTING STORM STRUCTURES ARE TO BE ABANDONED AND REMOVED, CUT AND PLUG CONNECTING PIPES AND/OR REMOVE PORTIONS OF PIPES WHICH MAY INTERFERE WITH OTHER WORK.
3. ALL CONCRETE PAVING AT ALL DOORS SHALL BE FLUSH WITH BUILDING FLOOR ELEVATION. CONCRETE PAVEMENT SHALL BE DOWELED TO FOUNDATION WALL PER DETAILS.
4. ALL GRAVITY SANITARY SEWER LINES SHALL BE SDR-35 PVC WITH 48" MIN. COVER.
5. CONTRACTOR SHALL COORDINATE ANY DISRUPTIONS TO EXISTING UTILITY SERVICES WITH ADJACENT PROPERTY OWNERS.
6. ALL ELECTRIC AND TELEPHONE EXTENSIONS INCLUDING SERVICE LINES SHALL BE CONSTRUCTED TO THE APPROPRIATE UTILITY COMPANY SPECIFICATIONS. ALL UTILITY DISCONNECTIONS SHALL BE COORDINATED WITH THE DESIGNATED UTILITY COMPANIES.
7. CONSTRUCTION SHALL NOT START ON ANY PUBLIC UTILITY SYSTEM UNTIL WRITTEN APPROVAL HAS BEEN RECEIVED BY THE ENGINEER FROM THE APPROPRIATE GOVERNING AUTHORITY AND THE CONTRACTOR HAS BEEN NOTIFIED BY THE ENGINEER.
8. PRIOR TO THE CONSTRUCTION OF OR CONNECTION TO ANY STORM DRAIN, SANITARY SEWER, WATER MAIN OR ANY OF THE DRY UTILITIES, THE CONTRACTOR SHALL EXCAVATE, VERIFY AND CALCULATE ALL POINTS OF CONNECTION AND ALL UTILITY CROSSINGS AND INFORM KEPLINGER FREEMAN ASSOCIATES (KFA)/RZ ENGINEERING AND THE OWNER/DEVELOPER OF ANY CONFLICT OR REQUIRED DEVIATIONS FROM THE PLAN. NOTIFICATION SHALL BE MADE A MINIMUM OF 48 HOURS PRIOR TO CONSTRUCTION. KFA AND ITS CLIENTS SHALL BE HELD HARMLESS IN THE EVENT THAT THE CONTRACTOR FAILS TO MAKE SUCH NOTIFICATION.

IMPERVIOUS TABLE

REDEVELOPED PARCEL SIZE	119,609 SF		
IMPERVIOUS TYPOLOGY	EXISTING	PROPOSED	REDUCTION
BUILDING	29,835 SF	18,400 SF	-38 %
ASPHALT	83,514 SF	45,050 SF	-46 %
CONCRETE	2,581 SF	6,580 SF	+254 %
IMPERVIOUS TOTAL	115,930 SF	70,030 SF	-40 %

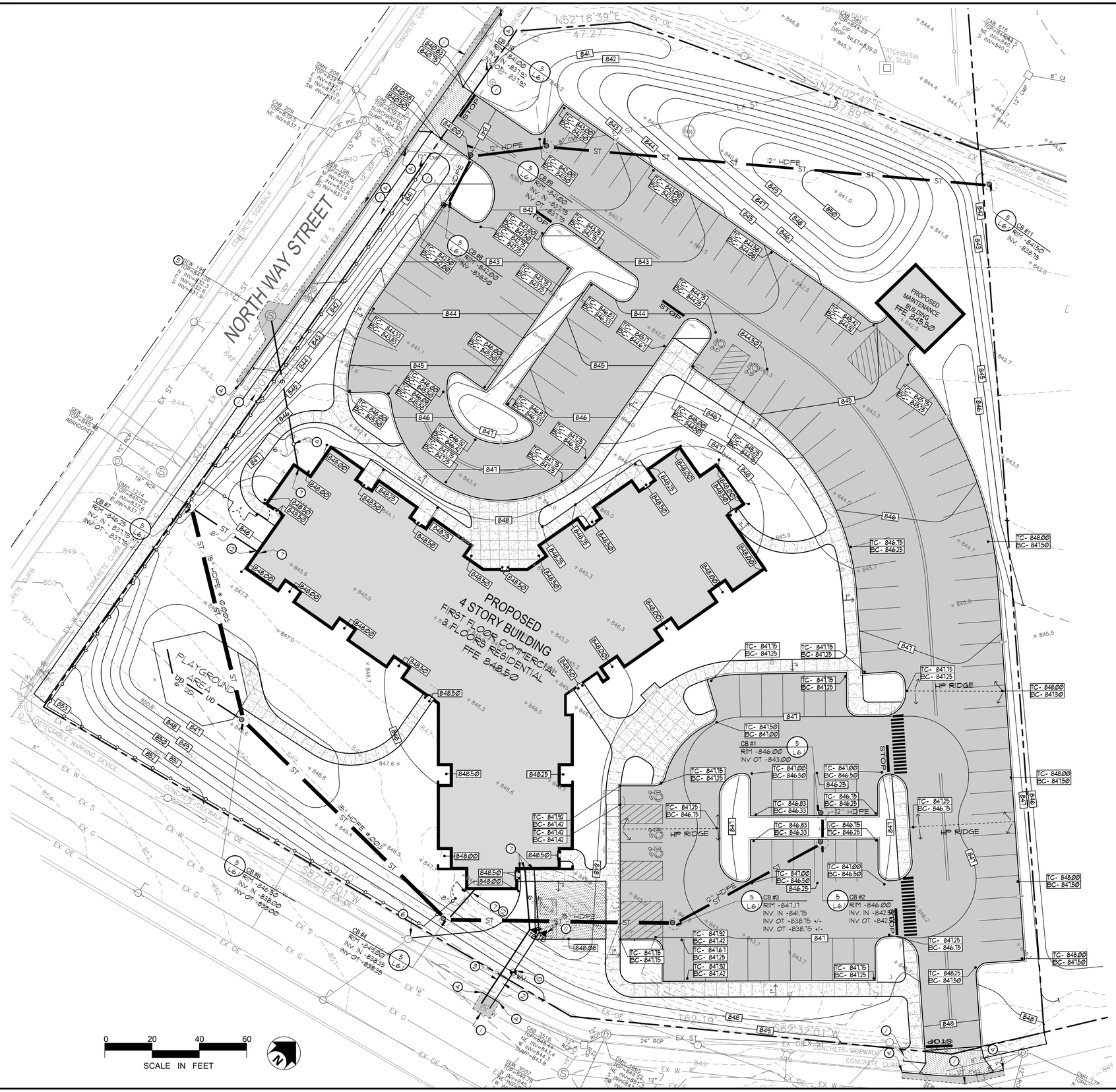

ZAUSMER·FRISCH SCRUTON & AGGARWAL
DESIGNERS / BUILDERS
219 BURNET AVENUE / SYRACUSE / NEW YORK 13203
TEL (315) 475-8404 / FAX (315) 475-8470 / E-MAIL zfsa@zausmerfrisch.com

KEPLINGER FREEMAN ASSOCIATES
LANDSCAPE ARCHITECTURE & LAND PLANNING
6320 FLY ROAD, SUITE 109 EAST SYRACUSE, NEW YORK 13057
PHONE: (315) 445-7980 FAX: (315) 445-7981

PROJECT:
435 STATE STREET DEVELOPMENT
435 WEST STATE STREET
BINGHAMTON, NEW YORK

TITLE:
SITE GRADING, DRAINAGE & UTILITY PLAN

REGISTERED LANDSCAPE ARCHITECT
EDWARD GILBERT KEPLINGER
001835
STATE OF NEW YORK

PROGRESS PRINT
NOT FOR CONSTRUCTION

IT IS A VIOLATION OF LAW FOR ANY PERSON, UNLESS ACTING UNDER THE DIRECTION OF A LICENSED ARCHITECT TO ALTER ANY ITEM ON THIS DOCUMENT IN ANY WAY. ANY LICENSEE WHO ALTERS THIS DOCUMENT IS REQUIRED BY LAW TO AFFIX HIS OR HER SEAL AND THE NOTATION "ALTERED BY" FOLLOWED BY HIS OR HER SIGNATURE AND A SPECIFIC DESCRIPTION OF THE ALTERATIONS.

DATE	SCALE
10-12-16	AS NOTED
PROJECT NUMBER	DRAWN BY
36087	MDL

SHEET NUMBER
L2.0

REVISIONS

10/28/16	MDL	
GENERAL REVISIONS		
12/7/16	MDL	
MISC. REVISIONS		
6/5/18	MDL	
BLDG. REVISIONS		
7/5/18	VER	
SITE REVISIONS		

D:\DOcprojects\36087 - ZF Binghamton\CAD\L2.0 - Grading, Drainage & Utility

GENERAL NOTES

X-BINGHAMTON-GEN NOTES

1. TOPOGRAPHIC AND BOUNDARY SURVEY PREPARED BY KEYSTONE ASSOCIATES SURVEYORS, L.L.C. BINGHAMTON, NY, DATED SEPTEMBER 15, 2016.

OWNER AND ARCHITECT DO NOT CONFIRM THE COMPLETENESS OR ACCURACY OF SUCH INFORMATION. CONTRACTOR IS RESPONSIBLE FOR THOROUGH EXAMINATION AND VERIFICATION OF ALL EXISTING SURFACE AND SUBSURFACE CONDITIONS AFFECTING THE NATURE, SCOPE, COMPLEXITY AND COST OF THE CONTRACT WORK. ADDITIONAL INFORMATION ON EXISTING CONDITIONS HAS BEEN ADDED TO THE DRAWINGS BASED ON THE LANDSCAPE ARCHITECT'S OBSERVATIONS BUT IS NOT INTENDED TO AND DOES NOT ALTER THE SURVEY INFORMATION. REFER TO SURVEY NOTES FOR ADDITIONAL INFORMATION.

2. SAW CUT FOR PAVING REMOVALS. EXTEND REMOVAL LINES TO INCLUDE ANY ADJOINING BROKEN OR DETERIORATING PAVING. CAREFULLY REMOVE, STOCKPILE AND PROTECT ANY ITEMS NOTED FOR SALVAGE. ALL DEMOLITION RUBBLE, DEBRIS AND EXCESS SOILS TO BE PROMPTLY REMOVED FROM SITE. STRIP AND STOCKPILE SUFFICIENT EXISTING ORGANIC TOPSOILS FOR RESPREADING AS REQUIRED ON DISTURBED AND REGRADED AREAS TO BE ESTABLISHED AS LAWN AND FOR REPAIR OF DISTURBED EXISTING LAWNS TO REMAIN. STOCKPILE ALL MATERIALS IN APPROVED LOCATIONS WITHOUT INTERFERING WITH OTHER CONTRACTOR WORK, SCHOOL TRAFFIC OR DRAINAGE.

3. ALL FILL/BACKFILL OF EXCAVATIONS AND VOIDS RESULTING FROM REMOVALS AND RELATED WORK UNDER PROPOSED OR REPLACEMENT PAVING AREAS SHALL ONLY BE COARSE AGGREGATE FILL OR SUBBASE COURSE MATERIAL THOROUGHLY COMPACTED.

4. PROTECT ALL FACILITIES AND IMPROVEMENTS ON AND ADJOINING THE PROPERTY WHICH ARE NOT SPECIFICALLY IDENTIFIED FOR REMOVAL. VERIFY LOCATIONS AND DEPTHS OF ALL SUBSURFACE UTILITIES TO REMAIN PRIOR TO ANY ADJACENT REMOVAL AND EXCAVATION WORK.

5. ALL EXISTING FEATURES SHALL REMAIN UNLESS OTHERWISE NOTED. IF THE CONTRACTOR DAMAGES ANY OF THE EXISTING ON-SITE FACILITIES TO REMAIN (TREES, PAVEMENTS, UNDERGROUND UTILITIES, STRUCTURES, ETC.,) WHETHER SHOWN ON THE PLANS OR NOT, THE CONTRACTOR SHALL REPAIR AND/OR REPLACE SUCH ITEMS AT HIS OWN EXPENSE AND ASSUME ALL RESPONSIBILITY FOR SUCH DAMAGE WITHOUT ANY ADDITIONAL COST TO THE OWNER. REPLACEMENT MATERIAL SHALL BE SAME QUALITY AND QUANTITY AS ORIGINAL.

6. THE CONTRACTOR SHALL CONFIRM EXISTING GRADES AND LOCATIONS OF ALL EXISTING FEATURES WITHIN THE CONTRACT LIMIT LINE. THE CONTRACTOR SHALL CONTACT THE LANDSCAPE ARCHITECT IMMEDIATELY SHOULD ANY DISCREPANCIES BE FOUND AT (315) 445-7980.

7. ADJUST RIMS OF UTILITY STRUCTURES TO REMAIN WITHIN AREAS OF GRADE CHANGES TO MEET PROPOSED LINES AND GRADES.

8. ALL NON-PAVED AREAS ARE TO BE LAWN UNLESS OTHERWISE NOTED.

9. CONTRACTOR SHALL BLEND NEW WORK SMOOTHLY AND EVENLY WITH EXISTING LINES AND GRADES.

10. CONTRACTOR SHALL BE RESPONSIBLE FOR LAWN MAINTENANCE WITHIN THE CONTRACT LIMIT LINE. EXISTING LAWNS SHALL BE MOWED AS MUCH AS PRACTICAL TO KEEP AREA FROM LOOKING UNSIGHTLY. ALL TRASH AND DEBRIS SHALL BE PICKED UP AND DISPOSED OF PROPERLY.

ZONING CHART

ZONING: C-1 (SERVICE COMMERCIAL DISTRICT)	REQUIRED	EXISTING	PROPOSED
MINIMUM LOT AREA:	6,000 SF	248,306SF	119,609 SF
MINIMUM LOT WIDTH:	50 FT	50 FT	200 FT
MINIMUM FRONTYARD SETBACK:	15 FT	1'-6"	22'-0
MINIMUM SIDEYARD SETBACK:	10 FT	29 FT	103-6"
MINIMUM REARYARD SETBACK:	20 FT	73 FT	162 FT
MAXIMUM LOT COVERAGE: (BUILDING SF/ LOT SIZE)	70%	19% (47,250/248,306)	14% (17,650/119,609)
MAXIMUM BUILDING HEIGHT, PRINCIPAL: (4 FLOORS X 14 FT HGT)	65 FT	21 FT	56 FT
MAXIMUM BUILDING HEIGHT, ACCESSORY:	24 FT	NA	NA

PARKING REQUIREMENTS:

STALL SIZE:
- FULL SIZE 18'-0" X 9'-0"
- COMPACT 17-0" X 8'-0"
- DRIVE AISLE 24' MIN WIDTH

* 5% OF TOTAL PARKING CAN BE COMPACT PARKING SIZE PER CODE

EXISTING PARKING CALCULATIONS:
- PARKING SPACES 261
- PARKING AREA 157,000 SF

PARKING REQUIREMENT CALCULATIONS:	AREA SQ. FT. /UNITS	ZONING REG'S
RETAIL, GENERAL (1 SPACE/250 SQ. FT)	17,650 SF.	71
OFFICE, GENERAL (1 SPACE/250 SQ. FT)		
RESIDENTIAL, MULTI UNIT (1.5 SPACES/UNITS)	36 UNITS	54
RESIDENTIAL	2 EMPLOYEES	2
REQUIRED TOTAL		127

BICYCLE PARKING REQUIREMENT CALCULATIONS:
(1 BIKE/20 PARKING SPACE)

REQUIRED TOTAL 6 BIKE SPACES

PROPOSED PARKING COUNT:
- PARKING AREA 45,050 SF
- FULL SIZE SPACES 117
- COMPACT SPACES -
- HANDICAP SPACES 5
- PROPOSED TOTAL 119
- PARKING DEFICIENCY 10

NOTE: THE DEVELOPER INTENDS TO REQUEST A 20% REDUCTION IN PARKING. 102 PARKING SPACES WOULD BE REQUIRED WITH THIS REDUCTION.

LAYOUT CONSTRUCTION NOTES

X-BINGHAMTON HOUSING- LAYOUT

1. 4" WIDE PAINTED LINES, (TYP.).
2. PAINT 4" WIDE LINES AT 45° @ 2' O.C. (TYP)
3. BUILDING LAYOUT BASELINE
4. INSTALL ASPHALT PAVEMENT PER DETAIL 1/L6.0.
5. INSTALL DOWELING AT DOORWAY PER DETAIL 10/L6.0.
6. INSTALL WASTE RECEPTACLE PER DETAIL 16/L6.0.
7. INSTALL CONCRETE PAVEMENT PER DETAIL 2/L6.0.
8. INSTALL RESERVED PARKING STALL PER DETAIL 9/L6.0.
9. INSTALL CONCRETE CURB PER DETAIL 5/L6.0.
10. INSTALL PROPOSED PORCH PER ARCHITECTURAL DRAWINGS.
11. INSTALL HD CONCRETE PER DETAIL 3/L6.0.
12. INSTALL PLAYGROUND PER MANUFACTURERS SPECIFICATIONS.
13. CURB END/ CURB TAPER PER DETAIL 7/L6.0.
14. PAINT 4" WIDE DOUBLE YELLOW LINE.
15. INSTALL STEPS PER DETAIL.
16. 1' WIDE PAINTED WHITE STOP BAR AND PAINTED 2' HT "STOP" TEXT.
17. SEEDED LAWN PER DETAIL 1/L4.0.
18. INSTALL PAINTED CROSSWALK PER DETAIL 14/L6.0.
19. INSTALL CONCRETE PAD PER DETAIL 11/L6.0.
20. INSTALL DOUNTOUN BIKE RACK BY DERO PER MANUFACTURES SPECIFICATION.
21. INSTALL 6' HT PVC FENCE PER DETAIL 15/L6.0.
22. LIGHTING LOCATION FOR COORDINATION ONLY. REFER TO LIGHTING PLAN AND ELECTRICAL PLANS FOR INSTALLATION.
23. INSTALL 5' WIDE 6'HT PVC SWING GATE TO MATCH PROPOSED VINYL FENCE.
24. INSTALL 8' WIDE, 6'HT DOUBLE LEAF PVC SWING GATE.
25. INSTALL BENCH PER MANUFACTURERS SPECIFICATIONS.

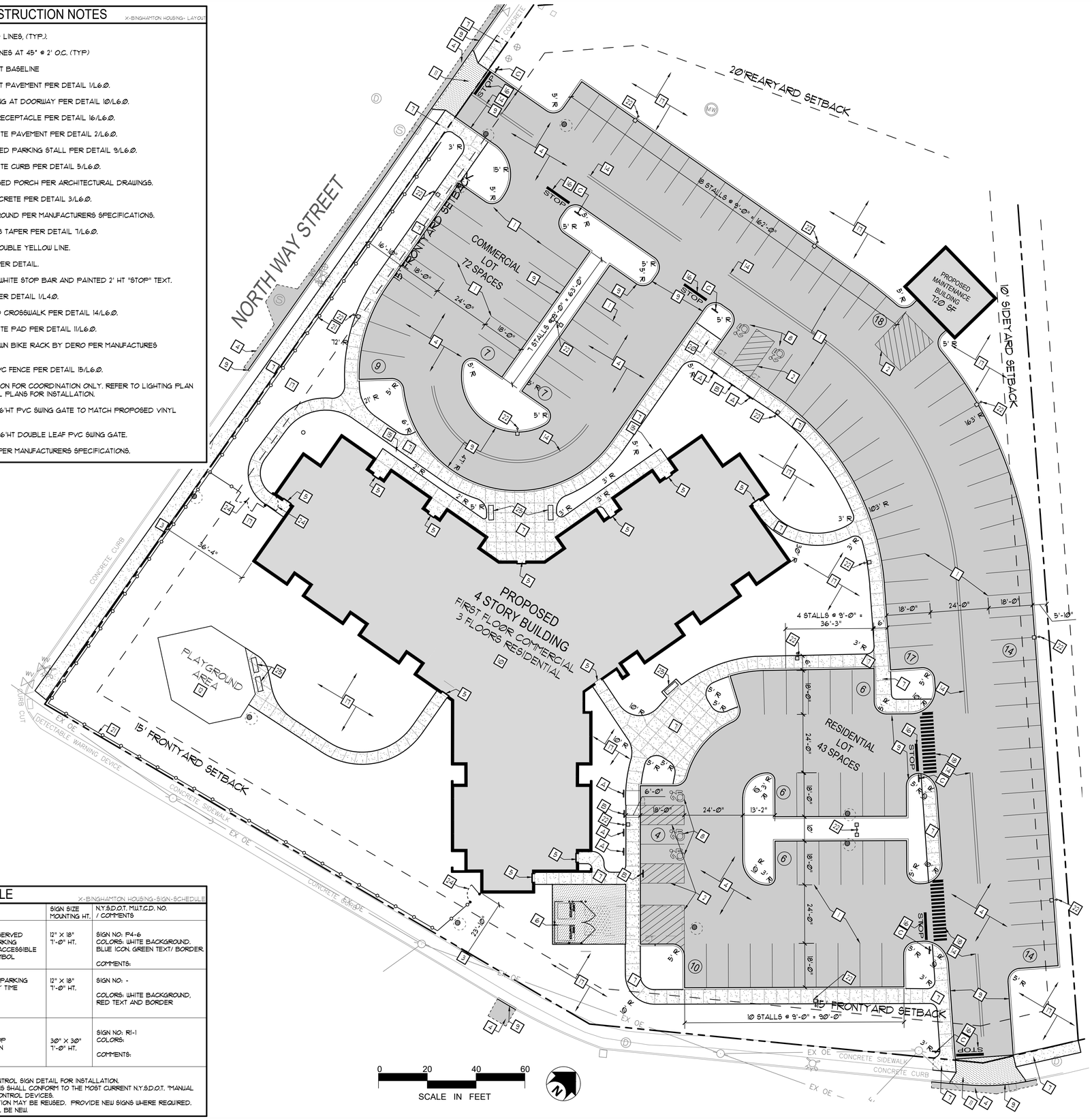

0 20 40 60
SCALE IN FEET

SIGN SCHEDULE

X-BINGHAMTON HOUSING-SIGN-SCHEDULE

KEY	SIGN PLATE		SIGN SIZE MOUNTING HT.	N.Y.S.D.O.T. MUTCD. NO. / COMMENTS
A	RESERVED PARKING	RESERVED PARKING W/ ACCESSIBLE SYMBOL	12" X 18" 7'-0" HT.	SIGN NO: R4-6 COLORS: WHITE BACKGROUND, BLUE ICON, GREEN TEXT/ BORDER. COMMENTS:
B	NO PARKING ANY TIME	NO PARKING ANY TIME	12" X 18" 7'-0" HT.	SIGN NO: - COLORS: WHITE BACKGROUND, RED TEXT AND BORDER
C	STOP	STOP SIGN	30" X 30" 7'-0" HT.	SIGN NO: R1-1 COLORS: COMMENTS:

NOTES:
1. REFER TO TRAFFIC CONTROL SIGN DETAIL FOR INSTALLATION.
2. ALL REGULATORY SIGNS SHALL CONFORM TO THE MOST CURRENT N.Y.S.D.O.T. "MANUAL OF UNIFORM TRAFFIC CONTROL DEVICES.
3. SIGNS IN GOOD CONDITION MAY BE REUSED. PROVIDE NEW SIGNS WHERE REQUIRED.
4. ALL SIGN POSTS SHALL BE NEW.

ZAUSMER·FRISCH SCRUTON & AGGARWAL
DESIGNERS / BUILDERS
219 BURNET AVENUE / SYRACUSE / NEW YORK 13203
TEL (315) 475-8404 / FAX (315) 475-8470 / EMAIL zfsa@zausmerfrisch.com

KEPLINGER FREEMAN ASSOCIATES
LANDSCAPE ARCHITECTURE & LAND PLANNING
6320 FLY ROAD, SUITE 109 EAST SYRACUSE, NEW YORK 13057
PHONE: (315) 445-7980 FAX: (315) 445-7981

PROJECT:
435 STATE STREET DEVELOPMENT
435 WEST STATE STREET
BINGHAMTON, NEW YORK

TITLE:
SITE LAYOUT PLAN

REGISTERED LANDSCAPE ARCHITECT
EDWARD GILBERT KEPLINGER
001837
STATE OF NEW YORK

PROGRESS PRINT
NOT FOR CONSTRUCTION

IT IS A VIOLATION OF LAW FOR ANY PERSON, UNLESS ACTING UNDER THE DIRECTION OF A LICENSED ARCHITECT TO ALTER ANY ITEM ON THIS DOCUMENT IN ANY WAY. ANY LICENSEE WHO ALTERS THIS DOCUMENT IS REQUIRED BY LAW TO AFFIX HIS OR HER SEAL AND THE NOTATION "ALTERED BY" FOLLOWED BY HIS OR HER SIGNATURE AND A SPECIFIC DESCRIPTION OF THE ALTERATIONS.

DATE	SCALE
10-12-16	AS NOTED
PROJECT NUMBER 36087	DRAWN BY MDL

SHEET NUMBER
L3.0

REVISIONS
- 10/28/16 MDL GENERAL REVISIONS
- 12/7/16 MDL MISC. REVISIONS
- 6/5/18 MDL BLDG. REVISIONS
- 7/5/18 VER SITE REVISIONS

D:\00-projects\36087 - ZF Binghamton\CAD\L3.0 - Layout Plan.dwg

PLANT LIST

KEY	COMMON NAME	BOTANICAL NAME	CALIPER	HEIGHT	CONDITION
TREES					
Ag	AMUR MAPLE	ACER GINNALA	2"-2.5" CAL.	-	B&B
Tc	CANADIAN HEMLOCK	TSUGA CANADENSIS	-	4'-5'	B&B
As	SERVICEBERRY CUMULUS	AMELANCHIER CUMULUS	-	6'-7'	B&B
Bn	RIVER BIRCH 'HERITAGE'	BETULA NIGRA 'HERITAGE'	-	8'-10'	B&B
Pa	NORWAY SPRUCE	PICEA ABIES	-	5'-6'	B&B
Pas	COLUMNAR NORWAY SPRUCE	PICEA ABIES FASIGIATA	-	6'-7'	B&B
Ps	EASTERN WHITE PINE	PINUS STROBUS	-	5'-6'	B&B
Ar	ARMSTRONGRED MAPLE	ACER RUBRUM 'ARMSTRONG'	2"-2.5" CAL.	-	B&B
SHRUBS					
Ca	RED TWIG DOGWOOD	CORNUS SERICEA 'FARROW' ARTIC FIRE	--	-	#5
Ra	GRO-LOW SUMAC	RHUS AROMATICA 'GRO-LOW'	--	-	#2
Sm	DWARF KOREAN LILAC	SYRINGA MEYERI	--	-	3 GAL.
PERENNIALS and GRASSES					
G-F	FOUNTAIN GRASS	PENNISETUM SATEGEUM	--	-	1 GAL

PLANT NOTES

1. 3" DEPTH SHREDDED BARK MULCH WITH 18" OF SCREENED TOPSOIL.
2. PROVIDE SPADE CUT EDGE PER PLANS.

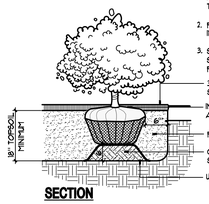

SECTION

4 / L4.0 **SHRUB PLANTING**
NOT TO SCALE — 32-9300-02

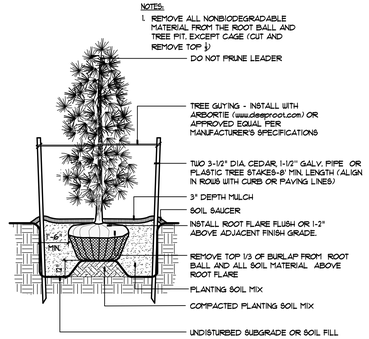

SECTION

3 / L4.0 **EVERGREEN PLANTING**
NOT TO SCALE — 32-9300-03

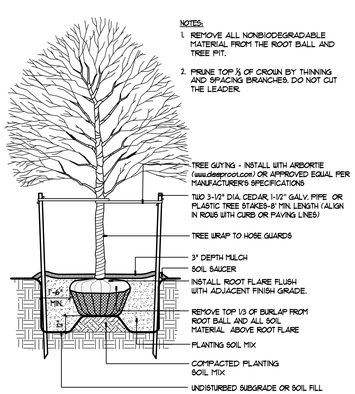

SECTION

2 / L4.0 **TREE PLANTING**
NOT TO SCALE — 32-9300-01

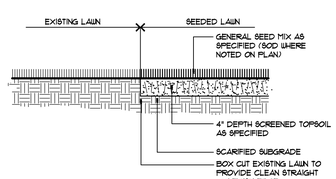

SECTION

1 / L4.0 **SEEDED LAWN**
NOT TO SCALE — 32-9200-01A

FOR SLOPES LESS THAN 1V:4H AS INDICATED ON PLANS

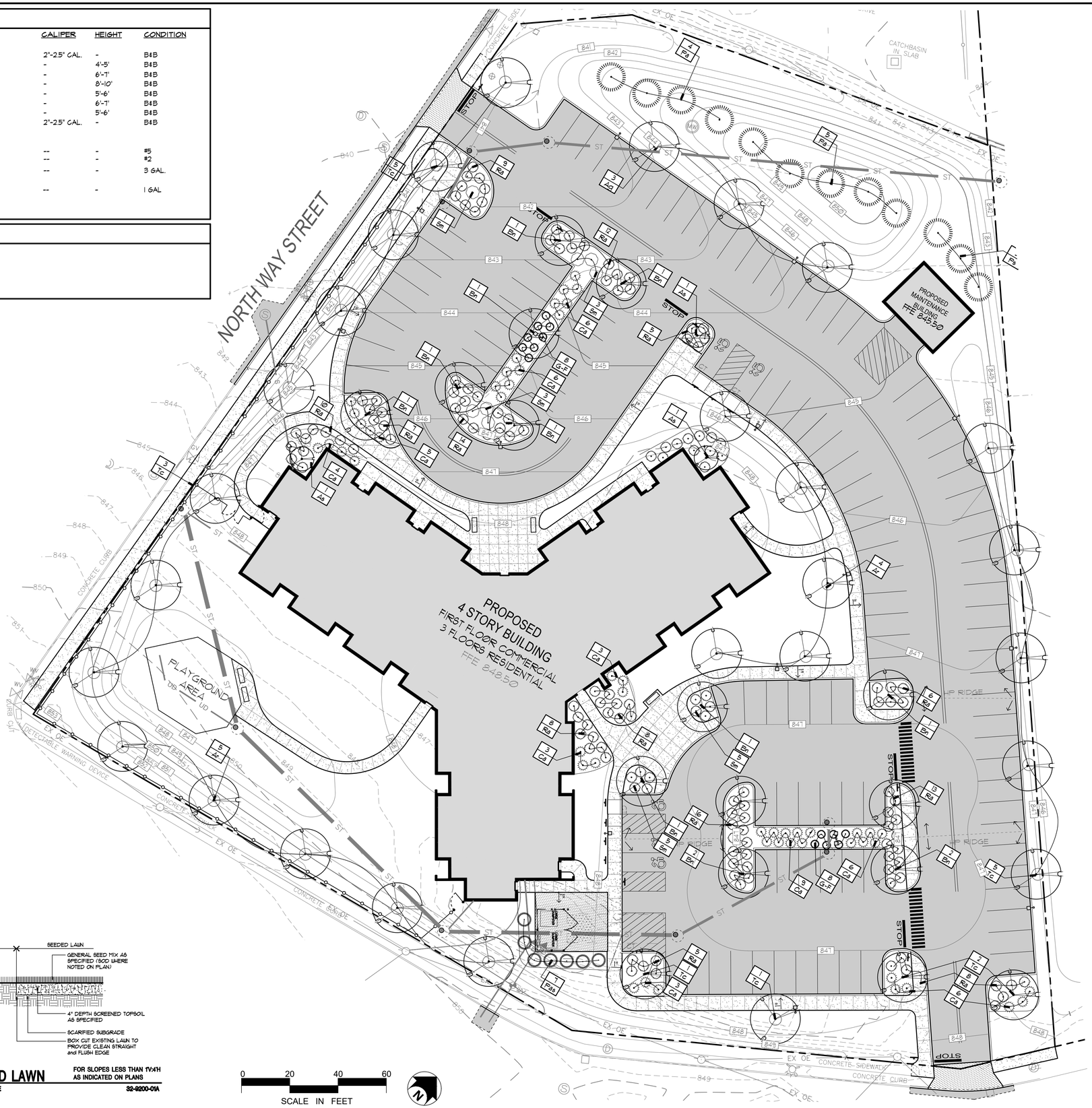

ZAUSMER·FRISCH SCRUTON & AGGARWAL
DESIGNERS / BUILDERS
219 BURNET AVENUE / SYRACUSE / NEW YORK 13203
TEL (315) 475-8404 / FAX (315) 475-8470 / E-MAIL zfsa@zausmerfrisch.com

KEPLINGER FREEMAN ASSOCIATES
LANDSCAPE ARCHITECTURE & LAND PLANNING
6320 FLY ROAD, SUITE 109 EAST SYRACUSE, NEW YORK 13057
PHONE: (315) 445-7980 FAX: (315) 445-7981

PROJECT:
435 STATE STREET DEVELOPMENT
435 WEST STATE STREET
BINGHAMTON, NEW YORK

TITLE:
SITE PLANTING PLAN

REGISTERED LANDSCAPE ARCHITECT — DONALD GILBERT KEPLINGER — 001634 — STATE OF NEW YORK

PROGRESS PRINT
NOT FOR CONSTRUCTION

IT IS A VIOLATION OF LAW FOR ANY PERSON, UNLESS ACTING UNDER THE DIRECTION OF A LICENSED ARCHITECT TO ALTER ANY ITEM ON THIS DOCUMENT IN ANY WAY. ANY LICENSEE WHO ALTERS THIS DOCUMENT IS REQUIRED BY LAW TO AFFIX HIS OR HER SEAL AND THE NOTATION "ALTERED BY" FOLLOWED BY HIS OR HER SIGNATURE AND A SPECIFIC DESCRIPTION OF THE ALTERATIONS.

DATE	SCALE
10-12-16	AS NOTED
PROJECT NUMBER	DRAWN BY
36087	MDL

SHEET NUMBER
L4.0

REVISIONS

10/28/16 MDL GENERAL REVISIONS	
12/7/16 MDL MISC. REVISIONS	
6/5/18 MDL BLDG. REVISIONS	
7/5/18 VER SITE REVISIONS	

D:\0Cprojects\36087 - ZF Binghamton\CADD\L4.0 - Planting Plan.dwg

SOIL RESTORATION NOTES

1. ACCORDING TO SECTION 5 OF THE NYS STORMWATER DESIGN MANUAL, SOIL RESTORATION PRACTICES MUST BE APPLIED ACROSS THE SITE IN AREAS OF SOIL DISTURBANCE.

2. **SOIL RESTORATION REQUIREMENTS:**

TYPE OF SOIL DISTURBANCE	SOIL RESTORATION REQUIREMENT
NO SOIL DISTURBANCE	RESTORATION NOT PERMITTED
MINIMAL SOIL DISTURBANCE	RESTORATION NOT REQUIRED
AREAS WHERE TOPSOIL IS STRIPPED ONLY - NO CHANGE IN GRADE	HSG A&B - APPLY 6 INCHES OF TOPSOIL HSG C&D AERATE* AND APPLY 6 INCHES OF TOPSOIL
AREAS OF CUT OR FILL	HSG A&B - AERATE AND APPLY 6 INCHES OF TOPSOIL HSG C&D - APPLY FULL SOIL RESTORATION**
HEAVY TRAFFIC AREAS ON SITE (ESPECIALLY IN ZONE 5-25 FEET AROUND BUILDINGS BUT NOT WITHIN A 5 FOOT PERIMETER AROUND FOUNDATION WALLS)	APPLY FULL SOIL RESTORATION (DECOMPACTION AND COMPOST ENHANCEMENT)
AREAS WHERE RUNOFF REDUCTION AND/OR INFILTRATION PRACTICES ARE APPLIED	RESTORATION NOT REQUIRED, BUT MAY BE APPLIED TO ENHANCE THE REDUCTION SPECIFIED FOR APPROPRIATE PRACTICES.
REDEVELOPMENT PROJECTS	SOIL RESTORATION IS REQUIRED ON REDEVELOPMENT PROJECTS IN AREAS WHERE EXISTING IMPERVIOUS AREA WILL BE CONVERTED TO PERVIOUS AREA.

*AERATION INCLUDES THE USE OF MACHINES SUCH AS TRACTOR-DRAWN IMPLEMENTS WITH COULTERS MAKING A NARROW SLIT IN THE SOIL, A ROLLER WITH MANY SPIKES MAKING INDENTATIONS IN THE SOIL, OR PRONGS WHICH FUNCTION LIKE A MINI-SUB-SOILER.

**PER "DEEP RIPPING AND DE-COMPACTION, DEC 2008".

3. **SOIL RESTORATION PRACTICE IMPLEMENTATION:**

DURING PERIODS OF RELATIVELY LOW TO MODERATE SUBSOIL MOISTURE, THE DISTURBED SUBSOILS ARE RETURNED TO ROUGH GRADE AND THE FOLLOWING SOIL RESTORATION STEPS APPLIED:

1. APPLY 3 INCHES OF COMPOST OVER SUBSOIL.
2. TILL COMPOST INTO SUBSOIL TO A DEPTH OF AT LEAST 12 INCHES USING A CAT-MOUNTED RIPPER, TRACTORMOUNTED DISC, OR TILLER, MIXING, AND CIRCULATING AIR AND COMPOST INTO SUBSOILS.
3. ROCK-PICK UNTIL UPLIFTED STONE/ROCK MATERIALS OF FOUR INCHES AND LARGER SIZE ARE CLEANED OFF THE SITE.
4. APPLY TOPSOIL TO A DEPTH OF 6 INCHES.
5. VEGETATE AS REQUIRED BY APPROVED PLAN.
6. COMPOST SHALL BE AGED, FROM PLANT DERIVED MATERIALS, FREE OF VIABLE WEED SEEDS, HAVE NO VISIBLE FREE WATER OR DUST PRODUCED WHEN HANDLING, PASS THROUGH A HALF INCH SCREEN AND HAVE A pH SUITABLE TO GROW DESIRED PLANTS.

FIGURES 5.16 AND 5.17 TO THE BELOW SHOW TWO ATTACHMENTS USED FOR SOIL DECOMPACTION. TILLING (STEP 2 ABOVE) SHOULD NOT BE PERFORMED WITHIN THE DRIP LINE OF ANY EXISTING TREES OR OVER UTILITY INSTALLATION THAT ARE WITHIN 24 INCHES OF THE SURFACE.

Figure 5. 16 Soil aerator implement

Figure 5. 17 Soil aerator implement

4. AT THE END OF THE PROJECT AN INSPECTOR SHOULD BE ABLE TO PUSH A 3/8" METAL BAR 12 INCHES INTO THE SOIL JUST WITH BODY WEIGHT.

5. THE CONTRACTOR MUST KEEP THE SITE FREE OF VEHICULAR AND FOOT TRAFFIC OR OTHER WEIGHT LOADS. CONSIDER PEDESTRIAN FOOTPATHS. (SOMETIMES IT MAY BE NECESSARY TO DE-THATCH THE TURF EVERY FEW YEARS)

6. ALL SOIL RESTORATION SHALL BE IN ACCORDANCE WITH NYSDEC REGULATIONS AND THE APPROVED SWPPP FOR THE PROJECT.

SWPPP LEGEND

- SF — SILT FENCE
- SEDIMENT TRAP @ CB/INLET
- CONSTRUCTION ENTRANCE
- CLL — CONTRACT LIMIT LINE

EROSION CONTROL NOTES and EROSION CONTROL SEQUENCING

EROSION AND SEDIMENT CONTROL NOTES:

1. PRIOR TO THE START OF CONSTRUCTION AND UNTIL ALL DISTURBED AREAS ARE STABILIZED, ALL EROSION AND SEDIMENT CONTROL MEASURES, AS SHOWN ON THE SITE PLAN, SHALL BE INSTALLED AND MAINTAINED BY THE CONTRACTOR, AND SHALL BE IN ACCORDANCE WITH THE LATEST EDITION OF THE NEW YORK STATE GUIDELINES FOR URBAN EROSION AND SEDIMENTATION CONTROL AND THE SWPPP PREPARED FOR THE PROJECT, PRIOR TO THE COMMENCEMENT OF CONSTRUCTION.

2. BARE SOILS SHALL BE SEEDED WITHIN 14 DAYS OF EXPOSURE, UNLESS CONSTRUCTION WILL BEGIN WITHIN 21 DAYS, AS SECTIONS ARE COMPLETED, OR IF CONSTRUCTION ON AN AREA IS SUSPENDED, THE AREA SHALL BE SEEDED IMMEDIATELY.

3. SITE PREPARATION SHALL INCLUDE:
   A. SEEDBED PREPARATION - SCARIFY IF COMPACTED, REMOVE DEBRIS AND OBSTACLES SUCH AS ROOTS OR STUMPS.
   B. SOIL AMENDMENTS
      1. LIME TO pH 6.0
      2. FERTILIZE WITH 600 LBS OF 5-10-10 OR EQUIVALENT PER ACRE (14 LBS/100 SQ FT).
   C. SEED MIXTURES
      1. TEMPORARY SEEDINGS
         a. RYEGRASS (ANNUAL OR PERENNIAL) @ 30 LBS/ACRE (0.7 LBS/1000 SQ FT).
         b. CERTIFIED "AROOSTOCK" WINTER RYE (CEREAL RYE) @ 100 LBS/ACRE (2.5 LBS/1000 SQ FT).
      2. PERMANENT SEEDINGS
         a. ROUGH OR OCCASIONALLY MOWED AREAS:

LBS/ACRE	LBS/1000 SQ FT	
EMPIRE BIRDSFOOT TREFOIL OR COMMON	8	0.20
WHITE CLOVER PLUS*	8	0.2
TALL FESCUE PLUS	20	
REDTOP	2	0.05
RYEGRASS (PERENNIAL)	5	0.10

*ADD INOCULANT IMMEDIATELY PRIOR TO SEEDING

   D. METHOD OF SEEDING:
      BROADCASTING, DRILLING WITH CULTIPACK TYPE SEEDER OR HYDROSEEDING ARE ACCEPTABLE.

4. DISTURBED AREAS SHALL BE SEEDED AS NOTED ABOVE AND MULCHED WITH CLEAN STRAW AS OUTLINED IN THE NEW YORK STATE GUIDELINES FOR URBAN EROSION AND SEDIMENTATION CONTROL.

5. THE CONTRACTOR SHALL BE RESPONSIBLE FOR KEEPING THE STREET PAVEMENT AREAS CLEAN OF DIRT AND DEBRIS.

6. ACCESS TO DISTURBED AREAS SHALL BE LIMITED TO THE AREAS SHOWN ON THE PLAN. THE CONTRACTOR SHALL INSTALL THE STABILIZED CONSTRUCTION ENTRANCE AT THE LOCATIONS SHOWN ON THE PLAN AND ANY OTHER LOCATIONS THE CONTRACTOR INTENDS TO ENTER THE SITE FROM THE ADJACENT ROADWAYS.

7. ANY EXISTING DRAINAGE FACILITIES DISRUPTED BY CONSTRUCTION OR IMPACTED BY INSTALLATION OF EROSION CONTROL MEASURES SHALL BE REPLACED TO MATCH EXISTING CONDITIONS OR BETTER.

8. SEE DRAWING L-5 FOR LEGEND.

9. TEMPORARY EROSION AND SEDIMENTATION CONTROL FACILITIES - AS SEDIMENT ACCUMULATES TO ½ THE DEPTH OF THE FOREBAY OR BASIN, SEDIMENT SHALL BE REMOVED AS OUTLINED IN THE NYS GUIDELINES FOR URBAN EROSION AND SEDIMENT CONTROL.

10. DIRECT ACCESS SHALL BE PROVIDED TO ALL BASIN AREAS FOR MAINTENANCE AND REHABILITATION.

11. ALL DESIGN AND MAINTENANCE MEASURES OUTLINED IN THE SWPPP PREPARED FOR THIS PROJECT SHALL BE IMPLEMENTED AND CARRIED OUT BY THE PARTIES DEEMED RESPONSIBLE FOR THOSE DUTIES.

12. THE PERMITEE & ITS SUBCONTRACTORS ARE RESPONSIBLE FOR MEANS & METHODS OF EROSION CONTROL FACILITIES DURING CONSTRUCTION. IT SHOULD BE NOTED THAT FACILITIES ON THIS DRAWING ARE CONSIDERED MINIMUM & ADDITIONAL EROSION CONTROL MEASURES MAY BE REQUIRED AS CONSTRUCTION PROGRESSES. THE PERMITEE & ITS SUBCONTRACTORS ARE RESPONSIBLE FOR ANY ADDITIONAL MEASURES DEEMED NECESSARY BY THE LANDSCAPE ARCHITECT, SWPPP INSPECTOR OR NYSDEC.

13. PROVIDE EROSION CONTROL MEASURES AS NOTED ON THE PLANS AND AS OTHERWISE REQUIRED TO PREVENT EROSION AND SEDIMENTATION ONTO ADJOINING PROPERTY, STREETS, WATERWAYS, AND ON SITE IMPROVEMENTS BEYOND THE LIMITS OF WORK. COMPLY WITH THE LATEST ISSUE OF "NEW YORK GUIDELINES FOR URBAN EROSION AND SEDIMENT CONTROL" AND THE NYSDEC'S "REDUCING THE IMPACTS OF STORMWATER RUNOFF FROM NEW DEVELOPMENT".

14. MAINTENANCE - THE CONTRACTOR SHALL INSPECT ALL DRAINAGE STRUCTURES AND EROSION CONTROLS ON A WEEKLY BASIS AND AFTER ALL STORMS (½" RAINFALL OR GREATER) INCLUDING BUT NOT LIMITED TO THE FOLLOWING: REPLACING DAMAGED OR SILTED IN EROSION CONTROLS, CLEANING OUT STRUCTURES, AND STABILIZING ERODED OR WASHED OUT SLOPED AREAS.

15. CONTRACTOR SHALL MAINTAIN EROSION CONTROL MEASURES UNTIL CONSTRUCTION IS COMPLETE, LAWNS HAVE BECOME ESTABLISHED AND ALL SOURCES OF EROSION HAVE BEEN PERMANENTLY STABILIZED.

16. CONTRACTOR SHALL PROVIDE DUST CONTROL IN ACCORDANCE WITH THE LATEST ISSUE OF "NEW YORK GUIDELINES FOR URBAN EROSION AND SEDIMENT CONTROL."

FINAL CLEAN UP

1. REMOVE AND/OR MAINTAIN STOCKPILE AREAS.
2. REMOVE EROSION CONTROL MEASURES FROM STABILIZED AREAS.
3. FINAL CLEAN UP - REMOVE EROSION CONTROL MEASURES AND CLEAN OUT ALL DRAINAGE STRUCTURES AND PIPES AFTER LAWN IS WELL ESTABLISHED. OWNER RESPOSIBLE FOR MAINTAINING SITE UPON PROJECT CLOSEOUT.
4. CONTRACTOR, ARCHITECT, AND OWNER TO REVIEW SITE FOR COMPLETION. CONTRACTOR TO ADDRESS FINAL COMMENTS ON PUNCH LIST FROM ARCHITECT AND SWPPP INSPECTION REPORTS.
5. SUBMIT NOTICE OF TERMINATION UPON FULL STABILIZATION OF SITE.

X-BINGHAMTON HOUSING EROSION-CONTROL-NOTES

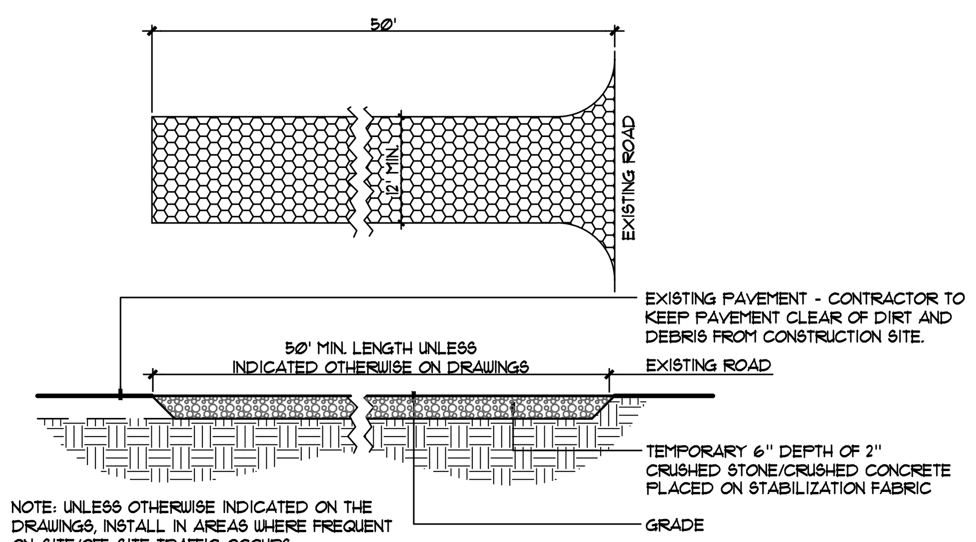

NOTE: UNLESS OTHERWISE INDICATED ON THE DRAWINGS, INSTALL IN AREAS WHERE FREQUENT ON-SITE/OFF-SITE TRAFFIC OCCURS

NOTES:
1. WIDTH-TWELVE (12) FOOT MINIMUM, BUT NOT LESS THAN THE FULL WIDTH AT POINTS WHERE INGRESS OR EGRESS OCCURS. TWENTY-FOUR (24) FOOT IF SINGLE ENTRANCE TO SITE.
2. FILTER CLOTH-WILL BE PLACED OVER THE ENTIRE AREA PRIOR TO PLACING OF STONE.
3. SURFACE WATER-ALL SURFACE WATER FLOWING OR DIVERTED TOWARD CONSTRUCTION ENTRANCES SHALL BE PIPED ACROSS THE ENTRANCE. IF PIPING IS IMPRACTICAL, A MOUNTABLE BERM WITH 5:1 SLOPES WILL BE PERMITTED.
4. MAINTENANCE-THE ENTRANCE SHALL BE MAINTAINED IN A CONDITION WHICH WILL PREVENT TRACKING OR FLOWING OF SEDIMENT ONTO PUBLIC RIGHT-OF-WAY. WHEN WASHING IS REQUIRED, IT SHALL BE DONE ON AN AREA STABILIZED WITH STONE AND WHICH DRAINS INTO AN APPROVED SEDIMENT TRAPPING DEVICE.
5. PERIODIC INSPECTION AND NEEDED MAINTENANCE SHALL BE PROVIDED AFTER EACH RAIN.
6. REFER TO SWPPP, SECTION 7 FOR NYS STANDARDS AND SPECIFICATIONS FOR STABILIZED CONSTRUCTION ENTRANCE.

SECTION

3 / L5.0 CONSTRUCTION ENTRANCE (MUDRACK)
NOT TO SCALE 31-1001-04

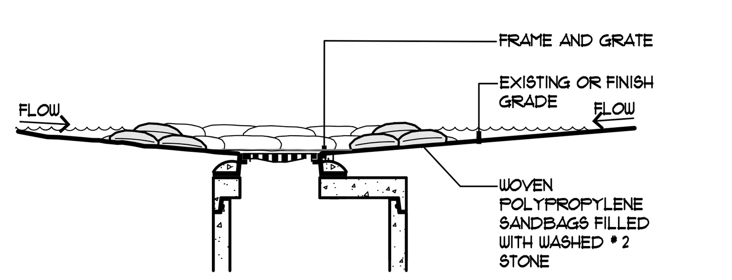

NOTES:
1. CLEAR THE AREA OF ALL DEBRIS THAT WILL HINDER SANDBAG PLACEMENT.
2. SANDBAGS TO BE PLACED ON EXISTING GRADE AND STACKED IF NECESSARY TO ELIMINATE DEBRIS FROM ENTERING STRUCTURE.
3. CONTRACTOR SHALL USE A WOVEN POLYPROPYLENE SANDBAG FILLED WITH DRAINAGE FILL (WASHED #2 STONE), OR AN APPROVED EQUAL.
4. CONTRACTOR SHALL MAINTAIN, REPAIR and REPLACE DAMAGED OR WORN SANDBAGS.

SECTION - PAVED AREAS

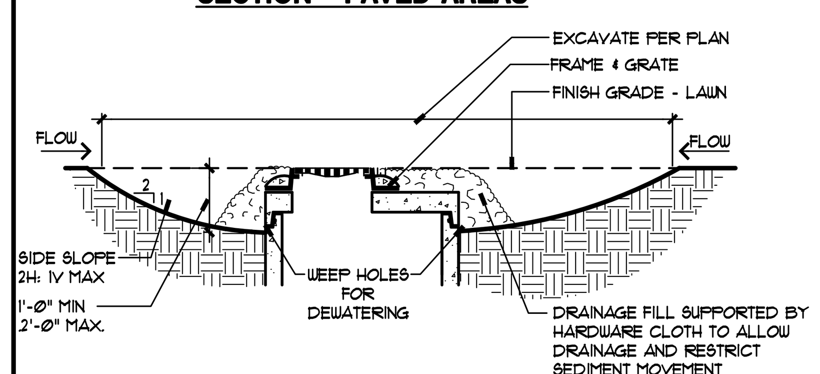

NOTES:
1. CLEAR THE AREA OF ALL DEBRIS THAT WILL HINDER EXCAVATION.
2. GRADE APPROACH TO THE INLET UNIFORMLY AROUND THE BASIN.
3. WEEP HOLES SHALL BE PROTECTED BY DRAINAGE FILL (GRAVEL).
4. UPON STABILIZATION OF CONTRIBUTING DRAINAGE AREA, SEAL WEEP HOLES, FILL BASIN WITH STABLE SOIL TO FINAL GRADE, COMPACT IT PROPERLY AND STABILIZE WITH PERMANENT SEEDING.
5. MAXIMUM DRAINAGE AREA 1 ACRE
6. CONTRACTOR MAY UTILIZE ANY APPROPRIATE STORM DRAIN INLET MEASURE WHICH COMPLIES WITH NYS STANDARDS & SPECIFICATIONS FOR EROSION & SEDIMENT CONTROL. REFER TO SWPPP, SECTION 7 FOR NYS STANDARDS & SPECIFICATIONS FOR STORM DRAIN INLET PROTECTION.
7. AFTER TOPSOIL and FINE GRADING, CONTRACTOR SHALL PLACE 10' x 10' SQUARE OF SOD AROUND STRUCTURE.

SECTION - UNPAVED AREAS

2 / L5.0 DRAINAGE STRUCTURE PROTECTION
NOT TO SCALE 31-1001-02

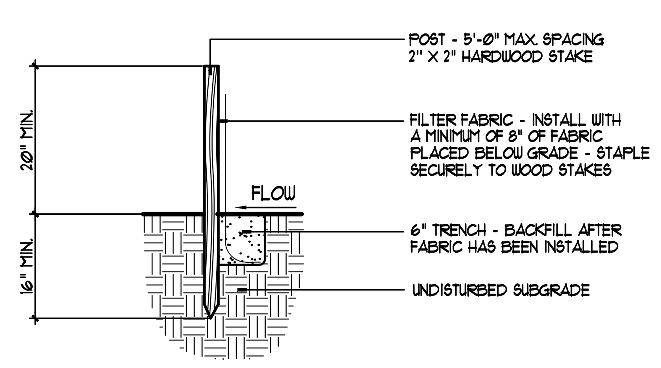

NOTES:
1. WOVEN WIRE FENCE TO BE FASTENED SECURELY TO FENCE POSTS WITH WIRE TIES OR STAPLES.
2. FILTER CLOTH TO BE FASTENED SECURELY TO WOVEN WIRE FENCE WITH TIES SPACED 24" AT TOP AND MID SECTION.
3. WHEN TWO SECTIONS OF FILTER CLOTH ADJOIN EACH OTHER THEY SHALL BE OVERLAPPED BY SIX (6) INCHES AND FOLDED.
4. MAINTENANCE SHALL BE PERFORMED AS NEEDED AND MATERIAL REMOVED WHEN "BULGES" DEVELOP IN THE SILT FENCE. FENCING SHALL BE INSPECTED MONTHLY, AND FOLLOWING MAJOR RAINFALLS.
5. THE FOLLOWING MATERIALS SHALL BE USED FOR CONSTRUCTION OF THE SILT FENCE:
   POSTS: STEEL EITHER "T" OR "U" TYPE OR 2" HARDWOOD
   FENCE: WOVEN WIRE 14-1/2 GA., 6" MAX. MESH OPENING.
   FILTER CLOTH: FILTER X, MIRAFI 100X, STABILINKA T140N OR APPROVED EQUAL.
   PREFABRICATED UNIT: GEOFAB, ENVIROFENCE, OR APPROVED EQUAL.
6. REFER TO NYS STANDARDS & SPECIFICATIONS FOR EROSION AND SEDIMENT CONTROLS FOR ADDITIONAL GUIDANCE.

SECTION

1 / L5.0 SILT FENCE (SF)
NOT TO SCALE 31-1001-01

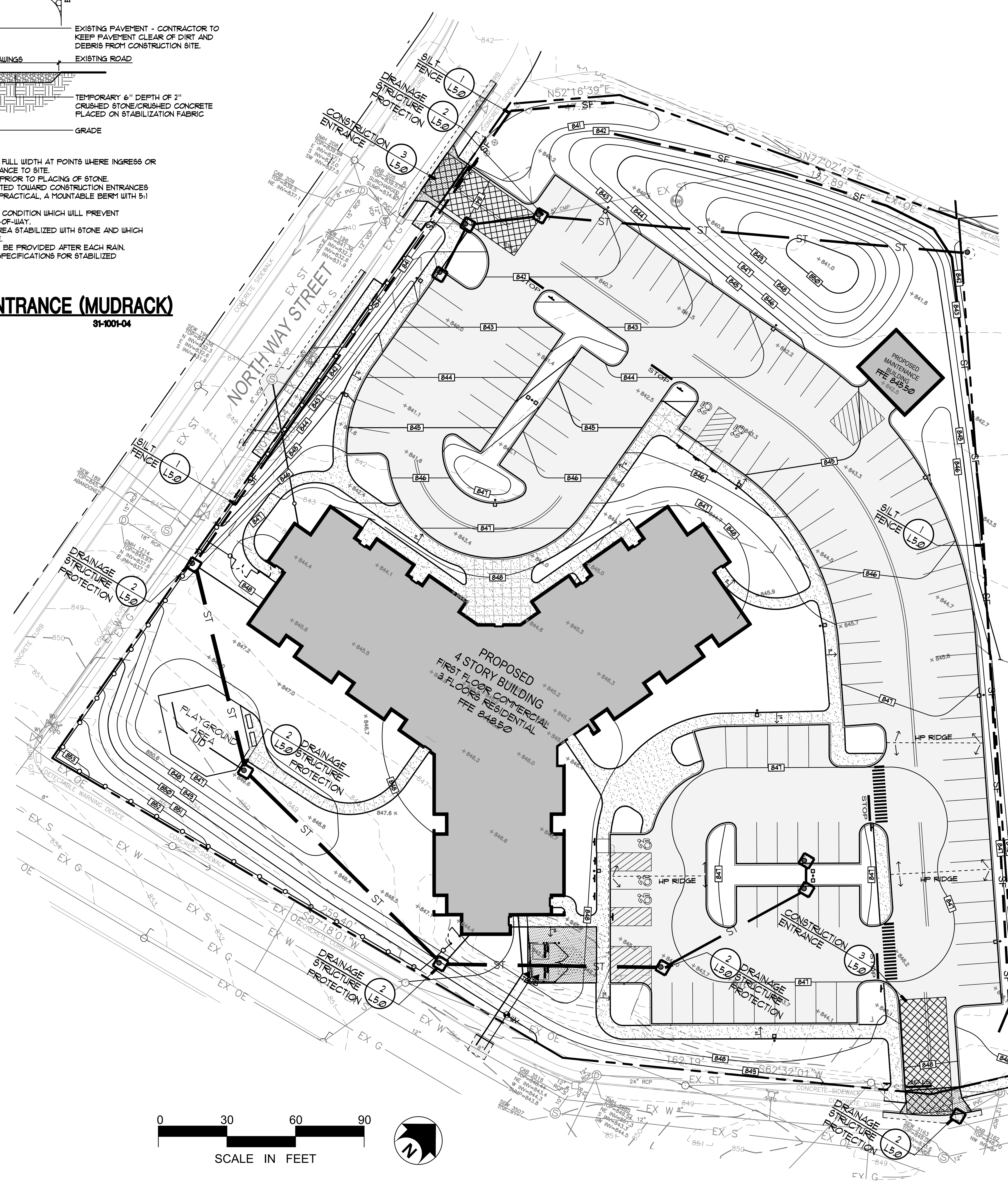

ZAUSMER · FRISCH SCRUTON & AGGARWAL
DESIGNERS / BUILDERS
219 BURNET AVENUE / SYRACUSE / NEW YORK 13203
TEL (315) 475-8404 / FAX (315) 475-8470 / E-MAIL zisa@zausmerfrisch.com

KEPLINGER FREEMAN ASSOCIATES
LANDSCAPE ARCHITECTURE & LAND PLANNING
6320 FLY ROAD, SUITE 109 EAST SYRACUSE, NEW YORK 13057
PHONE: (315) 445-7980 FAX: (315) 445-7981

PROJECT: 435 STATE STREET DEVELOPMENT
435 WEST STATE STREET
BINGHAMTON, NEW YORK

TITLE: STORMWATER POLLUTION PREVENTION PLAN

PROGRESS PRINT
NOT FOR CONSTRUCTION

IT IS A VIOLATION OF LAW FOR ANY PERSON, UNLESS ACTING UNDER THE DIRECTION OF A LICENSED ARCHITECT TO ALTER ANY ITEM ON THIS DOCUMENT IN ANY WAY. ANY LICENSEE WHO ALTERS THIS DOCUMENT IS REQUIRED BY LAW TO AFFIX HIS OR HER SEAL AND THE NOTATION "ALTERED BY" FOLLOWED BY HIS OR HER SIGNATURE AND A SPECIFIC DESCRIPTION OF THE ALTERATIONS.

DATE	SCALE
10-12-16	AS NOTED
PROJECT NUMBER 36087	DRAWN BY MDL

SHEET NUMBER **L5.0**

REVISIONS		
10/28/16 GENERAL REVISIONS	MDL	
12/7/16 MISC. REVISIONS	MDL	
6/5/18 BLDG. REVISIONS	MDL	
6/26/18 SITE REVISIONS	VER	

D:\00-projects\36087 - ZF Binghamton\CADD\L5.0 - SWPPP Plan.dwg

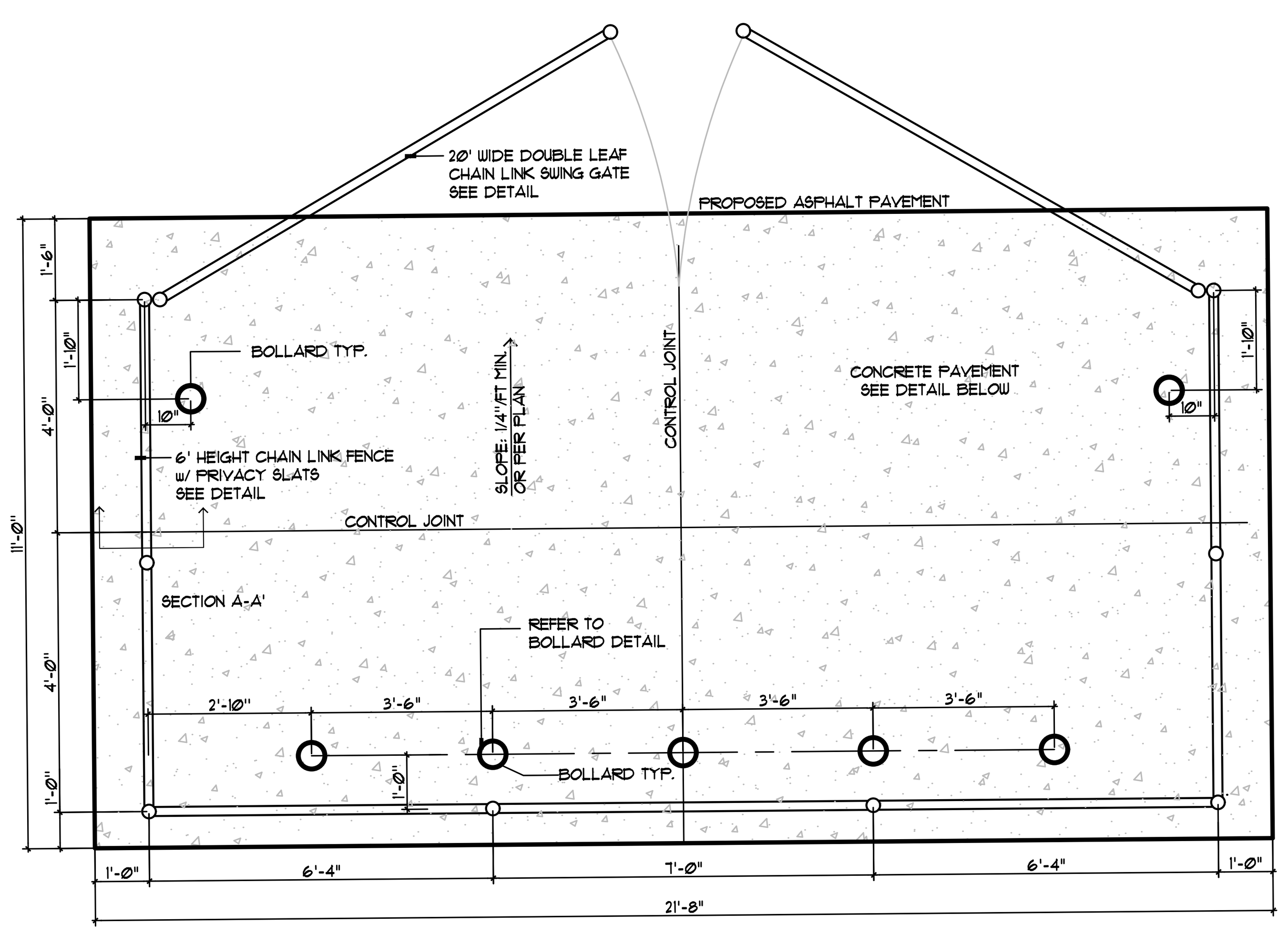

PLAN

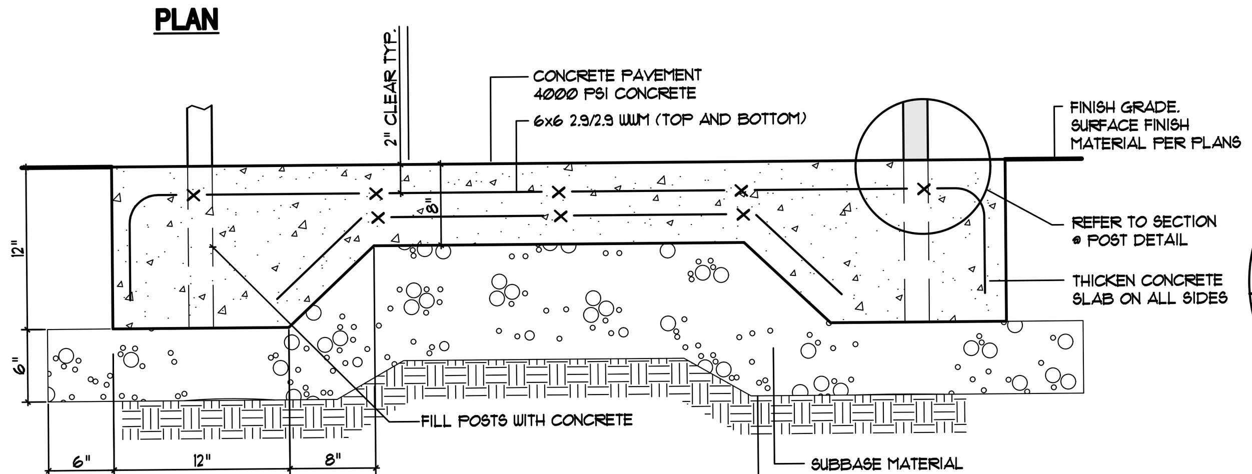

ELEVATION

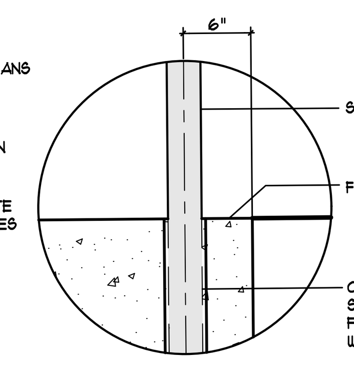

SECTION @ POST

16 / L6.0 WASTE/RECYCLING ENCLOSURE & PAD

NOT TO SCALE — 32-4001-04

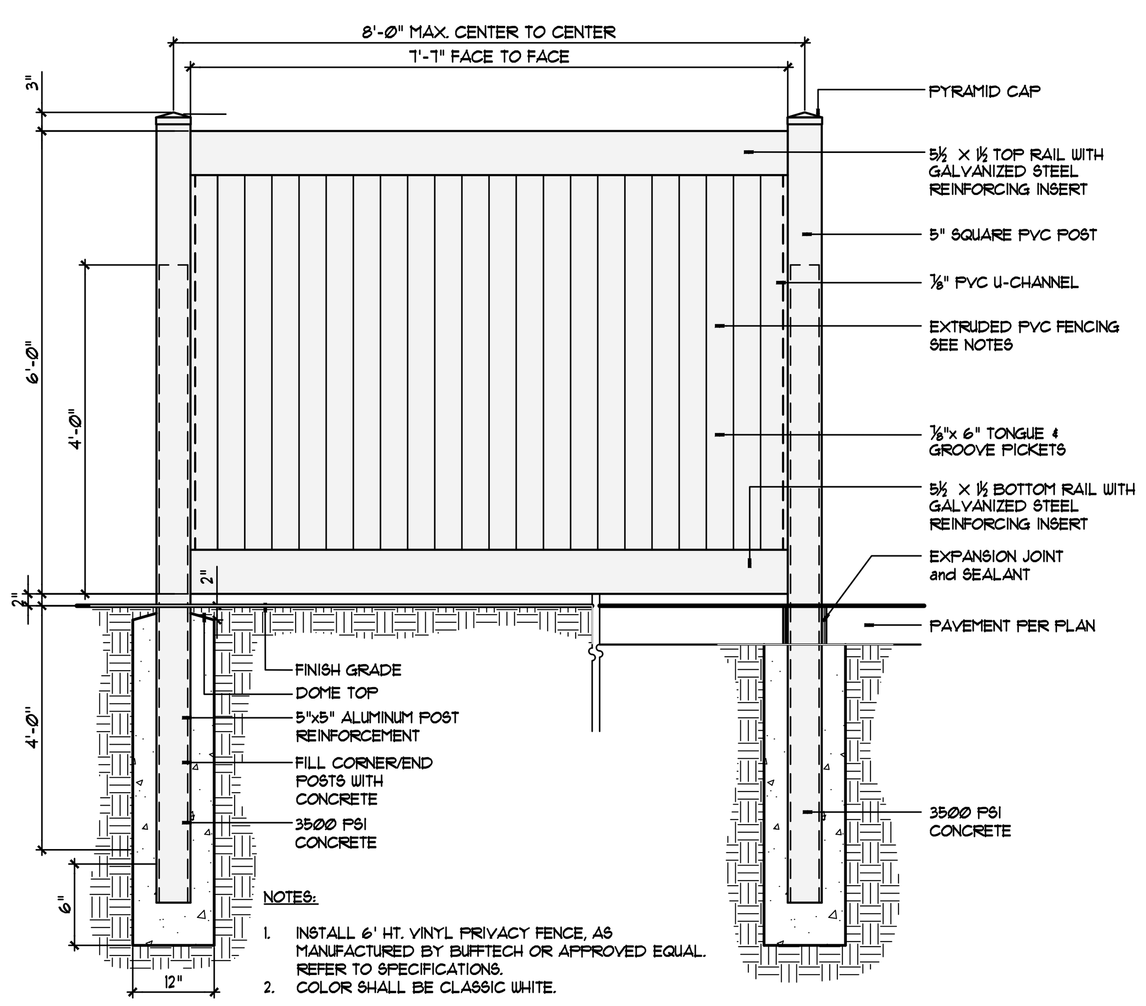

NOTES:
1. INSTALL 6' HT. VINYL PRIVACY FENCE, AS MANUFACTURED BY BUFFTECH OR APPROVED EQUAL. REFER TO SPECIFICATIONS.
2. COLOR SHALL BE CLASSIC WHITE.

ELEVATION

15 / L6.0 6' HT. PRIVACY PVC FENCE

NOT TO SCALE — 32-3123-02

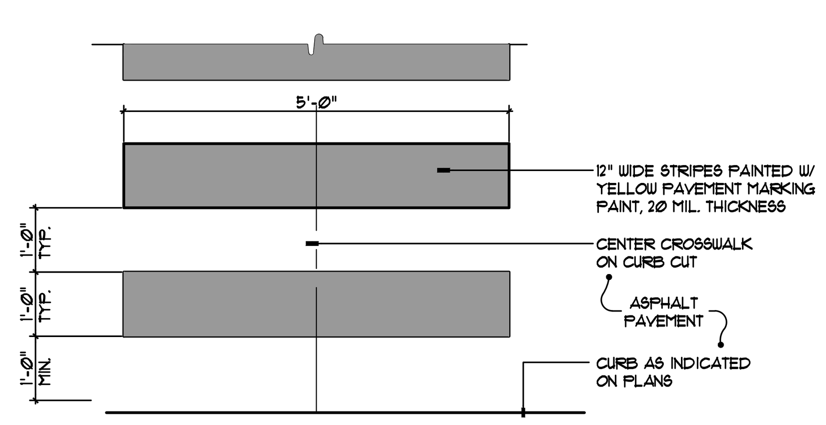

PLAN

14 / L6.0 PAINTED CROSSWALK

NOT TO SCALE — 32-1723-02

13 / L6.0 DETAIL OMITTED

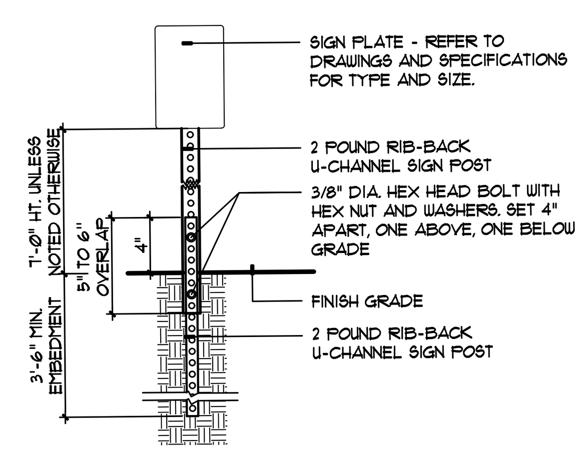

SECTION - NON-PAVED AREAS

NOTES:
1. FABRICATE SIGN PANELS OF .063 ALUMINUM.
2. ALL SIGNS SHALL BE FASTENED TO OR MOUNTED ON POST WITH GALVANIZED BOLTS, NUTS AND WASHERS.
3. FOR FURTHER INFORMATION, REFER TO THE LATEST EDITION OF THE MANUAL OF UNIFORM TRAFFIC CONTROL DEVICES FOR STREETS AND HIGHWAYS, U.S. DEPARTMENT OF TRANSPORTATION, FEDERAL HIGHWAY ADMINISTRATION.
4. COORDINATE SIGN LOCATION TO AVOID UTILITIES.

12 / L6.0 TRAFFIC CONTROL SIGN

NOT TO SCALE — 32-4000-01

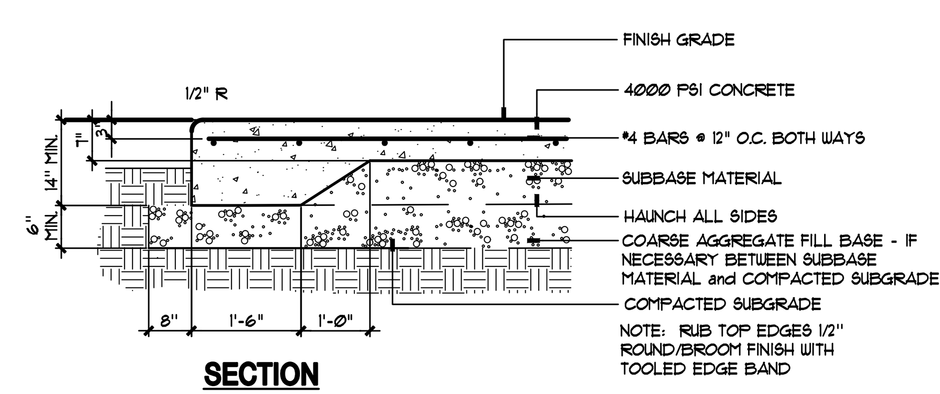

SECTION

11 / L6.0 CONCRETE UTILITY PAD

NOT TO SCALE — 32-1313-13B

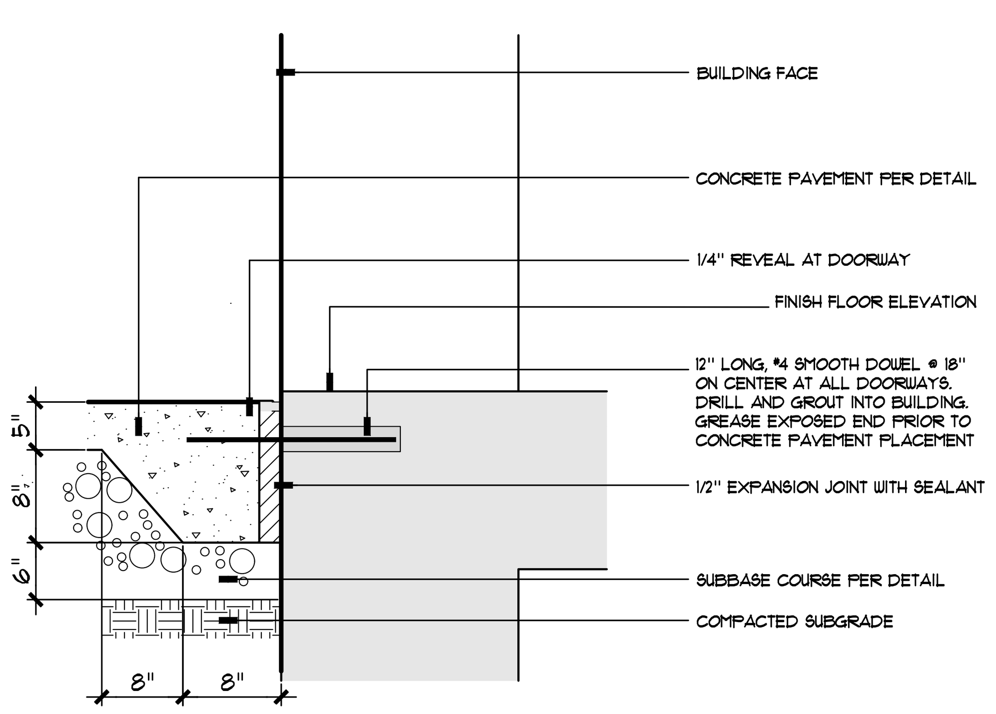

SECTION

10 / L6.0 CONCRETE PAD @ BUILDING W/ DOWELING

NOT TO SCALE — 32-1313-10A

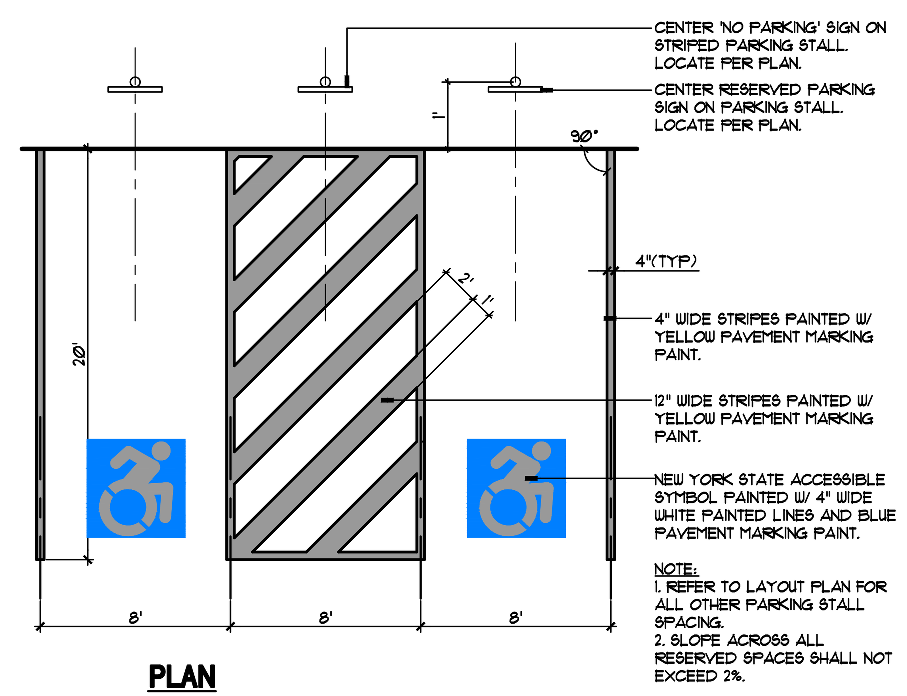

NOTE:
1. REFER TO LAYOUT PLAN FOR ALL OTHER PARKING STALL SPACING.
2. SLOPE ACROSS ALL RESERVED SPACES SHALL NOT EXCEED 2%.

PLAN

9 / L6.0 RESERVED PARKING STALL

NOT TO SCALE — 32-1723-01

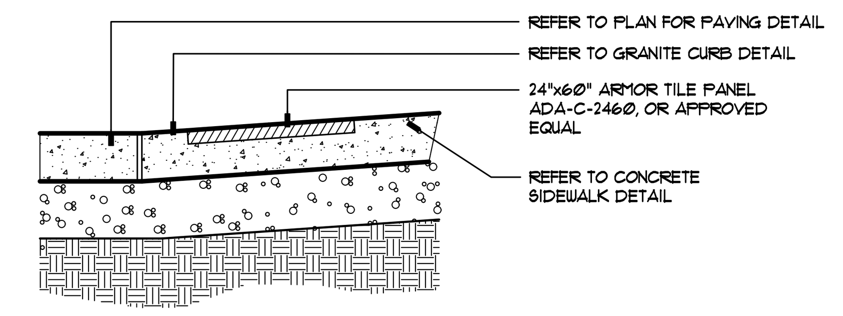

SECTION

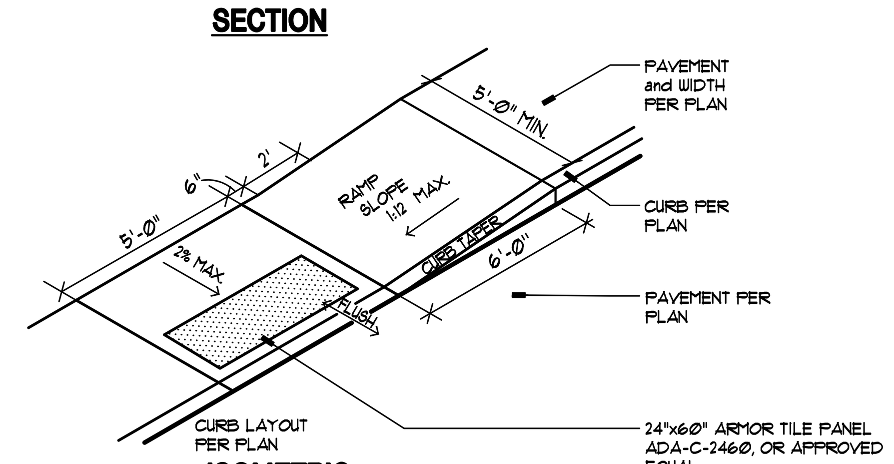

ISOMETRIC

8 / L6.0 ACCESSIBLE RAMP (TYPE 2)

NOT TO SCALE — 32-1313-09G

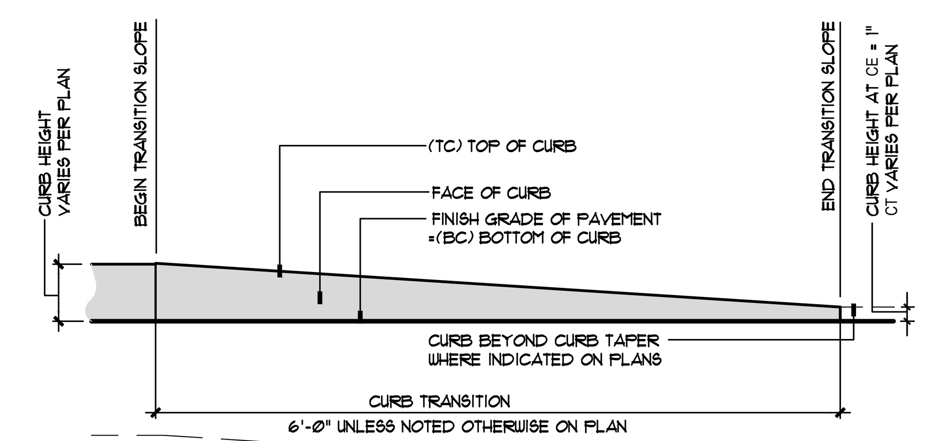

ELEVATION

7 / L6.0 CURB ENDING/TAPER (CE/CT)

NOT TO SCALE — 32-1313-07

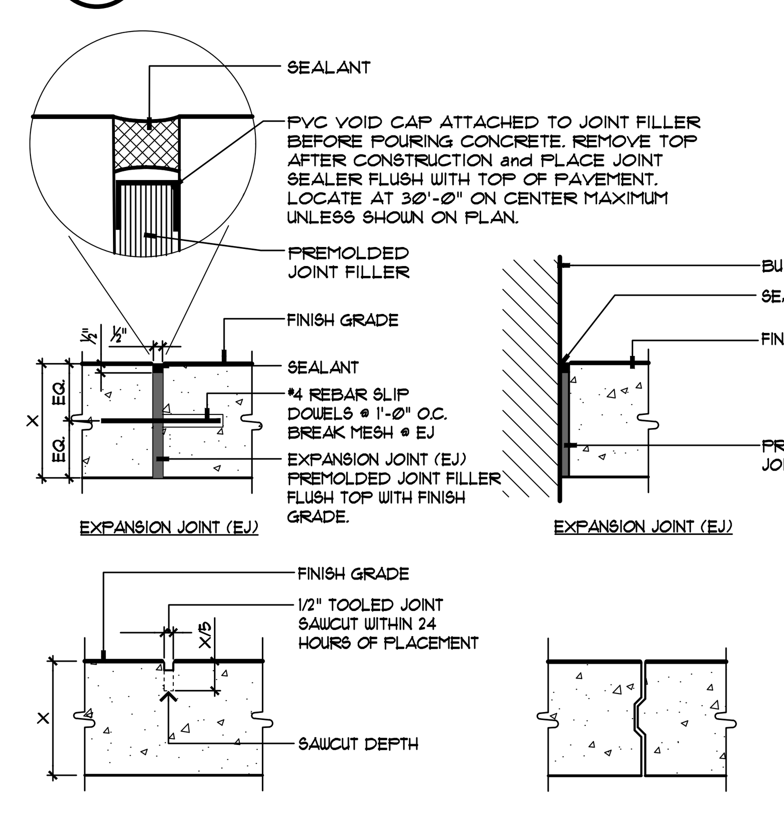

NOTE: WHERE NEW CONCRETE WALK PAVEMENT ABUTS EXISTING CONCRETE WALK PAVEMENT, CORE DRILL AND EPOXY REBAR SIMILAR TO EXPANSION JOINT SECTION.

SECTION

6 / L6.0 CONCRETE JOINT DETAILS

NOT TO SCALE — 32-1313-04

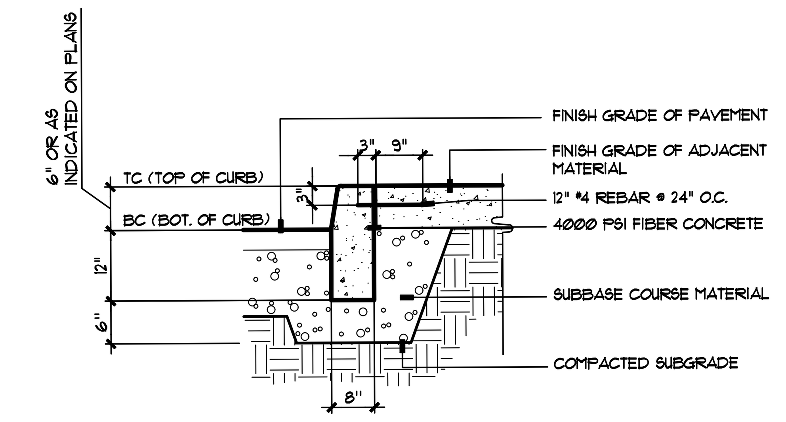

SECTION

5 / L6.0 CONCRETE CURB and PAVEMENT

NOT TO SCALE — 32-1313-04A

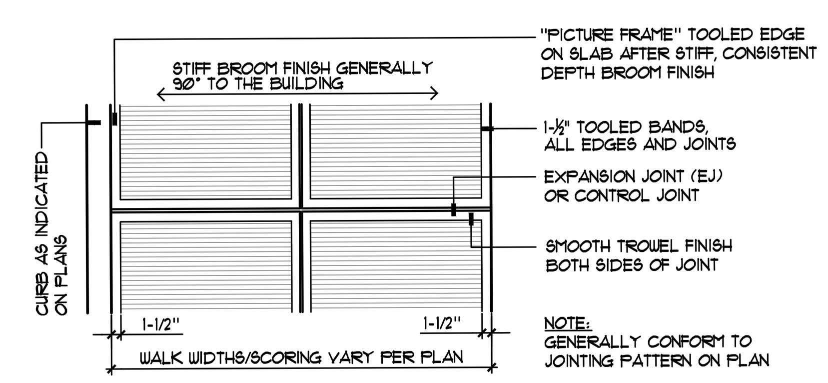

NOTE:
GENERALLY CONFORM TO JOINTING PATTERN ON PLAN

PLAN

4 / L6.0 CONCRETE FINISH

NOT TO SCALE — 32-1313-03

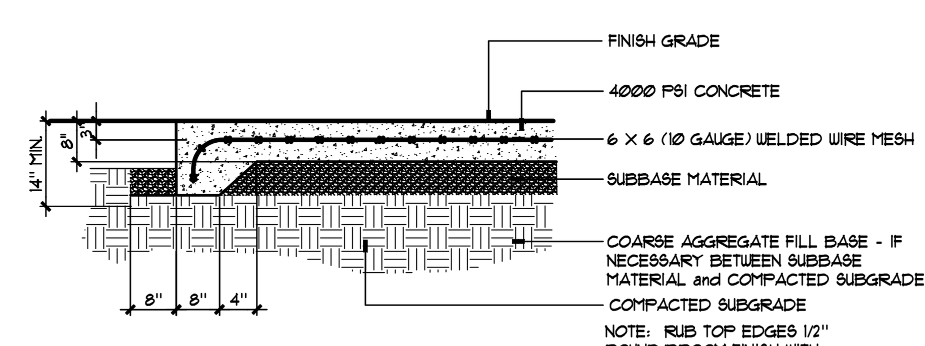

SECTION

3 / L6.0 CONCRETE PAVEMENT- HEAVY DUTY

NOT TO SCALE — 32-1313-02D

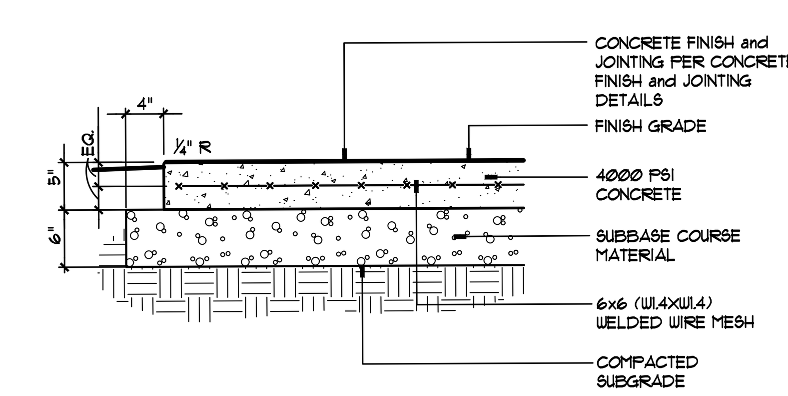

SECTION

2 / L6.0 CONCRETE PAVEMENT

NOT TO SCALE — 32-1313-01

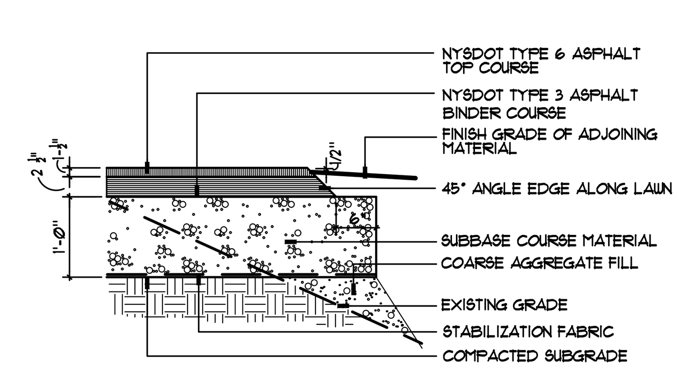

SECTION

1 / L6.0 ASPHALT PAVEMENT - PARKING

NOT TO SCALE — 32-1216-02

ZAUSMER · FRISCH SCRUTON & AGGARWAL
DESIGNERS / BUILDERS
219 BURNET AVENUE / SYRACUSE / NEW YORK 13203
TEL (315) 475-8404 / FAX (315) 475-8470 / E-MAIL zisa@zausmerfrisch.com

KEPLINGER FREEMAN ASSOCIATES
LANDSCAPE ARCHITECTURE & LAND PLANNING
6320 FLY ROAD, SUITE 109 EAST SYRACUSE, NEW YORK 13057
PHONE: (315) 445-7980 FAX: (315) 445-7981

PROJECT:
435 STATE STREET DEVELOPMENT
435 WEST STATE STREET
BINGHAMTON, NEW YORK

TITLE:
DETAIL SHEET

REGISTERED LANDSCAPE ARCHITECT · EDWARD GILBERT KEPLINGER · 001634 · STATE OF NEW YORK

PROGRESS PRINT
NOT FOR CONSTRUCTION

IT IS A VIOLATION OF LAW FOR ANY PERSON, UNLESS ACTING UNDER THE DIRECTION OF A LICENSED ARCHITECT TO ALTER ANY ITEM ON THIS DOCUMENT IN ANY WAY. ANY LICENSEE WHO ALTERS THIS DOCUMENT IS REQUIRED BY LAW TO AFFIX HIS OR HER SEAL AND THE NOTATION "ALTERED BY" FOLLOWED BY HIS OR HER SIGNATURE AND A SPECIFIC DESCRIPTION OF THE ALTERATIONS.

DATE	SCALE
10-12-16	AS NOTED
PROJECT NUMBER 36087	DRAWN BY MDL

SHEET NUMBER
L6.0

REVISIONS

10/28/16 GENERAL REVISIONS	MDL	
12/7/16 MISC. REVISIONS	MDL	
6/5/18 BLDG. REVISIONS	MDL	
6/26/18 SITE REVISIONS	VER	

D:\00-projects\36087 - ZF Binghamton\CADD\L6.0 - Details.dwg

NOTES

LINING FOR GRAVITY SEWERS SHALL CONSIST OF CLEAN, SOUND, CRUSHED STONE and SHALL BE DETERMINED BY THE MAGNESIUM SULFATE SOUNDNESS TEST. THE MAXIMUM PERCENT LOSS AT FOUR CYCLES, BY WEIGHT, SHALL BE 20%.

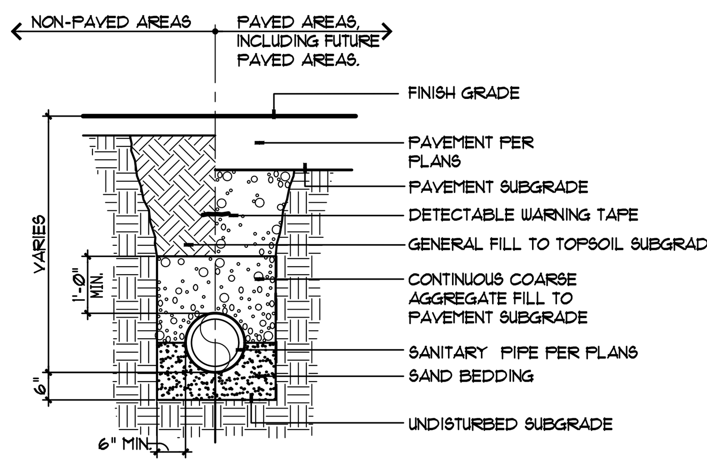

SECTION

8 / L6.1 SANITARY SEWER PIPE BEDDING
NOT TO SCALE 33-3913-12A

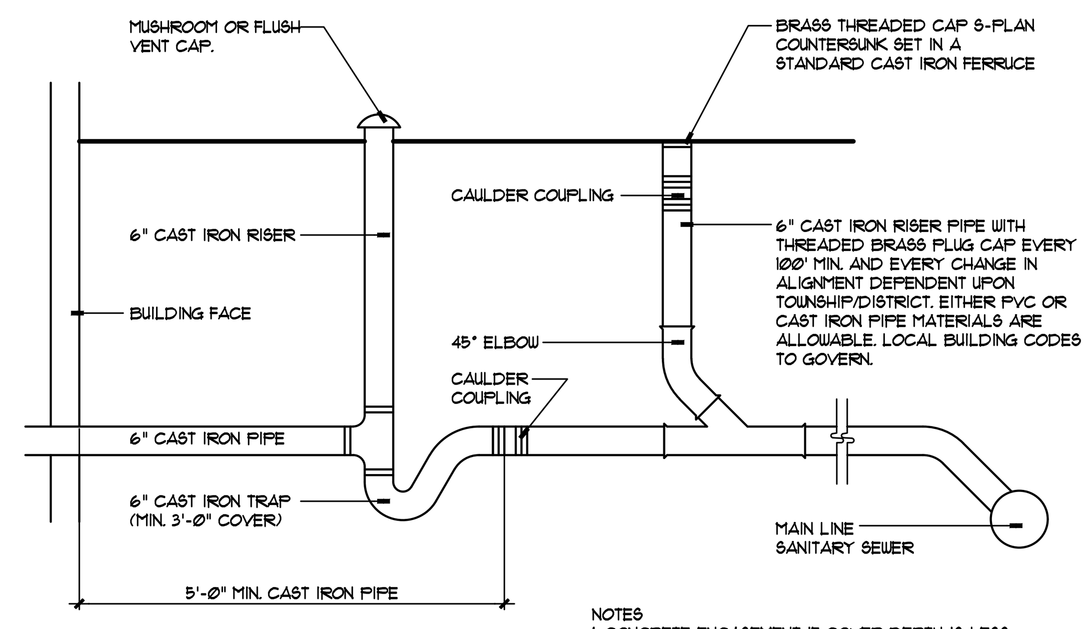

NOTES
1. CONCRETE ENCASEMENT IF COVER DEPTH IS LESS THAN 4'-0" UNDER PAVED AREAS.
2. MINIMUM DEPTH OF COVER IS 3'-0"
3. COVER FOR CLEANOUTS LOCATED IN PAVED AREAS TO BE NEENAH FOUNDRY SERIES 1978 OR APPROVED EQUAL.

7 / L6.1 COMMERCIAL SERVICE TRAP and VENT (IN LAWN AREAS)
NOT TO SCALE 33-3913-02B

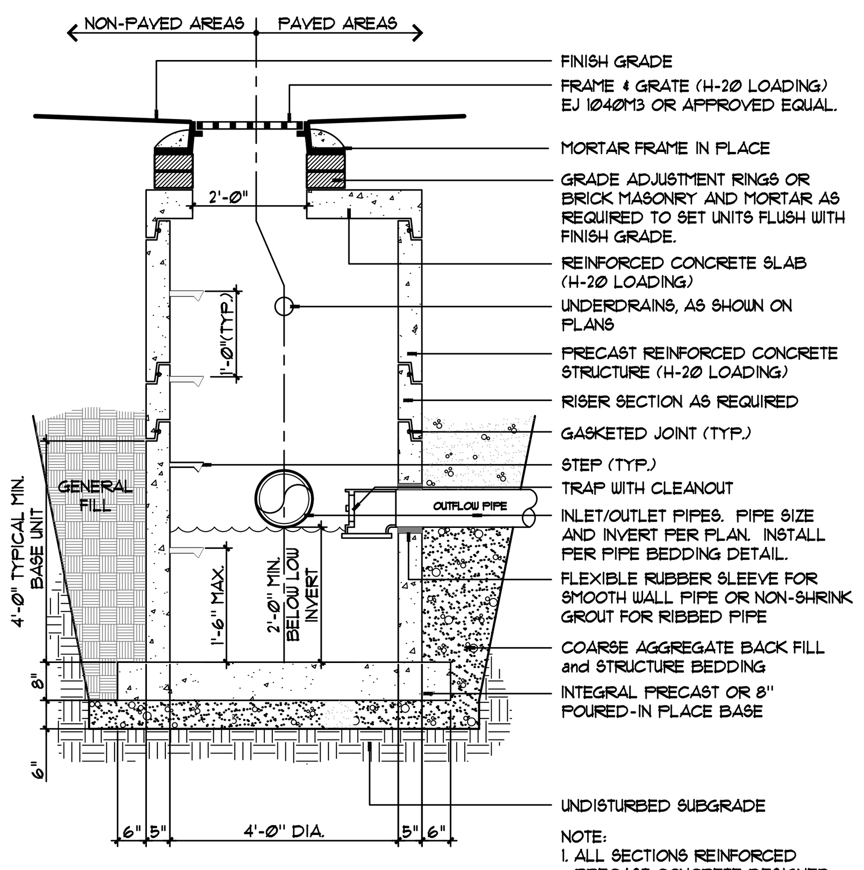

NOTE:
1. ALL SECTIONS REINFORCED PRECAST CONCRETE DESIGNED FOR H-20 LOADING.

SECTION

5 / L6.1 CATCH BASIN (CB)
NOT TO SCALE 33-4000-02

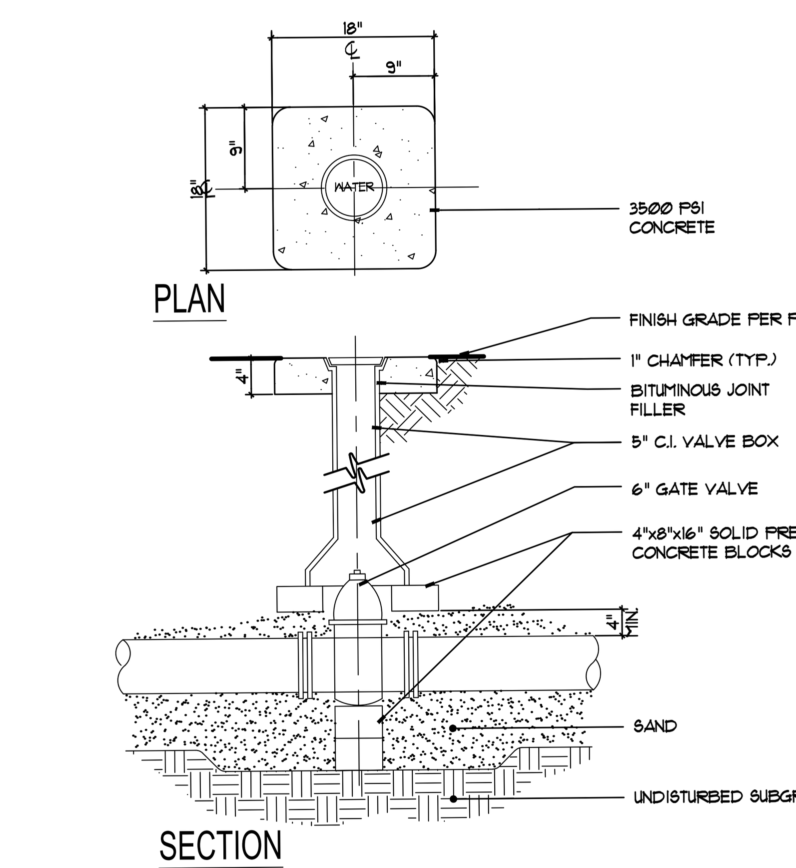

2 / L6.1 GATE VALVE
NOT TO SCALE 33-1216-04

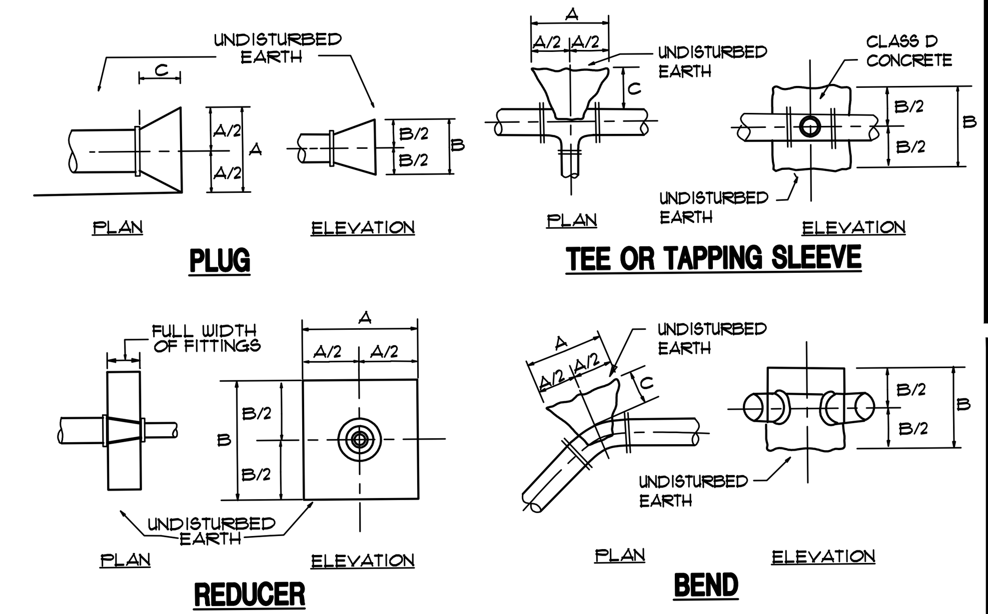

CONCRETE ANCHOR & THRUST BLOCK DIMENSIONS															
SIZE	16"			10"			8"			6"			4" or Smaller		
	A	B	C	A	B	C	A	B	C	A	B	C	A	B	C
90° BEND	4'-0"	4'-0"	1'-9"	3'-0"	3'-0"	1'-6"	2'-6"	2'-6"	1'-3"	2'-0"	2'-0"	1'-0"	1'-6"	1'-6"	1'-0"
45° BEND	3'-6"	3'-6"	1'-9"	2'-6"	2'-6"	1'-3"	2'-0"	2'-0"	1'-0"	1'-6"	1'-6"	1'-0"	1'-3"	1'-3"	0'-9"
22 1/2° BEND	2'-6"	2'-6"	1'-9"	2'-0"	2'-0"	1'-0"	1'-6"	1'-6"	1'-0"	1'-3"	1'-3"	0'-9"	1'-0"	1'-0"	0'-6"
11 1/4° BEND	2'-0"	2'-0"	1'-3"	1'-6"	1'-6"	1'-0"	1'-3"	1'-3"	0'-9"	1'-0"	1'-0"	0'-6"	1'-0"	1'-0"	0'-6"
TEE TAPPING SLEEVE OR PLUG	4'-0"	4'-0"	1'-9"	3'-0"	3'-0"	1'-6"	2'-6"	2'-6"	1'-3"	2'-0"	2'-0"	1'-0"	1'-6"	1'-6"	1'-0"
REDUCER 12"x	—	—	—	2'-6"	2'-6"	—	3'-6"	3'-6"	—	4'-0"	4'-0"	—	4'-6"	4'-6"	—
10"x	—	—	—	—	—	—	2'-6"	2'-6"	—	3'-6"	3'-6"	—	4'-0"	4'-0"	—
8"x	—	—	—	—	—	—	—	—	—	2'-0"	2'-0"	—	2'-6"	2'-6"	—
6"x	—	—	—	—	—	—	—	—	—	2'-0"	—	—	2'-3"	2'-3"	—

THRUST BLOCK NOTES:

1. FOR REQUIRED BEARING AREA DIMENSIONS A & B SEE TABLE. DIMENSIONS OF A & B OTHER THAN THOSE SHOWN IN THE TABLE MAY BE USED PROVIDED THEY YIELD A BEARING AREA EQUAL TO OR LARGR THAN THAT REQUIRED.

2. CONCRETE NOT TO OVERLAP ANY JOINT.

3. CONCRETE TO BE PLACED SO AS NOT TO INTERFERE WITH REMOVING OR INSTALLING ANY OF THE JOINTING HARDWARE.

4. APPROXIMATE VOLUME OF CONCRETE THRUST BLOCK:

$$V = \frac{LD(W + ID) - ID}{81}$$

WHERE: V = VOLUME IN CUBIC YARDS
L = LENGTH OF BLOCK IN FEET
D = DEPTH OF BLOCK IN FEET
W = WIDTH OF BLOCK IN FEET
ID = INSIDE DIAMETER OF PIPE IN FEET

5. VALUES FOR TEE ALSO APPLY TO END PLUGS, CAPS, AND TAPPING SLEEVES.

6. REQUIRED BEARING AREAS ARE DUE TO THRUSTS CAUSED BY 150 PSI WORKING PRESSURE PLUS 50% (75 PSI) SURGE ALLOWANCE RESULTING IN 225 PSI TOTAL INTERNAL PRESSURE. NOMINAL PIPE DIAMETER USED.

7. REQUIRED BEARING AREAS ARE BASED ON ALLOWABLE SOIL BEARING CAPACITY OF 3000 LBS. PER SQUARE FOOT. IF POORER SOIL BEARING CONDITIONS ARE ENCOUNTERED, REQUIRED BEARING AREAS MAY BE MODIFIED BY THE ENGINEER.

8. IN MUCK, PEAT, OR RECENTLY PLACED FILL, ALL THRUST SHALL BE RESISTED BY PILES OR TIE RODS TO SOLID FOUNDATIONS, OR BY REMOVAL OF SUCH UNSTABLE MATERIAL AND REPLACEMENT WITH BALLAST OF SUFFICIENT STABILITY TO RESIST THE THRUSTS, ALL AS REQUIRED BY THE ENGINEER.

9. THRUST RESTRAINT FOR VERTICAL BENDS IN WATER PIPING SHALL BE PROVIDED BY MEANS OF RESTRAINED MECHANICAL JOINTS AND/OR RODDING TO ADJACENT PIPE JOINTS (WITH POLYWRAP). METHOD TO BE APPROVED BY THE ENGINEER.

1 / L6.1 THRUST BLOCK DETAILS
NOT TO SCALE 33-1216-08

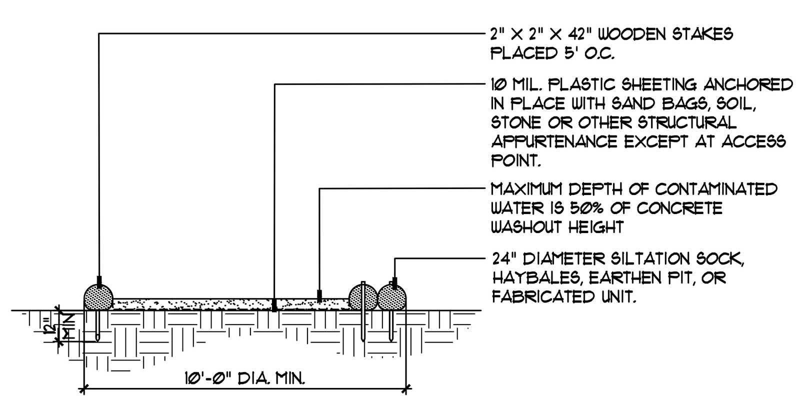

SECTION

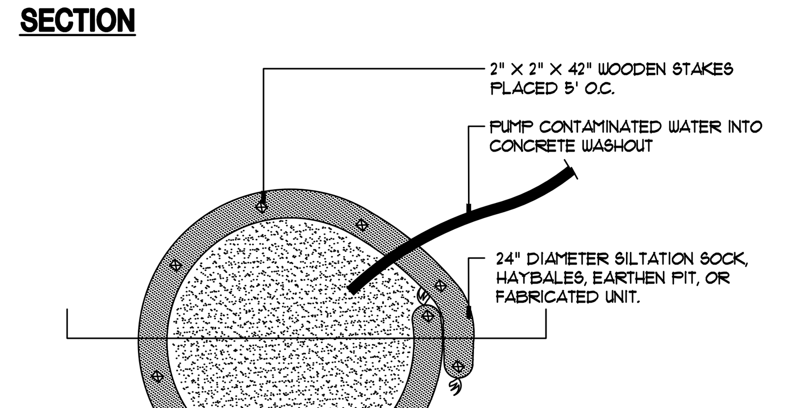

PLAN

NOTES:
1. INSTALL ON FLAT GRADE FOR OPTIMUM PERFORMANCE.
2. ALL CONCRETE WASHOUT FACILITIES SHALL BE INSPECTED DAILY. DAMAGED OR LEAKING FACILITIES SHALL BE DEACTIVATED AND REPAIRED OR REPLACED IMMEDIATELY. EXCESS RAINWATER THAT HAS ACCUMULATED OVER HARDENED CONCRETE SHOULD BE PUMPED TO A STABILIZED AREA, SUCH AS GRASS FILTER STRIP.
3. ACCUMULATED HARDENED MATERIAL SHALL BE REMOVED WHEN 75% OF STORAGE CAPACITY OF THE STRUCTURE IS FILLED. ANY EXCESS WASH WATER SHALL BE PUMPED INTO A CONTAINMENT VESSEL AND PROPERLY DISPOSED OF OFF SITE.
4. DISPOSE OF HARDENED MATERIAL OFF SITE IN A CONSTRUCTION/DEMOLITION FILL LANDFILL. ON-SITE DISPOSAL MAY BE ALLOWED IF THIS HAS BEEN APPROVED AND ACCE¾TED AS PART OF THE SWPPP. IN THE CASE, THE MATERIAL SHOULD BE RECYCLED AS SPECIFIED, OR BURIED AND COVERED WITH A MINIMUM OF 2 FEET OF CLEAN COMPACTED EARTHFILL THAT IS PERMANENTLY STABILIZED TO PREVENT EROSION.
5. THE PLASTIC LINER SHALL BE REPLACED WITH EACH CLEANING OF WASHOUT FACILITY.
6. INSPECT THE PROJECT SITE FREQUENTLY TO ENSURE THAT NO CONCRETE DISCHARGES ARE TAKING PLACE IN NON-DESIGNATED AREAS.

9 / L6.1 CONCRETE WASHOUT
NOT TO SCALE 31-3001-10

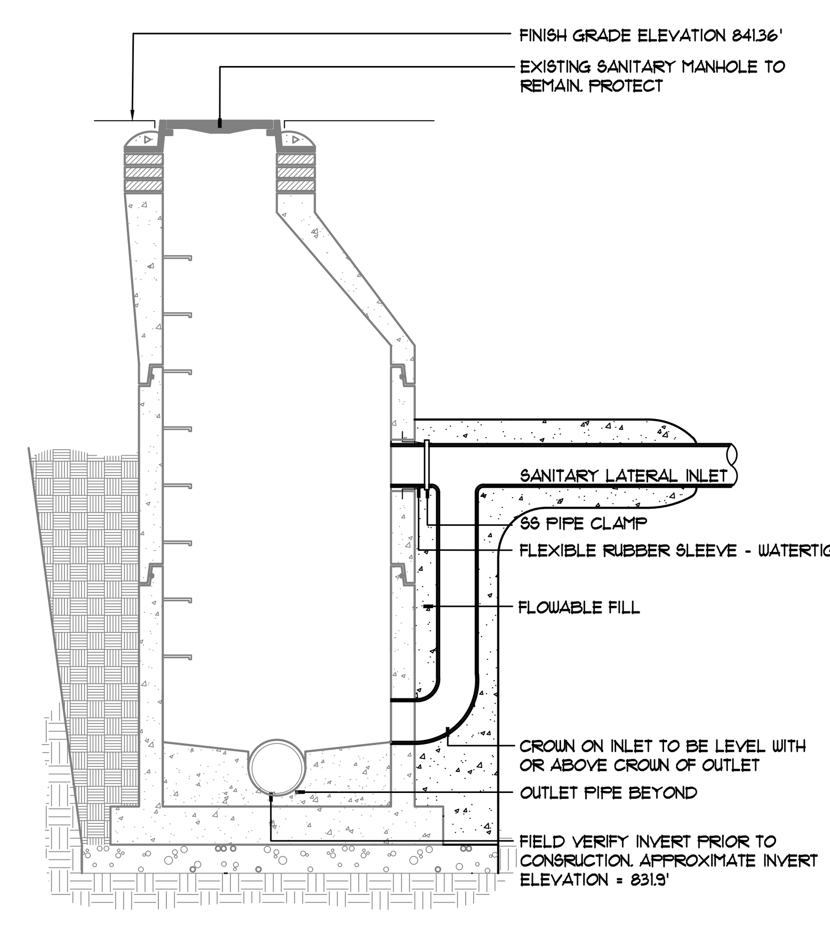

NOTES:
1. FIELD VERIFY INVERTS PRIOR TO CONSTRUCTION.
2. INSTALL NON-SHRINK GROUT IN ALL SECTION JOINTS.

SECTION

6 / L6.1 EXTERIOR DROP MANHOLE
NOT TO SCALE

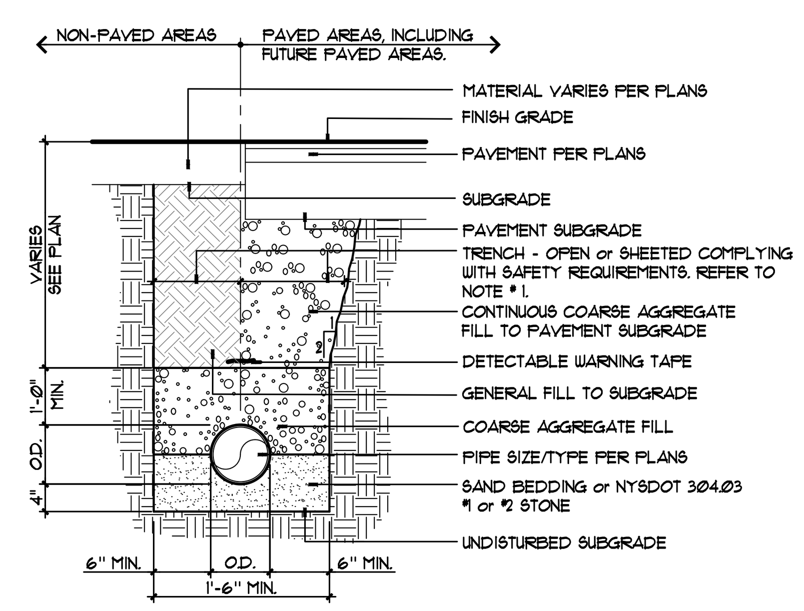

SECTION

NOTES:
1. TRENCH DEPTHS, WIDTHS, SHEETING, SHORING, BRACING and CUTBACK SLOPES TO BE DETERMINED BY THE CONTRACTOR and COMPLY WITH O.S.H.A., NEW YORK STATE DEPARTMENT OF LABOR, NEW YORK STATE INDUSTRIAL CODE and ALL OTHER APPLICABLE SAFETY STANDARDS.
2. REFER TO PLAN FOR PAVED and NON PAVED DETAILS.

4 / L6.1 PIPE BEDDING
NOT TO SCALE 33-4000-20A

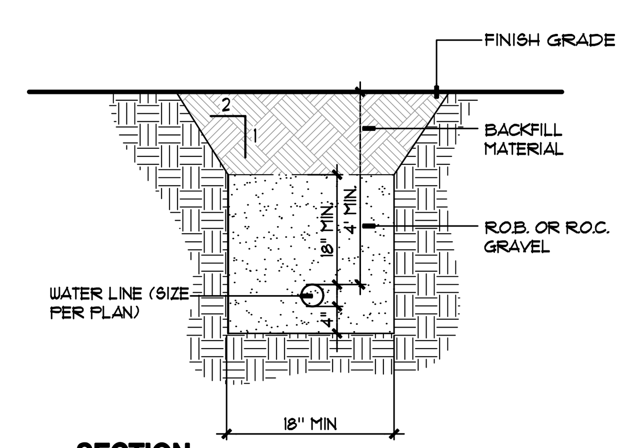

SECTION

3 / L6.1 WATER LINE TRENCH
NOT TO SCALE 33-1216-10B

ZAUSMER · FRISCH SCRUTON & AGGARWAL
DESIGNERS / BUILDERS
219 BURNET AVENUE / SYRACUSE / NEW YORK 13203
TEL: (315) 475-8404 / FAX: (315) 475-8470 / E-MAIL: zfsa@zausmerfrisch.com

KEPLINGER FREEMAN ASSOCIATES
LANDSCAPE ARCHITECTURE & LAND PLANNING
6320 FLY ROAD, SUITE 109 EAST SYRACUSE, NEW YORK 13057
PHONE: (315) 445-7980 FAX: (315) 445-7981

PROJECT:
435 STATE STREET DEVELOPMENT
435 WEST STATE STREET
BINGHAMTON, NEW YORK

TITLE:
DETAIL SHEET

PROGRESS PRINT
NOT FOR CONSTRUCTION

IT IS A VIOLATION OF LAW FOR ANY PERSON, UNLESS ACTING UNDER THE DIRECTION OF A LICENSED ARCHITECT TO ALTER ANY ITEM ON THIS DOCUMENT IN ANY WAY. ANY LICENSEE WHO ALTERS THIS DOCUMENT IS REQUIRED BY LAW TO AFFIX HIS OR HER SEAL AND THE NOTATION "ALTERED BY" FOLLOWED BY HIS OR HER SIGNATURE AND A SPECIFIC DESCRIPTION OF THE ALTERATIONS.

DATE	SCALE
10-12-16	AS NOTED
PROJECT NUMBER 36087	DRAWN BY MDL

SHEET NUMBER
L6.1

REVISIONS		
10/28/16 GENERAL REVISIONS	MDL	
12/7/16 MISC. REVISIONS	MDL	
6/5/18 BLDG. REVISIONS	MDL	
6/26/18 SITE REVISIONS	VER	

D:\00-projects\36087 - ZF Binghamton\CADD\L6.0 - Details.dwg

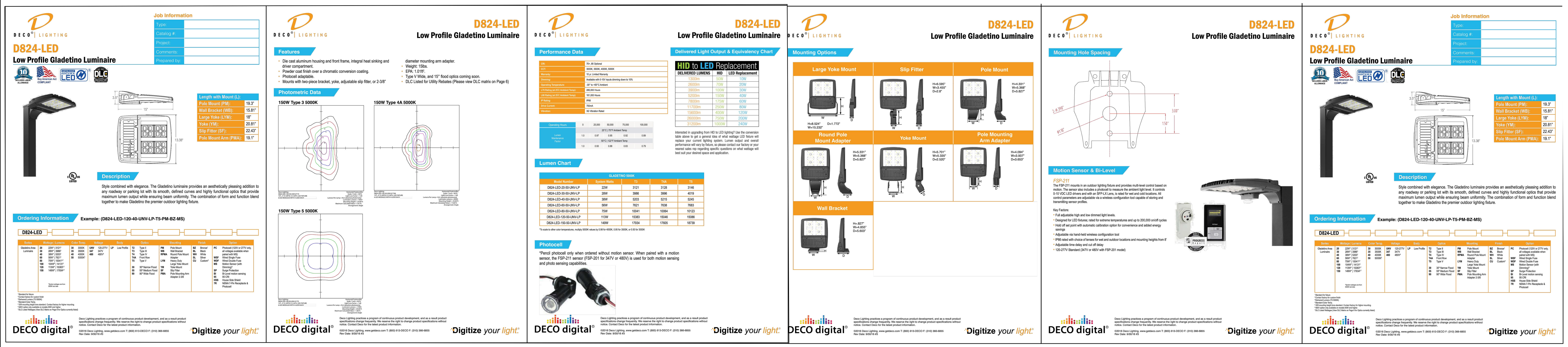

DECO® | LIGHTING

Job Information

Type:	
Catalog #:	
Project:	
Comments:	
Prepared by:	

D824-LED
Low Profile Gladetino Luminaire

Length with Mount (L):	
Pole Mount (PM):	19.3"
Wall Bracket (WB):	15.81"
Large Yoke (LYM):	18"
Yoke (YM):	20.81"
Slip Fitter (SF):	22.43"
Pole Mount Arm (PMA):	19.1"

Description

Style combined with elegance. The Gladetino luminaire provides an aesthetically pleasing addition to any roadway or parking lot with its smooth, defined curves and highly functional optics that provide maximum lumen output while ensuring beam uniformity. The combination of form and function blend together to make Gladetino the premier outdoor lighting fixture.

Ordering Information Example: (D824-LED-120-40-UNV-LP-T5-PM-BZ-MS)

Series	Wattage / Lumens	Color Temp.	Voltage	Body	Optics	Mounting	Finish	Option
Gladetino Area Luminaire	20 22W / 3121; 30 28W / 3986; 40 38W / 5203; 60 56W / 7621; 80 75W / 10041; 100 104W / 14131; 120 113W / 15383; 150 149W / 17934	30 3000K; 35 3500K; 40 4000K; 50 5000K	UNV 120-277V; 347 347V; 480 480V	LP Low Profile	T2 Type II; T3 Type III; T4 Type IV; T4A Front Row; T5 Type V; 30 30° Narrow Flood; 55 55° Medium Flood; 90 90° Wide Flood	PM Pole Mount; WB Wall Bracket; RPMA Round Pole Mount Adapter; LYM Heavy Duty Large Yoke Mount; YM Yoke Mount; SF Slip Fitter; PMA Pole Mounting Arm Adapter 2-3/8	BZ Bronze; BL Black; WH White; SL Silver; CU Custom	PC Photocell (120V or 277V only, all voltages available when paired with MS); WSF Wired Single Fuse; WDF Wired Double Fuse; MS Motion Sensor (with Dimming); SP Surge Protection; BI Bi-Level motion sensing; 95 95 CRI; HSS House Side Shield; 7R NEMA 7-Pin Receptacle & Photocell

Features

- Die cast aluminum housing and front frame, integral heat sinking and driver compartment.
- Powder coat finish over a chromatic conversion coating.
- Photocell adaptable.
- Mounts with two-piece bracket, yoke, adjustable slip fitter, or 2-3/8" diameter mounting arm adapter.
- Weight: 15lbs.
- EPA: 1.01ft².
- Type V Wide, and 15° flood optics coming soon.
- DLC Listed for Utility Rebates (Please view DLC matrix on Page 6)

Photometric Data

150W Type 3 5000K; 150W Type 4A 5000K; 150W Type 5 5000K

Performance Data · **Delivered Light Output & Equivalency Chart**

HID to LED Replacement

DELIVERED LUMENS	HID	LED Replacement
1300lm	50W	10W
2600lm	70W	20W
3900lm	100W	30W
5200lm	150W	40W
7800lm	175W	60W
11700lm	250W	80W
15600lm	400W	120W
26000lm	750W	200W
31200lm	1000W	240W

Lumen Chart (GLADETINO 5000K)

Model Number	System Watts	T3	T4A	T5
D824-LED-20-50-UNV-LP	22W	3121	3128	3146
D824-LED-30-50-UNV-LP	28W	3986	3996	4019
D824-LED-40-50-UNV-LP	38W	5203	5215	5245
D824-LED-60-50-UNV-LP	56W	7621	7638	7683
D824-LED-80-50-UNV-LP	75W	10041	10064	10123
D824-LED-120-50-UNV-LP	113W	15383	15046	15086
D824-LED-150-50-UNV-LP	149W	17934	17605	18739

Photocell

*Pencil photocell only when ordered without motion sensor. When paired with a motion sensor, the FSP-211 sensor (FSP-201 for 347V or 480V) is used for both motion sensing and photo sensing capabilities.

Mounting Options: Large Yoke Mount; Slip Fitter; Pole Mount; Round Pole Mount Adapter; Yoke Mount; Pole Mounting Arm Adapter; Wall Bracket

Mounting Hole Spacing

Motion Sensor & Bi-Level

FSP-211

Key Factors:
- Full adjustable high and low dimmed light levels.
- Designed for LED fixtures; rated for extreme temperatures and up to 200,000 on/off cycles
- Hold off set point with automatic calibration option for convenience and added energy savings
- Adjustable via hand-held wireless configuration tool
- IP66 rated with choice of lenses for wet and outdoor locations and mounting heights from 8'
- Adjustable time delay and cut off delay
- 120-277V Standard (347V or 480V with FSP-201 model)

DECO digital® · Digitize *your light*®

©2016 Deco Lighting, www.getdeco.com T: (800) 613-DECO F: (310) 366-6855 Rev Date: 9/30/16 #3

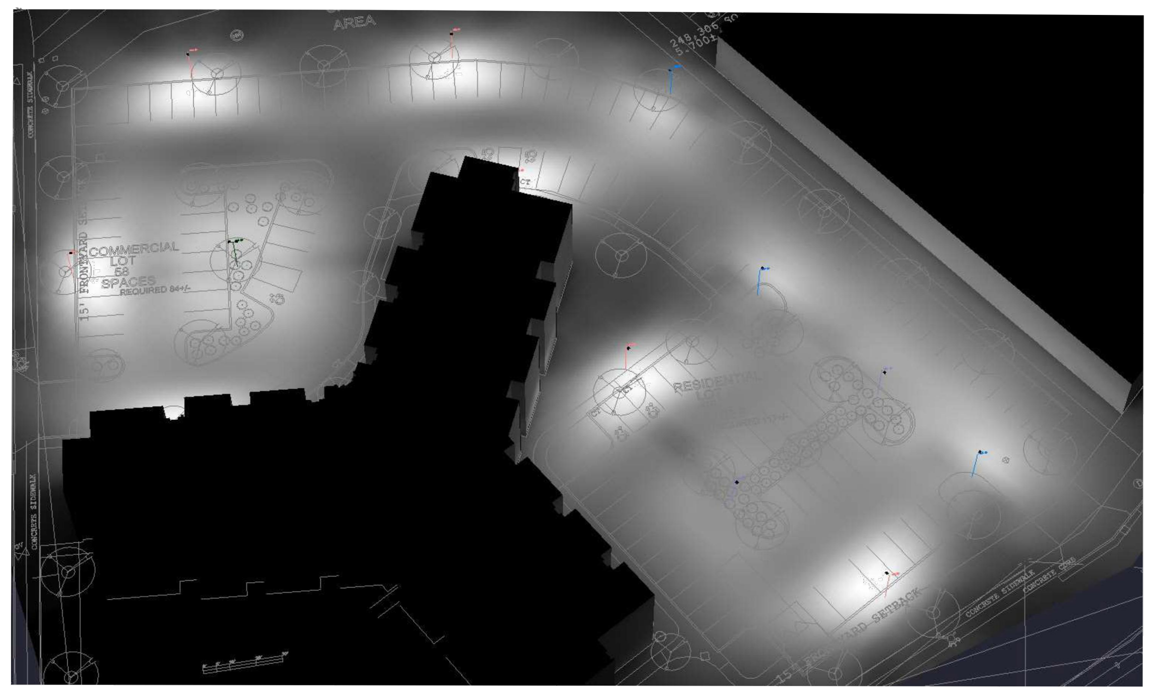

Calculation Summary							
Label	CalcType	Units	Avg	Max	Min	Avg/Min	Max/Min
CalcPts_1	Illuminance	Fc	1.79	9.5	0.0	N.A.	N.A.
PROP LINE	Illuminance	Fc	0.36	0.9	0.0	N.A.	N.A.
MAIN	Illuminance	Fc	2.57	3.0	2.3	1.12	1.30
PERIMETER	Illuminance	Fc	4.33	8.8	1.2	3.61	7.33

Luminaire Schedule

Symbol	Qty	Label	Arrangement	LLF	Description	Lum. Watts	BUG Rating
	7	1-T3	SINGLE	0.950	DECO LIGHTING D824-LED-120-50-UNV-LP-T3-SINGLE @ 20' MTG. HT.	112	B3-U1-G3
	3	1-T3-1	SINGLE	0.950	DECO LIGHTING D824-LED-120-50-UNV-LP-T3-SINGLE SF @ 20' MTG. HT. 35º tilt	112	B3-U1-G3
	2	1-T5	SINGLE	0.950	DECO LIGHTING D824-LED-120-50-UNV-LP-T5-TWIN @ 20' MTG. HT.	112	B4-U1-G2
	1	2	BACK-BACK	0.950	DECO LIGHTING D824-LED-120-50-UNV-LP-T5-TWIN @ 20' MTG. HT.	112	B4-U1-G2

ZAUSMER · FRISCH SCRUTON & AGGARWAL
DESIGNERS / BUILDERS
219 BURNET AVENUE / SYRACUSE / NEW YORK 13203
TEL (315) 475-8404 / FAX (315) 475-8470 / E-MAIL zfsa@zausmerfrisch.com

KEPLINGER FREEMAN ASSOCIATES
LANDSCAPE ARCHITECTURE & LAND PLANNING
6320 FLY ROAD, SUITE 109 EAST SYRACUSE, NEW YORK 13057
PHONE: (315) 445-7980 FAX: (315) 445-7981

PROJECT:
435 STATE STREET DEVELOPMENT
435 WEST STATE STREET
BINGHAMTON, NEW YORK

TITLE:
LIGHTING PLAN

REGISTERED LANDSCAPE ARCHITECT · EDWARD GILBERT KEPLINGER · 001634 · STATE OF NEW YORK

PROGRESS PRINT
NOT FOR CONSTRUCTION

IT IS A VIOLATION OF LAW FOR ANY PERSON, UNLESS ACTING UNDER THE DIRECTION OF A LICENSED ARCHITECT TO ALTER ANY ITEM ON THIS DOCUMENT IN ANY WAY. ANY LICENSEE WHO ALTERS THIS DOCUMENT IS REQUIRED BY LAW TO AFFIX HIS OR HER SEAL AND THE NOTATION "ALTERED BY" FOLLOWED BY HIS OR HER SIGNATURE AND A SPECIFIC DESCRIPTION OF THE ALTERATIONS.

DATE	SCALE
10-12-16	AS NOTED
PROJECT NUMBER 36087	DRAWN BY MDL

SHEET NUMBER
L7.0

REVISIONS

10/28/16 GENERAL REVISIONS	MDL	
12/7/16 MISC. REVISIONS	MDL	
6/5/18 BLDG. REVISIONS	MDL	
6/26/18 SITE REVISIONS	VER	

D:\00-projects\36087 - ZF Binghamton\CADD\L7.0 - Lighting Plan.dwg

NEW YORK STATE DEPARTMENT OF ENVIRONMENTAL CONSERVATION

Division of Water, Bureau of Permits
625 Broadway, Albany, New York 12233-3505
P: (518) 402-8111 | F: (518) 402-9029
www.dec.ny.gov

JUL 16 2018

7/12/2018

Community Potential, Inc.
David Tanenhaus
35 Exchange Street
Binghamton, NY 13901

Re ACKNOWLEDGMENT of NOTICE of INTENT for Coverage Under SPDES General Permit for Storm Water Discharges from CONSTRUCTION ACTIVITY General Permit No. GP-0-15-002

Dear Prospective Permittee:

This is to acknowledge that the New York State Department of Environmental Conservation (Department) has received a complete Notice of Intent (NOI) for coverage under General Permit No. GP-0-15-002 for the construction activities located at:

Binghamton Housing
435 State Street
Binghamton, NY 13901 County: **BROOME**

Pursuant to Environmental Conservation Law (ECL) Article 17, Titles 7 and 8, ECL Article 70, discharges in accordance with GP-0-15-002 from the above construction site will be authorized **5** business days from **07/09/2018**, which is the date we received your final NOI, unless notified differently by the Department.

The permit identification number for this site is: **NYR11D943**. Be sure to include this permit identification number on any forms or correspondence you send us. When coverage under the permit is no longer needed, you must submit a Notice of Termination to the Department.

This authorization is conditioned upon the following:

1. The information submitted in the NOI received by the Department on **07/09/2018** is accurate and complete.

2. You have developed a Stormwater Pollution Prevention Plan (SWPPP) that complies with GP-0-15-002 which must be implemented as the first element of construction at the above-noted construction site.

3. Activities related to the above construction site comply with all other requirements of GP-0-15-002.

4. Payment of the annual $110 regulatory fee, which is billed separately by the Department in the late fall. The regulatory fee covers a period of one calendar year. In addition, since September 1, 2004, construction stormwater permittees have been assessed an initial authorization fee which is now $110 per acre of land disturbed and $675 per acre of future impervious area. The initial authorization fee covers the duration of the authorized disturbance.

5. Your SWPPP has been reviewed by the regulated, traditional land use control MS4 where your project is located and has been determined to be in substantive conformance with the requirements in the SPDES General Permit for Stormwater Discharges from MS4s.

6. When applicable, project review pursuant to the State Environmental Quality Review Act (SEQRA) has been satisfied.

7. You have obtained all necessary Department permits subject to the Uniform Procedures Act (UPA). You should check with your Regional Permit Administrator for further information.

***Note: Construction activities cannot commence until project review pursuant to SEQRA has been satisfied, when SEQRA is applicable; and, where required, all necessary Department permits subject to the UPA have been obtained.**

Please be advised that the Department may request a copy of your SWPPP for review.

Should you have any questions regarding any aspect of the requirements specified in GP-0-15-002, please contact Dave Gasper at (518) 402-8114 or the undersigned at (518) 402-8109.

Sincerely,

Toni Cioffi

Toni Cioffi
Environmental Program Specialist 1

PLEASE NOTE: EPA HAS FINALIZED THE eREPORTING RULE; AND, IN THE NEAR FUTURE, ALL NOIs WILL HAVE TO BE SUBMITTED ELECTRONICALLY.
BY FILING AN NOI ELECTRONICALLY, A PROJECT CAN TYPICALLY GAIN COVERAGE IN 5 BUSINESS DAYS COMPARED TO 10 BUSINESS DAYS FOR THE PAPER NOI.
INFORMATION ON THE eNOI CAN BE FOUND ON OUR WEBSITE AT:
http://www.dec.ny.gov/chemical/43133.html UNDER "FORMS."

cc RWE - **7**
SWPPP Preparer

RZ Engineering, PLLC
Zona Rudy
6320 Fly Road Suite 109
East Syracuse, New York 13057