Carlls River Tributary Watershed Infrastructure Improvements Project

Town of Babylon/Village of Babylon

Suffolk County, New York

Environmental Assessment

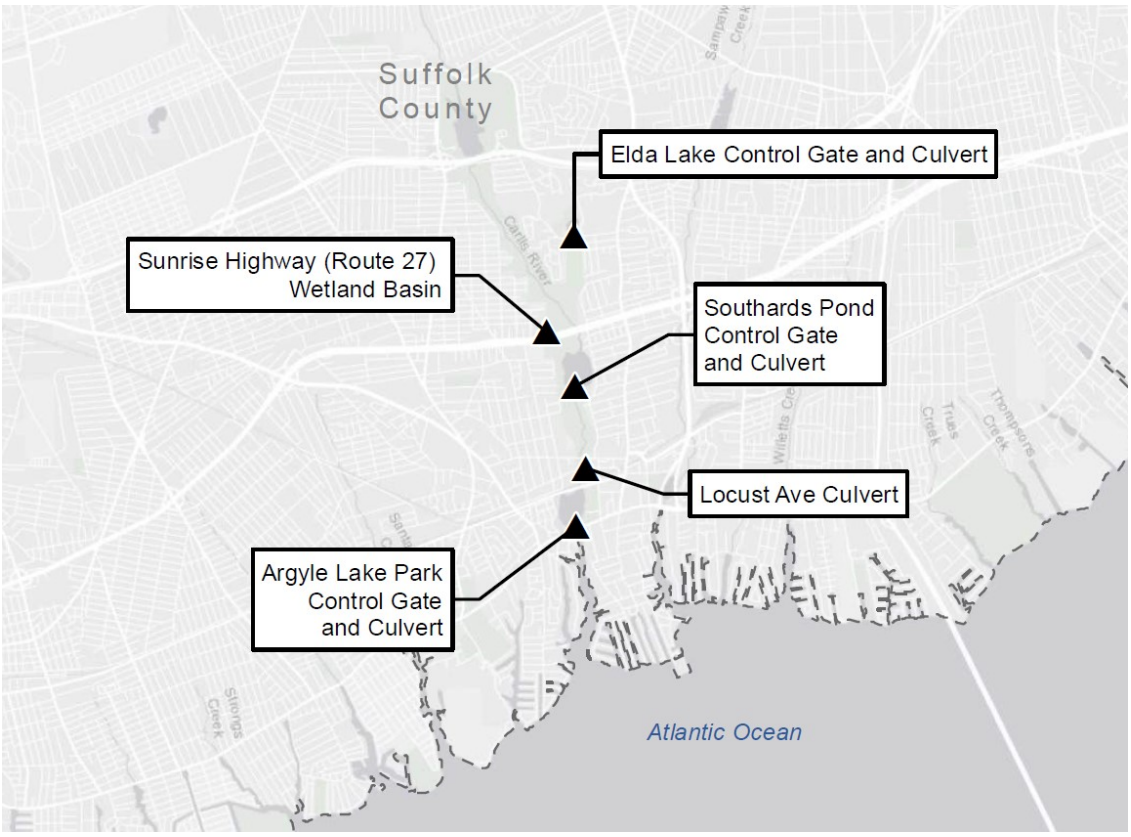

U.S. Department of Housing and Urban Development
New York State Homes and Community Renewal
New York State Governor's Office of Storm Recovery
December 10, 2019

Carlls River Tributary Watershed Infrastructure Improvements Project

Environmental Assessment

December 10, 2019

Project Name: Carlls River Tributary Watershed Infrastructure Improvements Program

Project Location: Multiple Locations within the Hamlet of West Babylon, NY 11704; Hamlet of North Babylon, NY 11703: and Village of Babylon, NY 11702

1. North side of Sunrise Highway (NYS Route 27) at Harvard Road, West Babylon
2. Elda Lake, Phelps Lane Park, 151 Phelps Lane, North Babylon
3. Southard's Pond, Southard's Pond Park, Babylon Village
4. Argyle Lake, Argyle Lake Park, West Main Street, Babylon Village
5. Locust Avenue Culvert, Locust Avenue, Southard's Pond Park, Babylon Village

Federal Agency: US Department of Housing and Urban Development
Responsible Entity: New York State Homes and Community Renewal
New York State Governor's Office of Storm Recovery

Responsible Agency's Certifying Officer: Lori A. Shirley, Certifying Officer
Governor's Office of Storm Recovery (GOSR)
38-40 State Street, Hampton Plaza
Albany, New York 12207
(518) 474-0755 Lori.Shirley@nyshcr.org

Project Sponsor: Town of Babylon
Primary Contact: Richard Groh, Chief Environmental Analyst
200 East Sunrise Highway, Lindenhurst, NY 11757
631.422.7640, rgoh@townofbabylon.com

Project NEPA Classification: 24 CFR 58.36 (Environmental Assessment)

Environmental Finding:	☒ Finding of No Significant Impact - The project will not result in a significant impact on the quality of the human environment.
	☐ Finding of Significant Impact - The project may significantly affect the quality of the human environment.
Certification	The undersigned hereby certifies that New York State Homes and Community Renewal has conducted an environmental review of the project identified above and prepared the attached environmental review record in compliance with all applicable provisions of the National Environmental Policy Act of 1969, as amended (42 USC Sec. 4321 et seq.) and its implementing regulations at 24 CFR Part 58.
Signature	Lori A. Shirley, Certifying Officer, December 10, 2019

Environmental Assessment Prepared By:
The Louis Berger Group, Inc.
96 Morton Street, 8th Floor
New York, NY 10014

GOSR
500 Bi-County Boulevard
Farmingdale, NY 11735

CERTIFICATION OF NEPA CLASSIFICATION

It is the finding of the New York State Housing Trust Fund Corporation that the activity(ies) proposed in its __2019_ NYS CDBG-DR project,
Project Year

Carlls River Tributary Watershed Infrastructure Improvements are:
Project Name

Check the applicable classification.

☐ Exempt as defined in 24 CFR 58.34 (a).

☐ Categorically Excluded as defined in 24 CFR 58.35(b).

☐ Categorically Excluded as defined in 24 CFR 58.35(a) and no activities are affected by federal environmental statues and executive orders [i.e., exempt under 58.34(a)(12)].

☐ Categorically Excluded as defined in 24 CFR 58.35(a) and some activities are affected by federal environmental statues and executive orders.

☒ "Other" neither exempt (24 CFR 58.34(a)) nor categorically excluded (24 CFR 58.35).

☒ Part or all of the project is located in an area identified as a floodplain or wetland. For projects located in a floodplain or wetland, evidence of compliance with Executive Orders 11988 and/or 11990 is required.

Lori A Shirley
Signature of Certifying Officer

12/10/2019
Date

Lori A. Shirley
Print Name

Certifying Officer
Title

CERTIFICATION OF SEQRA CLASSIFICATION

It is the finding of the New York State Housing Trust Fund Corporation that the activity(ies) proposed in its ____2019__ NYS CDBG-DR project,
Project Year

Carlls River Tributary Watershed Infrastructure Improvements constitute a:
Project Name

Check the applicable classification:

- ☒ Type I Action (6NYCRR Section 617.4)
- ☐ Type II Action (6NYCRR Section 617.5)
- ☐ Unlisted Action (not Type I or Type II Action)

Check if applicable:

- ☐ Environmental Impact Statement (EIS) Prepared
  - ☐ Draft EIS
  - ☐ Final EIS

Lori A Shirley
Signature of Certifying Officer

12/10/2019
Date

Lori A. Shirley
Print Name

Certifying Officer
Title

Description of the Proposed Project [24 CFR 50.12 & 58.32; 40 CFR 1508.25]**:**

The Town of Babylon is proposing implementation of five projects within the approximately 38.7 square miles Carlls River tributary watershed in Suffolk County, New York (see **Figure 1**). The Town of Babylon is requesting a total of $6,801,908.00 in CDBG-DR funding the implementation of the watershed improvements which would manage water flow in the Carlls River watershed to avert flooding within the Village of Babylon and the Town of Babylon's hamlet of West Babylon. This multicomponent project will allow water levels within this watershed to be adjusted by means of dams, floodgates, and new stormwater retention wetland areas to increase flood protection and reduce the exposure of major assets and residential areas to severe flooding and flood damage.

Following a hydrologic and hydraulic analyses performed in 2016 as part of a comprehensive watershed engineering study (Town of Babylon Carlls River Tributary/Watershed Study – Alternatives Analysis and Recommendation Report - October 14, 2016 – Appendices K – N), multiple projects were identified based on stakeholder input, ease of implementation/constructability, permitability, and overall effectiveness in addressing the watershed's water quality and/or flood control.

The specific projects are located at various points within the watershed area (See **Figures 2a through 2c**) and are listed below:

Sunrise Highway

At Sunrise Highway (NYS Route 27), drainage improvements to reduce flooding and enhance water quality will consist of the construction of an ecologically diverse 1.5-acre stormwater management facility to capture runoff from the impervious roadway surfaces and recharge it. Proposed enrichments include:

1. Stormwater pre-treatment and approximately .25-acres (+/-10,600 sq.ft.) of proposed freshwater wetlands, directly north of the Sunrise Highway North Service Road. These wetlands will include native emergent and submergent herbaceous plantings between elevation 9 feet and elevation 15 feet, as well as upland tree and shrub plantings above elevation 15 feet. The permanent pool will maintain a water depth of 4 feet.
2. Excavation of 11,300 cubic yards of materials, to a maximum cut depth of 12 feet. The material will be removed from the site and disposed at an authorized facility. Re-grading within 1,100 square feet of existing wetlands will be required to establish the vegetated drainage swale; this grading will require no net cut/fill.
3. Wetland component structures, including an asphalt maintenance driveway, a 350-square-foot stormwater pre-treatment device, a concrete/paver maintenance driveway, a 4-foot earthen berm, a concrete riser structure and 30-inch concrete pipe, a 550-square-foot rip-rap scour apron, and a 1,500-square-foot rip-rap lined emergency spillway adjacent to the wetlands.

The joint permit application for this component of the project was submitted to NYSDEC/USACE on March 15, 2019, and is included in **Appendix G**, which contains draft permits and permit correspondence.

Elda Lake

Elda Lake improvements would enhance flood control capabilities for storm events. Improvements would include:

1. Installation of a new 3' X 4' sluice gate. The Town of Babylon Department of Public Works would be

responsible for pre-emptive water level control in anticipation of significant precipitation or thawing events, as well as general and long-term maintenance. An operation and maintenance plan for the water control gate is included in **Appendix H.**

2. Installation of new catch basins and leaching structures as supplements to the existing drainage system.
3. Replacement of the existing arch culverts will be replaced with two 10' X 5' box culverts with geotextile bedding.
4. Use of cofferdams during installation of the culverts to eliminate and/or minimize concerns regarding sedimentation.
5. Installation of an NYSDEC-approved fish passage. The daylighted portion of the fish passage would be pile-supported with a maximum 1:6 slope. The portion under the roadway would comprise a 2-foot pipe.

See site plan details in the 30 Percent Design drawings included in **Appendix G**, which contains draft permits and permit correspondence.

Southards Pond

The proposed improvements at Southards Pond will open the pond and large reaches of the eastern and western spurs of the Carlls River to migratory fish as spawning habitat, as well as provide hydraulic improvements to reduce upstream flooding elevations and downstream peak flows during storm events. Proposed improvements include:

1. Replacement and up-sizing of the existing two (2) 36" x 60" CMP (corrugated metal pipe) overflow culverts with one 10' x 3' precast box culvert
2. Installation of an additional 2' x 3' precast box culvert and 2' x 3' sluice gate. The Village of Babylon Highway Department will use the new 2' x 3' control sluice gate to pre-emptively lower the pond by 2.0 ft. in advance of storms. For the proposed sluice gate, modelling indicates that the lake level can be dropped approximately 1.0 ft every 15 hours during low flow periods in advance of storms. The Village's Highway Department will also be responsible for other general and long-term maintenance. An operation and maintenance plan for the water control gate is included in **Appendix H.**
3. Construction of naturalized fish and wildlife passage and associated 25 cubic yards of rip-rap at 18" deep (450 sq. ft.), and 5) creation of 200 sq. ft. of wetland mitigation area.

Please see the Joint New York State Department of Environmental Conservation (NYSDEC) and United States Army Corps. Of Engineers (USACE) Permit Application in **Appendix G** for further description of these features.

Argyle Lake

Improvements at Argyle Lake would allow for flow control for storm events. The lake currently includes seven outflow features, including arch spillways, culverts, and a fish ladder. Improvements would be undertaken to the westernmost spillway and include:

1. Installation of a new control gauge and 4-foot x 4-foot sluice gate that would be operated by the Village of Babylon Highway Department prior to major anticipated storms to provide pre-emptive lowering. The Village's Highway Department would also be responsible for other general and long-term maintenance. An operation and maintenance plan for the water control gate is included in **Appendix H.**
2. Replacement of the existing 55-inch x 36-inch arch spillway with a 10-foot x 3-foot relief box culvert with geotextile bedding.
3. Replacement of the existing concrete sidewalk

Please see the Joint New York State Department of Environmental Conservation (NYSDEC) and United States Army Corps of Engineers (USACE) Permit Application, and permit, in **Appendix G** for further description of these features.

Locust Avenue

Proposed improvements a Locust Avenue would provide hydraulic improvements by increasing stormwater conveyance capacity and reducing the potential for flooding. Improvements will include:

1. Upsizing of an existing culvert at Locust Avenue by replacement of the existing 15-foot-wide, 3-sided culvert (62 feet long) with a new 23-foot-wide-wide, 3-sided culvert (also 62 feet long) with an open-span road bridge supported by concrete sheet piles.
2. Installation of 12-inch-thick prestressed concrete piles to support the new culvert.
3. Installation of substrate within the new culvert to provide a more natural habitat for fish and wildlife.
4. Removal and replacement of existing gabions downstream of Locust Avenue, so as to align with the new span opening.

No stream excavation is proposed. All excavation will occur within the existing limits of the roadway. The joint permit application for this component of the project was submitted to NYSDEC/USACE on March 15, 2019, and is included in **Appendix G**.

Statement of Purpose and Need for the Proposal [40 CFR 1508.9(b)]:

The project will reduce future flooding and damages similar to those that resulted from Superstorm Sandy and Hurricane Irene. The proposed improvements selected from the 2016 RBA Carlls River Tributary/Watershed Study will reduce flooding from storms affecting communities identified in the relevant Carlls River Tributary Watershed Project(s) from the 2014 New York Rising Community Reconstruction (NYRCR) Plan for the Village of Babylon/West Babylon. Additional objectives of the project are water quality protection and flood mitigation for the overall Carlls River Tributary Watershed.

The Village of Babylon was particularly hard-hit by Superstorm Sandy. Structures located along the Great South Bay and along canals experienced the worst damage. Overall, 2,124 homes in the Village of Babylon were substantially damaged, and more than 50 percent were heavily damaged. This project will involve a range of ecological and infrastructure recovery activities that will address the community's resiliency to future storms and prevent the types of damages that resulted from Superstorm Sandy.

This multi-phase infrastructure project will significantly reduce flood risk to residential areas, commercial assets, major and secondary transportation corridors and protect park and open space assets. Enhanced stormwater treatment and flood protection is expected to reduce the vulnerability of residential areas within extreme and high flood-risk areas, as follows:

- The Sunrise Highway stormwater wetland is designed to treat stormwater runoff from 19.6 acres of impervious surfaces associated with Sunrise Highway prior to discharging in to the wester spur of Carlls River. Currently, this runoff discharges directly to surface waters. Environmental benefits expected to result from the proposed project include improvements to water quality by reducing discharge of sediments, road salt, and pollutants to the western spur of Carlls River, increasing habitat quality, and increasing habitat availability for wildlife.

- Southard's Pond has a surface impoundment of approximately 27 acres and a contributory drainage area of approximately 13,900 acres. Runoff that cannot be conveyed through the existing spillway or existing overflow culverts flows over the Southard's Pond embankment, which is approximately 3' higher than the existing spillway. This embankment currently serves as a pedestrian path through the park, and flooding of this embankment restricts pedestrian access during storm events. The proposed sluice gate with preemptive lowering in advance of storms will allow the Town to lower maximum upstream ponding elevations at Southard's Pond. Additionally, the larger relief culvert will enhance outlet performance during storm events. The proposed naturalized fish and wildlife passage will open the approximately 27-acre impoundment at Southard's Pond, as well as approximately 3.0 additional miles of upper Carlls River watershed, to spawning for migratory diadromous fish.
- Improvements at Locust Avenue will provide hydraulic improvements by increasing stormwater conveyance capacity and reducing potential for flooding. These hydraulic improvements extend upstream to the north of the Park Avenue culvert, as the capacity of the Locust Avenue culvert limits flow through the Park Avenue culvert during high volume events. The proposed open span will improve stream habitat and function (in terms of fish and wildlife passage) by making flow rates within the improved crossing more consistent with upstream and downstream flows, providing natural substrate within the new open span, and minimizing potential culvert impacts to in-stream sediment transport. The proposed construction is located within the Village of Babylon right-of-way for Locust Avenue.
- Design improvements at Elda Lake and Argyle Lake would address similar stormwater management needs.

The project also will reduce vulnerability of secondary roads in the extreme risk areas, as well as Argyle Lake Park.

The resulting preservation and enhancement of the watershed will reduce risk throughout much of the community. Major beneficiaries of the project include the population of target areas within the Village of Babylon.

Existing Conditions and Trends [24 CFR 58.40(a)]:
The Carlls River is the fourth largest river system on Long Island. The river begins in Dix Hills, Wheatley Heights, Deer Park and Wyandanch, and ends down river in North Babylon and the Village of Babylon with the river delta, including Fosters Creek, leading to Great South Bay. The Carlls River watershed itself encompasses more than 15 square miles. Specific project sites where improvements would occur under the proposed project lie within the boundaries of the Town of Babylon (see **Figures 2a through 2c**).

Funding Information

Estimated Total HUD Funded Amount: $6,801,908.00
Estimated Total Project Cost (HUD and non-HUD funds) [24 CFR 58.32(d)]**:** $6,801,908.00

Compliance with 24 CFR 58.5, and 58.6 Laws and Authorities

Record below the compliance or conformance determinations for each statute, executive order, or regulation. Provide credible, traceable, and supportive source documentation for each authority. Where applicable, complete the necessary reviews or consultations and obtain or note applicable permits of approvals. Clearly note citations, dates/names/titles of contacts, and page references. Attach additional documentation as appropriate.

Compliance Factors: Statutes, Executive Orders, and Regulations listed at 24 CFR §58.5 and §58.6	**Are formal compliance steps or mitigation required?**	**Compliance determinations**
STATUTES, EXECUTIVE ORDERS, AND REGULATIONS LISTED AT 24 CFR 50.4 and 58.6		
Airport Hazards 24 CFR Part 51 Subpart D	Yes ☐ No ☒	Not applicable. Based on guidance provided by HUD in Fact Sheet #D1, the National Plan of Integrated Airport Systems was reviewed for civilian, commercial service airports within the vicinity of the project site. No known civil airports are located within 2,500 feet and no known military airports are located within 15,000 feet of the project site (See **Figure 11**).
Coastal Barrier Resources Coastal Barrier Resources Act, as amended by the Coastal Barrier Improvement Act of 1990 [16 USC 3501]	Yes ☐ No ☒	Not applicable. According to the Coastal Barrier Resource System maps, the proposed project is not located in a Coastal Barrier Resource System (see **Figure 5**). Therefore, the proposed project would have no impact on any Coastal Barrier Resources.
Flood Insurance Flood Disaster Protection Act of 1973 and National Flood Insurance Reform Act of 1994 [42 USC 4001-4128 and 42 USC 5154a]	Yes ☐ No ☒	Not applicable. The proposed project is an infrastructure project with no improvements to buildings (i.e., real property) or mobile homes either located or to be located in areas identified by FEMA as having special flood hazards in participating communities. Therefore, flood insurance is not required.
STATUTES, EXECUTIVE ORDERS, AND REGULATIONS LISTED AT 24 CFR 50.4 & 58.5		
Clean Air Clean Air Act, as amended, particularly section 176(c) & (d); 40 CFR Parts 6, 51, 93	Yes ☐ No ☒	The proposed project would be located in Nassau County, which is in moderate non-attainment for the federal 8-hour ozone standard. No emissions would result from the project once complete. Temporary emissions would result from the use of motorized equipment during installation of flood control features. However, such emissions would not be substantial and would clearly not exceed *de minimis* emissions levels for general conformity purposes.

Coastal Zone Management Coastal Zone Management Act, sections 307(c) & (d)	Yes ☒ No ☐	A portion of the proposed improvements, the Argyle Lake Park Control Gate and Culvert, is located within the boundaries of the New York State Coastal Zone (see **Figure 4**). A New York State Coastal Consistency Assessment form and supporting documentation was submitted the New York Department of State, Division of Coastal Resources on October 29, 2018, and a response was received on October 31st indicating agency concurrence with the assessment that the proposed project would be consistent with the State General Concurrence Criteria (See **Appendix A**).
Contamination and Toxic Substances 24 CFR Part 50.3(i) & 58.5(i)(2)	Yes ☐ No ☒	The proposed improvements are not listed near any U.S. Environmental Protection Agency (EPA) Superfund National Priorities or Superfund Alternative Approach (SSA) site, nor are they located near any toxic or solid waste landfill site. However, two of the locations for proposed improvements are located within 3,000 feet of NYSDEC hazardous remediation sites (see **Figures 6a through 6e**). The proposed improvements located at Locust Avenue are within 3,000 feet of the Suffolk County Test Well # 43821 (NYSDEC No. 152068), a groundwater observation well which is contaminated by unknown sources. The proposed improvements located at Argyle Lake are within 3,000 feet of the Eugene's Dry Cleaners site (NYSDEC No. 152157), an inactive hazardous waste disposal site. Because of the distance of these sites from the project area and the nature of project activities proposed, there would be no impacts from these sites on the proposed improvements. For the proposed improvements located at Sunrise Highway, NYSDOT requested a soil and groundwater investigation be conducted to characterize the material that is expected to remain on the site and/or be reused in other parts of the site. None of the soil samples analytical results exceeded the NYSDEC Part 375 Restricted Residential Use Soil Cleanup Objectives (see **Appendix F**). As such, there would be no adverse impacts from the proposed improvements.
Endangered Species	Yes ☒ No ☐	According to the USFWS IPaC Trust Resource Report and Official Species List of threatened and

Endangered Species Act of 1973, particularly section 7; 50 CFR Part 402		endangered species, there are six endangered or threatened species that may potentially occur with the project area (northern long-eared bat, piping plover, red knot, roseate tern, sandplain gerardia, and seabeach amaranth) and there are 26 migratory birds of concern that could potentially be affected by the Proposed Action. There is no critical habitat designated within the vicinity of the project areas. Suitable habitat for piping plover, red knot, roseate tern, sandplain gerardia, and seabeach amaranth is not present within the immediate vicinity of any of the Proposed Action. Piping plover, red knot, and roseate tern are known to occur in the region during the spring and summer, utilizing coastal beaches and waters, but the immediate vicinity of the five component project areas do not contain suitable foraging or breeding habitat. The project areas do not contain coastal grassland habitat for sandplain gerardia or upper beach zone habitat for seabeach amaranth. Therefore, the Proposed Action would have **no effect** on piping plover, red knot, roseate tern, sandplain gerardia, or seabeach amaranth. The Proposed Action would take place within the range of potential occurrence of northern long-eared bat; however, the Proposed Action is not located within the vicinity of known or assumed NLEB hibernacula or maternity roosts. Due to a seasonal restriction by NYSDEC, for trout, that requires no work occur between October 1 and March 31, tree removal during the active bat season cannot be avoided. The Town of Babylon would coordinate with USFWS for onsite monitoring during project activities to ensure that northern long-eared bats are not impacted during construction. Over three hundred acres of adjacent suitable, undisturbed forested habitat along the corridor of Carlls River and within Belmont Lake State Park would remain available to northern long-eared bat and migratory birds. The approximately 1.3 acres of tree removal may affect but is **not likely to adversely affect** northern long-eared bat or migratory birds, including bald eagle. Based on information provided by USFWS and New York State Natural Heritage Program (NYSNHP) there are no known bald eagle nests within the vicinity

		of the project areas; therefore, the Proposed Action should have **no effect** on breeding bald eagle. On December 6, 2018, consultation was initiated with the US Fish and Wildlife Service requesting concurrence with (a) a finding of **no effect** on piping plover, red knot, roseate tern, sandplain gerardia, or seabeach amaranth, (b) a finding of may affect, but **not likely to adversely affect** northern long-eared bat, and (c) a finding of not likely to adversely affect migratory birds or bald eagle. The consultation included a northern long-eared bat 4(d) rule streamlined consultation form pursuant to USFWS's January 5, 2016, Intra-Service Programmatic Biological Opinion on the final 4(d) rule for the northern long-eared bat was included in the December 6, 2018 consultation to USFWS. Consultation follow-up with USFWS was attempted on February 4, 2019, March 9, 2019 and July 16, 2019. Pursuant to USFWS guidance, given that the 4(d) rule streamlined consultation form was used for NLEB, and given that all other effect conclusions were "no effect" or "not likely to adversely affect," no further consultation is required (see **Appendix B**).
Explosive and Flammable Hazards 24 CFR Part 51 Subpart C	Yes ☐ No ☒	Not applicable. This criterion is applicable to HUD-assisted projects that involve new residential construction, conversion of non-residential buildings to residential use, rehabilitation of residential properties that increase the number of units, or restoration of abandoned properties to habitable condition. The proposed project does not include these activities.
Farmlands Protection Farmland Protection Policy Act of 1981, particularly sections 1504(b) and 1541; 7 CFR Part 658	Yes ☐ No ☒	Not applicable. The project location is not located within an Agricultural District. It would not involve the conversion of farmland to non-agricultural use. Therefore, the proposed project would not violate the Farmland Protection Policy Act.
Floodplain Management	Yes ☒ No ☐	According to the flood map of the study area and FIRM panels 36103C0854H and 36103C0855H, four of the five project locations lie within the 100-year floodplain (see **Figures**

Executive Order 11988, particularly section 2(a); 24 CFR Part 55		**3a through 3c**). A formal floodplain review process is required for compliance with Executive Order 11988 Floodplain Management. This 8-step decision making process is detailed in **Appendix C**.
Historic Preservation National Historic Preservation Act of 1966, particularly sections 106 and 110; 36 CFR Part 800; Tribal notification for new ground disturbance.	Yes ☐ No ☒	Initial consultation with the New York State Office of Parks, Recreation and Historic Preservation was initiated by the Town of Babylon, with a request for an updated OPRHP sign off letter in accordance with the New York State Historic Preservation Act of 1980 (section 14.09 of the New York Parks, Recreation and Historic Preservation Law). On May 29, 2018, New York State Office of Parks, Recreation and Historic Preservation responded that the project will continue to have No Impact upon cultural resources in or eligible for inclusion in the State and National Register of Historic Places (see **Appendix D**).
Noise Abatement and Control Noise Control Act of 1972, as amended by the Quiet Communities Act of 1978; 24 CFR Part 51 Subpart B	Yes ☐ No ☒	The policies of 24 CFR 51.101(a)(3) do not apply to any action or emergency assistance under disaster assistance provisions or appropriations which are provided to save lives and protect public health and safety. The proposed activity involves installation and replacement of flood control structures and would not result in a new facility that would generate noise in the project area, nor would it introduce any new or rehabilitate any existing noise sensitive uses. The proposed project would cause temporary increases in noise levels during construction. Noise over ambient levels would occur from the intermittent use of powered mechanical equipment between the hours of 7:30am and 4:00pm, Monday through Saturday. Impacts from noise would be mitigated through compliance with local noise ordinances using construction best practices. As a result, the project is not anticipated to result in a significant contribution to existing noise levels. Therefore, no significant noise impacts would occur as a result of the proposed project.
Sole Source Aquifers Safe Drinking Water Act of 1974, as amended, particularly section 1424(e); 40 CFR Part 149	Yes ☒ No ☐	The proposed project is located on the Nassau-Suffolk Sole Source Aquifer (SSA) system (see **Figure 7**). An Initial Screen/Preliminary Review was submitted to the EPA on October 24th, 2018 per the Memorandum of Understanding (MOU) between EPA and HUD dated August 24, 1990 requesting an Initial Screen/Preliminary Review.

		Concurrence as to no significant adverse impact was received on November 16, 2018 (See **Appendix E**).
Wetlands Protection Executive Order 11990, particularly sections 2 and 5	Yes ☒ No ☐	The locations of each project in relation to NWI and NYSDEC wetlands, as presented in GIS data, are illustrated in **Figures 12a through 12c**. To better determine each project's impact on wetlands, further analysis was undertaken. The Sunrise Highway project location includes 0.26 acres of NYSDEC Class 1 wetlands Construction of a stormwater wetland basin, to capture overland flow, at Sunrise Highway would occur entirely within uplands, although some features would be located in proximity to wetlands. A pre-treatment device is proposed to remove pollutants from stormwater and improve existing conditions from stormwater entering the wetlands. Plantings will be established as approved by NYSDEC. Approximately 10,600 square feet of new wetlands would be constructed at this location. Installation of a control gate, primary spillway culvert and fish ladder at Elda Lake location will affect 0.04 acres of NYSDEC Class 1 wetlands and 0.19 acres of NWI wetlands. No permanent loss of wetlands or wetland function is expected at this location. Approximately 650 square feet of new wetlands would be constructed at this location. The Southards Pond project location includes 0.18 acres of NYSDEC Class 1 wetlands and 0.18 acres of NWI wetlands. The natural fish passage channel at Southards Pond location will result in the permanent loss of up to 450 sq. ft. of naturally vegetated upland and wetland areas on the north and south embankments of the pedestrian walkway at Southard's Pond. Accordingly, the proposed project includes establishment and re-planting of approximately 200 SF of mitigation wetland plantings (where no wetland vegetation currently exists) and restoration plantings in existing wetland areas that will be disturbed. Replacement of a control gate and culvert and at Argyle Lake location will affect 0.06 acres of NYSDEC Class 1 wetlands and 0.02 acres of NWI

		wetlands. No permanent loss of wetlands or wetlands function is expected at this location. The Locust Avenue location also includes 0.01 acres of NYSDEC Class 1 wetlands and 0.03 acres of NWI wetlands. Replacement of culverts at Locust Avenue location will not occur within the limits of any wetlands, although work will occur in proximity to wetlands. As mitigation for potential effects, the project would include planting of 500 square feet of vegetation along the stream bank. A formal floodplain review process is required for compliance with Executive Order 11990 Protection of Wetlands. This 8-step decision making process is detailed in **Appendix C**.
Wild and Scenic Rivers Wild and Scenic Rivers Act of 1968, particularly section 7(b) and (c)	Yes ☐ No ☒	The proposed activity is not in proximity of a listed Wild and Scenic River. The Upper Delaware Scenic and Recreational River is the only river listed in the state of New York under the National Wild and Scenic Rivers Act. River stretches located in Suffolk County and listed under the New York State Wild, Scenic and Recreational Rivers Act include the Connetquot, Carmans and Nissequoque, Rivers, none of which are located in the vicinity of the project area. No additional review is required.
ENVIRONMENTAL JUSTICE		
Environmental Justice Executive Order 12898	Yes ☐ No ☒	None of the project locations for the proposed activity are located in or adjacent to potential environmental justice areas identified by the New York State Department of Environmental Conservation (see **Figure 10**). The proposed activity would not raise environmental justice issues and has no potential for new or continued disproportionately high and adverse human health and environmental effects on minority or low-income populations. No additional review is required.

Environmental Assessment Factors [24 CFR 58.40; Ref. 40 CFR 1508.8 &1508.27] Recorded below is the qualitative and quantitative significance of the effects of the proposal on the character, features and resources of the project area. Each factor has been evaluated and documented, as appropriate and in proportion to its relevance to the proposed action. Verifiable source documentation has been provided and described in support of each determination, as appropriate. Credible, traceable and supportive source documentation for each authority has been provided. Where applicable, the necessary reviews or consultations have been completed and applicable permits of approvals have been obtained or noted. Citations, dates/names/titles of contacts, and page references are clear. Additional documentation is attached, as appropriate. **All conditions, attenuation or mitigation measures have been clearly identified.**

Impact Codes: Use an impact code from the following list to make the determination of impact for each factor.
(1) Minor beneficial impact
(2) No impact anticipated
(3) Minor Adverse Impact – May require mitigation
(4) Significant or potentially significant impact requiring avoidance or modification which may require an Environmental Impact Statement

Environmental Assessment Factor	Impact Code	Impact Evaluation
LAND DEVELOPMENT		
Conformance with Plans / Compatible Land Use and Zoning / Scale and Urban Design	2	No impacts would occur. The project would not change land use, require changes in zoning, or conflict with any land use plans. The project would not introduce new visual elements that would be out of character with the existing landscape. The land use in the vicinity of proposed improvements consists of mixed urban used including parks, residential and public infrastructure. The project would not change or any existing land uses.
Soil Suitability/ Slope/ Erosion/ Drainage/ Storm Water Runoff	2	No impacts would occur. Appropriate soil erosion and sediment control best practices will be implemented during the proposed activities. For example, at Southards Pond, silt fencing shall be installed at the downstream edge of the work limits to prevent erosion of disturbed sediments into Southard's Pond or the Carlls River. A turbidity curtain shall be installed in the Carlls River and Southard's Pond surrounding the project site to prevent downstream movement of turbidity resulting from the proposed construction. A cofferdam shall be installed surrounding upstream work areas and shall serve to minimize potential turbidity impacts in Southard's Pond.
Hazards and Nuisances including Site Safety and Noise	3	Minor adverse impacts would occur during construction, but these impacts would be temporary and would be mitigated. The development of the proposed project would consist of typical construction practices associated with infrastructure upgrades. The proposed project would cause temporary increases in noise levels during construction, during which time noise over ambient levels would occur from the intermittent use of powered mechanical equipment used in the bulk heading between the hours of 7:30am and 4:00pm, Monday through Saturday. Impacts from noise would be mitigated through compliance with local noise ordinances using construction best practices. Measures would be implemented to minimize the exposure of workers and public to hazardous materials present at the project locations.
Energy Consumption	2	No impacts would occur. The proposed project would not require additional connections to existing energy utilities serving the area and would meet New York State energy requirements. During operation, the proposed project would not result in increased energy demand beyond current conditions in the project area, nor would it impact electrical generation or distribution. No impacts would result.

Environmental Assessment Factor	Impact Code	Impact Evaluation
SOCIOECONOMIC		
Employment and Income Patterns	2	No impacts would occur. The actions comprising the proposed project are limited to infrastructure upgrades and have no potential to affect employment opportunities or income patterns.
Demographic Character Changes, Displacement	2	No impacts would occur. The proposed project is not expected to induce any change in the demographic character of the adjoining neighborhoods. In addition, the proposed project would not result in any new residential units and would therefore not change the demographic character of the area.

Environmental Assessment Factor	Impact Code	Impact Evaluation
COMMUNITY FACILITIES AND SERVICES		
Educational and Cultural Facilities	2	No impacts would occur. The proposed project would not result in any new residential units. Therefore, the proposed project would not result in impacts to educational facilities. The proposed project would not adversely impact cultural facilities. On May 29, 2018, SHPO responded that the project will continue to have No Impact upon cultural resources in or eligible for inclusion in the State and National Register of Historic Places (see **Appendix D**).
Commercial Facilities	2	No impacts would occur. The proposed project is limited to infrastructure upgrades and would not introduce any new development that would require retail services or other commercial facilities.
Health Care and Social Services	2	No impacts would occur. The proposed project would not result in any new residential units. Therefore, the proposed project would not result in impacts to educational facilities. The proposed project would not introduce any new development that would affect the current availability of existing health care or social services, nor would it generate additional demand for these community services.
Solid Waste Disposal / Recycling	2	No impacts would occur. The proposed project is limited to infrastructure upgrades and would not result in the generation of solid waste. Moreover, the quantity of solid waste generated during construction activities would not present a measurable increase from existing conditions.
Waste Water / Sanitary Sewers	2	No impacts would occur. The proposed project would not affect the capacity of the existing sanitary sewer system in the Town of Babylon. The proposed improvements would not generate increased demand for wastewater treatment because no wastewater would be generated.
Water Supply	2	No impacts would occur. The proposed project is limited to infrastructure upgrades and would not generate increased demand for water.
Public Safety - Police, Fire and Emergency Medical	1	Beneficial impacts are anticipated. The proposed project would result in infrastructure upgrades within the Town of Babylon. Such improvements would have no effect on demand for police, fire and emergency medical services. Neither construction nor operation of the project would not present an additional burden to local public safety services. Project benefits would include disaster risk reduction, which would reduce vulnerability to storm surge flooding and maintain roadway access for residents to and from emergency facilities and for emergency responders to and from high-risk neighborhoods.

Parks, Open Space and Recreation	1	Beneficial impacts are anticipated. The proposed improvements would improve and/or protect existing parks and open recreation spaces. Three locations occur at public recreational facilities. Improvements these locations would protect them from flooding during storm events.
Transportation and Accessibility	3	Minor, temporary construction-related impacts would occur. Localized minor adverse impacts would occur as a result of temporary construction-related lane closures during installation of the proposed improvements where they occur near roadways. Such impacts would be minimized through the use of a maintenance and protection of traffic (MPT) plan. The project would not result in a measurable increase in traffic during construction. There would be no long-term impact on transportation and accessibility.

Environmental Assessment Factor	Impact Code	Impact Evaluation
NATURAL FEATURES		
Unique Natural Features, Water Resources	1	Minor, temporary construction-related impacts would occur, but the project would result in an overall benefit to natural features and water resources, as indicated in the Project Description and Purpose and Need. The Sunrise Highway project location includes 0.26 acres of NYSDEC Class 1 wetlands Construction of a stormwater wetland basin, to capture overland flow, at Sunrise Highway would occur entirely within uplands, although some features would be located in proximity to wetlands. A pre-treatment device is proposed to remove pollutants from stormwater and improve existing conditions from stormwater entering the wetlands. Plantings will be established as approved by NYSDEC. Approximately 10,600 square feet of new wetlands would be constructed at this location. Installation of a control gate, primary spillway culvert and fish ladder at Elda Lake location will affect 0.04 acres of NYSDEC Class 1 wetlands and 0.19 acres of NWI wetlands. No permanent loss of wetlands or wetland function is expected at this location. Approximately 650 square feet of new wetlands would be constructed at this location. The Southards Pond project location includes 0.18 acres of NYSDEC Class 1 wetlands and 0.18 acres of NWI wetlands. The natural fish passage channel at Southards Pond location will result in the permanent loss of up to 450 sq. ft. of naturally vegetated upland and wetland areas on the north and south embankments of the pedestrian walkway at Southard's Pond. Accordingly, the proposed project includes establishment and re-planting of approximately 200 SF of mitigation wetland plantings (where no wetland vegetation currently exists) and restoration plantings in existing wetland areas that will be disturbed. Replacement of a control gate and culvert and at Argyle Lake location will affect 0.06 acres of NYSDEC Class 1 wetlands and 0.02 acres of NWI wetlands. No permanent loss of wetlands or wetlands function is expected at this location.

		The Locust Avenue location also includes 0.01 acres of NYSDEC Class 1 wetlands and 0.03 acres of NWI wetlands. Replacement of culverts at Locust Avenue location will not occur within the limits of any wetlands, although work will occur in proximity to wetlands. As mitigation for potential effects, the project would include planting of 500 square feet of vegetation along the stream bank. A formal review process is required for compliance with Executive Order 11990 Protection of Wetlands. This 8-step decision making process is detailed in **Appendix C**.
Vegetation, Wildlife	2	No impacts would occur. Red Maple-Blackgum Swamp occurs at Belmont Lake, at or very near the project sites at Elda Lake, Sunrise Highway, and Southards Pond, and within 0.5 mile of the project sites at Locust Avenue and Argyle Lake (see **Figure 8**). This community is composed of a forested swamp of large size with few exotic species, located within a landscape that is surrounded by intense residential development. A narrow stream flows through the wooded sections of the state park. At the point where this stream divides and begins to expand into a large wooded swamp, Sweetbay Magnolia trees, which are state-listed endangered species, are present. Some of the trees are located directly along the edge of a dirt trail. Several bridges and culverts have been placed across the stream that flows through the swamp. The proposed improvements would not affect these resources; therefore, no impacts to these species are anticipated. To avoid impacts to trout at Sunrise Highway, no in-stream work or work that may cause an increase in stream turbidity shall take place between October 1 and March 31. To avoid impacts to diadromous fish, including brown trout, during their spring migration, no in-water work would occur at Elda Lake or Argyle Lake between March 1 to June 30. If work at Elda Lake is completed before the work at Southards Pond, then the seasonal restriction would not apply at Elda Lake (although turbidity curtains would still be required). The Southards Pond fish ladder may not be opened until work at Elda Lake is complete.
Other Factors	2	Designated State scenic byways are present in the project area but are not located near any project sites (see **Figure 9**). There are no other factors applicable to the proposed project.

Additional Studies Performed:

None

Field Inspection (Date and completed by)**:** Various dates by project design teams, 2018 – 2019

List of Sources, Agencies and Persons Consulted [40 CFR 1508.9(b)]**:**

Pre-Application Report. Village of Babylon/West Babylon Carlls River Tributary/Watershed Project. November 13, 2014

Application for Funding. Village of Babylon/West Babylon Carlls River Tributary/Watershed Project. September 2015.

Village of Babylon/West Babylon NYRCR Plan. March 2014. http://stormrecovery.ny.gov/sites/default/files/crp/community/documents/babylon-westbabylon_nyrcr_plan.pdf, accessed on 7/25/2016

NY Rising Community Reconstruction Plan for the Village of Amityville/Copiague, March 2014, https://stormrecovery.ny.gov/sites/default/files/crp/community/documents/amityville-copiague_nyrcr_plan_0.pdf, accessed on 7/25/2016

New York State Cultural Resource Information System, https://cris.parks.ny.gov/Login.aspx?ReturnUrl=%2f.

National Wild and Scenic Rivers System. http://www.rivers.gov/maps/conus.php

New York State Historic Preservation Office (SHPO) and the Division for Historic Preservation (DHP) within the Office of Parks, Recreation and Historic Preservation (OPRHP), New York State Cultural Resource Information System (CRIS), https://cris.parks.ny.gov/.

New York State Department of Environmental Conservation, Environmental Justice Areas, http://www.dec.ny.gov/public/899.html

New York State Department of Environmental Conservation, Environmental Resource Mapper, http://www.dec.ny.gov/imsmaps/ERM/viewer.htm

New York State Department of Environmental Conservation, Environmental Facilities Mapper, http://www.dec.ny.gov/imsmaps/facilities/viewer.htm

New York State Department of Environmental Conservation, Environmental Site Remediation Database, http://www.dec.ny.gov/cfmx/extapps/derexternal/index.cfm?pageid=3

New York State Department of Environmental Conservation, Spill Incidents Database Search, http://www.dec.ny.gov/cfmx/extapps/derexternal/index.cfm?pageid=2

New York State Department of State, Coastal Boundary Map, http://www.dos.ny.gov/opd/atlas/.

Suffolk County, Town of Babylon Land Use Map. http://www.suffolkcountyny.gov/Departments/Planning/Divisions/CartographyandGIS.aspx

Town of Babylon Carlls River Tributary/Watershed Study – Alternatives Analysis and Recommendation Report - October 14, 2016.

United States Department of Agriculture Natural Resources Conservation Services, Web Soil Survey, http://websoilsurvey.sc.egov.usda.gov/App/HomePage.htm.

United States Department of Housing and Urban Development. HUD Fact Sheet #d1 Siting HUD Assisted Projects in Accident Potential Zones https://www.michigan.gov/documents/mshda/mshda_cd_nsp2_air_accident_315724_7.pdf

United States Environmental Protection Agency, The Green Book Nonattainment Areas for Criteria Pollutants. http://www.epa.gov/airquality/greenbook/adden.html

United States Environmental Protection Agency, Sole Source Aquifers, https://www.epa.gov/dwssa

United States Federal Emergency Management Agency. FIRM Panels. https://msc.fema.gov/portal

United States Fish and Wildlife Service, Coastal Barrier Resources, http://www.fws.gov/ecological-services/habitat-conservation/cbra/Maps/index.html

United States Fish and Wildlife Service, National Wetlands Inventory, http://www.fws.gov/wetlands/.

United States Fish and Wildlife Service, Wetland-Codes, https://www.fws.gov/wetlands/data/Wetland-Codes.html

United States Fish and Wildlife Service, IPaC Information for Planning and Conservation, http://ecos.fws.gov/ipac/.

List of Permits Obtained or Required:

Permit assumptions are based on project description and available mapping. Specific permits required will be determined based on field verification and delineations during the permitting stage.

Federal Permits & Approvals	Agency
Section 404 Clean Water Act Section 10 Rivers and Harbors Act	USACE

Federal Consultations:	Agency
Endangered Species Act – Section 7	USFWS
Safe Drinking Water Act	USEPA

New York State and Local Permits & Approvals:	Agency
401 Water Quality Certification Stream Disturbance Dams and Impoundment Structures Tidal Wetlands Freshwater Wetlands Excavation and Fill in Navigable Waters	NYS DEC
Floodplain Development Permit	Local Floodplain Administrator

New York State Consultations:	Agency
Coastal Zone Management	NYS DOS
NYS Historic Preservation Act - Section 14.09	NYS OPRHP

Public Outreach [24 CFR 50.23 & 58.43]**:**
A 15-day public review period for this Environmental Assessment was initiated upon publication of the combined notice of Finding Of No Significant Impact (FONSI) and Notice of Intent to Request Release of Funds (NOI/RROF). During this period, any individual, group or agency could submit written comments on the Project.

Cumulative Impact Analysis [24 CFR 58.32]**:**
Current and routine local infrastructure projects and improvements. Impacts from the proposed project, when combined with other projects occurring in the project vicinity, may contribute to minor short-term cumulative impacts to noise, transportation and public safety. However, the majority of impacts from the proposed project would be short-term in duration and occur only during the construction period associated with the proposed action. As a result, adverse cumulative impacts from the proposed project would be minimal and are not expected to rise to a level of significance in the context of overall development occurring within the vicinity of the project. Because the construction periods associated with these projects would not necessarily occur simultaneously, there would be no contribution to cumulative impacts during construction.

Alternatives [24 CFR 58.40(e); 40 CFR 1508.9]
The proposed action was chosen from the 2016 Carlls River Tributary/Watershed Study Alternatives Analysis and Recommendation Report which had selected projects from the Village of Babylon/West Babylon NYRCR Plan based on funding, permitability, implementability, and benefits. Therefore, no other action alternatives were considered in addition to the proposed action due to the fact that only the specific upgrades, as described in the project description for the proposed action, would meet the purpose and need for action. The No Action alternative is described below.

No Action Alternative [24 CFR 58.40(e)]:
The No Action Alternative is not proposed as it does not adequately achieve the goal of reducing flooding in communities adjacent to the river corridor and providing water quality protection and flood mitigation for the Carlls River Tributary Watershed. Under the No Action alternative, conditions of the environment would remain unchanged, and future storm events would continue to cause physical and economic harm.

Summary of Findings and Conclusions:

The Town of Babylon is proposing implementation of five projects within the Carlls River tributary watershed in Suffolk County, New York. This multicomponent project will allow water levels within this watershed to be adjusted by means of dams, floodgates, and new stormwater retention wetland areas to increase flood protection and reduce the exposure of major assets and residential areas to severe flooding and flood damage.

The project will reduce flooding and damages that resulted from Superstorm Sandy. The proposed improvements will reduce flooding in communities adjacent to the river corridor as identified in the relevant Carlls River Tributary Watershed Project(s) from the Village of Babylon/West Babylon NYRCR Plan. Additional objectives of the project are water quality protection and flood mitigation for the Carlls River Tributary Watershed.

As shown above in the Environmental Assessment Checklist, no significant land development, neighborhood, socioeconomic, natural resources, community facility or other direct, indirect or cumulative impacts would result from the proposed project. As shown in the accompanying Statutory Checklists, the proposed project would comply with all relevant regulations listed in 24 CFR subparts 58.5 and 58.6.

Mitigation Measures and Conditions [40 CFR 1505.2(c)]

Summarize below all mitigation measures adopted by the Responsible Entity to reduce, avoid, or eliminate adverse environmental impacts and to avoid non-compliance or non-conformance with the above-listed authorities and factors. These measures/conditions must be incorporated into project contracts, development agreements, and other relevant documents. The staff responsible for implementing and monitoring mitigation measures should be clearly identified in the mitigation plan.

Law, Authority, or Factor	Mitigation Measure
Permit Requirements	All permit conditions listed above or otherwise required for activities under the proposed project must be adhered to. Clean diesel – implement diesel controls, cleaner fuel, and cleaner construction practices for on-road and off-road equipment used for transportation, soil movement, or other construction activities, including: ○ Strategies and technologies that reduce unnecessary idling, including auxiliary power units, the use of electric equipment, and strict enforcement of idling limits; and ○ Use of clean diesel through add-on control technologies like diesel particulate filters and diesel oxidation catalysts, repowers, or newer, cleaner equipment. To avoid impacts to trout at Sunrise Highway, no in-stream work or work that may cause an increase in stream turbidity shall take place between October 1 and March 31. To avoid impacts to diadromous fish, including brown trout, during their spring migration, no in-water work would occur at Elda Lake or Argyle Lake between March 1 to June 30. If work at Elda Lake is completed before the work at Southards Pond, then the seasonal restriction would not apply at Elda Lake (although turbidity curtains would still be required). The Southards Pond fish ladder may not be opened until work at Elda Lake is complete.

	The Town of Babylon would coordinate with USFWS for onsite monitoring during project activities to ensure that northern long-eared bats are not impacted during construction.

Determination:

☒ **Finding of No Significant Impact** [24 CFR 58.40(g)(1); 40 CFR 1508.27]
The project will not result in a significant impact on the quality of the human environment.

☐ **Finding of Significant Impact** [24 CFR 58.40(g)(2); 40 CFR 1508.27]
The project may significantly affect the quality of the human environment.

Preparer Signature: _____ Date: December 10, 2019

Name/Title/Organization: Jonathan Carey, Planning Manager, Louis Berger

Certifying Officer Signature: _____ Date: December 10, 2019

Name/Title: Lori Shirley, Certifying Officer, GOSR

This original, signed document and related supporting material must be retained on file by the Responsible Entity in an Environmental Review Record (ERR) for the activity/project (ref: 24 CFR Part 58.38) and in accordance with recordkeeping requirements for the HUD program(s).

FIGURES

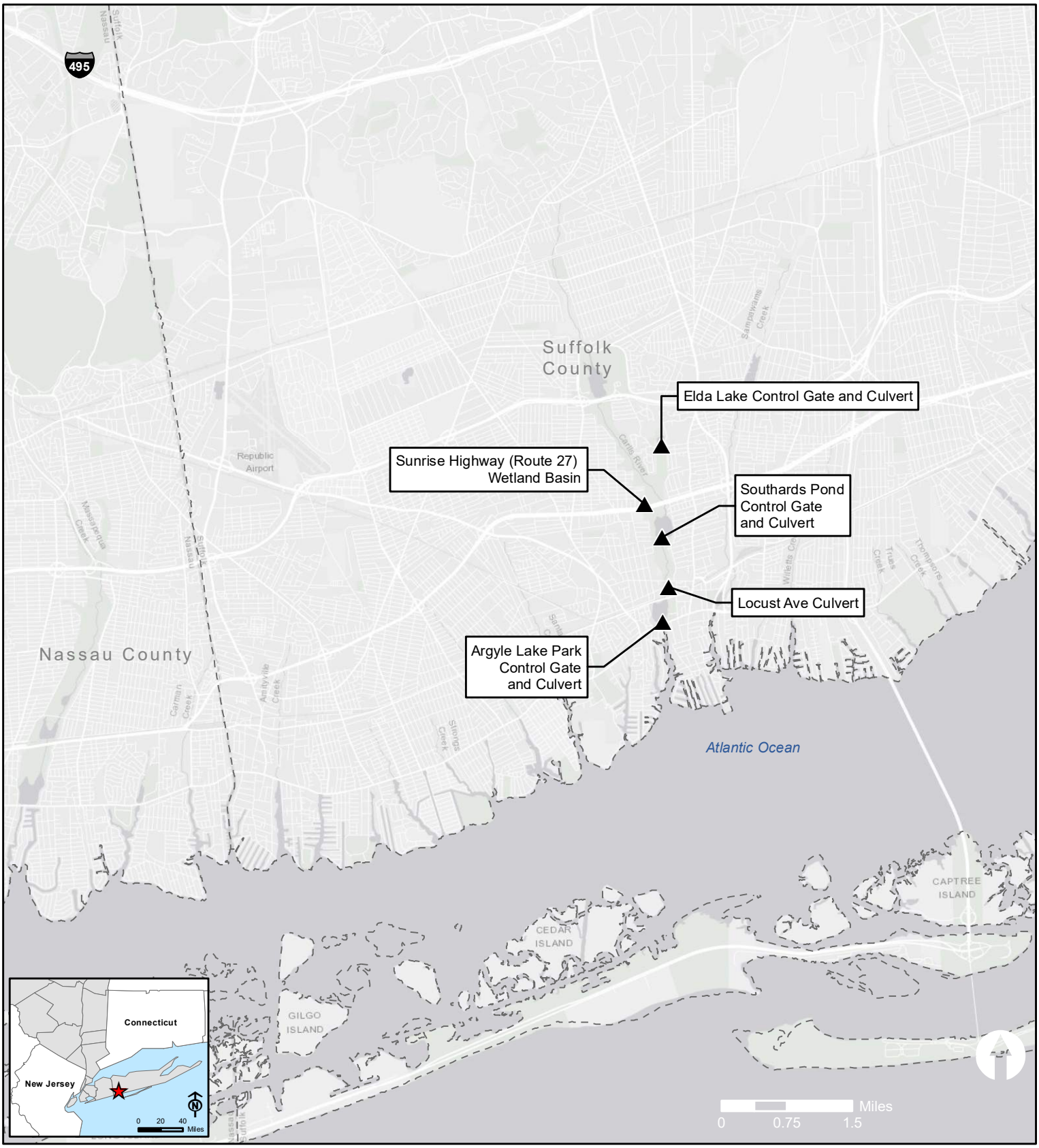

▲ Project Area

- - - County Boundary

Figure 1

Regional Location

Carlls River
Watershed Project

Source: ESRI World Light Gray Canvas Base

Louis Berger

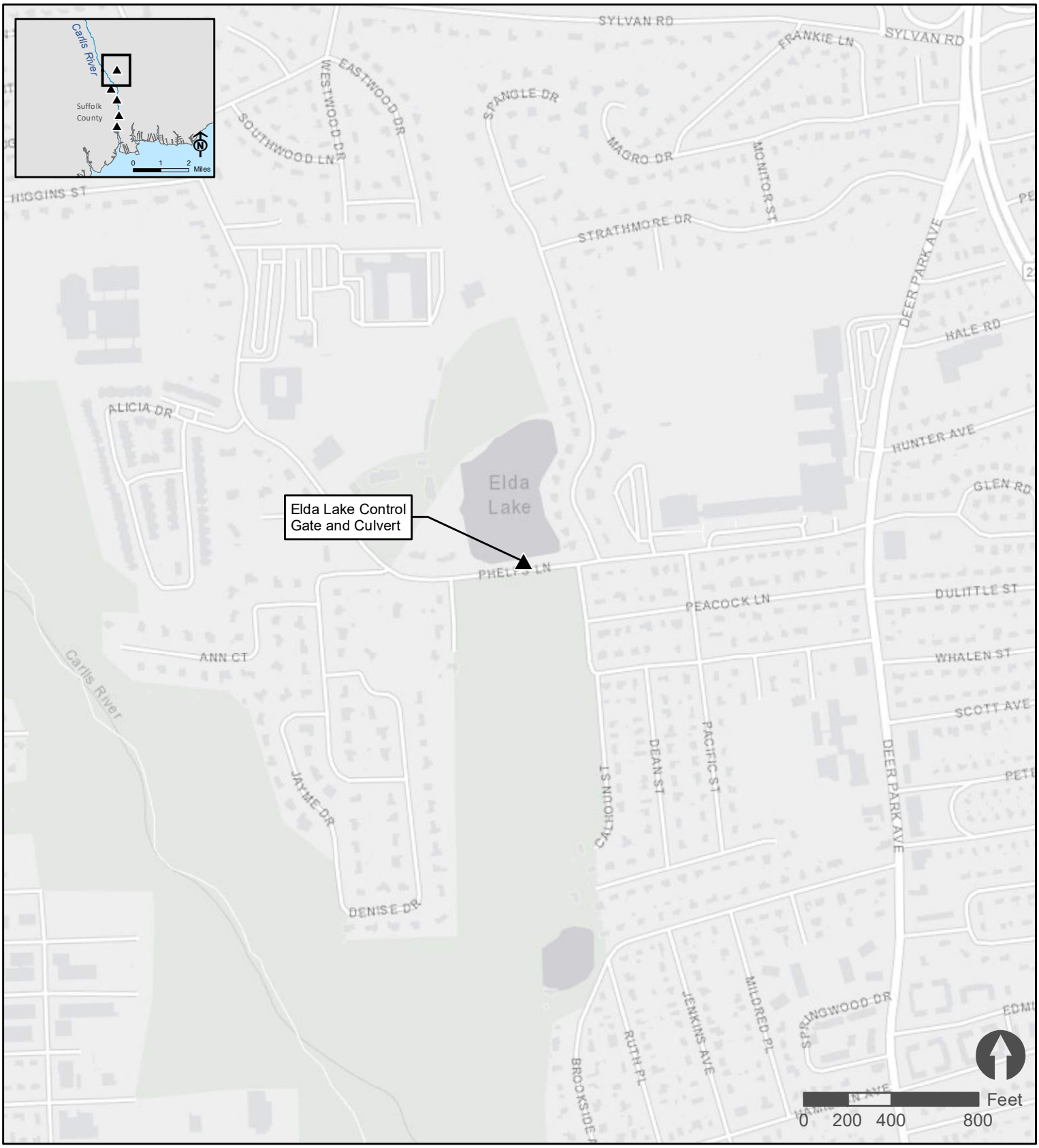

▲ Project Area

Figure 2a

Location of Projects

Carlls River
Watershed Project

Source: ESRI World Light Gray Canvas Base

Louis Berger

▲ Project Area

Figure 2b

Location of Projects

Carlls River
Watershed Project

Source: ESRI World Light Gray Canvas Base

Louis Berger

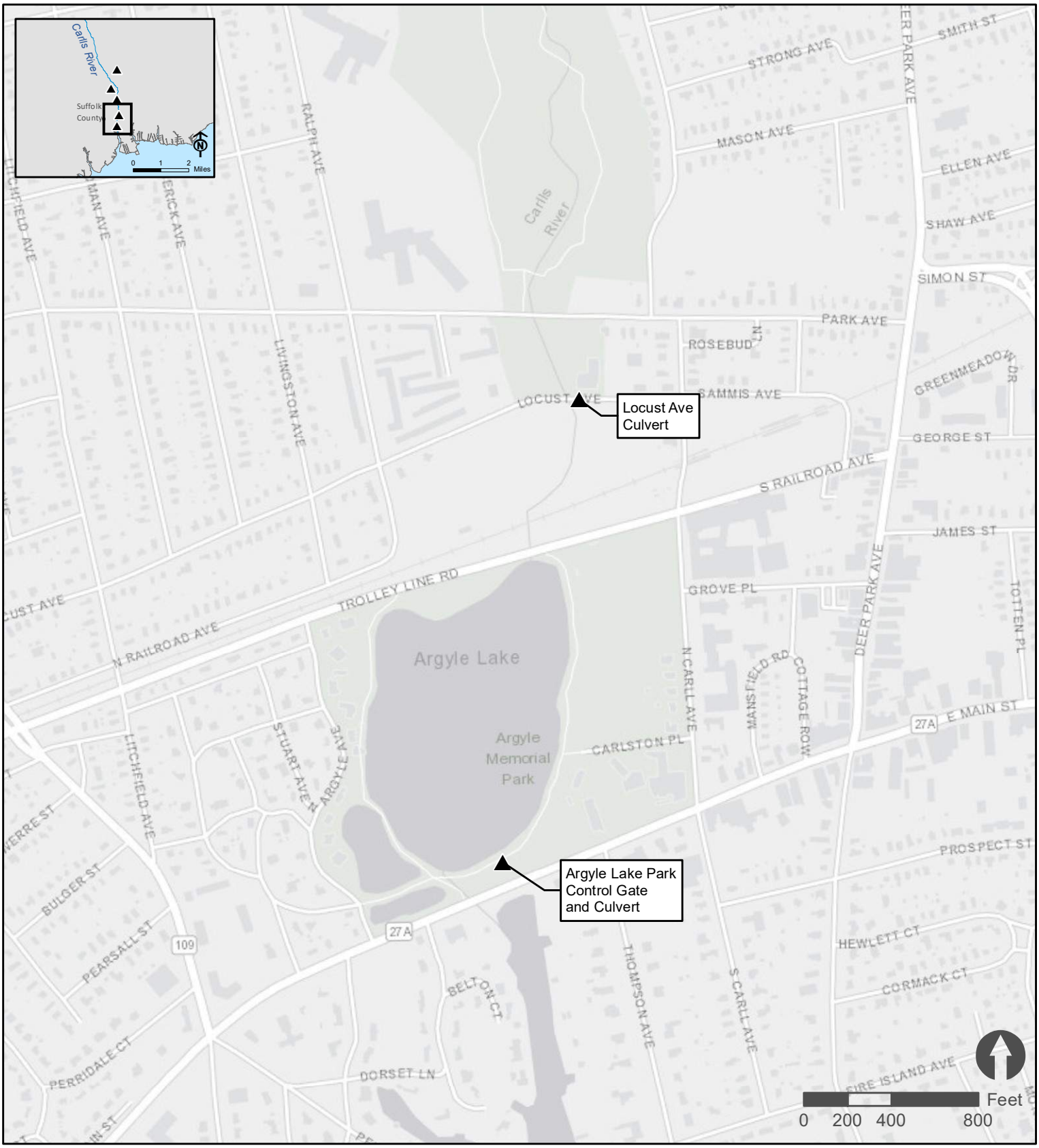

▲ Project Area

Figure 2c

Location of Projects

Carlls River
Watershed Project

Source: ESRI World Light Gray Canvas Base

Louis Berger

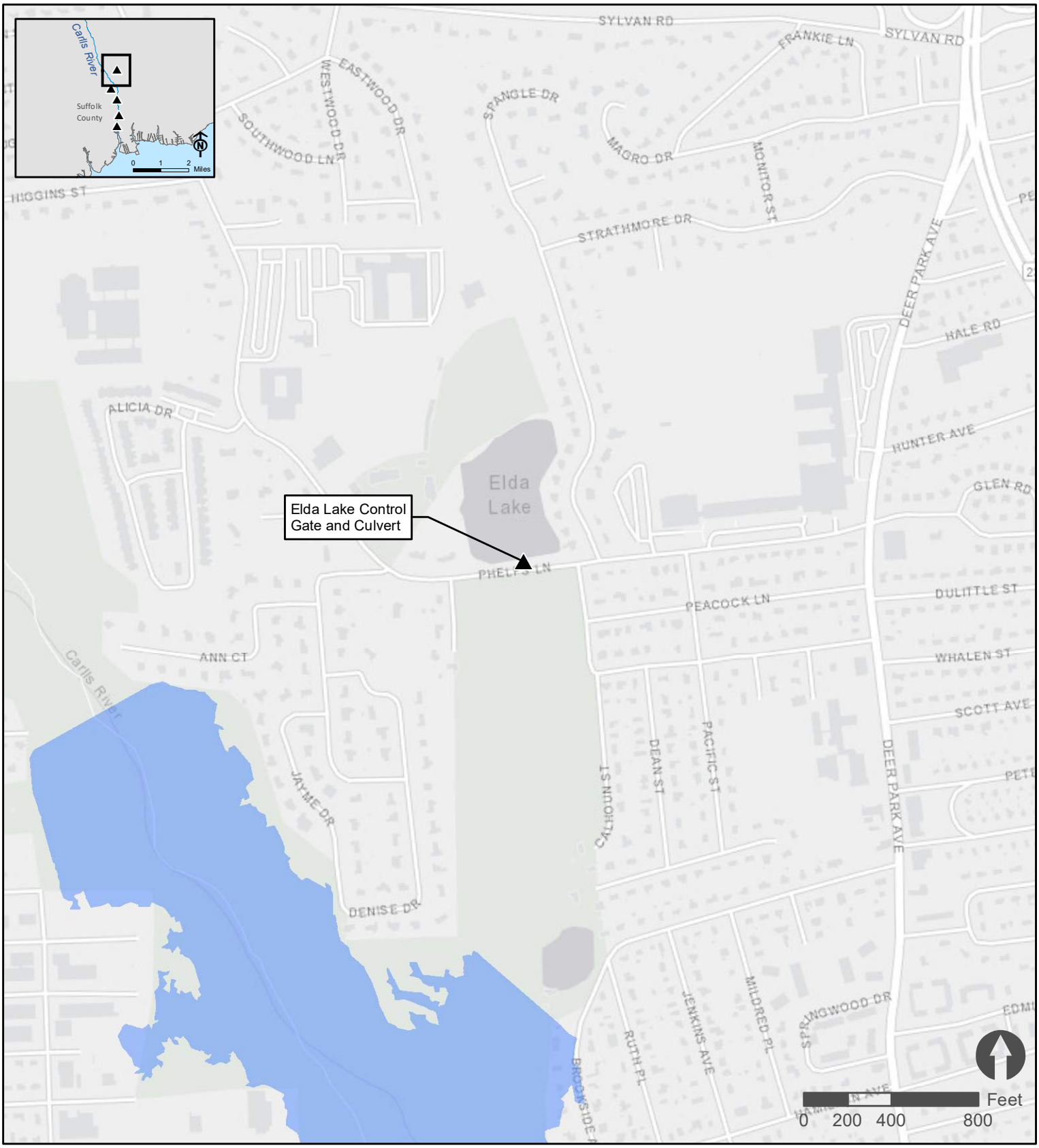

▲ Project Area

1% Annual Chance Flood Hazard (100 Year Floodplain)

Figure 3a

Flood Hazard

Carlls River
Watershed Project

Source: FEMA, ESRI World Light Gray Canvas Base

Louis Berger

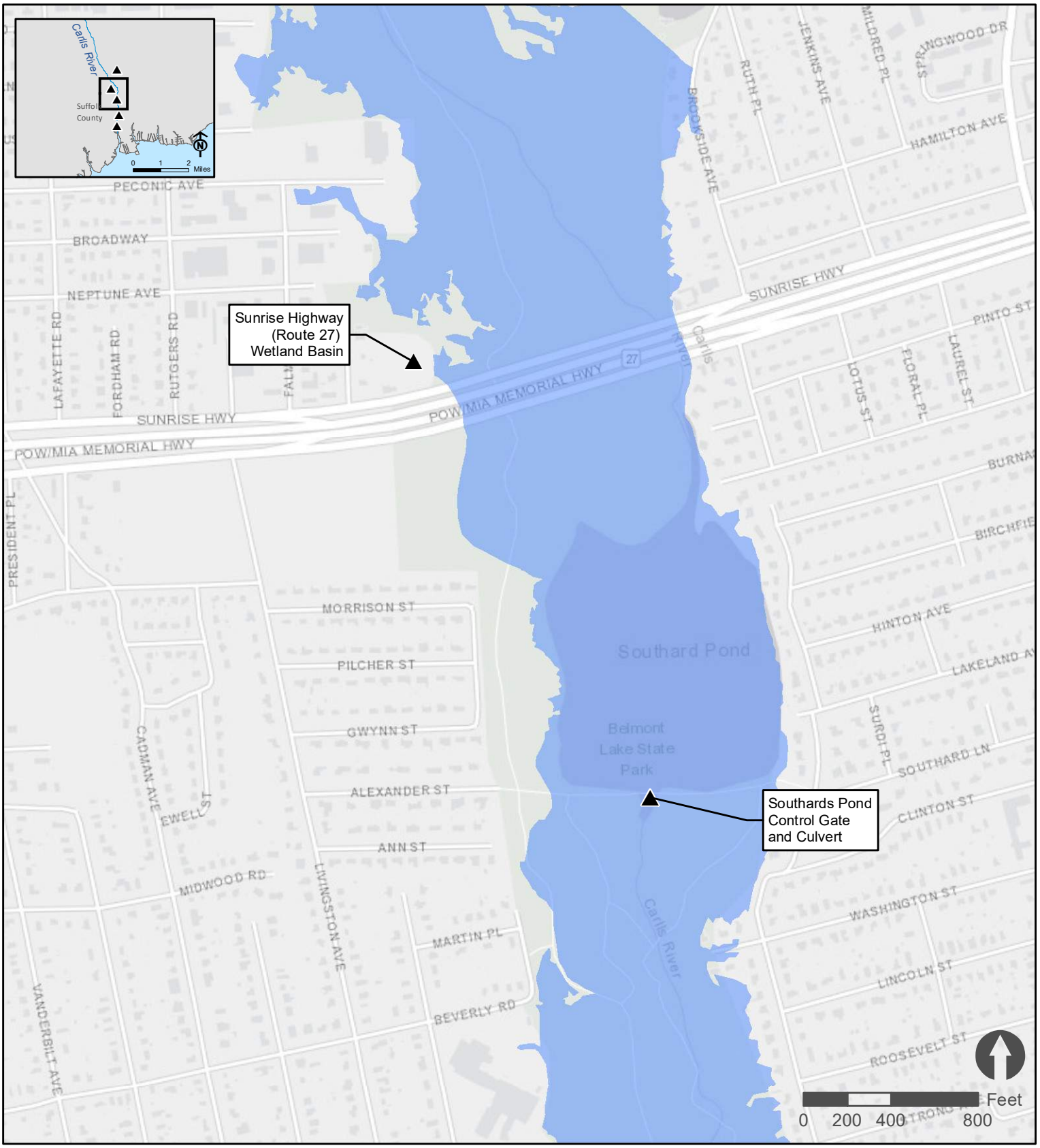

▲ Project Area

1% Annual Chance Flood Hazard (100 Year Floodplain)

Figure 3b

Flood Hazard

Carlls River Watershed Project

Source: FEMA, ESRI World Light Gray Canvas Base

Louis Berger

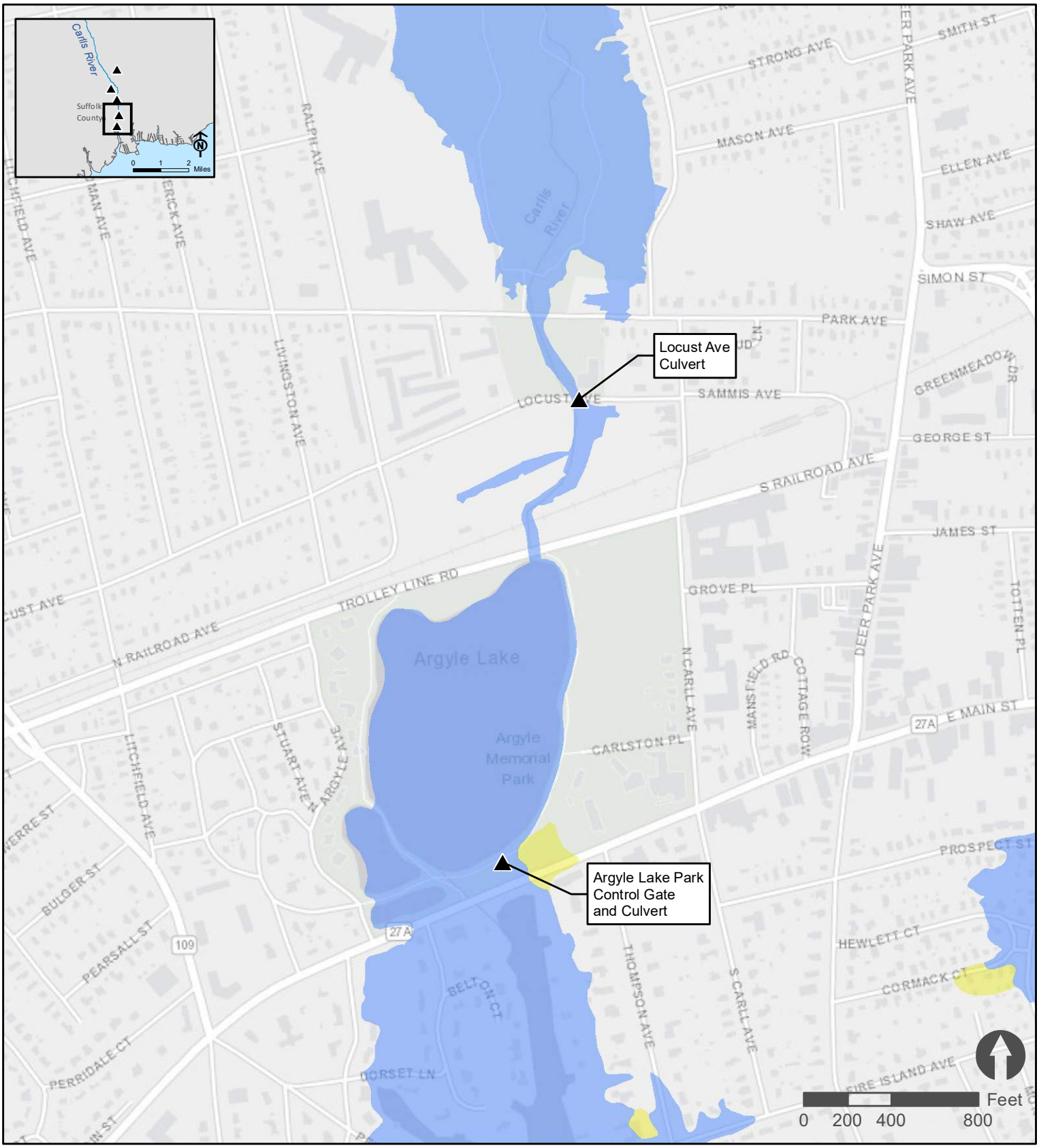

▲ Project Area

1% Annual Chance Flood Hazard (100 Year Floodplain)

0.2% Annual Chance Flood Hazard (500 Year Floodplain)

Figure 3c

Flood Hazard

Carlls River
Watershed Project

Source: FEMA, ESRI World Light Gray Canvas Base

Louis Berger

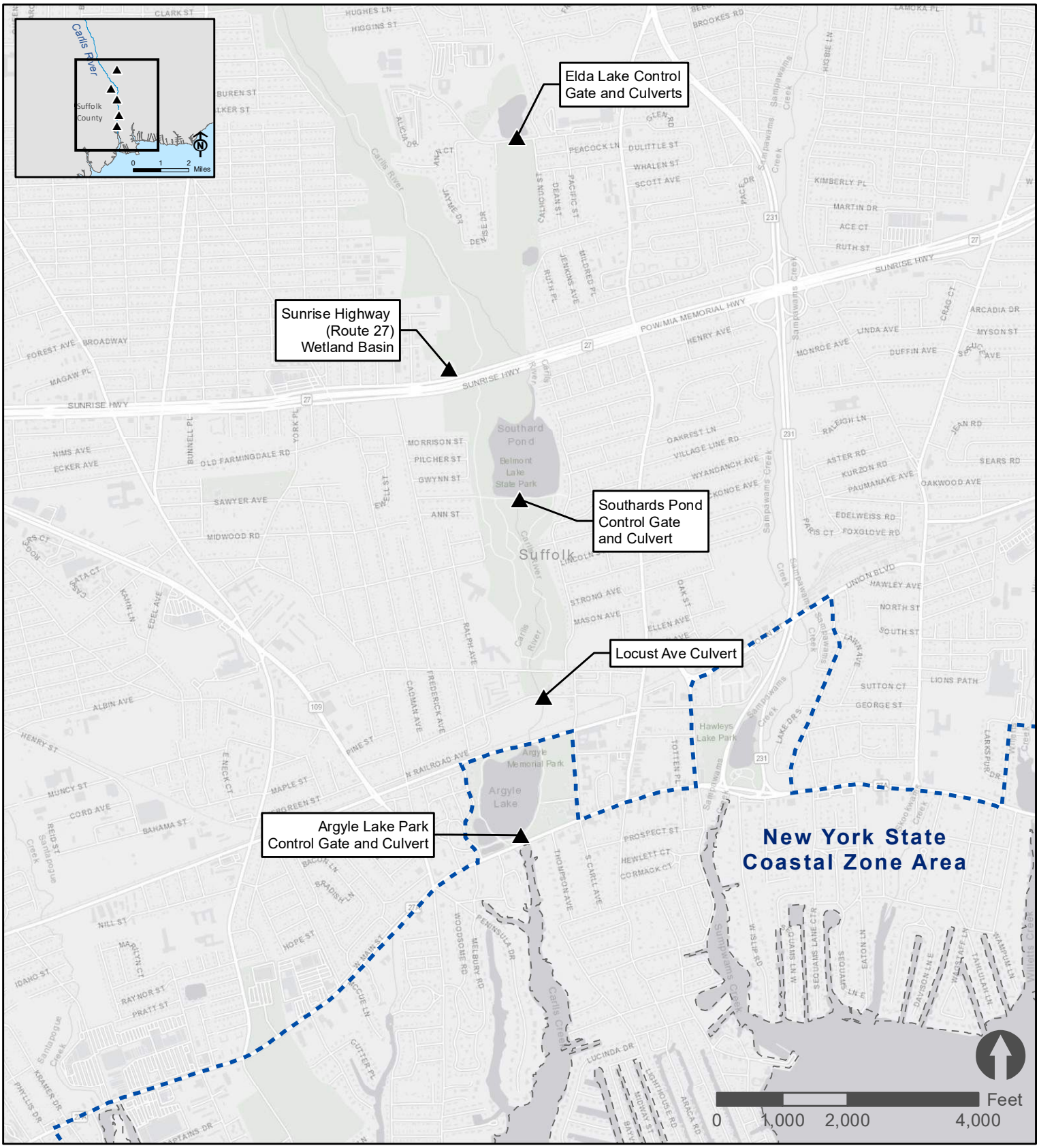

▲ Project Area

Coastal Boundary

Figure 4

New York State Coastal Zone Boundary

Carlls River
Watershed Project

Source: NYS Department of State, ESRI World Light Gray Canvas Base

Louis Berger

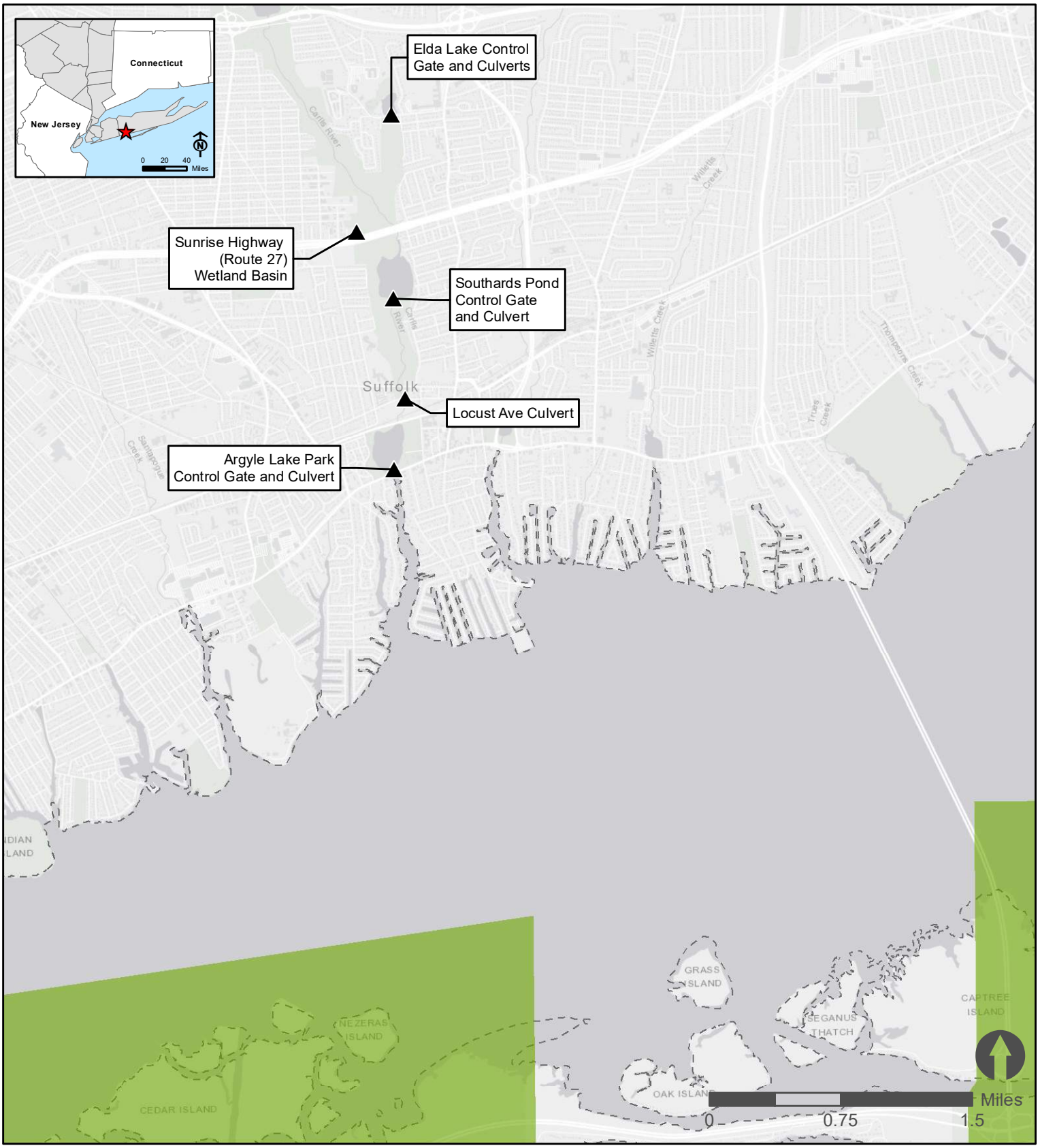

▲ Project Area

Coastal Barrier Resource System

Figure 5

Coastal Barrier Resource System

Carlls River
Watershed Project

Source: U.S. Fish and Wildlife Service, ESRI World Light Gray Canvas Base

Louis Berger

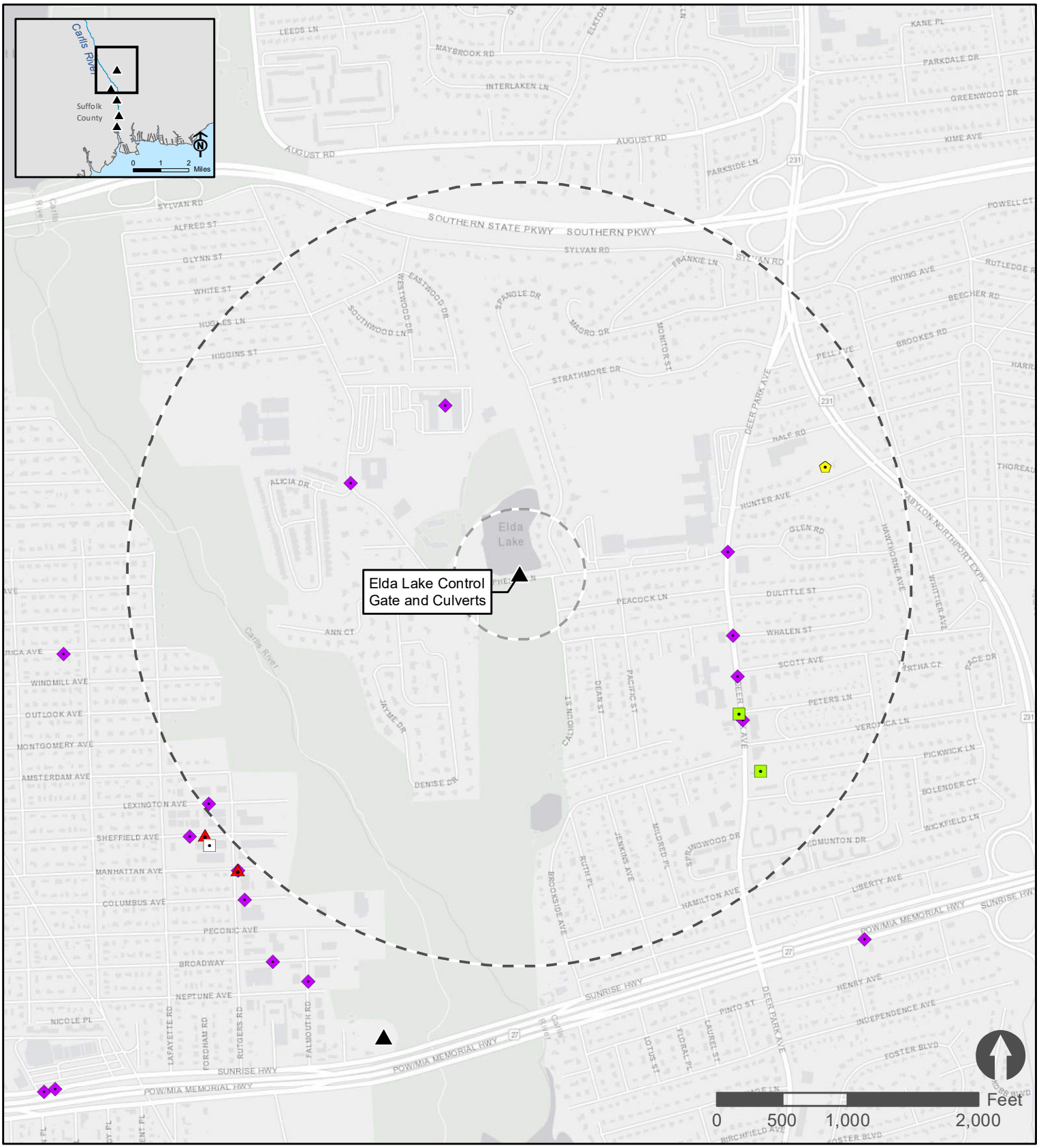

- Project Area
- Project Area 500 foot radius
- Project Area 3,000 foot radius
- Hazardous Waste Generators (Active RCRA)
- Toxic Release Inventory (TRI)
- NYSDEC Remediation Site

NYSDEC Bulk Storage Database

- Petroleum Bulk Storage
- Chemical Bulk Storage

Figure 6a

Remediation Sites

Carlls River Watershed Project

Source: U.S. Environmental Protection Agency, NYS Department of Environmental Conservation, ESRI World Light Gray Canvas Base

Louis Berger

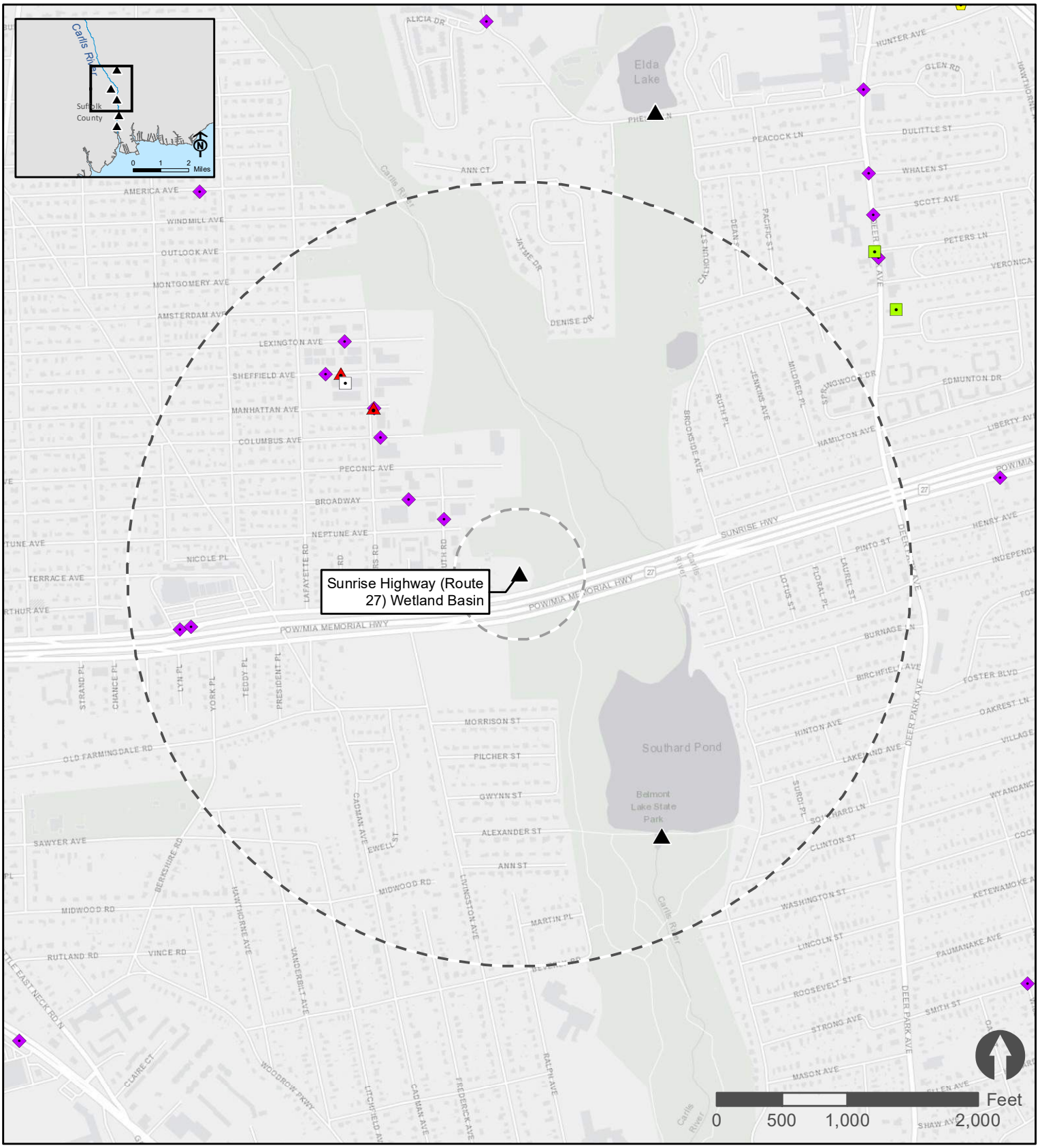

Project Area
Project Area 500 foot radius
Project Area 3,000 foot radius

Hazardous Waste Generators (Active RCRA)
Toxic Release Inventory (TRI)
NYSDEC Remediation Site

NYSDEC Bulk Storage Database

Petroleum Bulk Storage
Chemical Bulk Storage

Figure 6b

Remediation Sites

Carlls River
Watershed Project

Source: U.S. Environmental Protection Agency, NYS Department of Environmental Conservation, ESRI World Light Gray Canvas Base

Louis Berger

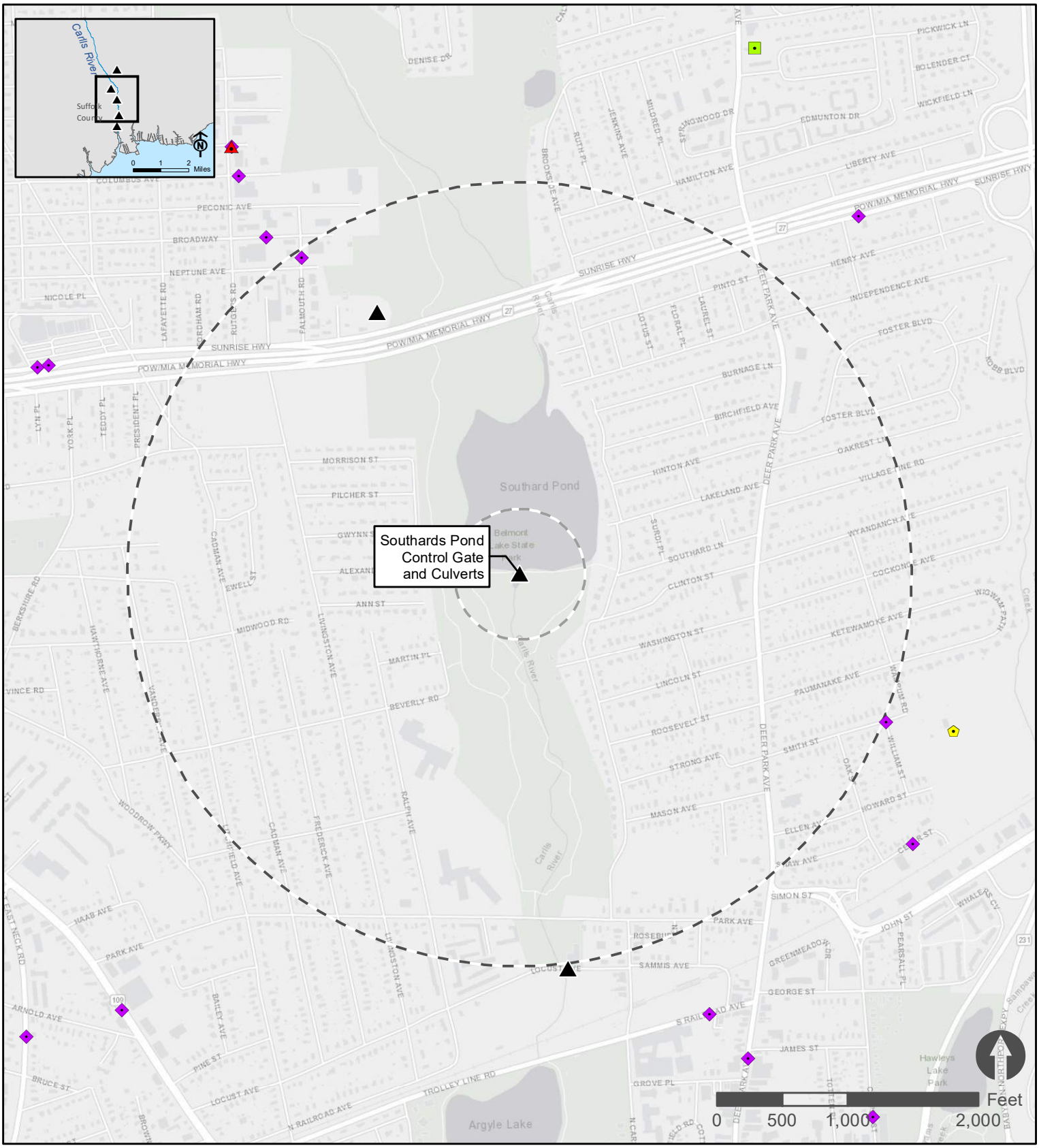

- Project Area
- Project Area 500 foot radius
- Project Area 3,000 foot radius
- Hazardous Waste Generators (Active RCRA)
- Toxic Release Inventory (TRI)
- NYSDEC Remediation Site

NYSDEC Bulk Storage Database

- Petroleum Bulk Storage
- Chemical Bulk Storage

Figure 6c

Remediation Sites

Carlls River Watershed Project

Source: U.S. Environmental Protection Agency, NYS Department of Environmental Conservation, ESRI World Light Gray Canvas Base

Louis Berger

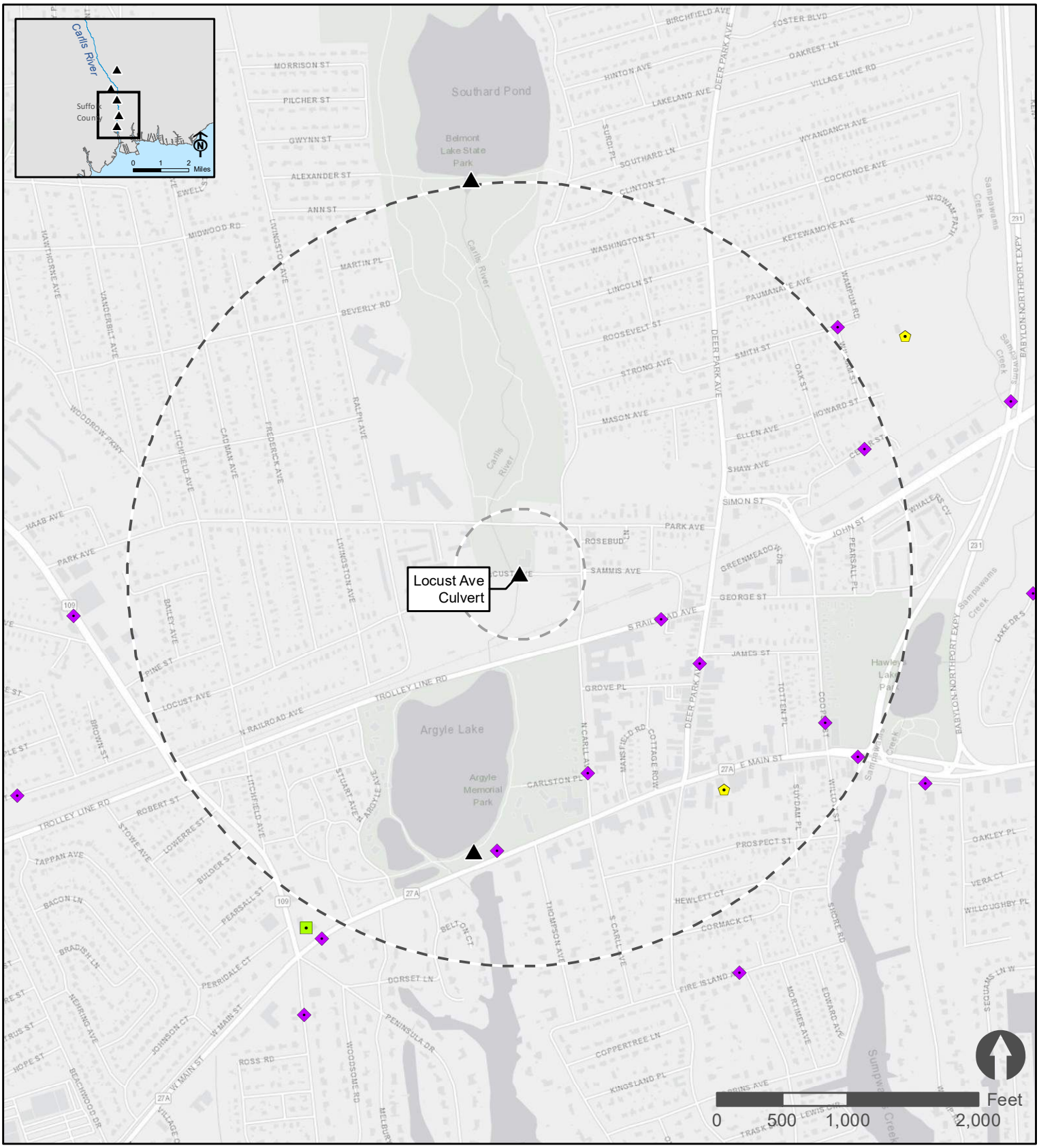

▲ Project Area

Project Area 500 foot radius

Project Area 3,000 foot radius

Hazardous Waste Generators (Active RCRA)

NYSDEC Remediation Site

NYSDEC Bulk Storage Database

Petroleum Bulk Storage

Figure 6d

Remediation Sites

Carlls River
Watershed Project

Source: U.S. Environmental Protection Agency, NYS Department of Environmental Conservation, ESRI World Light Gray Canvas Base

Louis Berger

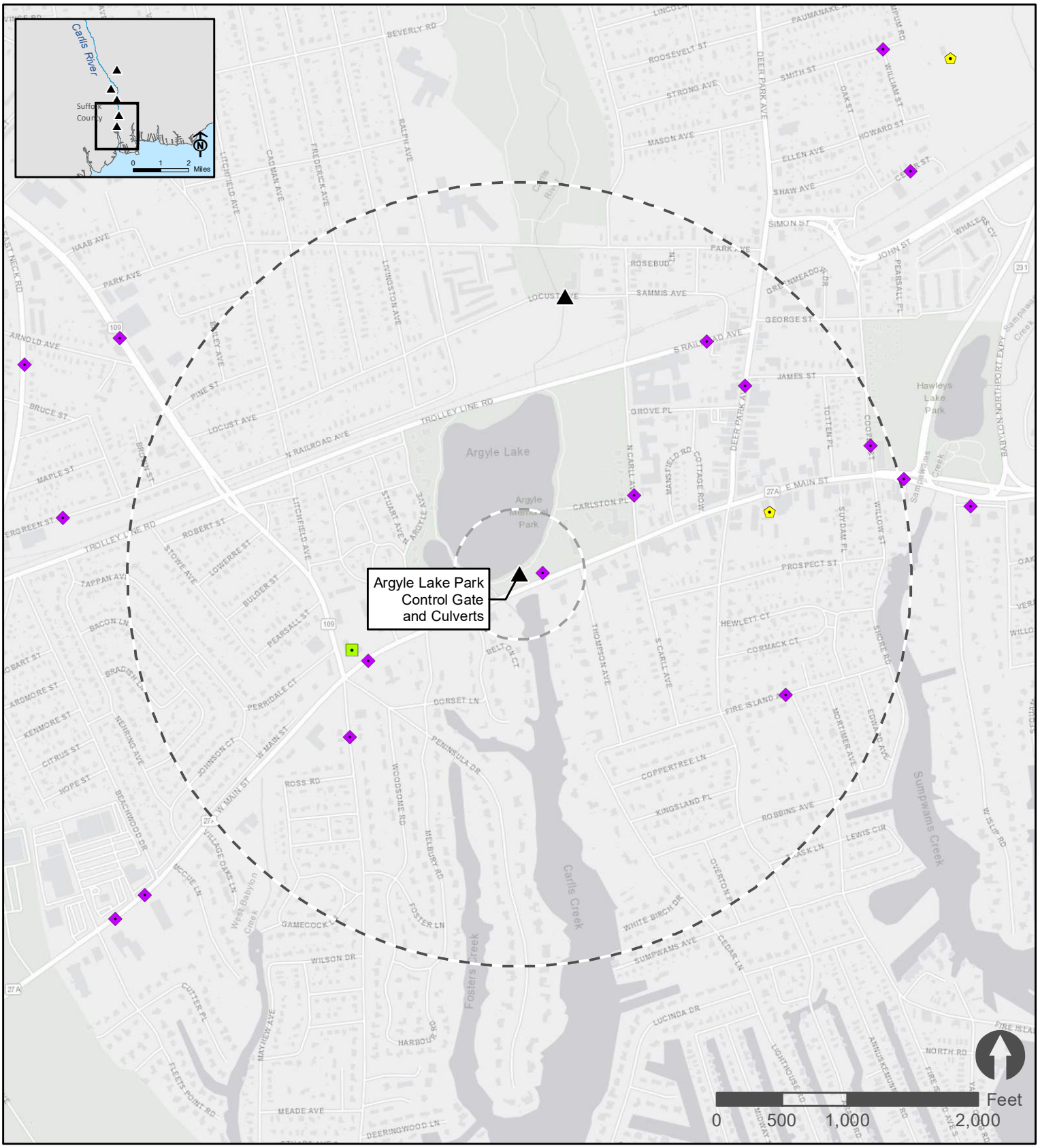

▲ Project Area

Project Area 500 foot radius

Project Area 3,000 foot radius

Hazardous Waste Generators (Active RCRA)

NYSDEC Remediation Site

NYSDEC Bulk Storage Database

Petroleum Bulk Storage

Figure 6e

Remediation Sites

Carlls River
Watershed Project

Source: U.S. Environmental Protection Agency, NYS Department of Environmental Conservation, ESRI World Light Gray Canvas Base

Louis Berger

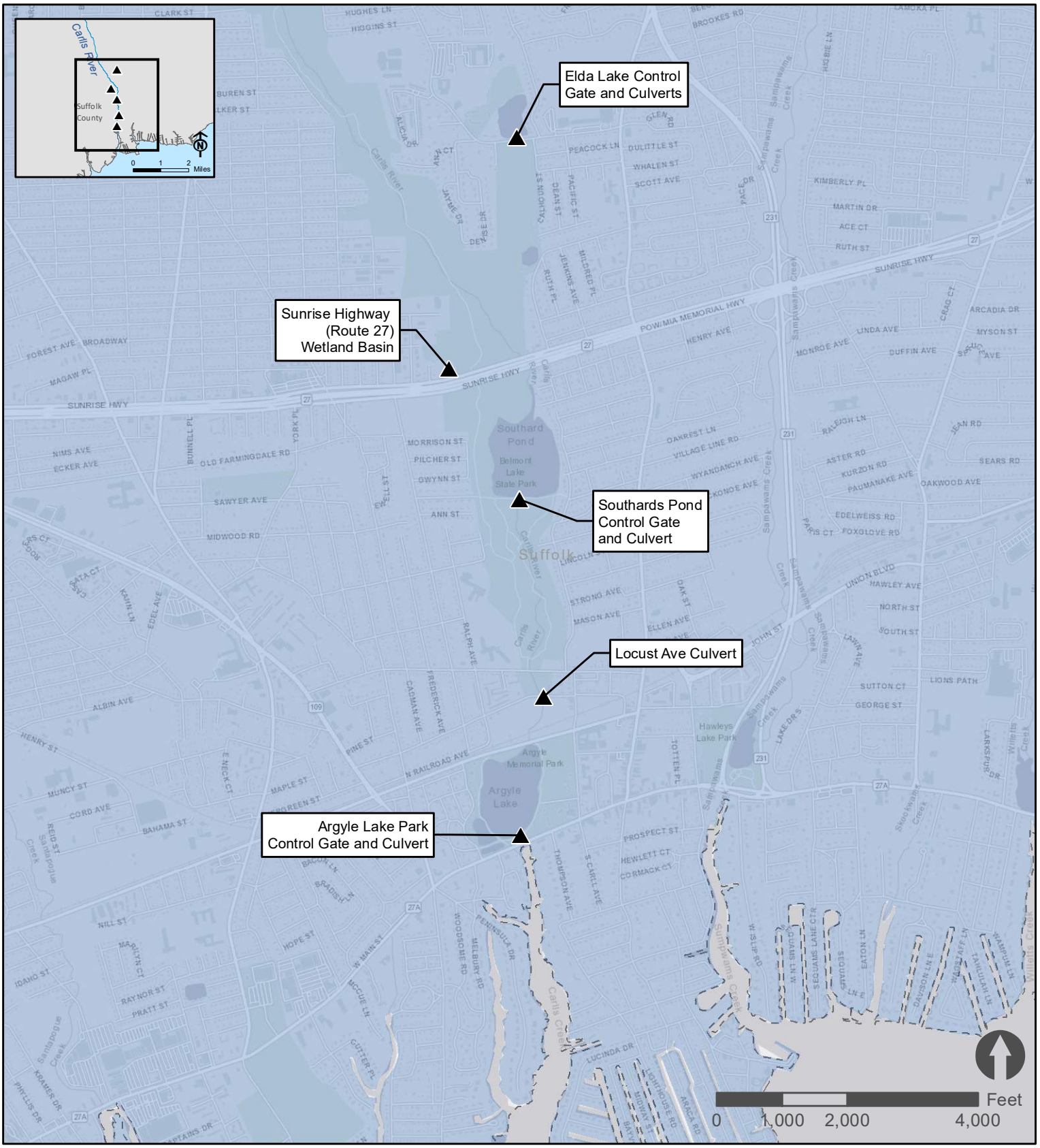

▲ Project Area

Nassau-Suffolk Sole-Source Aquifer (SSA)

Figure 7

Sole Source Aquifer

Carlls River
Watershed Project

Source: FEMA, ESRI World Light Gray Canvas Base

Louis Berger

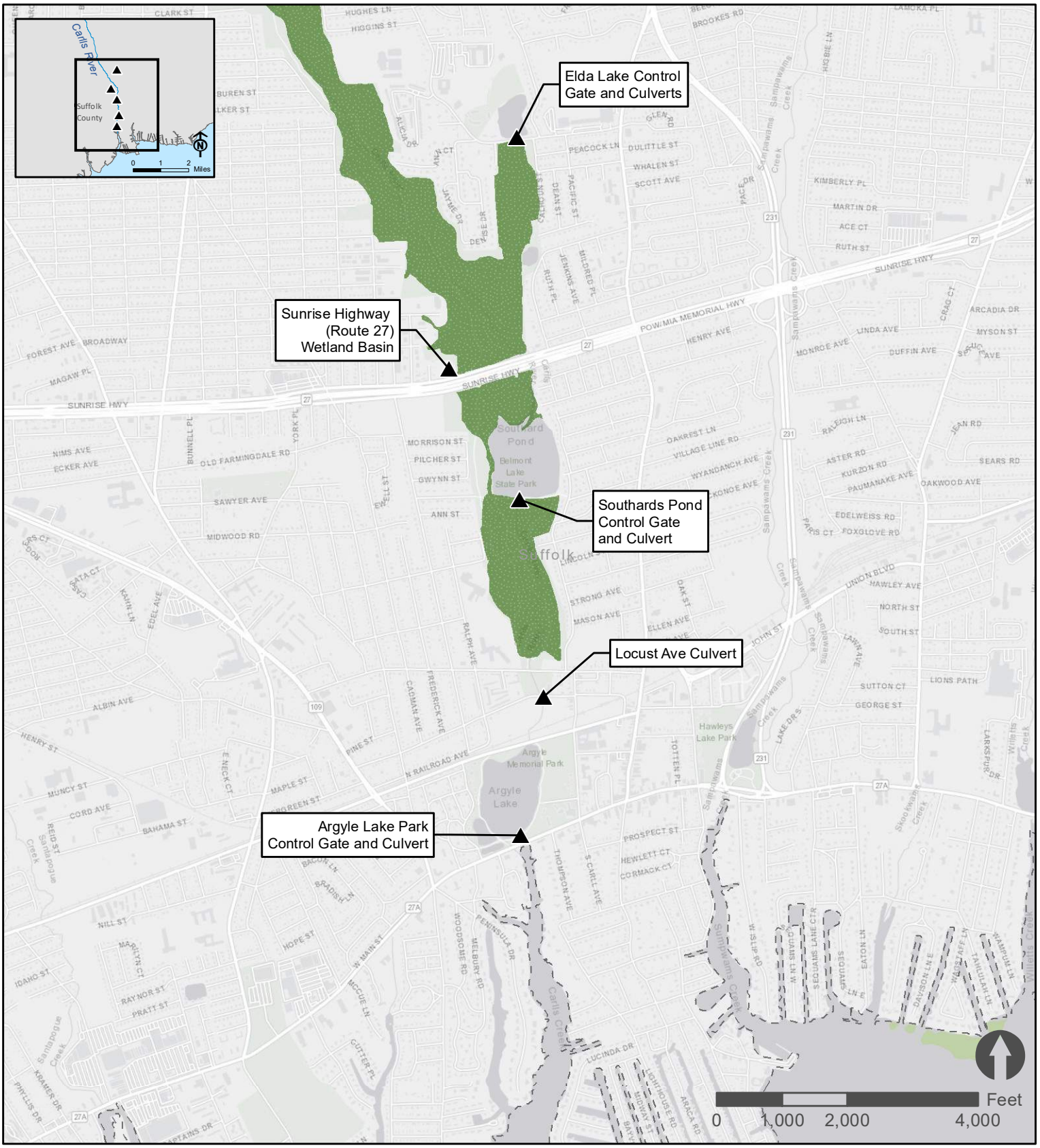

▲ Project Area

Significant Natural and Vegetative Communities

Red maple-blackgum swamp

Marine eelgrass meadow

Figure 8

Significant Natural and Vegetative Communities

Carlls River Watershed Project

Source: New York Natural Heritage Program, ESRI World Light Gray Canvas Base

Louis Berger

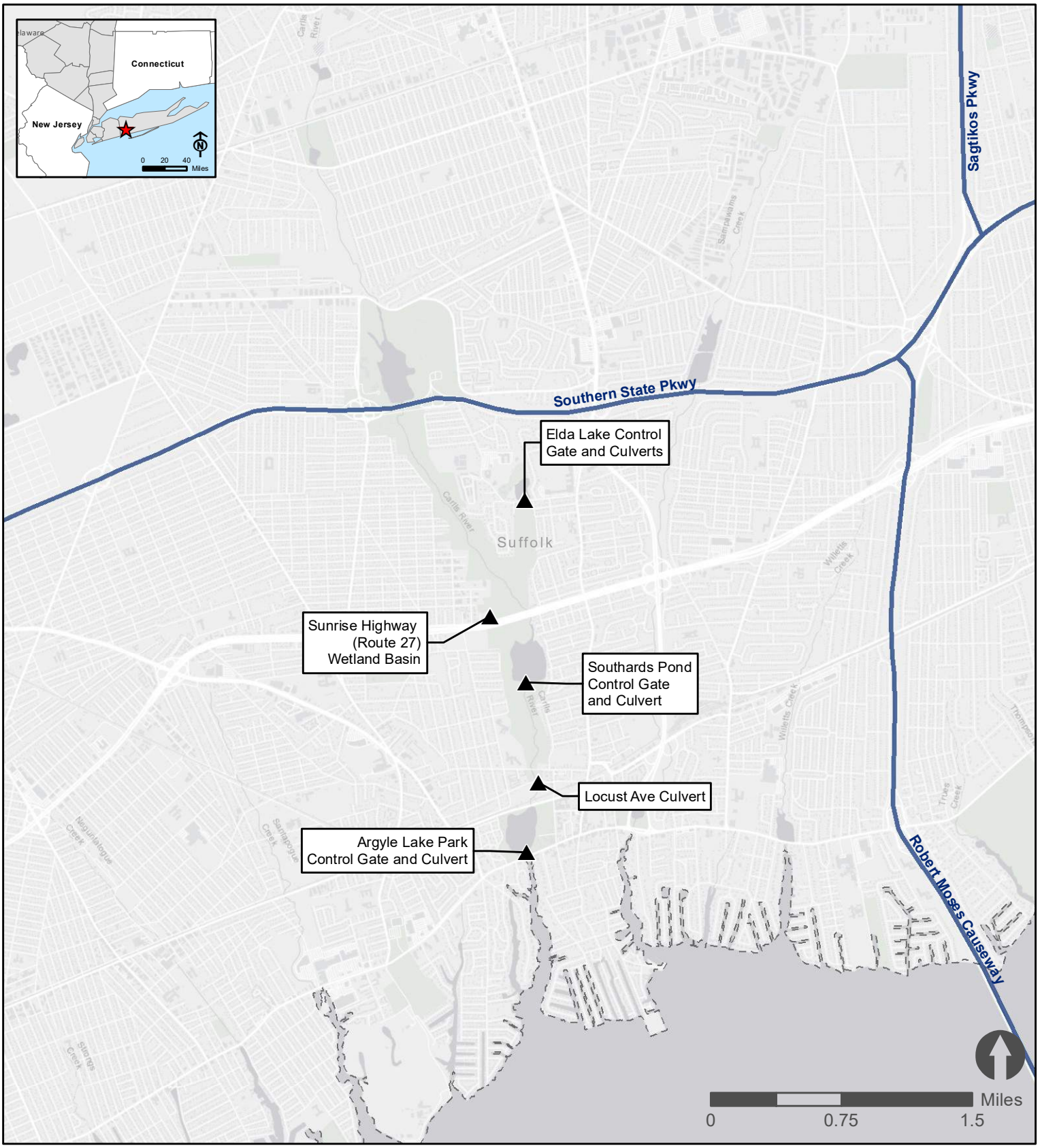

▲ Project Area

New York State Scenic Byway

Figure 9

Scenic Areas

Carlls River Watershed Project

Source: NYS Office of Planning & Development, NYS Department of Transportation, ESRI World Light Gray Canvas Base

Louis Berger

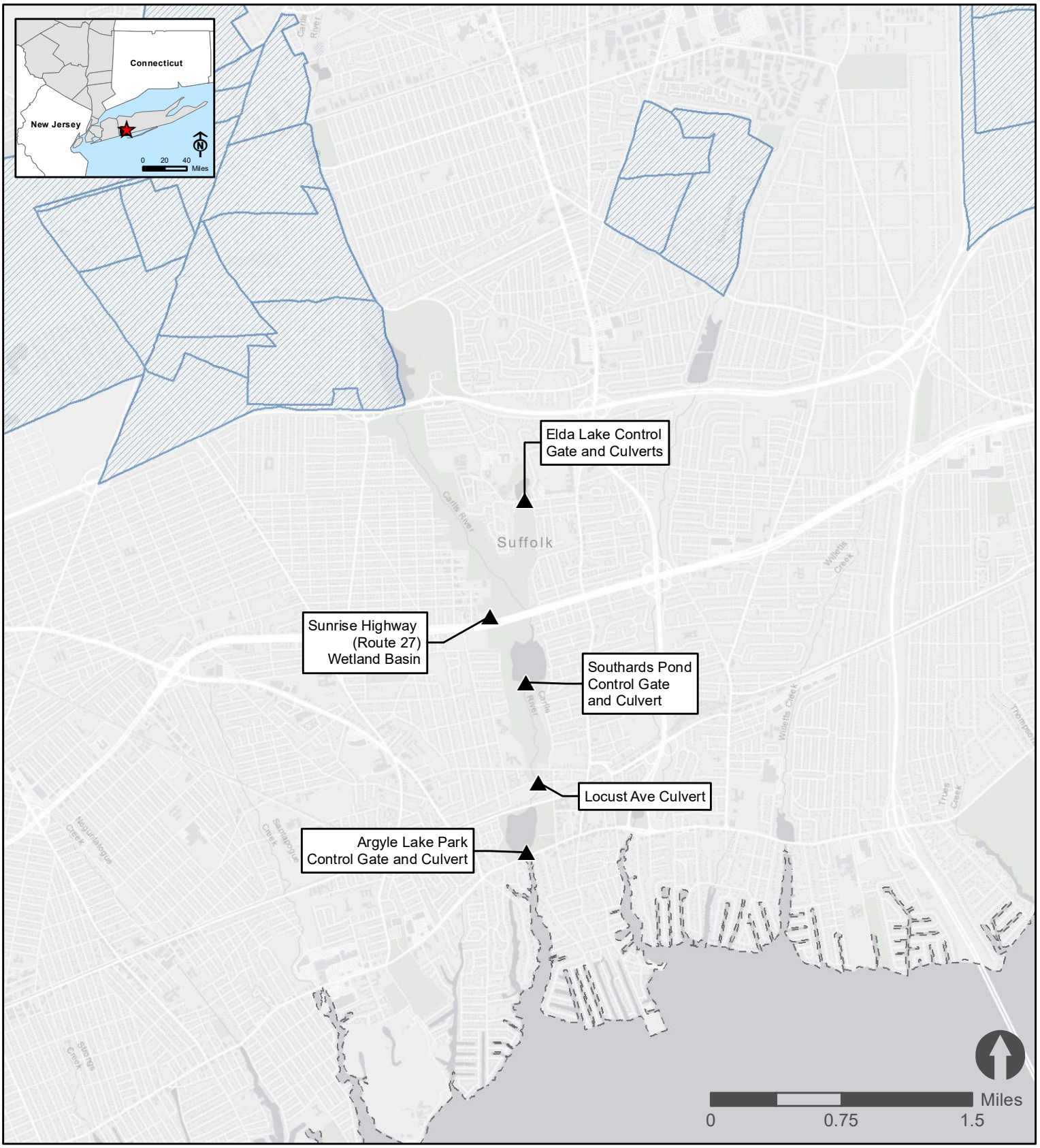

▲ Project Area

Potential Environmental Justice Area

Figure 10

Potential Environmental Justice Areas

Carlls River
Watershed Project

Source: NYS Department of Environmental Conservation, ESRI World Light Gray Canvas Base

Louis Berger

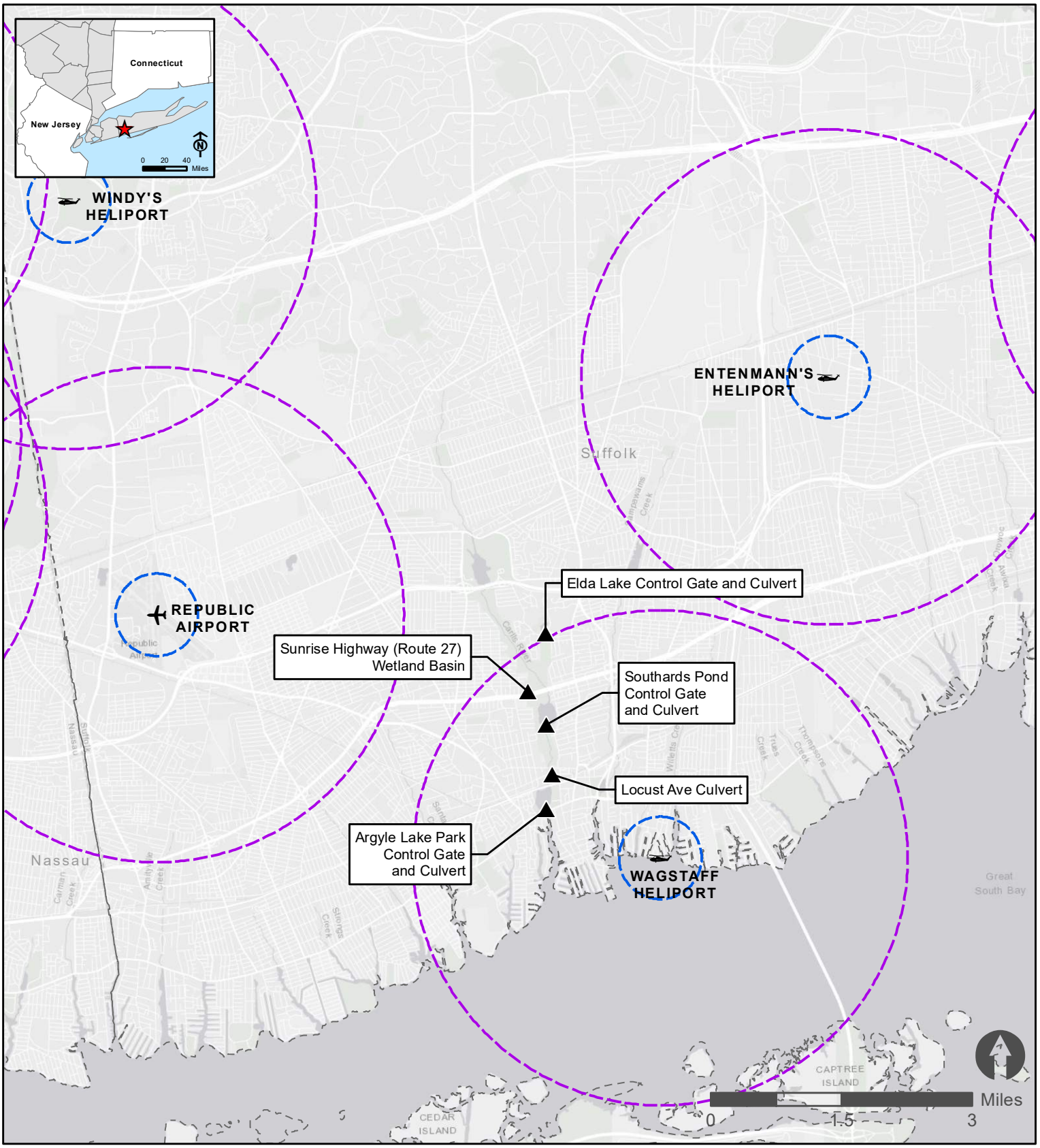

▲ Project Area
Airport
Heliport
2,500 ft Radius
15,000 ft Radius

Figure 11

Airports and Heliports within the Vicinity of the Proposed Projects

Carlls River Watershed Project

Source: Federal Aviation Administration, ESRI World Light Gray Canvas Base

Louis Berger

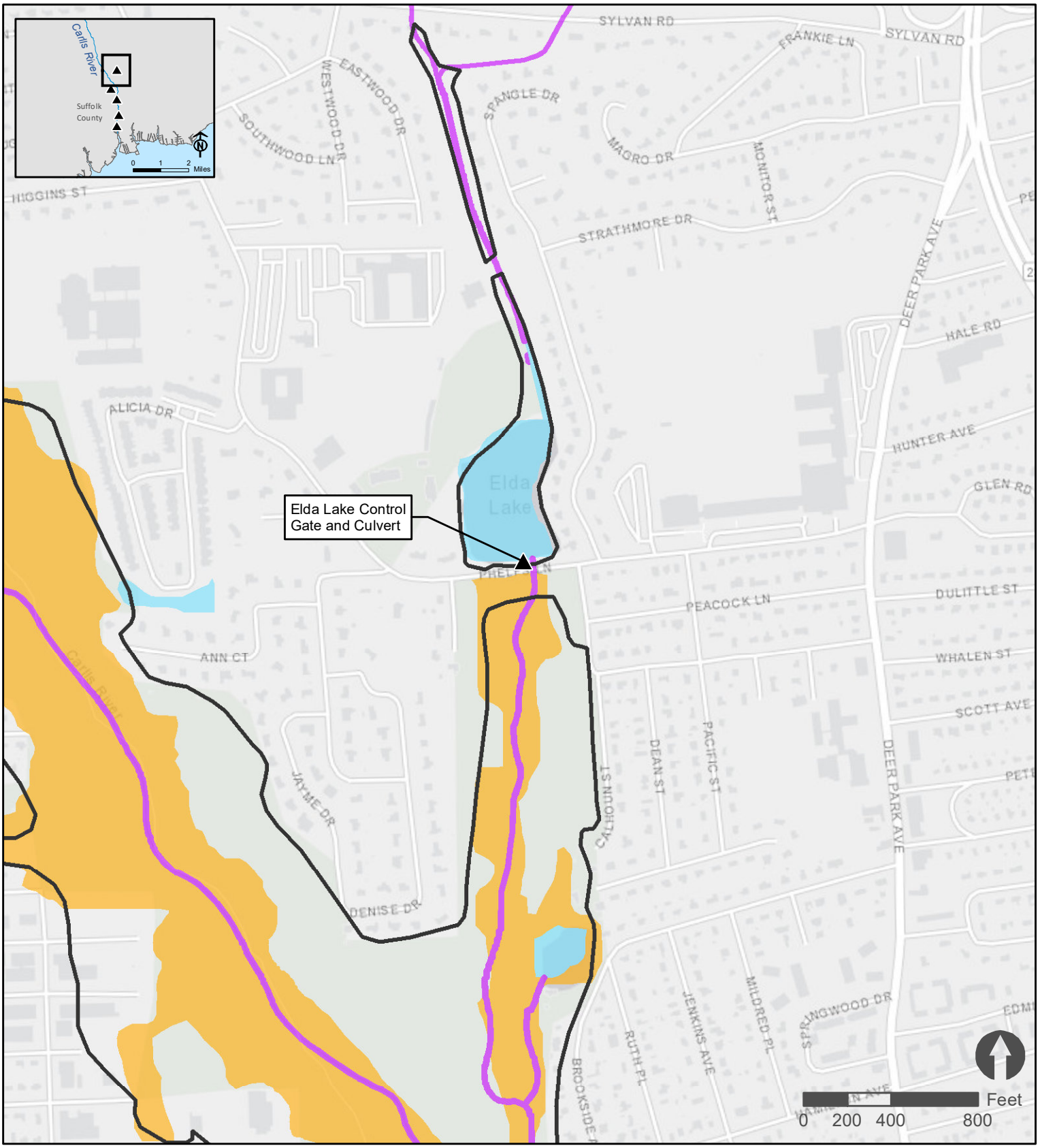

▲ Project Area

NYSDEC Regulated Freshwater Wetland

NWI Wetland Type

Freshwater Forested/Shrub Wetland

Freshwater Pond

Riverine

Figure 12a

Wetlands

Carlls River
Watershed Project

Source: U.S. Fish and Wildlife Service, NYS Department of Environmental Conservation, ESRI World Light Gray Canvas Base

Louis Berger

▲ Project Area

NYSDEC Regulated Freshwater Wetland

NWI Wetland Type

Freshwater Emergent Wetland

Freshwater Forested/Shrub Wetland

Freshwater Pond

Riverine

Lake

Figure 12b

Wetlands

Carlls River Watershed Project

Source: U.S. Fish and Wildlife Service, NYS Department of Environmental Conservation, ESRI World Light Gray Canvas Base

Louis Berger

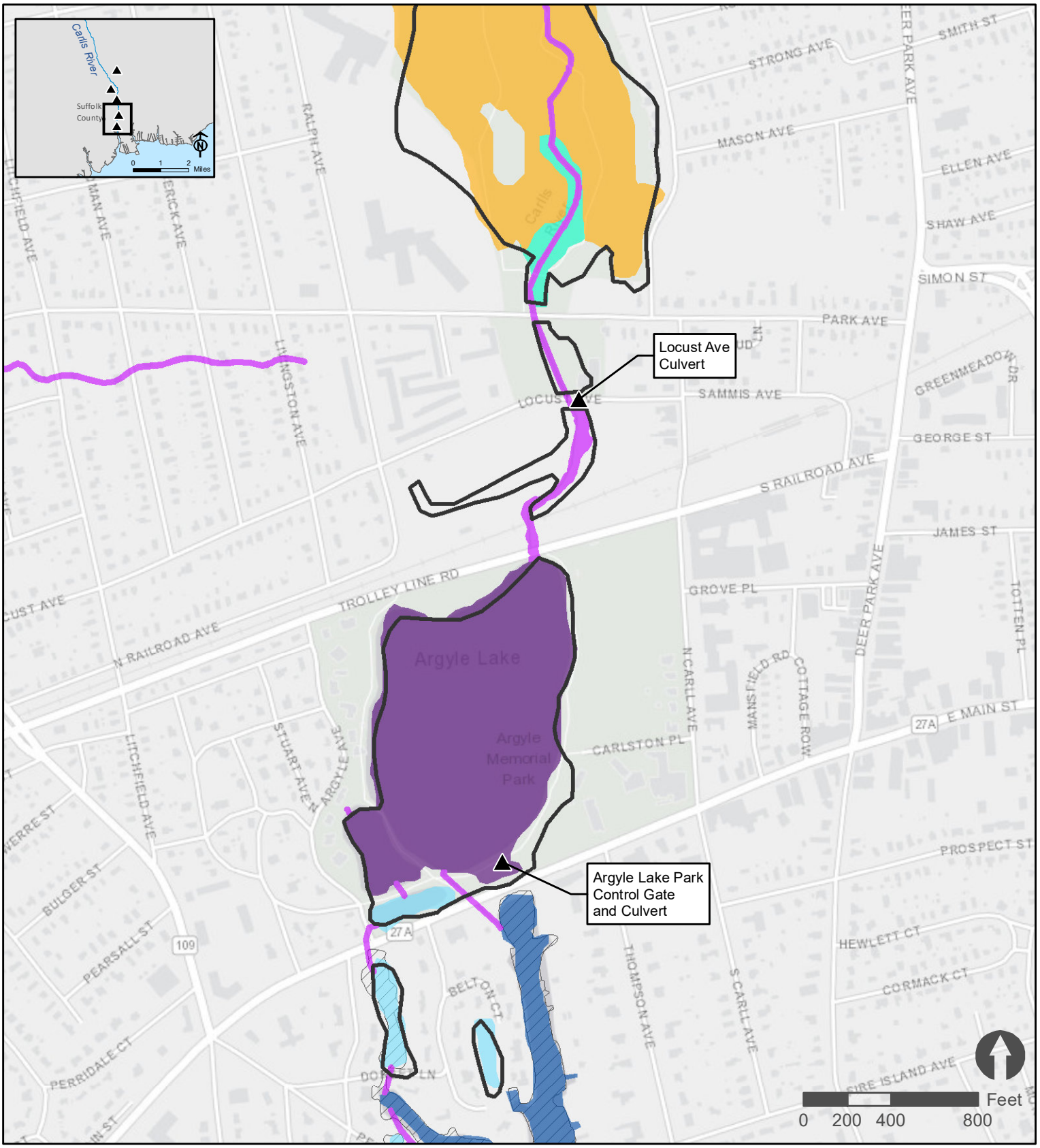

▲ Project Area

NYSDEC Tidal Wetland

NYSDEC Regulated Freshwater Wetland

NWI Wetland Type

Estuarine and Marine Deepwater

Freshwater Emergent Wetland

Freshwater Forested/Shrub Wetland

Freshwater Pond

Riverine

Lake

Figure 12c

Wetlands

Carlls River Watershed Project

Source: U.S. Fish and Wildlife Service, NYS Department of Environmental Conservation, ESRI World Light Gray Canvas Base

Louis Berger

APPENDIX A – CORRESPONDENCE: NEW YORK DEPARTMENT OF STATE, DIVISION OF COASTAL RESOURCES; COASTAL ZONE CONSISTENCY

Governor's Office of
Storm Recovery

October 29, 2018

Mr. Matt Maraglio
Supervisor, Consistency Review Unit
Division of Coastal Resources
New York State Department of State One Commerce Plaza
99 Washington Avenue Albany, New York
12231-0001

Re: State's Coastal Management Program Consistency Review of Carll's River Tributary Watershed Project, Town of Babylon, Suffolk County, NY

Dear Mr. Maraglio:

The Governor's Office of Storm Recovery (GOSR), acting under the auspices of New York State Homes and Community Renewal's (HCR) Housing Trust Fund Corporation (HTFC), on behalf of the United States Department of Housing & Urban Development (HUD), is currently preparing an environmental review for the proposed action. GOSR is acting as HUD's non-federal representative for the purposes of compliance with the National Environmental Policy Act (NEPA). The Town of Babylon is proposing implementation of five projects within the Carlls River tributary watershed in the Town of Babylon, Suffolk County, New York (see **Figure 1**). Following a hydrologic and hydraulic analyses performed in 2016 as part of a comprehensive watershed engineering study, funded through this Program, a number of projects were identified based on ease of implementation/constructability, overall effectiveness in addressing water quality or flood control for the watershed, and stakeholder input. The Town is requesting a total of $6,801,908.00 in CDBG-DR funding for the implementation of five watershed improvements which would manage water flow in the Carlls River watershed to avert flooding within the Village of Babylon and the Town of Babylon's hamlet of West Babylon. This multicomponent project will allow water levels within this watershed to be mamaged by means of dams, floodgates, and new stormwater retention wetland areas to increase flood protection and reduce the exposure of major assets and residential areas to severe flooding and flood damage.

Only one of these projects, Argyle Lake Infrastructure Improvements, would be located within the New York State Coastal Zone Boundary (See **Figure 2**) and is described below.

<u>Argyle Lake Infrastructure Improvements</u>

Argyle Lake is the southernmost and final impoundment along Carll's River, before it enters Carll's Creek and the Great South Bay. Argyle Lake has a contributory drainage area of approximately 15,000 acres and surface area of approximately 25 acres. The existing outlet works consist of: three concrete arch primary spillways, which discharge to a series of tiered plunge pools; two CMP arch spillways on either side of the primary spillways; a more recent fish ladder to the west of the western CMP arch; an existing control gate between the easternmost concrete primary spillway and eastern CMP arch; runoff that cannot be conveyed through the primary spillway or relief culverts will flow over the Argyle Lake embankment, which is approximately 1.5' higher than the primary spillway.

Proposed infrastructure improvements include: installation of a new control gate that can be moved in advance of anticipated storms to provide pre-emptive lowering of the lake ; and replacement of existing relief culvert with larger structure.

Hydraulic analysis determined that although the incorporation of a larger spillway slightly reduces downstream flow attenuation, upstream ponding elevations are lowered even further. When used in conjunction with the gate operation, a larger relief culvert would result in enhanced outlet performance.

New York State Coastal Policies 1 through 44 have been reviewed with their respect to this project. Based on this review, GOSR has determined that the above-referenced proposed activities are consistent with the Policies of the New York State Coastal Management Program (CMP) and will not hinder the achievement of those Policies. A summary of each the project's consistency with the State Coastal Policies is included as an attachment.

GOSR is seeking the New York Department of State's (NYDOS) concurrence with GOSR's Coastal Zone Consistency Determination, in accordance with the requirement of the Coastal Zone Management Act of 1972 (15 CFR Part 930). Since there are seasonal contruction constraints which will be imposed by NYSDEC , along with Program deadlines, your prioritization of this review is greatly appreciated.

If you have questions or require additional information regarding this request, please contact me at James.McAllister@stormrecovery.ny.gov. Thank you for your time and consideration. GOSR looks forward to your office's response.

Sincerely,

James McAllister
Senior Environmental Project Manager

Bureau of Environmental Review and Assessment Governor's Office of Storm Recovery
500 Bi-County Boulevard, Suite 300,
Farmingdale, NY 11735

CC: Denise Caldwell

Attachments:
Figure 1 - Carll's River - Regional Location
Figure 2 - Carll's River - Coastal Zone Boundary
Federal Consistency Assessment Form (FCAF)
FCAF Addendum

ATTACHMENTS

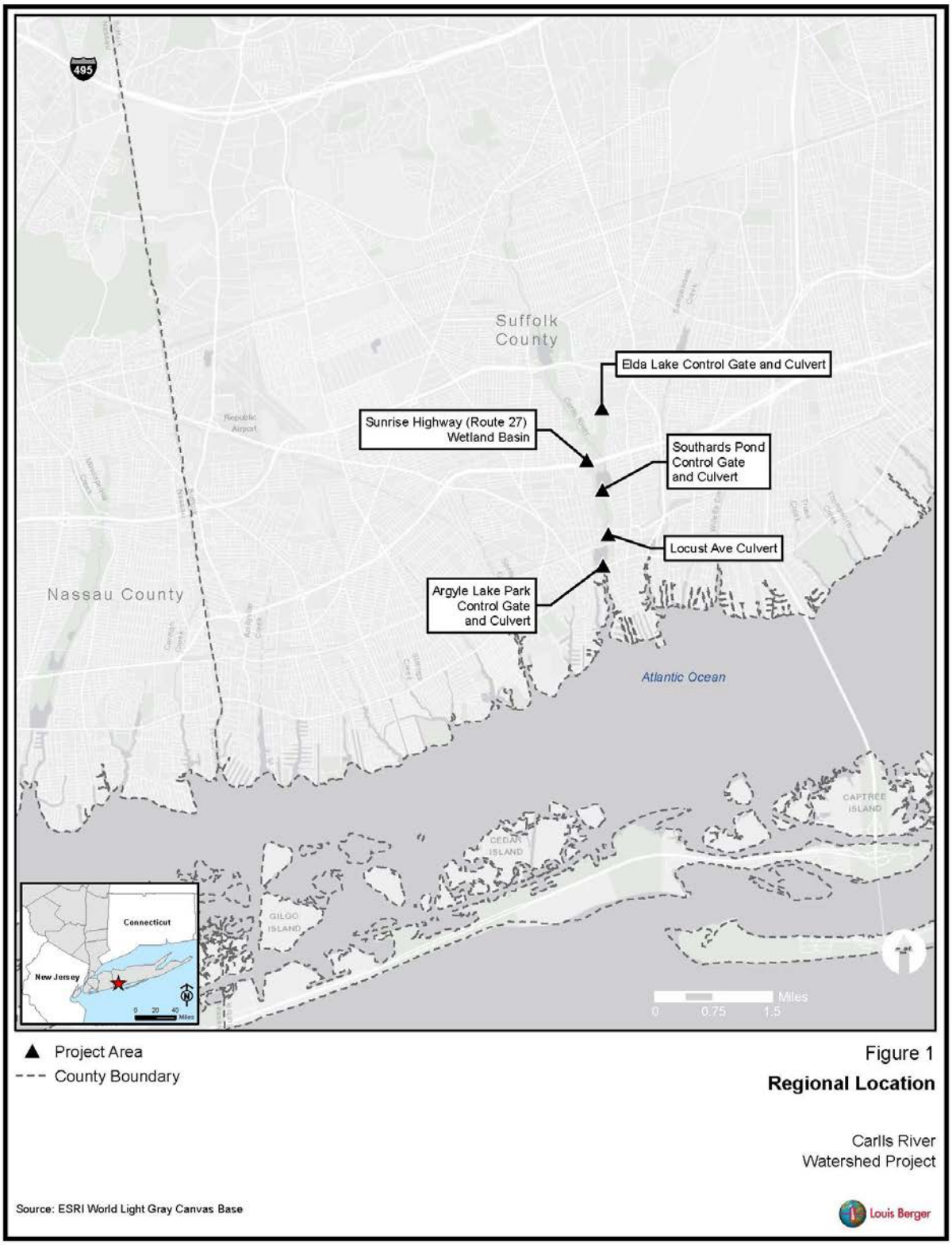

Figure 1. Project Locations

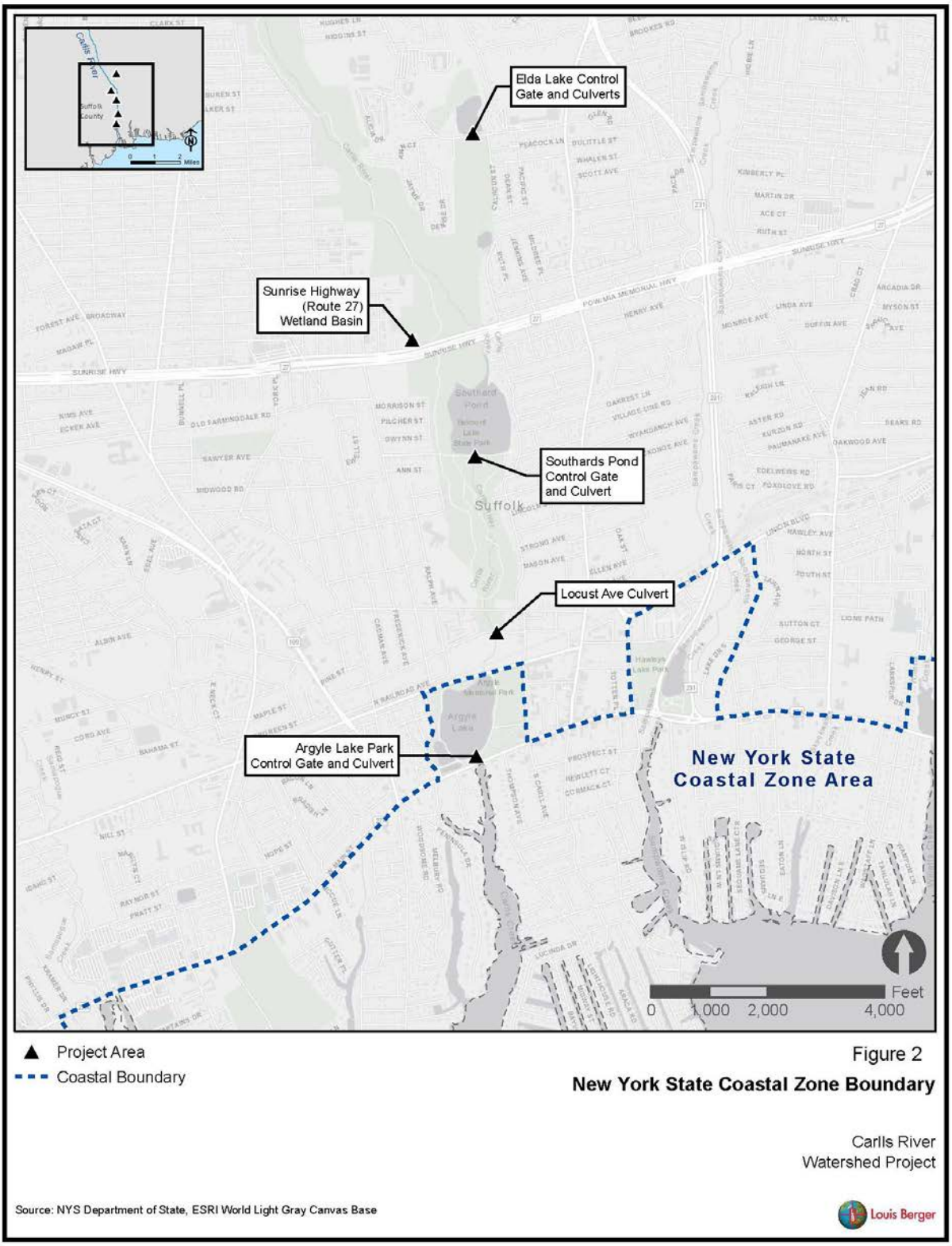

Figure 2: Project Locations in Coastal Zone

NEW YORK STATE DEPARTMENT OF STATE
COASTAL MANAGEMENT PROGRAM

Federal Consistency Assessment Form

An applicant, seeking a permit, license, waiver, certification or similar type of approval from a federal agency which is subject to the New York State Coastal Management Program (CMP), shall complete this assessment form for any proposed activity that will occur within and/or directly affect the State's Coastal Area. This form is intended to assist an applicant in certifying that the proposed activity is consistent with New York State's CMP as required by U.S. Department of Commerce regulations (15 CFR 930.57). It should be completed at the time when the federal application is prepared. The Department of State will use the completed form and accompanying information in its review of the applicant's certification of consistency.

A. **APPLICANT** (please print)

1. Name: Governor's Office of Storm Recovery (GOSR)
2. Address: 500 Bi-County Boulevard, Suite 300, Farmingdale NY 11735
3. Telephone: Area Code ( ) 646-256-9485

B. **PROPOSED ACTIVITY:**

1. Brief description of activity:

Installation of a new control gate; operation of gate prior to major anticipated storms to provide pre-emptive lowering; replacement of existing relief culvert with larger structure.

2. Purpose of activity:

Prevent runoff that cannot currently be conveyed through the primary spillway or relief culverts from flowing over the Argyle Lake embankment

3. Location of activity:

Suffolk	Town of Babylon	Argyle Lake
County	City, Town, or Village	Street or Site Description

4. Type of federal permit/license required: _____

5. Federal application number, if known: _____

6. If a state permit/license was issued or is required for the proposed activity, identify the state agency and provide the application or permit number, if known:

_____

C. **COASTAL ASSESSMENT** Check either "YES" or "NO" for each of these questions. The numbers following each question refer to the policies described in the CMP document (see footnote on page 2) which may be affected by the proposed activity.

1. Will the proposed activity result in any of the following:	YES	NO
a. Large physical change to a site within the coastal area which will require the preparation of an environmental impact statement? (11, 22, 25, 32, 37, 38, 41, 43)		✔
b. Physical alteration of more than two acres of land along the shoreline, land under water or coastal waters? (2, 11, 12, 20, 28, 35, 44)		✔
c. Revitalization/redevelopment of a deteriorated or underutilized waterfront site? (1)		✔
d. Reduction of existing or potential public access to or along coastal waters? (19, 20)		✔
e. Adverse effect upon the commercial or recreational use of coastal fish resources? (9,10)		✔
f. Siting of a facility essential to the exploration, development and production of energy resources in coastal waters or on the Outer Continental Shelf? (29)		✔
g. Siting of a facility essential to the generation or transmission of energy? (27)		✔
h. Mining, excavation, or dredging activities, or the placement of dredged or fill material in coastal waters? (15, 35)		✔
i. Discharge of toxics, hazardous substances or other pollutants into coastal waters? (8, 15, 35)		✔
j. Draining of stormwater runoff or sewer overflows into coastal waters? (33)	✔	
k. Transport, storage, treatment, or disposal of solid wastes or hazardous materials? (36, 39)		✔
l. Adverse effect upon land or water uses within the State's small harbors? (4)		✔

2. Will the proposed activity affect or be located in, on, or adjacent to any of the following:	YES	NO
a. State designated freshwater or tidal wetland? (44)	✔	
b. Federally designated flood and/or state designated erosion hazard area? (11, 12, 17)		✔
c. State designated significant fish and/or wildlife habitat? (7)		✔
d. State designated significant scenic resource or area? (24)		✔
e. State designated important agricultural lands? (26)		✔
f. Beach, dune or Barrier Island? (12)		✔
g. Major ports of Albany, Buffalo, Ogdensburg, Oswego or New York? (3)		✔
h. State, county, or local park? (19, 20)		✔
i. Historic resource listed on the National or State Register of Historic Places? (23)		✔

3. Will the proposed activity require any of the following:	YES	NO
a. Waterfront site? (2, 21, 22)		✔
b. Provision of new public services or infrastructure in undeveloped or sparsely populated sections of the coastal area? (5)		✔
c. Construction or reconstruction of a flood or erosion control structure? (13, 14, 16)	✔	
d. State water quality permit or certification? (30, 38, 40)	✔	
e. State air quality permit or certification? (41, 43)		✔

4. Will the proposed activity occur within and/or affect an area covered by a State-approved local waterfront revitalization program, or State-approved regional coastal management program? (see policies in program document*)		✔

D. **ADDITIONAL STEPS**

1. If all of the questions in Section C are answered "NO", then the applicant or agency shall complete Section E and submit the documentation required by Section F.

2. If any of the questions in Section C are answered "YES", then the applicant or agent is advised to consult the CMP, or where appropriate, the local waterfront revitalization program document*. The proposed activity must be analyzed in more detail with respect to the applicable state or local coastal policies. On a separate page(s), the applicant or agent shall: (a) identify, by their policy numbers, which coastal policies are affected by the activity, (b) briefly assess the effects of the activity upon the policy; and, (c) state how the activity is consistent with each policy. Following the completion of this written assessment, the applicant or agency shall complete Section E and submit the documentation required by Section F.

E. **CERTIFICATION**

The applicant or agent must certify that the proposed activity is consistent with the State's CMP or the approved local waterfront revitalization program, as appropriate. If this certification cannot be made, the proposed activity shall not be undertaken. If this certification can be made, complete this Section.

"The proposed activity complies with New York State's approved Coastal Management Program, or with the applicable approved local waterfront revitalization program, and will be conducted in a manner consistent with such program."

Applicant/Agent's Name: James McAllister, Governor's Office of Storm Recovery

Address: 500 Bi-County Boulevard, Suite 300, NY 11735

Telephone: Area Code ( ) 646-256-9485

Applicant/Agent's Signature: _____ Date: 10/29/18

F. **SUBMISSION REQUIREMENTS**

1. The applicant or agent shall submit the following documents to the **New York State Department of State, Office of Planning and Development, Attn: Consistency Review Unit, One Commerce Plaza-Suite 1010, 99 Washington Avenue, Albany, New York 12231.**

a. Copy of original signed form.
b. Copy of the completed federal agency application.
c. Other available information which would support the certification of consistency.

2. The applicant or agent shall also submit a copy of this completed form along with his/her application to the federal agency.

3. If there are any questions regarding the submission of this form, contact the Department of State at (518) 474-6000.

*These state and local documents are available for inspection at the offices of many federal agencies, Department of environmental Conservation and Department of State regional offices, and the appropriate regional and county planning agencies. Local program documents are also available for inspection at the offices of the appropriate local government.

NEW YORK STATE DEPARTMENT OF STATE
COASTAL MANAGEMENT PROGRAM
Federal Consistency Assessment Form
Supplemental Narrative

Location of Activity: Town of Babylon – Argyle Lake

The following New York State coastal policies could be affected by the proposed activity. The effects of each activity upon the policy have been identified and how the activity is consistent with each policy is provided.

Policy 14

Activities and development, including the construction or reconstruction of erosion protection structures, shall be undertaken so that there will be no measurable increase in erosion or flooding at the site of such activities or development, or at other locations.

Consistent. Proposal is not anticipated to increase erosion/flooding. Proposed improvements would be placed to lessen flooding in the area.

Policy 16

Public funds shall only be used for erosion protective structures where necessary to protect human life, and new development which requires a location within or adjacent to an erosion hazard area to be able to function, or existing development; and only where the public benefits outweigh the long term monetary and other costs including the potential for increasing erosion and adverse effects on natural protective features.

N/A. Proposal would not facilitate new development.

Policy 30

Municipal, industrial, and commercial discharge of pollutants, including but not limited to toxic and hazardous substances, into coastal waters will conform to state and national water quality standards.

Consistent. The proposal purpose is to decrease flooding and prevent the discharge of runoff into surface and ground waters. Therefore, the proposed project is consistent with this policy.

Policy 33

Best management practices will be used to ensure the control of stormwater runoff and combined sewer overflows draining into coastal waters.

Consistent. Best management practices would be used to control storm water runoff during and after construction. The project would not construct combined sewers or combined sewer overflows.

Policy 38

The quality and quantity of surface water and groundwater supplies will be conserved and protected, particularly where such waters constitute the primary or sole source of water supply.

Consistent. The proposal would improve the quality of surface and groundwater by reducing the runoff that cannot be conveyed through the primary spillway or relief culverts which currently flows over the Argyle Lake embankment.

Policy 44

Preserve and protect tidal and freshwater wetlands and preserve the benefits derived from these areas.

Consistent. Proposal would not adversely impact tidal or freshwater wetlands. The proposal would improve tidal marshes by reducing the runoff that cannot be conveyed through the primary spillway or relief culverts which currently flows over the Argyle Lake embankment, increasing the benefits derived from these areas.

STATE OF NEW YORK
DEPARTMENT OF STATE
ONE COMMERCE PLAZA
99 WASHINGTON AVENUE
ALBANY, NY 12231-0001
WWW.DOS.NY.GOV

ANDREW M. CUOMO
GOVERNOR

ROSSANA ROSADO
SECRETARY OF STATE

October 31, 2018

James P. McAllister
Senior Environmental Project Manager
Bureau of Environmental Review and Assessment
Governor's Office of Storm Recovery
500 Bi-County Boulevard, Suite 300
Farmingdale, New York 11735

Re: **F-2018-0898(FA)**
Governor's Office of Storm Recovery
NYS Homes and Community Renewal
Carll's River Watershed
Town of Babylon, Suffolk County

Installation of a new control gate; operation of gate prior to major anticipated storms to provide pre-emptive lowering; replacement of existing relief culvert with larger structure
General Concurrence - No Objection to Funding

Dear Mr. McAllister,

The Department of State (DOS) received the information you submitted regarding the above proposed federal financial assistance on 10/29/2018 and has completed its review. Based on this review, the Department of State has no objection to the release of United States Department of Housing and Urban Development (HUD) Community Development Block Grant – Disaster Recovery (CDBG-DR) funding in support of the proposed project.

This concurrence pertains to the federal financial assistance activity or activities for this project only. If certain activities may require a federal permit or other form of federal agency authorization, the Department of State would conduct separate consistency review(s) of permit activities at the time such application(s) may be made to a federal agency.

When communicating with us regarding this matter, please contact us at (518) 474-6000 and refer to our file # F-2018-0898(FA).

Sincerely,

Matthew P. Maraglio
Supervisor, Consistency Review Unit
Office of Planning, Development and
Community Infrastructure

MM/dc

NEW YORK STATE OF OPPORTUNITY. | Department of State

APPENDIX B – CORRESPONDENCE: NATURAL HERITAGE PROGRAM AND U.S. FISH AND WILDLIFE SERVICE

October 22, 2018

NY Natural Heritage Program – Information Services
NYS DEC
625 Broadway, 5th Floor
Albany, NY 12233-4757

VIA EMAIL: NaturalHeritage@dec.ny.gov

Re: Request for Information
Carlls River Tributary/Watershed Project
Village of Babylon, West Babylon, Suffolk County, New York

To whom it may concern:

The Town of Babylon is proposing the implementation of watershed improvements which would manage water flow in the Carlls River tributary watershed to avert flooding within the Village of Babylon and the Town of Babylon Hamlet of West Babylon (see attached Figures). As part of the environmental review process, an Environmental Assessment of the proposed project is being prepared. The Governor's Office of Storm Recovery (GOSR) is the lead agency under the National Environmental Policy Act (NEPA) and State Environmental Quality Review Act (SEQRA) and related laws for the environmental review of the proposed Project. The proposed improvements would reduce flooding in communities adjacent to the river corridor as identified in the relevant Carlls River Tributary Watershed Project(s) from the Village of Babylon/West Babylon NYRCR Plan (March 2014). Additional objectives of the project are water quality protection and flood mitigation for the Carlls River Tributary Watershed.

This multicomponent project would allow water levels within this watershed to be adjusted by means of dams, floodgates, and new stormwater retention wetland areas to increase flood protection and reduce the exposure of major assets and residential areas to severe flooding and flood damage. Following a hydrologic and hydraulic analyses performed in 2016 as part of a comprehensive watershed engineering study, several projects were identified based on ease of implementation/constructability, overall effectiveness in addressing water quality or flood control for the watershed, and stakeholder input. The five specific components of the project are located at various points within the watershed area and are listed below:

1. Sunrise Highway
   - Construct a stormwater wetland basin

2. Elda Lake
   - Install new control gate;
   - Operate gate prior to major anticipated storms to provide pre-emptive lowering;
   - Construct a new primary spillway culvert; install a fish ladder

3. Southards Pond

- Install new control gate; operate gate prior to major anticipated storms to provide pre-emptive lowering;
- Replace two arch side relief culverts wit new, larger relief culvert;
- Install natural fish passage channel (preferred over fish ladder due to ecological benefits

4. Argyle Lake

- Install new control gate;
- Operate gate prior to major anticipated storms to provide pre-emptive lowering;
- Replace existing relief culvert with larger structure

5. Locust Avenue

- Replace existing 13' wide culvert with new 26' wide culvert

On behalf of GOSR, we are contacting your office for assistance in identifying the potential presence of any rare or federal and/or state threatened, endangered, proposed, or candidate species in the vicinity of the proposed project. In addition, information regarding the presence of any other species or habitats of special concern, including significant natural communities, in the vicinity of the proposed project is also requested.

If you have any questions, please feel free to contact me at (973) 407-1473 or tstewart@louisberger.com. Thank you for your consideration and cooperation.

Sincerely,

Tara Stewart

Tara Stewart
Senior Environmental Scientist
Louis Berger

Attachments

ATTACHMENTS

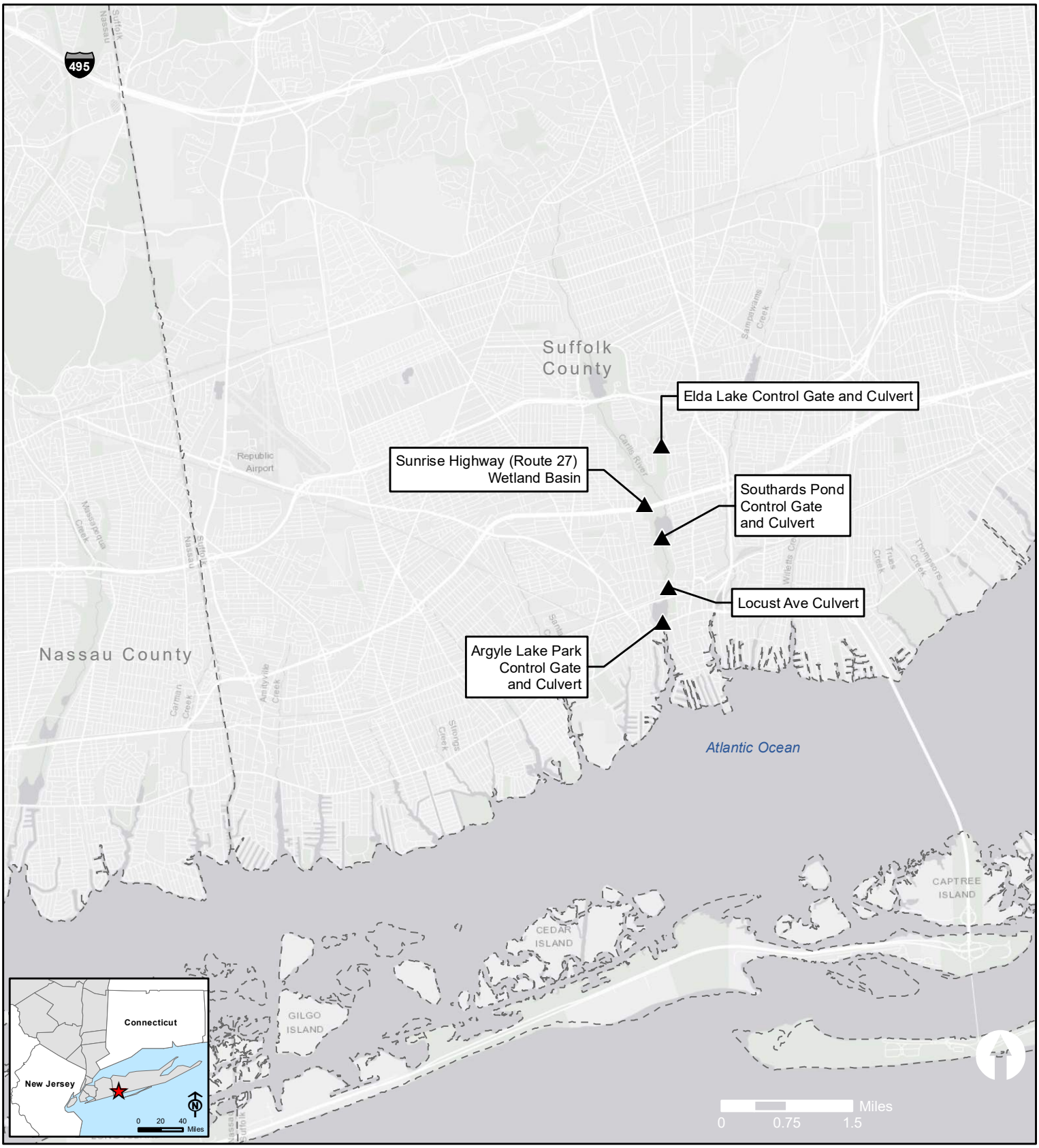

▲ Project Area

- - - County Boundary

Figure 1

Regional Location

Carlls River
Watershed Project

Source: ESRI World Light Gray Canvas Base

Louis Berger

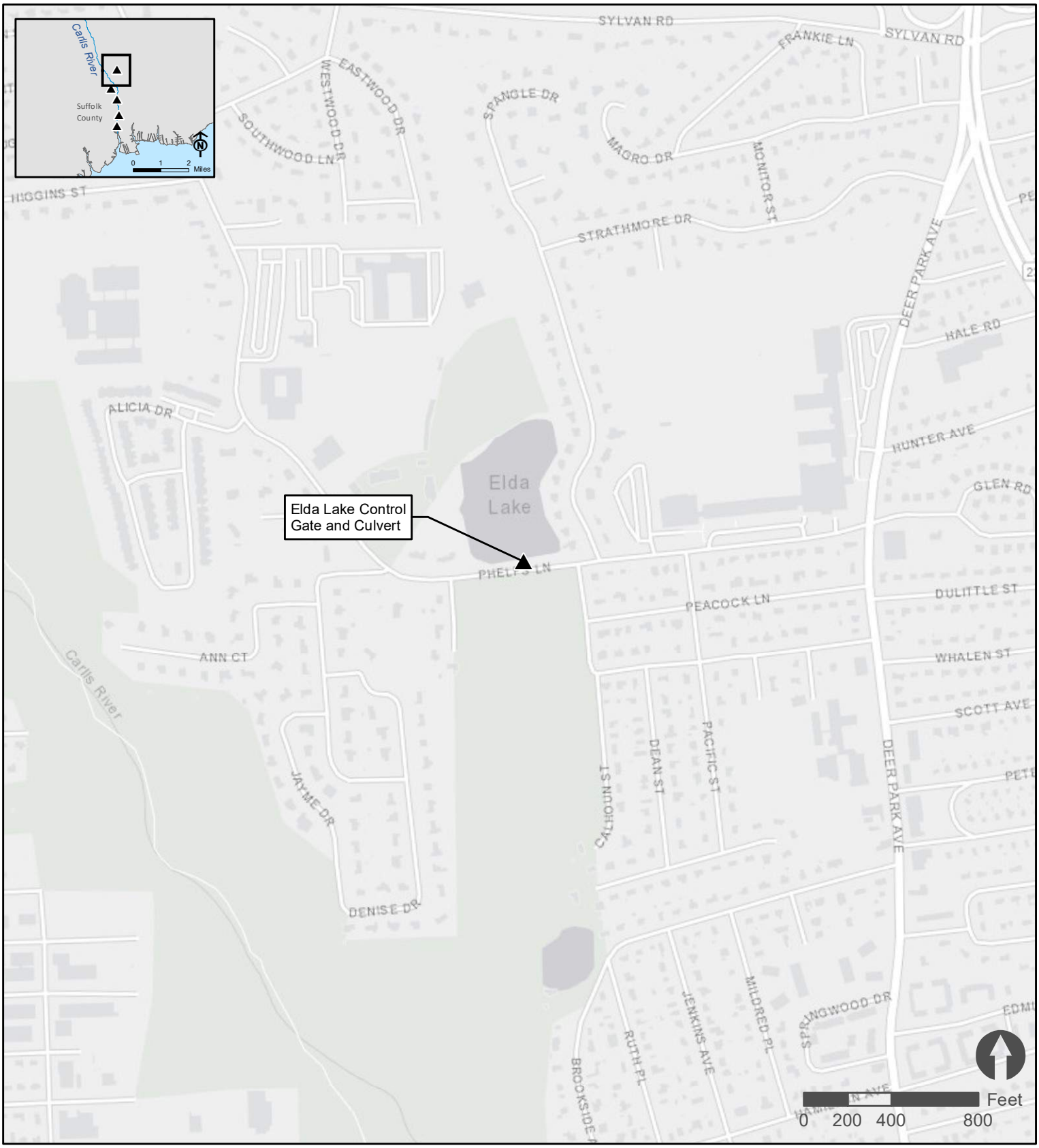

▲ Project Area

Figure 2a

Location of Projects

Carlls River
Watershed Project

Source: ESRI World Light Gray Canvas Base

Louis Berger

▲ Project Area

Figure 2b

Location of Projects

Carlls River
Watershed Project

Source: ESRI World Light Gray Canvas Base

Louis Berger

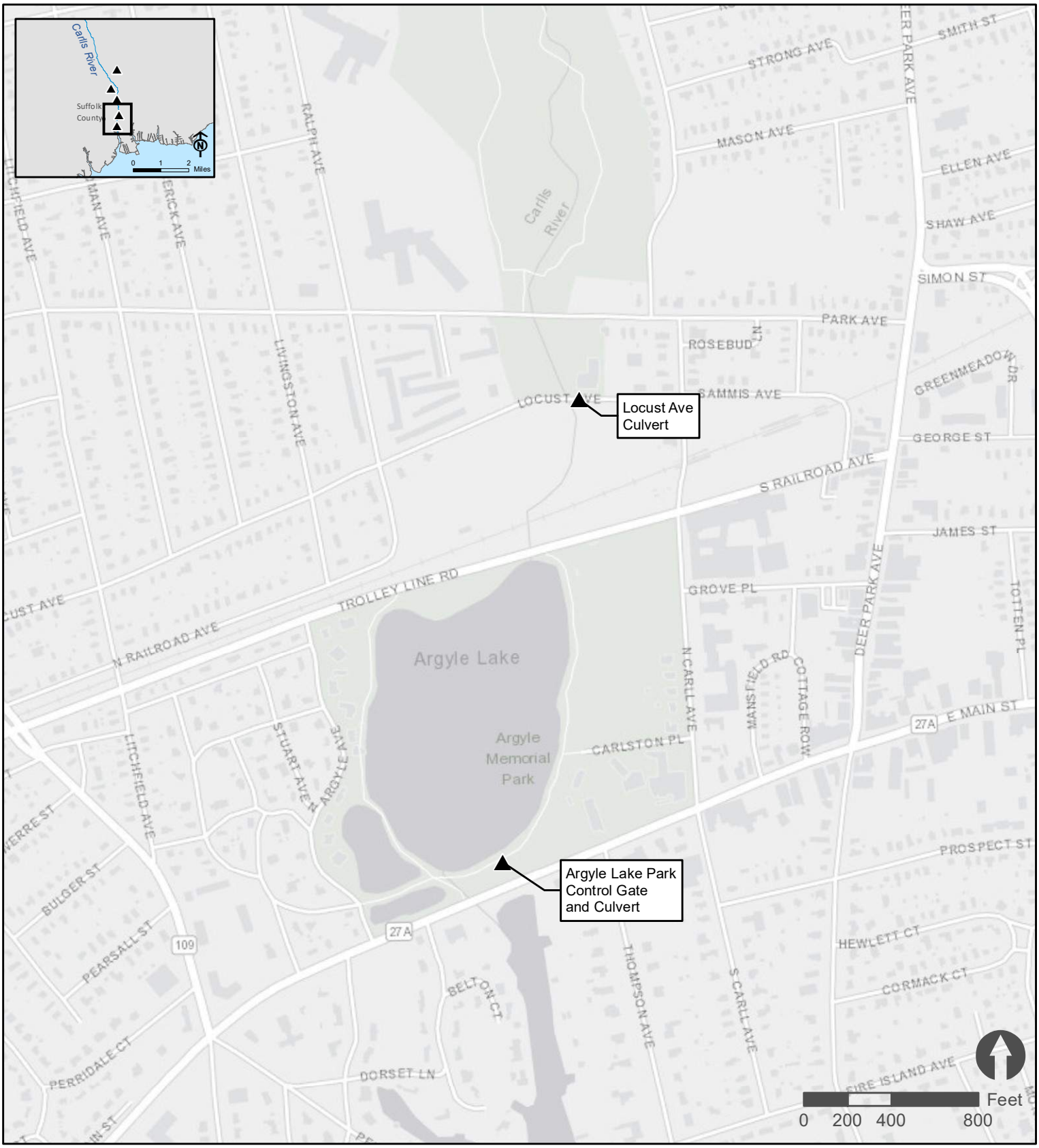

▲ Project Area

Figure 2c

Location of Projects

Carlls River
Watershed Project

Source: ESRI World Light Gray Canvas Base

Louis Berger

NEW YORK STATE DEPARTMENT OF ENVIRONMENTAL CONSERVATION

Division of Fish and Wildlife, New York Natural Heritage Program
625 Broadway, Fifth Floor, Albany, NY 12233-4757
P: (518) 402-8935 | F: (518) 402-8925
www.dec.ny.gov

November 7, 2018

Tara Stewart
Louis Berger
412 Mt. Kemble Avenue, P.O. Box 1946
Morristown, NJ 07962

Re: Carlls River Tributary/Watershed Project
County: Suffolk Town/City: Babylon

Dear Ms. Stewart:

In response to your recent request, we have reviewed the New York Natural Heritage Program database with respect to the above project.

Enclosed is a report of rare or state-listed animals and plants, and significant natural communities that our database indicates occur in the vicinity of the project site.

For most sites, comprehensive field surveys have not been conducted; the enclosed report only includes records from our database. We cannot provide a definitive statement as to the presence or absence of all rare or state-listed species or significant natural communities. Depending on the nature of the project and the conditions at the project site, further information from on-site surveys or other sources may be required to fully assess impacts on biological resources.

Our database is continually growing as records are added and updated. If this proposed project is still under development one year from now, we recommend that you contact us again so that we may update this response with the most current information.

The presence of the plants and animals identified in the enclosed report may result in this project requiring additional review or permit conditions. For further guidance, and for information regarding other permits that may be required under state law for regulated areas or activities (e.g., regulated wetlands), please contact the NYS DEC Region 1 Office, Division of Environmental Permits, as listed at dep.r1@dec.ny.gov.

Sincerely,

Nicholas Conrad
Information Resources Coordinator
New York Natural Heritage Program

1289

The following rare plants, rare animals, and significant natural communities have been documented at the project site, or in its vicinity.

We recommend that potential impacts of the proposed project on these species or communities be addressed as part of any environmental assessment or review conducted as part of the planning, permitting and approval process, such as reviews conducted under SEQR. Field surveys of the project site may be necessary to determine the status of a species at the site, particularly for sites that are currently undeveloped and may still contain suitable habitat. Final requirements of the project to avoid, minimize, or mitigate potential impacts are determined by the lead permitting agency or the government body approving the project.

The following animal, while not listed by New York State as Endangered or Threatened, is of conservation concern to the state, and is considered rare by the New York Natural Heritage Program.

COMMON NAME	*SCIENTIFIC NAME*	*NY STATE LISTING*	*HERITAGE CONSERVATION STATUS*
Birds			
Prothonotary Warbler *Breeding*	*Protonotaria citrea*	Protected Bird	Imperiled in NYS

Belmont, at or very near the project sites at Elda Lake, Sunrise Highway, and Southards Pond, and within 0.5 mile of the project sites at Locust Avenue and Argyle Lake, 2000-05: The birds were found at a riparian stream edge in a red maple-blackgum swamp. The understory vegetation includes sweet pepperbush and cinammon fern. 7785

The following natural community is considered significant from a statewide perspective by the NY Natural Heritage Program. It is either an example of a community type that is rare in the state, or a high-quality example of a more common community type. By meeting specific, documented criteria, the NY Natural Heritage Program considers this community occurrence to have high ecological and conservation value.

COMMON NAME	*SCIENTIFIC NAME*	*NY STATE LISTING*	*HERITAGE CONSERVATION STATUS*
Wetland/Aquatic Communities			
Red Maple-Blackgum Swamp			High-quality Occurrence of Rare Community Type

Belmont Lake, at or very near the project sites at Elda Lake, Sunrise Highway, and Southards Pond, and within 0.5 mile of the project sites at Locust Avenue and Argyle Lake: A forested swamp of large size with surprisingly few exotic species, located within a landscape that is surrounded by heavy development. Several bridges and culverts have been placed across the stream that flows through the swamp. 8164

The following plant is listed as Endangered by New York State, and is considered rare by the New York Natural Heritage Program, and so is a vulnerable natural resource of conservation concern.

COMMON NAME	*SCIENTIFIC NAME*	*NY STATE LISTING*	*HERITAGE CONSERVATION STATUS*
Vascular Plants			
Sweetbay Magnolia	*Magnolia virginiana var. virginiana*	Endangered	Critically Imperiled in NYS

Belmont Lake South, within 0.5 mile of the project sites at Elda Lake and Sunrise Highway, 2001-06-28: These trees are located within a red maple hardwood swamp on state park property that is surrounded by intense residential development. A narrow stream flows through the wooded sections of the state park. At the point where this stream divides and begins to expand into a large wooded swamp, the magnolia trees begin to appear. Some of the trees are located directly along the edge of a dirt trail. The trees are often multi-trunked and located on super-saturated soil. In most locations, the soil is firm and walkable. The area also seems like it may provide potential habitat for *Populus heterophylla*. 3770

This report only includes records from the NY Natural Heritage database. For most sites, comprehensive field surveys have not been conducted, and we cannot provide a definitive statement as to the presence or absence of all rare or state-listed species. Depending on the nature of the project and the conditions at the project site, further information from on-site surveys or other sources may be required to fully assess impacts on biological resources.

If any rare plants or animals are documented during site visits, we request that information on the observations be provided to the New York Natural Heritage Program so that we may update our database.

Information about many of the rare animals and plants in New York, including habitat, biology, identification, conservation, and management, are available online in Natural Heritage's Conservation Guides at www.guides.nynhp.org, from NatureServe Explorer at www.natureserve.org/explorer, and from USDA's Plants Database at http://plants.usda.gov/index.html (for plants).

Information about many of the natural community types in New York, including identification, dominant and characteristic vegetation, distribution, conservation, and management, is available online in Natural Heritage's Conservation Guides at www.guides.nynhp.org. For descriptions of all community types, go to www.dec.ny.gov/animals/97703.html for Ecological Communities of New York State.

Governor's Office of
Storm Recovery

ANDREW M. CUOMO
Governor

December 6, 2018

Mr. Steve Papa
U.S. Fish and Wildlife Service
Long Island Ecological Services Field Office
340 Smith Road
Shirley, NY 11967

Re: Section 7 Project Review - ESA/MBTA/BGEPA Consultation
Carlls River Tributary/Watershed Project, Town of Babylon, Suffolk County, New York
Consultation Code: 05E1LI00-2018-SLI-0907

Dear Mr. Papa:

The Town of Babylon is proposing the implementation of watershed improvements which would manage water flow in the Carlls River tributary watershed to avert flooding within the Village of Babylon and the Town of Babylon Hamlet of West Babylon. As part of the environmental review process, an Environmental Assessment of the proposed project is being prepared. The Governor's Office of Storm Recovery (GOSR) is the lead agency under the National Environmental Policy Act (NEPA) and State Environmental Quality Review Act (SEQRA) and related laws for the environmental review of the proposed Project. The proposed improvements would reduce flooding in communities adjacent to the river corridor as identified in the relevant Carlls River Tributary Watershed Project(s) from the Village of Babylon/West Babylon NYRCR Plan (March 2014). Additional objectives of the project are water quality protection and flood mitigation for the Carlls River Tributary Watershed.

The purpose of this letter is to provide the U.S. Fish and Wildlife Service – Long Island Ecological Services Field Office (USFWS) notice of the proposed project and to document compliance with Section 7 of the Endangered Species Act (ESA), as well as the Migratory Bird Treaty Act (MBTA) and the Bald and Golden Eagle Protection Act (BGEPA). As discussed below, we have reviewed the project and found that the proposed project does not jeopardize the continued existence of ESA species or destroy or adversely modify their critical habitat. This letter requests acknowledgement from the USFWS that they have received our determination regarding the subject project provided in this letter, and that USFWS has no objections to the determination.

1.0 PROPOSED ACTION

The Village of Babylon was particularly hard-hit by Superstorm Sandy. Structures located along the Great South Bay and along canals experienced the worst damage. Overall, 2,124 homes in the Village of Babylon were substantially damaged, and more than 50 percent were heavily damaged. This project would involve a range of ecological and infrastructure recovery activities that would address the community's resiliency to future storms and prevent the types of damages that resulted from Superstorm Sandy.

The Carlls River is the fourth largest river system on Long Island. The river begins in Dix Hills, Wheatley Heights, Deer Park and Wyandanch, and ends down river in North Babylon and the Village of Babylon with the river delta, including Fosters Creek, leading to Great South Bay. The Carlls River watershed itself encompasses more than 15 square miles.

This multicomponent project (the Proposed Action) would allow water levels within this watershed to be adjusted by means of dams, floodgates, and new stormwater retention wetland areas to increase flood protection and reduce the exposure of major assets and residential areas to severe flooding and flood damage. Following a hydrologic and hydraulic analyses performed in 2016 as part of a comprehensive watershed engineering study, several projects were identified based on ease of implementation/constructability, overall effectiveness in addressing water quality or flood control for the watershed, and stakeholder input. The five specific components of the Proposed Action are located at various points within the watershed area (see **Attachment 1**) and are listed below:

1. **Sunrise Highway**

    - Construct a stormwater wetland basin
    - Approximately 1.3 acres of vegetation would be cleared to create the stormwater wetland. Trees to be removed range from 6" diameter at breast height (DBH) to 24" DBH.

2. **Elda Lake**

    - Install new control gate;
    - Operate gate prior to major anticipated storms to provide pre-emptive lowering;
    - Construct a new primary spillway culvert; install a fish ladder;
    - 15 trees would be removed, ranging from 4" DBH to 24" DBH.

3. **Southards Pond**

    - Install new control gate; operate gate prior to major anticipated storms to provide pre-emptive lowering;
    - Replace two arch side relief culverts wit new, larger relief culvert;
    - Install natural fish passage channel (preferred over fish ladder due to ecological benefits);
    - No tree removal is anticipated for this component.

4. **Argyle Lake**

    - Install new control gate;
    - Operate gate prior to major anticipated storms to provide pre-emptive lowering;
    - Replace existing relief culvert with larger structure;
    - One 16" DBH tree would be removed at this location.

5. **Locust Avenue**

    - Replace existing 13' wide culvert with new 26' wide culvert;
    - One 20" DBH tree would be removed at this location.

This multi-phase infrastructure project would significantly reduce flood risk to residential areas, commercial assets, major and secondary transportation corridors and LIRR infrastructure and protect park and open space assets. Enhanced flood protection is expected to reduce the vulnerability of residential areas within extreme and high flood-risk areas. The Proposed Action would also reduce vulnerability of secondary roads in the extreme risk areas, as well as Argyle Lake Park. The resulting preservation and enhancement of the watershed would reduce risk throughout much of the community. Major beneficiaries of the Proposed Action include the population of target areas within the Village of Babylon.

2.0 ENDANGERED SPECIES ACT

The USFWS, Long Island Ecological Services Field Office was contacted through the Information, Planning, and Conservation System (IPaC) regarding the potential presence of species under the jurisdiction of the USFWS within the project areas of the Proposed Action. The IPaC Trust Resources Report is included as **Attachment 2**, and the USFWS Official Species List is included as **Attachment 3**. USFWS indicates that six threatened and endangered species may occur within the project areas: *Myotis septentrionalis* (northern long-eared bat – threatened); *Charadrius melodus* (piping plover – threatened); *Calidris canutus rufa* (red knot - threatened); *Sterna dougallii dougallii* (roseate tern – endangered); *Agalinis acuta* (sandplain geradia – endangered); and *Amaranthus pumilus* (seabeach amaranth – threatened). There are no critical habitats for these or any other species within the vicinity of the Proposed Action.

A request for species records within the project areas was sent to the New York State Natural Heritage Program (NYSNHP). A response was received on November 7, 2018 (included as **Attachment 4**) indicating that there are no records of federally protected species in the vicinity of the project areas.

A description of each federally endangered or threatened species identified by USFWS, and the likelihood that the species occurs within the project area, is provided below. Species' descriptions are summarized from New York State Department of Environmental Conservation (NYSDEC) fact sheets[i] and USFWS species profiles[ii] unless otherwise referenced.

3.1 Northern long-eared bat

The northern long-eared bat is a medium-sized bat that is distinguished by its long ears, particularly as compared to other bats in its genus. The northern long-eared bat is found across much of the eastern and north central United States. White-nose syndrome is the predominant threat to this bat, especially throughout the northeast where the species has declined by up to 99 percent from pre-white-nose syndrome levels at many hibernation sites. During summer, northern long-eared bats roost singly or in colonies underneath bark, in cavities, or in crevices of both live and dead trees, using tree species based on suitability to retain bark or provide cavities or crevices. They emerge at dusk to fly through the understory of forested hillsides and ridges feeding on moths, flies, leafhoppers, caddisflies, and beetles or by gleaning insects from vegetation and water surfaces. Northern long-eared bats spend winter hibernating in caves and mines.

The Proposed Action would involve approximately 1.3 acres of tree removal within the range of potential occurrence of northern long-eared bat. However, the Proposed Action is not located within the vicinity of known or assumed NLEB hibernacula or maternity roosts. Approximately 1.3 acres of wooded habitat would be cleared within the Sunrise Highway project area to create a stormwater wetland. The remaining components require no to minimal tree removal: fifteen trees would be removed at Elda Lake; one tree would be removed at each of the Argyle Lake and Locust Avenue project areas; and no tree removal is required at Southards Pond. Due to a seasonal restriction by NYSDEC, for trout, that requires no work occur between October 1 and March 31, tree removal during the active bat season cannot be avoided. The Town of Babylon would coordinate with USFWS for onsite monitoring during tree removal to ensure that northern long-eared bats are not impacted. Tree removal would be minimized in the design to the greatest extent practicable, and trees to be protected from cutting would be clearly demarcated to prevent unnecessary clearing.

Forested habitat contiguous with the Sunrise Highway project area and the other project components would remain undisturbed. The proposed loss of approximately 1.3 acres of wooded area would not significantly affect northern long-eared bat as over three hundred acres of adjacent suitable, undisturbed forested habitat along the corridor of Carlls River and within Belmont Lake State Park would remain available. Additionally, onsite monitoring during tree removal and avoidance of any unnecessary tree clearing would minimize potential impacts to northern long-eared bat. GOSR determines that the Proposed Action may affect but is not likely to adversely affect northern long-eared bat. Included as **Attachment 5** is a northern long-eared bat 4(d) rule streamlined consultation form for the Proposed Project pursuant to USFWS's January 5, 2016, Intra-Service Programmatic Biological Opinion on the final 4(d) rule for the northern long-eared bat.

3.2 Piping plover

The piping plover is a small shorebird that is listed as federally threatened and state endangered. Habitat is only found at the shore, on barrier islands, sandy beaches, and dredged material disposal islands. The piping plover diet consists principally of marine worms, insect larvae, beetles, crustaceans, and mollusks and is obtained by foraging on beaches, dunes, and in tidal wrack. In New York, this species breeds on Long Island's sandy beaches, from Queens to the Hamptons, in the eastern bays and in the harbors of northern Suffolk County. Piping plovers arrive to the New York area in early to mid-March and establish nesting territories by early April. Nests are usually placed well above the high tide line on open sandy beaches or in areas that have been filled with dredged sand, often near dunes in areas with little or no beach grass. By early September, most have departed for their wintering areas.

Suitable sandy beach habitat for piping plover is not present within the immediate vicinity of any of the project areas. The Proposed Action is considered to have no effect on piping plover or the habitats on which it depends.

3.3 Red knot

The red knot is a large, bulky sandpiper that is listed as federally threatened. Red knots feed on invertebrates, especially small clams, mussels, and snails, but also crustaceans, marine worms, and horseshoe crab eggs. The red knot can fly more than 9,300 miles from south to north every spring and repeat the trip in reverse every autumn, making this bird one of the longest-distance migrants in the animal kingdom. Red knots need to encounter favorable habitat, food, and weather conditions within narrow seasonal windows because the birds stopover between wintering and breeding areas. Habitat in the northeastern U.S. includes Atlantic and bay beaches and mudflats.

Suitable ocean/bay beach habitat for red knot is not present within the immediate vicinity of the project areas. The Proposed Action is considered to have no effect on red knot or the habitats on which it depends.

3.4 Roseate tern

The roseate tern is a waterbird listed as federally and state endangered. Foraging habitat includes shallow coastal waters, inlets, and offshore seas. Roseate terns feed primarily on the American sand lance, a small marine fish. In the northeastern U.S., roseate tern nest on beaches, barrier islands, and offshore islands. Open sandy beaches isolated from human activity are its optimal nesting habitat. In New York, this species breeds only at a few Long Island colonies and is always found nesting with common terns. Roseate terns arrive on the breeding grounds in late April or early May and begin nesting one month later. The nest is usually placed in dense grass clumps or even under boulders or rip-rap, and may be only a depression in sand, shell, or gravel and may be lined with bits of grass and other debris. Migration to wintering grounds begins in late summer.

There is no suitable nesting or foraging habitat for roseate tern within the immediate vicinity of the project areas. The Proposed Action is considered to have no effect on roseate tern or the habitats on which it depends.

3.5 Sandplain gerardia

The only Federally Endangered plant species in New York State, sandplain gerardia is a small annual plant with delicate pink blossoms. Six of the twelve known natural populations in the world can be found in coastal grassland areas on Long Island. It now survives in remnant grasslands in pine barrens with broad, grassy swaths; remnants of the Hempstead Plains dominated by grasses and composites with scattered shrubs and bare areas scraped by a bulldozer; and other remnant grasslands of the South Fork including those around golf courses, and along roadsides and railroads.

Suitable habitat for sandplain gerardia is not present within the vicinity of the project areas, as it only occurs in coastal grasslands. The Proposed Action is considered to have no effect on sandplain gerardia or the habitats on which it depends.

3.6 Seabeach amaranth

Seabeach amaranth is an annual plant that is listed as federally endangered and state threatened. The plant grows on a nearly pure sand substrate above the high tide line and is intolerant of even occasional flooding during its growing season. The habitat of seabeach amaranth is sparsely vegetated with annual herbs and, less commonly, perennial herbs, and

scattered shrubs. The plant does not compete well in areas of established growth but will potentially stabilize in disturbed areas. Flowering and seed production usually start in July and continue until the plants die in the fall. It is only known from Long Island, ranging from Coney Island to near the east end of the South Fork along the southern shore[iii].

Suitable habitat for seabeach amaranth is not present within the vicinity of the project areas, as it only occurs in the upper beach zone above the high tide line. The Proposed Action is considered to have no effect on seabeach amaranth or the habitats on which it depends.

3.0 MIGRATORY BIRD TREATY ACT

The Proposed Action would take place within the Atlantic Flyway. The IPaC Trust Resources Report (**Attachment 2**) indicates that there are 26 species of migratory birds that are protected by the Migratory Bird Treaty Act that could potentially be affected by the Proposed Action. Tree removal associated with the Proposed Action would result in the permanent loss forest habitat for migratory birds. The proposed loss of approximately 1.3 acres of forested area would not significantly affect migratory birds as over three hundred acres of adjacent suitable, undisturbed forested habitat along the corridor of Carlls River and within Belmont Lake State Park would remain available. It is expected that any migratory birds that may be present in the area would leave the project areas during construction activity. GOSR has determined that the Proposed Action is not likely to adversely affect migratory birds.

4.0 THE BALD AND GOLDEN EAGLE PROTECTION ACT

Haliaeetus leucocephalus (bald eagle) habitat and breeding sites are found throughout Suffolk County. There are no documented breeding bald eagles within the vicinity of the project areas; therefore, no adverse impacts to breeding bald eagles are expected as a result of the project. As with other migratory birds, foraging bald eagles may temporarily avoid the project areas during construction due to noise and disturbance. The proposed loss of approximately 1.3 acres of wooded area would not significantly affect foraging bald eagle as over three hundred acres of adjacent suitable, undisturbed foraging habitat along the corridor of Carlls River and within Belmont Lake State Park would remain available. Additionally, the approximately 1.3 acres of forested area that would be cleared in not located along a shoreline, which is the preferred foraging habitat for bald eagle. GOSR has determined that the Proposed Action is not likely to adversely affect bald eagle.

5.0 CONCLUSION

According to the USFWS IPaC Trust Resource Report and Official Species List of threatened and endangered species, there are six listed species that may potentially occur with the project area (northern long-eared bat, piping plover, red knot, roseate tern, sandplain gerardia, and seabeach amaranth) and there are 26 migratory birds of concern that could potentially be affected by the Proposed Action. There is no critical habitat designated within the vicinity of the project areas.

Suitable habitat for piping plover, red knot, roseate tern, sandplain gerardia, and seabeach amaranth is not present within the immediate vicinity of any of the Proposed Action. Piping plover, red knot, and roseate tern are known to occur in the region during the spring and summer, utilizing coastal beaches and waters, but the immediate vicinity of the five component project areas do not contain suitable foraging or breeding habitat. The project areas do not contain coastal grassland habitat for sandplain gerardia or upper beach zone habitat for seabeach amaranth. Therefore, the Proposed Action woudl have no effect on piping plover, red knot, roseate tern, sandplain gerardia, or seabeach amaranth.

The Proposed Action would take place within the range of potential occurrence of northern long-eared bat; however, the Proposed Action is not located within the vicinity of known or assumed NLEB hibernacula or maternity roosts. The Town of Babylon would coordinate with USFWS for onsite monitoring during to ensure that northern long-eared bats are not impacted during construction. Over three hundred acres of adjacent suitable, undisturbed forested habitat along the corridor of Carlls River and within Belmont Lake State Park would remain available to northern long-eared bat and

migratory birds. The proposed tree removal is not likely to adversely affect northern long-eared bat or migratory birds, including bald eagle. There are no known bald eagle nests within the vicinity of the project areas; therefore, the Proposed Action should have no effect on breeding bald eagle.

Project implementation is conditioned upon issuance of applicable federal and state permits and would be constructed in accordance with federal and state permit conditions. For purposes of consultation under Section 7(a)(2) of the ESA, GOSR has determined that the Proposed Action would have no effect on piping plover, red knot, roseate tern, sandplain gerardia, or seabeach amaranth, and is not likely to adversely affect northern long-eared bat. Additionally, the Proposed Action is not likely to adversely affect migratory birds or bald eagle. This letter requests acknowledgement from USFWS that they have no objections to this determination.

If you have any questions, please feel free to contact me at (646) 256-9485 or james.mcallister@stormrecovery.ny.gov. Thank you for your consideration and cooperation.

Sincerely,

James McAllister
Senior Environmental Project Manager
Bureau of Environmental Review and Assessment
Governor's Office of Storm Recovery
25 Beaver Street, 5th Floor, New York, New York 10004

Attachments:
1) Figures (Regional and Local Project Locations)
2) USFWS IPaC Trust Resources Report
3) USFWS Official Species List
4) NYSNHP Response Letter
5) Northern Long-Eared Bat 4(d) Rule Streamlined Consultation Form

[i] http://www.dec.ny.gov/animals/7494.html; http://acris.nynhp.org/animals.php
[ii] http://ecos.fws.gov/ecp/
[iii] NYSDEC Natural Heritage Program. Plant Guides.

ATTACHMENTS

ATTACHMENT 1

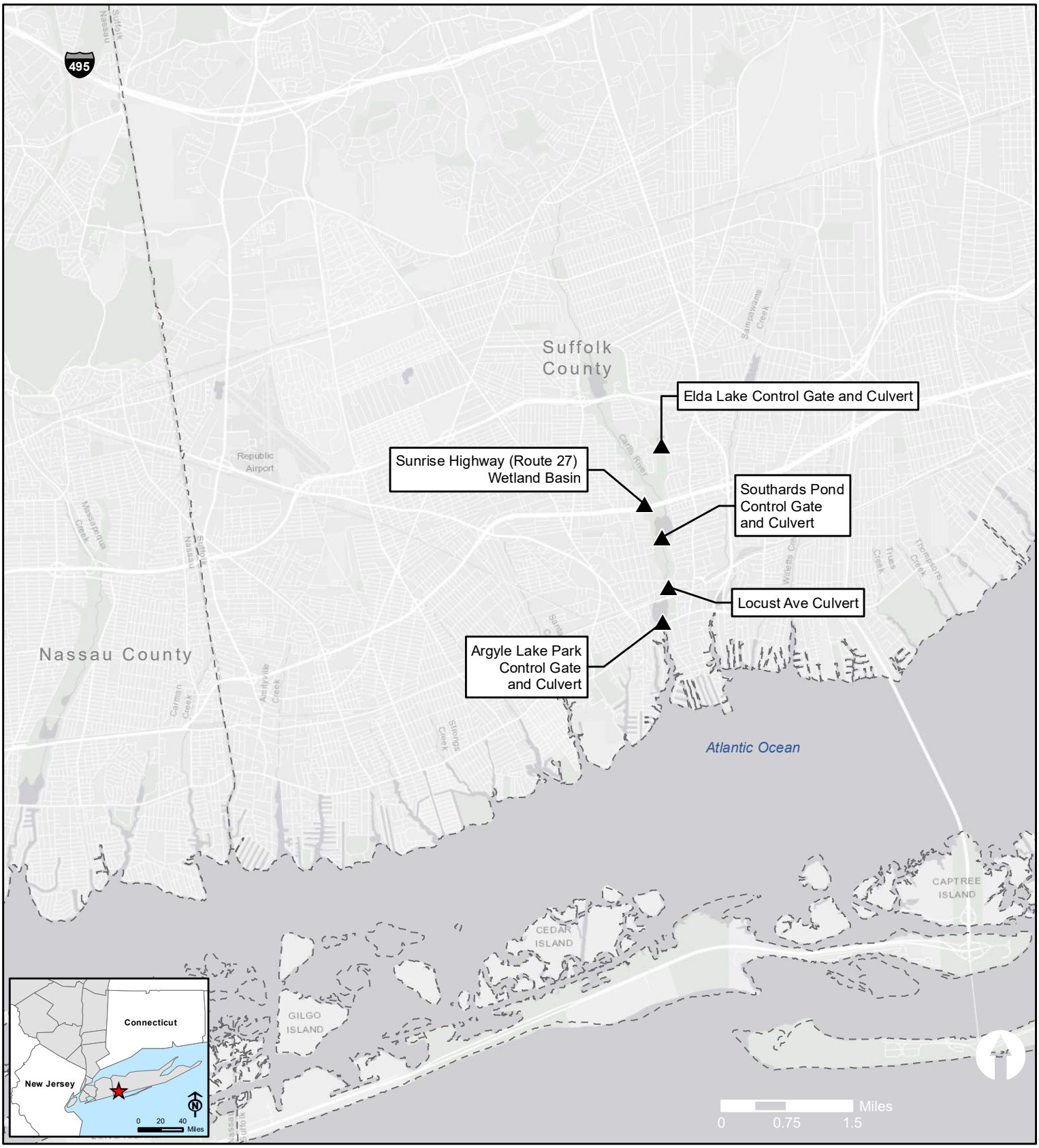

▲ Project Area

- - - County Boundary

Figure 1

Regional Location

Carlls River
Watershed Project

Source: ESRI World Light Gray Canvas Base

Louis Berger

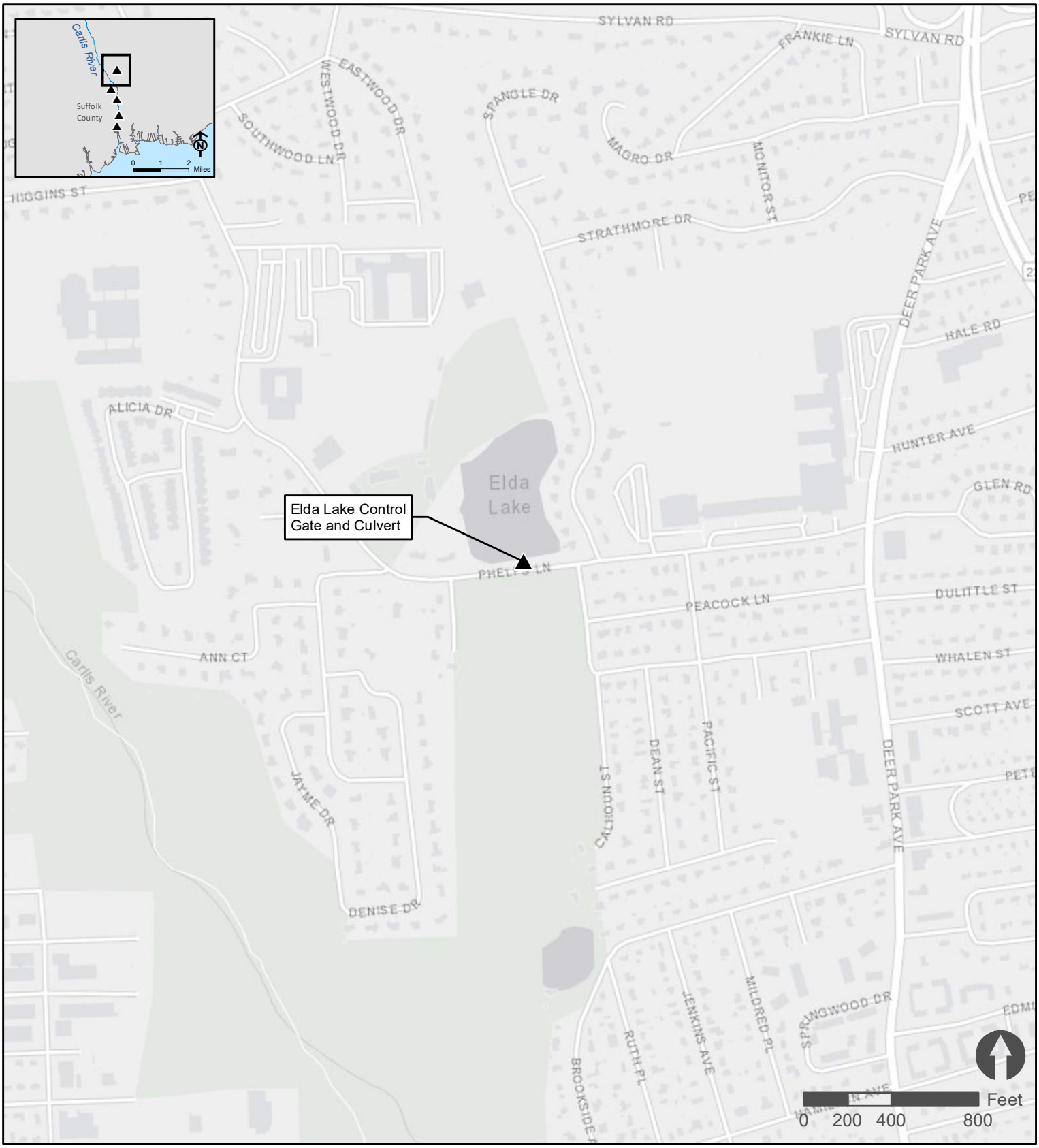

▲ Project Area

Figure 2a

Location of Projects

Carlls River
Watershed Project

Source: ESRI World Light Gray Canvas Base

Louis Berger

▲ Project Area

Figure 2b

Location of Projects

Carlls River
Watershed Project

Source: ESRI World Light Gray Canvas Base

Louis Berger

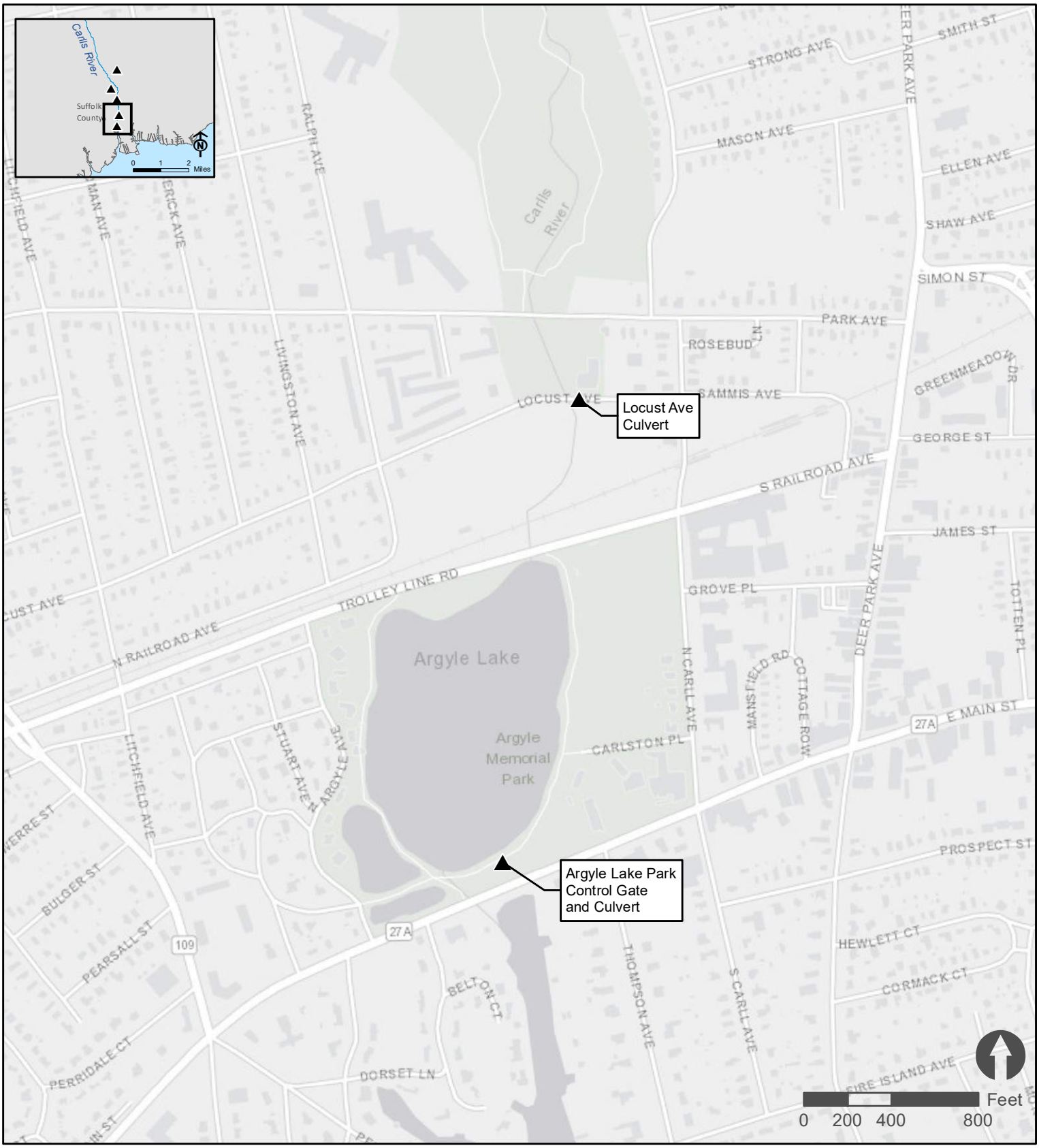

▲ Project Area

Figure 2c

Location of Projects

Carlls River
Watershed Project

Source: ESRI World Light Gray Canvas Base

Louis Berger

ATTACHMENT 2

Last login September 12, 2018 11:51 AM MDT

IPaC resource list

This report is an automatically generated list of species and other resources such as critical habitat (collectively referred to as *trust resources*) under the U.S. Fish and Wildlife Service's (USFWS) jurisdiction that are known or expected to be on or near the project area referenced below. The list may also include trust resources that occur outside of the project area, but that could potentially be directly or indirectly affected by activities in the project area. However, determining the likelihood and extent of effects a project may have on trust resources typically requires gathering additional site-specific (e.g., vegetation/species surveys) and project-specific (e.g., magnitude and timing of proposed activities) information.

Below is a summary of the project information you provided and contact information for the USFWS office(s) with jurisdiction in the defined project area. Please read the introduction to each section that follows (Endangered Species, Migratory Birds, USFWS Facilities, and NWI Wetlands) for additional information applicable to the trust resources addressed in that section.

NOT FOR CONSULTATION

Project information

NAME

Carlls River Tributary/Watershed Project, Village of Babylon, West Babylon

LOCATION

Suffolk County, New York

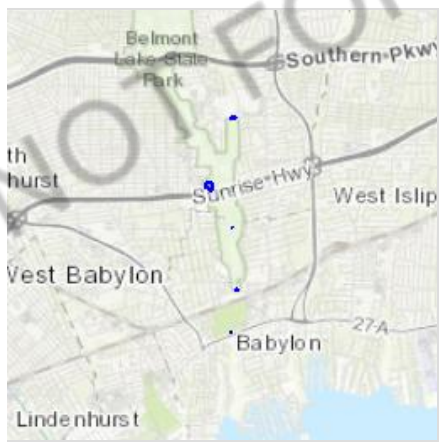

DESCRIPTION

The
Town of Babylon is requesting funding for the implementation of watershed improvements which would manage water flow in the Carlls River tributary watershed to avert flooding within the Village of Babylon and the Town of Babylon Hamlet of West Babylon. This multicomponent project would allow water levels within this watershed to be adjusted by means of dams, floodgates, and new stormwater retention wetland areas to increase flood protection and reduce

the exposure of major assets and residential areas to severe flooding and flood damage. Following a hydrologic and hydraulic analyses performed in 2016 as part of a comprehensive watershed engineering study, several projects were identified based on ease of implementation/constructability, overall effectiveness in addressing water quality or flood control for the watershed, and stakeholder input. The five specific projects are located at various points within the watershed area and are listed below: • Sunrise Highway - Construct a stormwater wetland basin • Elda Lake - Install new control gate; operate gate prior to major anticipated storms to provide pre-emptive lowering; construct a new primary spillway culvert; install a fish ladder • Southards Pond - Install new control gate; operate gate prior to major anticipated storms to provide pre-emptive lowering; replace two arch side relief culverts wit new, larger relief culvert; install natural fish passage channel (preferred over fish ladder due to ecological benefits • Argyle Lake - Install new control gate; operate gate prior to major anticipated storms to provide pre-emptive lowering; replace existing relief culvert with larger structure • Locust Avenue - replace existing 13' wide culvert with new 26' wide culvert This multi-phase infrastructure project would significantly reduce flood risk to residential areas, commercial assets, major and secondary transportation corridors and LIRR infrastructure and protect park and open space assets. Enhanced flood protection is expected to reduce the vulnerability of residential areas within extreme and high flood-risk areas. The project also will reduce vulnerability of secondary roads in the extreme risk areas, as well as Argyle Lake Park. The resulting preservation and enhancement of the watershed would reduce risk throughout much of the community. Major beneficiaries of the project include the population of target areas within the Village of Babylon.

Local office

Long Island Ecological Services Field Office

(631) 286-0485
(631) 286-4003

340 Smith Road
Shirley, NY 11967-2258

NOT FOR CONSULTATION

Endangered species

This resource list is for informational purposes only and does not constitute an analysis of project level impacts.

The primary information used to generate this list is the known or expected range of each species. Additional areas of influence (AOI) for species are also considered. An AOI includes areas outside of the species range if the species could be indirectly affected by activities in that area (e.g., placing a dam upstream of a fish population, even if that fish does not occur at the dam site, may indirectly impact the species by reducing or eliminating water flow downstream). Because species can move, and site conditions can change, the species on this list are not guaranteed to be found on or near the project area. To fully determine any potential effects to species, additional site-specific and project-specific information is often required.

Section 7 of the Endangered Species Act **requires** Federal agencies to "request of the Secretary information whether any species which is listed or proposed to be listed may be present in the area of such proposed action" for any project that is conducted, permitted, funded, or licensed by any Federal agency. A letter from the local office and a species list which fulfills this requirement can **only** be obtained by requesting an official species list from either the Regulatory Review section in IPaC (see directions below) or from the local field office directly.

For project evaluations that require USFWS concurrence/review, please return to the IPaC website and request an official species list by doing the following:

1. Log in to IPaC.
2. Go to your My Projects list.
3. Click PROJECT HOME for this project.
4. Click REQUEST SPECIES LIST.

Listed species

[1] and their critical habitats are managed by the Ecological Services Program of the U.S. Fish and Wildlife Service (USFWS) and the fisheries division of the National Oceanic and Atmospheric Administration (NOAA Fisheries[2]).

Species and critical habitats under the sole responsibility of NOAA Fisheries are **not** shown on this list. Please contact NOAA Fisheries for species under their jurisdiction.

---

1. Species listed under the Endangered Species Act are threatened or endangered; IPaC also shows species that are candidates, or proposed, for listing. See the listing status page for more information.
2. NOAA Fisheries, also known as the National Marine Fisheries Service (NMFS), is an office of the National Oceanic and Atmospheric Administration within the Department of Commerce.

The following species are potentially affected by activities in this location:

NOT FOR CONSULTATION

Mammals

NAME	STATUS
Northern Long-eared Bat Myotis septentrionalis No critical habitat has been designated for this species. https://ecos.fws.gov/ecp/species/9045	Threatened

Birds

NAME	STATUS
Piping Plover Charadrius melodus There is **final** critical habitat for this species. Your location is outside the critical habitat. https://ecos.fws.gov/ecp/species/6039	Threatened
Red Knot Calidris canutus rufa No critical habitat has been designated for this species. https://ecos.fws.gov/ecp/species/1864	Threatened
Roseate Tern Sterna dougallii dougallii No critical habitat has been designated for this species. https://ecos.fws.gov/ecp/species/2083	Endangered

Flowering Plants

NAME	STATUS
Sandplain Gerardia Agalinis acuta No critical habitat has been designated for this species. https://ecos.fws.gov/ecp/species/8128	Endangered
Seabeach Amaranth Amaranthus pumilus No critical habitat has been designated for this species. https://ecos.fws.gov/ecp/species/8549	Threatened

NOT FOR CONSULTATION

Critical habitats

Potential effects to critical habitat(s) in this location must be analyzed along with the endangered species themselves.

THERE ARE NO CRITICAL HABITATS AT THIS LOCATION.

Migratory birds

Certain birds are protected under the Migratory Bird Treaty Act

[1] and the Bald and Golden Eagle Protection Act[2].

Any person or organization who plans or conducts activities that may result in impacts to migratory birds, eagles, and their habitats should follow appropriate regulations and consider implementing appropriate conservation measures, as described below.

---

1. The Migratory Birds Treaty Act of 1918.
2. The Bald and Golden Eagle Protection Act of 1940.

Additional information can be found using the following links:

- Birds of Conservation Concern http://www.fws.gov/birds/management/managed-species/birds-of-conservation-concern.php
- Measures for avoiding and minimizing impacts to birds http://www.fws.gov/birds/management/project-assessment-tools-and-guidance/conservation-measures.php
- Nationwide conservation measures for birds

The birds listed below are birds of particular concern either because they occur on the USFWS Birds of Conservation Concern (BCC) list or warrant special attention in your project location. To learn more about the levels of concern for birds on your list and how this list is generated, see the FAQ below. This is not a list of every bird you may find in this location, nor a guarantee that every bird on this list will be found in your project area. To see exact locations of where birders and the general public have sighted birds in and around your project area, visit the E-bird data mapping tool (Tip: enter your location, desired date range and a species on your list). For projects that occur off the Atlantic Coast, additional maps and models detailing the relative occurrence and abundance of bird species on your list are available. Links to additional information about Atlantic Coast birds, and other important information about your migratory bird list, including how to properly interpret and use your migratory bird report, can be found below.

For guidance on when to schedule activities or implement avoidance and minimization measures to reduce impacts to migratory birds on your list, click on the PROBABILITY OF PRESENCE SUMMARY at the top of your list to see when these birds are most likely to be present and breeding in your project area.

NOT FOR CONSULTATION

NAME	BREEDING SEASON (IF A BREEDING SEASON IS INDICATED FOR A BIRD ON YOUR LIST, THE BIRD MAY BREED IN YOUR PROJECT AREA SOMETIME WITHIN THE TIMEFRAME SPECIFIED, WHICH IS A VERY LIBERAL ESTIMATE OF THE DATES INSIDE WHICH THE BIRD BREEDS ACROSS ITS ENTIRE RANGE. "BREEDS ELSEWHERE" INDICATES THAT THE BIRD DOES NOT LIKELY BREED IN YOUR PROJECT AREA.)
American Oystercatcher Haematopus palliatus This is a Bird of Conservation Concern (BCC) throughout its range in the continental USA and Alaska. https://ecos.fws.gov/ecp/species/8935	Breeds Apr 15 to Aug 31
Bald Eagle Haliaeetus leucocephalus This is not a Bird of Conservation Concern (BCC) in this area, but warrants attention because of the Eagle Act or for potential susceptibilities in offshore areas from certain types of development or activities. https://ecos.fws.gov/ecp/species/1626	Breeds Oct 15 to Aug 31
Black Skimmer Rynchops niger This is a Bird of Conservation Concern (BCC) throughout its range in the continental USA and Alaska. https://ecos.fws.gov/ecp/species/5234	Breeds May 20 to Sep 15
Black-billed Cuckoo Coccyzus erythropthalmus This is a Bird of Conservation Concern (BCC) throughout its range in the continental USA and Alaska. https://ecos.fws.gov/ecp/species/9399	Breeds May 15 to Oct 10
Bobolink Dolichonyx oryzivorus This is a Bird of Conservation Concern (BCC) throughout its range in the continental USA and Alaska.	Breeds May 20 to Jul 31
Canada Warbler Cardellina canadensis This is a Bird of Conservation Concern (BCC) throughout its range in the continental USA and Alaska.	Breeds May 20 to Aug 10
Clapper Rail Rallus crepitans This is a Bird of Conservation Concern (BCC) only in particular Bird Conservation Regions (BCRs) in the continental USA	Breeds Apr 10 to Oct 31

NOT FOR CONSULTATION

Dunlin Calidris alpina arcticola — Breeds elsewhere

This is a Bird of Conservation Concern (BCC) only in particular Bird Conservation Regions (BCRs) in the continental USA

Golden-winged Warbler Vermivora chrysoptera — Breeds May 1 to Jul 20

This is a Bird of Conservation Concern (BCC) throughout its range in the continental USA and Alaska.
https://ecos.fws.gov/ecp/species/8745

Gull-billed Tern Gelochelidon nilotica — Breeds May 1 to Jul 31

This is a Bird of Conservation Concern (BCC) throughout its range in the continental USA and Alaska.
https://ecos.fws.gov/ecp/species/9501

Kentucky Warbler Oporornis formosus — Breeds Apr 20 to Aug 20

This is a Bird of Conservation Concern (BCC) throughout its range in the continental USA and Alaska.

Least Tern Sterna antillarum — Breeds Apr 20 to Sep 10

This is a Bird of Conservation Concern (BCC) only in particular Bird Conservation Regions (BCRs) in the continental USA

Lesser Yellowlegs Tringa flavipes — Breeds elsewhere

This is a Bird of Conservation Concern (BCC) throughout its range in the continental USA and Alaska.
https://ecos.fws.gov/ecp/species/9679

Nelson's Sparrow Ammodramus nelsoni — Breeds May 15 to Sep 5

This is a Bird of Conservation Concern (BCC) throughout its range in the continental USA and Alaska.

Prairie Warbler Dendroica discolor — Breeds May 1 to Jul 31

This is a Bird of Conservation Concern (BCC) throughout its range in the continental USA and Alaska.

Prothonotary Warbler Protonotaria citrea — Breeds Apr 1 to Jul 31

This is a Bird of Conservation Concern (BCC) throughout its range in the continental USA and Alaska.

Red-throated Loon Gavia stellata — Breeds elsewhere

This is a Bird of Conservation Concern (BCC) throughout its range in the continental USA and Alaska.

Ruddy Turnstone Arenaria interpres morinella — Breeds elsewhere

This is a Bird of Conservation Concern (BCC) only in particular Bird Conservation Regions (BCRs) in the continental USA

NOT FOR CONSULTATION

Rusty Blackbird Euphagus carolinus This is a Bird of Conservation Concern (BCC) throughout its range in the continental USA and Alaska.	Breeds elsewhere
Saltmarsh Sparrow Ammodramus caudacutus This is a Bird of Conservation Concern (BCC) throughout its range in the continental USA and Alaska.	Breeds May 15 to Sep 5
Seaside Sparrow Ammodramus maritimus This is a Bird of Conservation Concern (BCC) throughout its range in the continental USA and Alaska.	Breeds May 10 to Aug 20
Semipalmated Sandpiper Calidris pusilla This is a Bird of Conservation Concern (BCC) throughout its range in the continental USA and Alaska.	Breeds elsewhere
Short-billed Dowitcher Limnodromus griseus This is a Bird of Conservation Concern (BCC) throughout its range in the continental USA and Alaska. https://ecos.fws.gov/ecp/species/9480	Breeds elsewhere
Whimbrel Numenius phaeopus This is a Bird of Conservation Concern (BCC) throughout its range in the continental USA and Alaska. https://ecos.fws.gov/ecp/species/9483	Breeds elsewhere
Willet Tringa semipalmata This is a Bird of Conservation Concern (BCC) throughout its range in the continental USA and Alaska.	Breeds Apr 20 to Aug 5
Wood Thrush Hylocichla mustelina This is a Bird of Conservation Concern (BCC) throughout its range in the continental USA and Alaska.	Breeds May 10 to Aug 31

NOT FOR CONSULTATION

Tell me more about conservation measures I can implement to avoid or minimize impacts to migratory birds.

Nationwide Conservation Measures describes measures that can help avoid and minimize impacts to all birds at any location year round. Implementation of these measures is particularly important when birds are most likely to occur in the project area. When birds may be breeding in the area, identifying the locations of any active nests and avoiding their destruction is a very helpful impact minimization measure. To see when birds are most likely to occur and be breeding in your project area, view the Probability of Presence Summary. Additional measures and/or permits may be advisable depending on the type of activity you are conducting and the type of infrastructure or bird species present on your project site.

What does IPaC use to generate the migratory birds potentially occurring in my specified location?

The Migratory Bird Resource List is comprised of USFWS Birds of Conservation Concern (BCC) and other species that may warrant special attention in your project location.

The migratory bird list generated for your project is derived from data provided by the Avian Knowledge Network (AKN). The AKN data is based on a growing collection of survey, banding, and citizen science datasets and is queried and filtered to return a list of those birds reported as occurring in the 10km grid cell(s) which your project intersects, and that have been identified as warranting special attention because they are a BCC species in that area, an eagle (Eagle Act requirements may apply), or a species that has a particular vulnerability to offshore activities or development.

Again, the Migratory Bird Resource list includes only a subset of birds that may occur in your project area. It is not representative of all birds that may occur in your project area. To get a list of all birds potentially present in your project area, please visit the E-bird Explore Data Tool.

What does IPaC use to generate the probability of presence graphs for the migratory birds potentially occurring in my specified location?

The probability of presence graphs associated with your migratory bird list are based on data provided by the Avian Knowledge Network (AKN). This data is derived from a growing collection of survey, banding, and citizen science datasets .

Probability of presence data is continuously being updated as new and better information becomes available. To learn more about how the probability of presence graphs are produced and how to interpret them, go the Probability of Presence Summary and then click on the "Tell me about these graphs" link.

How do I know if a bird is breeding, wintering, migrating or present year-round in my project area?

To see what part of a particular bird's range your project area falls within (i.e. breeding, wintering, migrating or year-round), you may refer to the following resources: The Cornell Lab of Ornithology All About Birds Bird Guide, or (if you are unsuccessful in locating the bird of interest there), the Cornell Lab of Ornithology Neotropical Birds guide. If a bird on your migratory bird species list has a breeding season associated with it, if that bird does occur in your project area, there may be nests present at some point within the timeframe specified. If "Breeds elsewhere" is indicated, then the bird likely does not breed in your project area.

What are the levels of concern for migratory birds?

Migratory birds delivered through IPaC fall into the following distinct categories of concern:

1. "BCC Rangewide" birds are Birds of Conservation Concern (BCC) that are of concern throughout their range anywhere within the USA (including Hawaii, the Pacific Islands, Puerto Rico, and the Virgin Islands);
2. "BCC - BCR" birds are BCCs that are of concern only in particular Bird Conservation Regions (BCRs) in the continental USA; and
3. "Non-BCC - Vulnerable" birds are not BCC species in your project area, but appear on your list either because of the Eagle Act requirements (for eagles) or (for non-eagles) potential susceptibilities in offshore areas from certain types of development or activities (e.g. offshore energy development or longline fishing).

Although it is important to try to avoid and minimize impacts to all birds, efforts should be made, in particular, to avoid and minimize impacts to the birds on this list, especially eagles and BCC species of rangewide concern. For more information on conservation measures you can implement to help avoid and minimize migratory bird impacts and requirements for eagles, please see the FAQs for these topics.

Details about birds that are potentially affected by offshore projects

For additional details about the relative occurrence and abundance of both individual bird species and groups of bird species within your project area off the Atlantic Coast, please visit the Northeast Ocean Data Portal. The Portal also offers data and information about other taxa besides birds that may be helpful to you in your project review. Alternately, you may download the bird model results files underlying the portal maps through the NOAA NCCOS Integrative Statistical Modeling and Predictive Mapping of Marine Bird Distributions and Abundance on the Atlantic Outer Continental Shelf project webpage.

NOT FOR CONSULTATION

Bird tracking data can also provide additional details about occurrence and habitat use throughout the year, including migration. Models relying on survey data may not include this information. For additional information on marine bird tracking data, see the Diving Bird Study and the nanotag studies or contact Caleb Spiegel or Pam Loring.

What if I have eagles on my list?

If your project has the potential to disturb or kill eagles, you may need to obtain a permit to avoid violating the Eagle Act should such impacts occur.

Proper Interpretation and Use of Your Migratory Bird Report

The migratory bird list generated is not a list of all birds in your project area, only a subset of birds of priority concern. To learn more about how your list is generated, and see options for identifying what other birds may be in your project area, please see the FAQ "What does IPaC use to generate the migratory birds potentially occurring in my specified location". Please be aware this report provides the "probability of presence" of birds within the 10 km grid cell(s) that overlap your project; not your exact project footprint. On the graphs provided, please also look carefully at the survey effort (indicated by the black vertical bar) and for the existence of the "no data" indicator (a red horizontal bar). A high survey effort is the key component. If the survey effort is high, then the probability of presence score can be viewed as more dependable. In contrast, a low survey effort bar or no data bar means a lack of data and, therefore, a lack of certainty about presence of the species. This list is not perfect; it is simply a starting point for identifying what birds of concern have the potential to be in your project area, when they might be there, and if they might be breeding (which means nests might be present). The list helps you know what to look for to confirm presence, and helps guide you in knowing when to implement conservation measures to avoid or minimize potential impacts from your project activities, should presence be confirmed. To learn more about conservation measures, visit the FAQ "Tell me about conservation measures I can implement to avoid or minimize impacts to migratory birds" at the bottom of your migratory bird trust resources page.

NOT FOR CONSULTATION

Facilities

Wildlife refuges and fish hatcheries

REFUGE AND FISH HATCHERY INFORMATION IS NOT AVAILABLE AT THIS TIME

Wetlands in the National Wetlands Inventory

Impacts to NWI wetlands and other aquatic habitats may be subject to regulation under Section 404 of the Clean Water Act, or other State/Federal statutes.

For more information please contact the Regulatory Program of the local U.S. Army Corps of Engineers District.

Please note that the NWI data being shown may be out of date. We are currently working to update our NWI data set. We recommend you verify these results with a site visit to determine the actual extent of wetlands on site.

This location overlaps the following wetlands:

FRESHWATER FORESTED/SHRUB WETLAND

PFO1E

FRESHWATER POND

PUBHh

LAKE

L1UBHh

RIVERINE

R2UBH

R2UBHh

A full description for each wetland code can be found at the National Wetlands Inventory website

Data limitations

The Service's objective of mapping wetlands and deepwater habitats is to produce reconnaissance level information on the location, type and size of these resources. The maps are prepared from the analysis of high altitude imagery. Wetlands are identified based on vegetation, visible hydrology and geography. A margin of error is inherent in the use of imagery; thus, detailed on-the-ground inspection of any particular site may result in revision of the wetland boundaries or classification established through image analysis.

The accuracy of image interpretation depends on the quality of the imagery, the experience of the image analysts, the amount and quality of the collateral data and the amount of ground truth verification work conducted. Metadata should be consulted to determine the date of the source imagery used and any mapping problems.

Wetlands or other mapped features may have changed since the date of the imagery or field work. There may be occasional differences in polygon boundaries or classifications between the information depicted on the map and the actual conditions on site.

Data exclusions

Certain wetland habitats are excluded from the National mapping program because of the limitations of aerial imagery as the primary data source used to detect wetlands. These habitats include seagrasses or submerged aquatic vegetation that are found in the intertidal and subtidal zones of estuaries and nearshore coastal waters. Some deepwater reef communities (coral or tuberficid worm reefs) have also been excluded from the inventory. These habitats, because of their depth, go undetected by aerial imagery.

Data precautions

Federal, state, and local regulatory agencies with jurisdiction over wetlands may define and describe wetlands in a different manner than that used in this inventory. There is no attempt, in either the design or products of this inventory, to define the limits of proprietary jurisdiction of any Federal, state, or local government or to establish the geographical scope of the regulatory programs of government agencies. Persons intending to engage in activities involving modifications within or adjacent to wetland areas should seek the advice of appropriate federal, state, or local agencies concerning specified agency regulatory programs and proprietary jurisdictions that may affect such activities.

NOT FOR CONSULTATION

ATTACHMENT 3

United States Department of the Interior

FISH AND WILDLIFE SERVICE
Long Island Ecological Services Field Office
340 Smith Road
Shirley, NY 11967-2258
Phone: (631) 286-0485 Fax: (631) 286-4003

In Reply Refer To: September 26, 2018
Consultation Code: 05E1LI00-2018-SLI-0907
Event Code: 05E1LI00-2018-E-01943
Project Name: Carlls River Tributary/Watershed Project, Village of Babylon, West Babylon

Subject: List of threatened and endangered species that may occur in your proposed project location, and/or may be affected by your proposed project

To Whom It May Concern:

The enclosed species list identifies threatened, endangered, proposed and candidate species, as well as proposed and final designated critical habitat, that may occur within the boundary of your proposed project and/or may be affected by your proposed project. The species list fulfills the requirements of the U.S. Fish and Wildlife Service (Service) under section 7(c) of the Endangered Species Act (Act) of 1973, as amended (16 U.S.C. 1531 *et seq.*).

New information based on updated surveys, changes in the abundance and distribution of species, changed habitat conditions, or other factors could change this list. Please feel free to contact us if you need more current information or assistance regarding the potential impacts to federally proposed, listed, and candidate species and federally designated and proposed critical habitat. Please note that under 50 CFR 402.12(e) of the regulations implementing section 7 of the Act, the accuracy of this species list should be verified after 90 days. This verification can be completed formally or informally as desired. The Service recommends that verification be completed by visiting the ECOS-IPaC website at regular intervals during project planning and implementation for updates to species lists and information. An updated list may be requested through the ECOS-IPaC system by completing the same process used to receive the enclosed list.

The purpose of the Act is to provide a means whereby threatened and endangered species and the ecosystems upon which they depend may be conserved. Under sections 7(a)(1) and 7(a)(2) of the Act and its implementing regulations (50 CFR 402 *et seq.*), Federal agencies are required to utilize their authorities to carry out programs for the conservation of threatened and endangered species and to determine whether projects may affect threatened and endangered species and/or designated critical habitat.

A Biological Assessment is required for construction projects (or other undertakings having similar physical impacts) that are major Federal actions significantly affecting the quality of the human environment as defined in the National Environmental Policy Act (42 U.S.C. 4332(2)(c)). For projects other than major construction activities, the Service suggests that a biological evaluation similar to a Biological Assessment be prepared to determine whether the project may affect listed or proposed species and/or designated or proposed critical habitat. Recommended contents of a Biological Assessment are described at 50 CFR 402.12.

If a Federal agency determines, based on the Biological Assessment or biological evaluation, that listed species and/or designated critical habitat may be affected by the proposed project, the agency is required to consult with the Service pursuant to 50 CFR 402. In addition, the Service recommends that candidate species, proposed species and proposed critical habitat be addressed within the consultation. More information on the regulations and procedures for section 7 consultation, including the role of permit or license applicants, can be found in the "Endangered Species Consultation Handbook" at:

http://www.fws.gov/endangered/esa-library/pdf/TOC-GLOS.PDF

Please be aware that bald and golden eagles are protected under the Bald and Golden Eagle Protection Act (16 U.S.C. 668 *et seq.*), and projects affecting these species may require development of an eagle conservation plan (http://www.fws.gov/windenergy/eagle_guidance.html). Additionally, wind energy projects should follow the wind energy guidelines (http://www.fws.gov/windenergy/) for minimizing impacts to migratory birds and bats.

Guidance for minimizing impacts to migratory birds for projects including communications towers (e.g., cellular, digital television, radio, and emergency broadcast) can be found at: http://www.fws.gov/migratorybirds/CurrentBirdIssues/Hazards/towers/towers.htm; http://www.towerkill.com; and http://www.fws.gov/migratorybirds/CurrentBirdIssues/Hazards/towers/comtow.html.

We appreciate your concern for threatened and endangered species. The Service encourages Federal agencies to include conservation of threatened and endangered species into their project planning to further the purposes of the Act. Please include the Consultation Tracking Number in the header of this letter with any request for consultation or correspondence about your project that you submit to our office.

Attachment(s):

- Official Species List

Official Species List

This list is provided pursuant to Section 7 of the Endangered Species Act, and fulfills the requirement for Federal agencies to "request of the Secretary of the Interior information whether any species which is listed or proposed to be listed may be present in the area of a proposed action".

This species list is provided by:

Long Island Ecological Services Field Office
340 Smith Road
Shirley, NY 11967-2258
(631) 286-0485

Project Summary

Consultation Code: 05E1LI00-2018-SLI-0907

Event Code: 05E1LI00-2018-E-01943

Project Name: Carlls River Tributary/Watershed Project, Village of Babylon, West Babylon

Project Type: Federal Grant / Loan Related

Project Description: The Town of Babylon is requesting funding for the implementation of watershed improvements which would manage water flow in the Carlls River tributary watershed to avert flooding within the Village of Babylon and the Town of Babylon Hamlet of West Babylon. This multicomponent project would allow water levels within this watershed to be adjusted by means of dams, floodgates, and new stormwater retention wetland areas to increase flood protection and reduce the exposure of major assets and residential areas to severe flooding and flood damage.

Following a hydrologic and hydraulic analyses performed in 2016 as part of a comprehensive watershed engineering study, several projects were identified based on ease of implementation/constructability, overall effectiveness in addressing water quality or flood control for the watershed, and stakeholder input. The five specific projects are located at various points within the watershed area and are listed below:

• Sunrise Highway - Construct a stormwater wetland basin

• Elda Lake - Install new control gate; operate gate prior to major anticipated storms to provide pre-emptive lowering; construct a new primary spillway culvert; install a fish ladder

• Southards Pond - Install new control gate; operate gate prior to major anticipated storms to provide pre-emptive lowering; replace two arch side relief culverts wit new, larger relief culvert; install natural fish passage channel (preferred over fish ladder due to ecological benefits

• Argyle Lake - Install new control gate; operate gate prior to major anticipated storms to provide pre-emptive lowering; replace existing relief culvert with larger structure

• Locust Avenue - replace existing 13’ wide culvert with new 26’ wide culvert

This multi-phase infrastructure project would significantly reduce flood risk to residential areas, commercial assets, major and secondary transportation corridors and LIRR infrastructure and protect park and open space assets. Enhanced flood protection is expected to reduce the vulnerability of residential areas within extreme and high flood-risk areas. The project also will reduce vulnerability of secondary roads in the extreme risk areas, as well as Argyle Lake Park. The resulting preservation and enhancement of the watershed would reduce risk throughout much of the community. Major beneficiaries of the project include the population of target areas within the Village of Babylon.

Project Location:

Approximate location of the project can be viewed in Google Maps: https://www.google.com/maps/place/40.71496233357303N73.3325193999824W

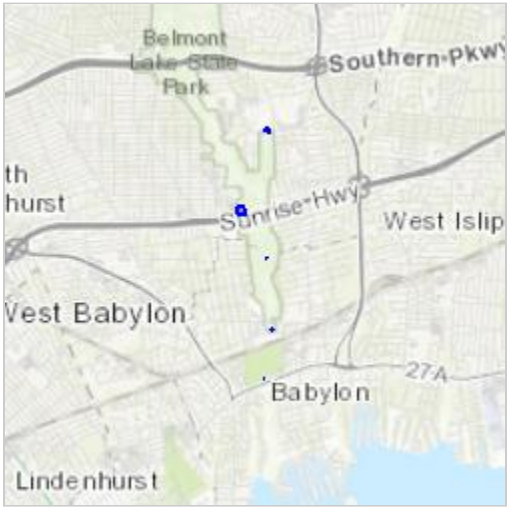

Counties: Suffolk, NY

Endangered Species Act Species

There is a total of 6 threatened, endangered, or candidate species on this species list.

Species on this list should be considered in an effects analysis for your project and could include species that exist in another geographic area. For example, certain fish may appear on the species list because a project could affect downstream species.

IPaC does not display listed species or critical habitats under the sole jurisdiction of NOAA Fisheries[1], as USFWS does not have the authority to speak on behalf of NOAA and the Department of Commerce.

See the "Critical habitats" section below for those critical habitats that lie wholly or partially within your project area under this office's jurisdiction. Please contact the designated FWS office if you have questions.

---

1. NOAA Fisheries, also known as the National Marine Fisheries Service (NMFS), is an office of the National Oceanic and Atmospheric Administration within the Department of Commerce.

Mammals

NAME	STATUS
Northern Long-eared Bat *Myotis septentrionalis* No critical habitat has been designated for this species. Species profile: https://ecos.fws.gov/ecp/species/9045	Threatened

Birds

NAME	STATUS
Piping Plover *Charadrius melodus* Population: [Atlantic Coast and Northern Great Plains populations] - Wherever found, except those areas where listed as endangered. There is **final** critical habitat for this species. Your location is outside the critical habitat. Species profile: https://ecos.fws.gov/ecp/species/6039	Threatened
Red Knot *Calidris canutus rufa* No critical habitat has been designated for this species. Species profile: https://ecos.fws.gov/ecp/species/1864	Threatened
Roseate Tern *Sterna dougallii dougallii* Population: northeast U.S. nesting pop. No critical habitat has been designated for this species. Species profile: https://ecos.fws.gov/ecp/species/2083	Endangered

Flowering Plants

NAME	STATUS
Sandplain Gerardia *Agalinis acuta* No critical habitat has been designated for this species. Species profile: https://ecos.fws.gov/ecp/species/8128	Endangered
Seabeach Amaranth *Amaranthus pumilus* No critical habitat has been designated for this species. Species profile: https://ecos.fws.gov/ecp/species/8549	Threatened

Critical habitats

THERE ARE NO CRITICAL HABITATS WITHIN YOUR PROJECT AREA UNDER THIS OFFICE'S JURISDICTION.

ATTACHMENT 4

NEW YORK STATE DEPARTMENT OF ENVIRONMENTAL CONSERVATION

Division of Fish and Wildlife, New York Natural Heritage Program
625 Broadway, Fifth Floor, Albany, NY 12233-4757
P: (518) 402-8935 | F: (518) 402-8925
www.dec.ny.gov

November 7, 2018

Tara Stewart
Louis Berger
412 Mt. Kemble Avenue, P.O. Box 1946
Morristown, NJ 07962

Re: Carlls River Tributary/Watershed Project
County: Suffolk Town/City: Babylon

Dear Ms. Stewart:

In response to your recent request, we have reviewed the New York Natural Heritage Program database with respect to the above project.

Enclosed is a report of rare or state-listed animals and plants, and significant natural communities that our database indicates occur in the vicinity of the project site.

For most sites, comprehensive field surveys have not been conducted; the enclosed report only includes records from our database. We cannot provide a definitive statement as to the presence or absence of all rare or state-listed species or significant natural communities. Depending on the nature of the project and the conditions at the project site, further information from on-site surveys or other sources may be required to fully assess impacts on biological resources.

Our database is continually growing as records are added and updated. If this proposed project is still under development one year from now, we recommend that you contact us again so that we may update this response with the most current information.

The presence of the plants and animals identified in the enclosed report may result in this project requiring additional review or permit conditions. For further guidance, and for information regarding other permits that may be required under state law for regulated areas or activities (e.g., regulated wetlands), please contact the NYS DEC Region 1 Office, Division of Environmental Permits, as listed at dep.r1@dec.ny.gov.

Sincerely,

Nicholas Conrad
Information Resources Coordinator
New York Natural Heritage Program

1289

The following rare plants, rare animals, and significant natural communities have been documented at the project site, or in its vicinity.

We recommend that potential impacts of the proposed project on these species or communities be addressed as part of any environmental assessment or review conducted as part of the planning, permitting and approval process, such as reviews conducted under SEQR. Field surveys of the project site may be necessary to determine the status of a species at the site, particularly for sites that are currently undeveloped and may still contain suitable habitat. Final requirements of the project to avoid, minimize, or mitigate potential impacts are determined by the lead permitting agency or the government body approving the project.

The following animal, while not listed by New York State as Endangered or Threatened, is of conservation concern to the state, and is considered rare by the New York Natural Heritage Program.

COMMON NAME	*SCIENTIFIC NAME*	*NY STATE LISTING*	*HERITAGE CONSERVATION STATUS*
Birds			
Prothonotary Warbler *Breeding*	*Protonotaria citrea*	Protected Bird	Imperiled in NYS

Belmont, at or very near the project sites at Elda Lake, Sunrise Highway, and Southards Pond, and within 0.5 mile of the project sites at Locust Avenue and Argyle Lake, 2000-05: The birds were found at a riparian stream edge in a red maple-blackgum swamp. The understory vegetation includes sweet pepperbush and cinammon fern. 7785

The following natural community is considered significant from a statewide perspective by the NY Natural Heritage Program. It is either an example of a community type that is rare in the state, or a high-quality example of a more common community type. By meeting specific, documented criteria, the NY Natural Heritage Program considers this community occurrence to have high ecological and conservation value.

COMMON NAME	*SCIENTIFIC NAME*	*NY STATE LISTING*	*HERITAGE CONSERVATION STATUS*
Wetland/Aquatic Communities			
Red Maple-Blackgum Swamp			High-quality Occurrence of Rare Community Type

Belmont Lake, at or very near the project sites at Elda Lake, Sunrise Highway, and Southards Pond, and within 0.5 mile of the project sites at Locust Avenue and Argyle Lake: A forested swamp of large size with surprisingly few exotic species, located within a landscape that is surrounded by heavy development. Several bridges and culverts have been placed across the stream that flows through the swamp. 8164

The following plant is listed as Endangered by New York State, and is considered rare by the New York Natural Heritage Program, and so is a vulnerable natural resource of conservation concern.

COMMON NAME	*SCIENTIFIC NAME*	*NY STATE LISTING*	*HERITAGE CONSERVATION STATUS*
Vascular Plants			
Sweetbay Magnolia	*Magnolia virginiana var. virginiana*	Endangered	Critically Imperiled in NYS

Belmont Lake South, within 0.5 mile of the project sites at Elda Lake and Sunrise Highway, 2001-06-28: These trees are located within a red maple hardwood swamp on state park property that is surrounded by intense residential development. A narrow stream flows through the wooded sections of the state park. At the point where this stream divides and begins to expand into a large wooded swamp, the magnolia trees begin to appear. Some of the trees are located directly along the edge of a dirt trail. The trees are often multi-trunked and located on super-saturated soil. In most locations, the soil is firm and walkable. The area also seems like it may provide potential habitat for *Populus heterophylla*. 3770

This report only includes records from the NY Natural Heritage database. For most sites, comprehensive field surveys have not been conducted, and we cannot provide a definitive statement as to the presence or absence of all rare or state-listed species. Depending on the nature of the project and the conditions at the project site, further information from on-site surveys or other sources may be required to fully assess impacts on biological resources.

If any rare plants or animals are documented during site visits, we request that information on the observations be provided to the New York Natural Heritage Program so that we may update our database.

Information about many of the rare animals and plants in New York, including habitat, biology, identification, conservation, and management, are available online in Natural Heritage's Conservation Guides at www.guides.nynhp.org, from NatureServe Explorer at www.natureserve.org/explorer, and from USDA's Plants Database at http://plants.usda.gov/index.html (for plants).

Information about many of the natural community types in New York, including identification, dominant and characteristic vegetation, distribution, conservation, and management, is available online in Natural Heritage's Conservation Guides at www.guides.nynhp.org. For descriptions of all community types, go to www.dec.ny.gov/animals/97703.html for Ecological Communities of New York State.

ATTACHMENT 5

Northern Long-Eared Bat 4(d) Rule Streamlined Consultation Form

Federal agencies should use this form for the optional streamlined consultation framework for the northern long-eared bat (NLEB). This framework allows federal agencies to rely upon the U.S. Fish and Wildlife Service's (USFWS) January 5, 2016, intra-Service Programmatic Biological Opinion (BO) on the final 4(d) rule for the NLEB for section 7(a)(2) compliance by: (1) notifying the USFWS that an action agency will use the streamlined framework; (2) describing the project with sufficient detail to support the required determination; and (3) enabling the USFWS to track effects and determine if reinitiation of consultation is required per 50 CFR 402.16.

This form is not necessary if an agency determines that a proposed action will have no effect to the NLEB or if the USFWS has concurred in writing with an agency's determination that a proposed action may affect, but is not likely to adversely affect the NLEB (i.e., the standard informal consultation process). Actions that may cause prohibited incidental take require separate formal consultation. Providing this information does not address section 7(a)(2) compliance for any other listed species.

Information to Determine 4(d) Rule Compliance:	**YES**	**NO**
1. Does the project occur wholly outside of the WNS Zone[1]?	☐	☒
2. Have you contacted the appropriate agency[2] to determine if your project is near known hibernacula or maternity roost trees?	☒	☐
3. Could the project disturb hibernating NLEBs in a known hibernaculum?	☐	☒
4. Could the project alter the entrance or interior environment of a known hibernaculum?	☐	☒
5. Does the project remove any trees within 0.25 miles of a known hibernaculum at any time of year?	☐	☒
6. Would the project cut or destroy known occupied maternity roost trees, or any other trees within a 150-foot radius from the maternity roost tree from June 1 through July 31.	☐	☒

You are eligible to use this form if you have answered yes to question #1 **or** yes to question #2 **and** no to questions 3, 4, 5 and 6. The remainder of the form will be used by the USFWS to track our assumptions in the BO.

Agency and Applicant[3] (Name, Email, Phone No.):

James McAllister , Governor's Office of Storm Recovery; Email: james.mcallister@stormrecovery.ny.gov; Phone: (646) 256-9485

Project Name: Carlls River Tributary/Watershed Project

Project Location (include coordinates if known): Town of Babylon, Suffolk County, New York
40°42'33.54"N/ 73°19'42.41"W

Basic Project Description (provide narrative below or attach additional information):

The Town of Babylon is proposing the implementation of watershed improvements which would manage water flow in the Carlls River tributary watershed to avert flooding within the Village of Babylon and the Town of Babylon Hamlet of West Babylon. The proposed improvements would reduce flooding in communities adjacent to the river corridor. Additional objectives of the project are water quality protection and flood mitigation for the Carlls River Tributary Watershed. The project would allow water levels within this watershed to be adjusted by means of dams, floodgates, and new stormwater retention wetland areas to increase flood protection and reduce the exposure of major assets and residential areas to severe flooding and flood damage.

---

[1] http://www.fws.gov/midwest/endangered/mammals/nleb/pdf/WNSZone.pdf
[2] See http://www.fws.gov/midwest/endangered/mammals/nleb/nhisites.html
[3] If applicable - only needed for federal actions with applicants (e.g., for a permit, etc.) who are party to the consultation.

General Project Information	YES	NO
Does the project occur within 0.25 miles of a known hibernaculum?	☐	☒
Does the project occur within 150 feet of a known maternity roost tree?	☐	☒
Does the project include forest conversion[4]? (if yes, report acreage below)	☒	☐
Estimated total acres of forest conversion	1.3	
If known, estimated acres[5] of forest conversion from April 1 to October 31	1.3	
If known, estimated acres of forest conversion from June 1 to July 31[6]	1.3	
Does the project include timber harvest? (if yes, report acreage below)	☐	☒
Estimated total acres of timber harvest		
If known, estimated acres of timber harvest from April 1 to October 31		
If known, estimated acres of timber harvest from June 1 to July 31		
Does the project include prescribed fire? (if yes, report acreage below)	☐	☒
Estimated total acres of prescribed fire		
If known, estimated acres of prescribed fire from April 1 to October 31		
If known, estimated acres of prescribed fire from June 1 to July 31		
Does the project install new wind turbines? (if yes, report capacity in MW below)	☐	☒
Estimated wind capacity (MW)		

Agency Determination:

By signing this form, the action agency determines that this project may affect the NLEB, but that any resulting incidental take of the NLEB is not prohibited by the final 4(d) rule.

If the USFWS does not respond within 30 days from submittal of this form, the action agency may presume that its determination is informed by the best available information and that its project responsibilities under 7(a)(2) with respect to the NLEB are fulfilled through the USFWS January 5, 2016, Programmatic BO. The action agency will update this determination annually for multi-year activities.

The action agency understands that the USFWS presumes that all activities are implemented as described herein. The action agency will promptly report any departures from the described activities to the appropriate USFWS Field Office. The action agency will provide the appropriate USFWS Field Office with the results of any surveys conducted for the NLEB. Involved parties will promptly notify the appropriate USFWS Field Office upon finding a dead, injured, or sick NLEB.

Signature: _____ Date Submitted: _____

[4] Any activity that temporarily or permanently removes suitable forested habitat, including, but not limited to, tree removal from development, energy production and transmission, mining, agriculture, etc. (see page 48 of the BO).
[5] If the project removes less than 10 trees and the acreage is unknown, report the acreage as less than 0.1 acre.
[6] If the activity includes tree clearing in June and July, also include those acreage in April to October.

From: Papa, Steve <steve_papa@fws.gov>
Sent: Tuesday, June 18, 2019 8:50 AM
To: Shultz, Alicia (NYSHCR) <Alicia.Shultz@nyshcr.org>; Laurie Boullianne <laurie_boullianne@fws.gov>
Cc: McAllister, James (STORMRECOVERY) <James.McAllister@stormrecovery.ny.gov>
Subject: Re: [EXTERNAL] Baldwin Park - GOSR

ATTENTION: This email came from an external source. Do not open attachments or click on links from unknown senders or unexpected emails.

see attached NE acknowledgement for listed species other than northern long-eared bat. Because you used the streamlined consultation form for NLEB no further consultation is needed.

Thanks

Steven T. Papa
U.S. Fish and Wildlife Service
Long Island Field office
340 Smith Rd
Shirley, NY 11967
(631) 286-0485 (tel)
631) 286-4003 (fax)
Steve_Papa@fws.gov

"I only wish that besides protecting the songsters...we also protect the birds of the seashore..."
- **T. Roosevelt**

On Tue, Jun 11, 2019 at 12:48 PM Shultz, Alicia (NYSHCR) <Alicia.Shultz@nyshcr.org> wrote:

> Steve, will we be getting a response for the attached consultations.
>
> Thanks
>
> Alicia Shultz
> Senior Environmental Scientist
> New York State Homes & Community Renewal
> Governor's Office of Storm Recovery
> 38-40 State St.,408N, Hampton Plaza, Albany, NY 12207
> (518) 474-0647 | cell (917) 376-9003 Alicia.Shultz@nyshcr.org<mailto:Alicia.Shultz@nyshcr.org> |

FLOODPLAIN 8-STEP PROCESS IN ACCORDANCE WITH

EXECUTIVE ORDER 11988: FLOODPLAIN MANAGEMENT

AND

EXECUTIVE ORDER 11990: PROTECTION OF WETLANDS

New York Governor's Office of Storm Recovery (GOSR)

Carlls River Tributary Watershed Infrastructure Projects

Lori Shirley, Certifying Officer

December 10, 2019

Description of Proposed Program Activities

The Town of Babylon is proposing implementation of five projects within the approximately 38.7 square miles Carlls River tributary watershed in Suffolk County, New York. The Town of Babylon is requesting a total of $6,801,908.00 in CDBG-DR funding the implementation of the watershed improvements which would manage water flow in the Carlls River watershed to avert flooding within the Village of Babylon and the Town of Babylon's hamlet of West Babylon. This multicomponent project will allow water levels within this watershed to be adjusted by means of dams, floodgates, and new stormwater retention wetland areas to increase flood protection and reduce the exposure of major assets and residential areas to severe flooding and flood damage.

The specific projects are located at various points within the watershed area and are listed below:

Sunrise Highway

At Sunrise Highway (NYS Route 27), drainage improvements to reduce flooding and enhance water quality will consist of the construction of an ecologically diverse 1.5-acre stormwater management facility to capture runoff from the impervious roadway surfaces and recharge it. Proposed enrichments include:

1. Stormwater pre-treatment and approximately .25-acres (+/-10,600 sq.ft.) of proposed freshwater wetlands, directly north of the Sunrise Highway North Service Road. These wetlands will include native emergent and submergent herbaceous plantings between elevation 9 feet and elevation 15 feet, as well as upland tree and shrub plantings above elevation 15 feet. The permanent pool will maintain a water depth of 4 feet.
2. Excavation of 11,300 cubic yards of materials, to a maximum cut depth of 12 feet. The material will be removed from the site and disposed at an authorized facility. Re-grading within 1,100 square feet of existing wetlands will be required to establish the vegetated drainage swale; this grading will require no net cut/fill.
3. Wetland component structures, including an asphalt maintenance driveway, a 350-square-foot stormwater pre-treatment device, a concrete/paver maintenance driveway, a 4-foot earthen berm, a concrete riser structure and 30-inch concrete pipe, a 550-square-foot rip-rap scour apron, and a 1,500-square-foot rip-rap lined emergency spillway adjacent to the wetlands.

Elda Lake

Elda Lake improvements would enhance flood control capabilities for storm events. Improvements would include:

1. Installation of a new 3' X 4' sluice gate. The Town of Babylon Department of Public Works would be responsible for pre-emptive water level control in anticipation of significant precipitation or thawing events, as well as general and long-term maintenance. An operation and maintenance plan for the water control gate is included in Appendix H.
2. Installation of new catch basins and leaching structures as supplements to the existing drainage system.
3. Replacement of the existing arch culverts will be replaced with two 10' X 5' box culverts with geotextile bedding.
4. Use of cofferdams during installation of the culverts to eliminate and/or minimize concerns regarding sedimentation.
5. Installation of an NYSDEC-approved fish passage. The daylighted portion of the fish passage would be pile-supported with a maximum 1:6 slope. The portion under the roadway would comprise a 2-foot pipe.

Southards Pond

The proposed improvements at Southards Pond will open the pond and large reaches of the eastern and western spurs of the Carlls River to migratory fish as spawning habitat, as well as provide hydraulic improvements to reduce upstream flooding elevations and downstream peak flows during storm events. Proposed improvements include:

1. Replacement and up-sizing of the existing two (2) 36" x 60" CMP (corrugated metal pipe) overflow culverts with one 10' x 3' precast box culvert
2. Installation of an additional 2' x 3' precast box culvert and 2' x 3' sluice gate. The Village of Babylon Highway Department will use the new 2' x 3' control sluice gate to pre-emptively lower the pond by 2.0 ft. in advance of storms. For the proposed sluice gate, modelling indicates that the lake level can be dropped approximately 1.0 ft every 15 hours during low flow periods in advance of storms. The Village's Highway Department will also be responsible for other general and long-term maintenance. An operation and maintenance plan for the water control gate is included in Appendix H.
3. Construction of naturalized fish and wildlife passage and associated 25 cubic yards of rip-rap at 18" deep (450 sq. ft.), and 5) creation of 200 sq. ft. of wetland mitigation area.

Argyle Lake

Improvements at Argyle Lake would allow for flow control for storm events. The lake currently includes seven outflow features, including arch spillways, culverts, and a fish ladder. Improvements would be undertaken to the westernmost spillway and include:

1. Installation of a new control gauge and 4-foot x 4-foot sluice gate that would be operated by the Village of Babylon Highway Department prior to major anticipated storms to provide pre-emptive lowering. The Village's Highway Department would also be responsible for other general and long-term maintenance. An operation and maintenance plan for the water control gate is included in Appendix H.
2. Replacement of the existing 55-inch x 36-inch arch spillway with a 10-foot x 3-foot relief box culvert with geotextile bedding.
3. Replacement of the existing concrete sidewalk

Locust Avenue
Proposed improvements a Locust Avenue would provide hydraulic improvements by increasing stormwater conveyance capacity and reducing the potential for flooding. Improvements will include:

1. Upsizing of an existing culvert at Locust Avenue by replacement of the existing 15-foot-wide, 3-sided culvert (62 feet long) with a new 23-foot-wide-wide, 3-sided culvert (also 62 feet long) with an open-span road bridge supported by concrete sheet piles.
2. Installation of 12-inch-thick prestressed concrete piles to support the new culvert.
3. Installation of substrate within the new culvert to provide a more natural habitat for fish and wildlife.
4. Removal and replacement of existing gabions downstream of Locust Avenue, so as to align with the new span opening.

Step ONE: Determine whether the Proposed Action is located in a wetland and/or the 100-year floodplain (or a 500-year floodplain for a Critical Action).

SUNRISE HIGHWAY

This project is located within the Hamlet of West Babylon in Suffolk County, and approximately 0.23 acres of the project occurs within FEMA Zone "A". The project location also includes 0.26 acres of NYSDEC Class 1 wetlands.

ELDA LAKE

This project is located within the Hamlet of North Babylon in Suffolk County and is not located within the floodplain. The project location also includes 0.04 acres of NYSDEC Class 1 wetlands and 0.19 acres of NWI wetlands classified as Freshwater Forested/Shrub, Freshwater Pond and Riverine.

SOUTHARDS POND

This project is located within the Village of Babylon in Suffolk County, and approximately 0.19 acres of the project occurs within FEMA Zone "A". The project location also includes 0.18 acres of NYSDEC Class 1 wetlands and 0.18 acres of NWI wetlands classified as Freshwater Forested/Shrub and Lake.

ARGYLE LAKE

This project is located within the Village of Babylon in Suffolk County, and approximately 0.06 acres of the project occurs within FEMA Zone "AE" (Base Flood Elevation of 5 feet). The project location also includes 0.06 acres of NYSDEC Class 1 wetlands and 0.02 acres of NWI wetlands classified as.

LOCUST AVENUE

This project is located within the Village of Babylon in Suffolk County, and approximately 0.09 acres of the project occurs within FEMA Zone "A". The project location also includes 0.01 acres of NYSDEC Class 1 wetlands and 0.03 acres of NWI wetlands classified as Riverine.

Step TWO: Notify the public at the earliest possible time of a proposal to consider an action in a wetland or floodplain (or in the 500-year floodplain for a Critical Action), and involve the affected and interested public in the decision making process.

Because a portion of the Proposed Action activities would be located in the floodplain and/or near wetlands, GOSR must publish an early notice that allows the public an opportunity to provide input into the decision to provide funding for the Proposed Action activities in this area. Once the early public notice and comment period is complete, GOSR will assess, consider, and respond to the comments received individually and collectively for the Proposed Action file, then proceed to Step Three.

A 15-day "Early Notice and Public Explanation of a Proposed Activity in a 100-Year Floodplain and/or Wetland" was published in Babylon Beacon, on December 27, 2018. The 15-day period expired on January 14, 2019. The notice addressed residents who live in the floodplain.

GOSR received **0** public comments on this notice.

Step Three: Identify and evaluate practicable alternatives to locating the Proposed Action in a wetland or floodplain (or the 500-year floodplain for a Critical Action).

After a consideration of the No Action Alternative, GOSR has determined the best practicable alternative is the Proposed Action. Under a No Action alternative, conditions of the environment would remain unchanged and the community would not receive the intended benefits of the projects.

Step Four: Identify the potential direct and indirect impacts associated with the occupancy or modification of wetlands or floodplains (or 500-year floodplain for a Critical Action).

GOSR has evaluated alternatives to the Proposed Action activities in the wetlands and/or floodplain, and has determined that the proposed activities must take place in the floodplain and/or wetlands.

Of the five projects associated with the Proposed Activity, four projects are located within FEMA Special Flood Hazard Area (SFHA) Zone "A" or "AE", which is the area that will be inundated during 100-year flood events. No direct or indirect impacts anticipated from the activities listed below. Although located within the flood zone, the improvements would not be susceptible to damage from flooding and will not exacerbate flooding. Project activities involving floodplain occupancy during the period of construction will be performed within the existing development footprint. Ground disturbances would include installation of culverts and control gates and construction of a natural fish channel and wetland basin. Project activities would comply with floodplain development design standards and would be subject to review and approval by the local floodplain administrator, and would thus not exacerbate flooding, there are no direct or indirect impacts anticipated as a result of the Proposed Action.

While project-specific actions would result in localized, temporary disturbances within floodplains, no impacts to floodplain values would occur as a result of the Proposed Activity.

Impacts from these activities, individually and cumulatively, may result in temporary disturbances within floodplains but such disturbances would constitute less than 1 acre and would comply with applicable state and federal regulations pertaining to the protection of floodplains.

Wetlands present in the area of project activities include New York State Department of Environmental Conservation (NYSDEC) regulated Class I wetlands, as well as those classified by the National Wetland Inventory. While project-specific actions described above would result in localized, temporary disturbances of wetlands, only the Southards Pond project location would result in permanent loss of wetlands. Up to 450 square feet of wetlands would be lost. Accordingly, the proposed project includes establishment and re-planting of approximately 200 SF of mitigation wetland plantings (where no wetland vegetation currently exists) and restoration plantings in existing wetland areas that will be disturbed. At Sunrise Highway, the project would result in 10,600 SF of new wetlands, and at Elda Lake the project would result in 650 SF of new wetlands. As such, overall the project would result in a net increase in wetlands.

Overall direct wetland impacts from these activities, individually and cumulatively, would constitute less than 1 acre of temporary wetland disturbance and would comply with applicable state and federal regulations pertaining to the protection of wetlands. The project will be subject to joint permit approval by USACE and NYSDEC.

Given that the Proposed Action components located within the floodplain would need to comply with floodplain development design standards and would be subject to review and approval by the local floodplain administrator, and would thus not exacerbate flooding, there are no direct or indirect impacts anticipated as a result of the Proposed Action. The Proposed Action seeks to manage water flow in the Carlls River watershed to avert flooding within the Village of Babylon and the Town of Babylon Hamlet of West Babylon, and to provide water quality protection and flood mitigation for the Carlls River Tributary Watershed.

Step Five: Where practicable, design or modify the Proposed Action to minimize the potential adverse impacts within the floodplain (including the 500-year floodplain for a Critical Action) and to restore and preserve its natural and beneficial values.

As proposed, activities will be performed as described above under “Description of Proposed Program Activities.” During the design process, the project engineer will be required to support measures that protect the improvements from future storms, use storm and wave barrier best management practices, and accommodate resilience into infrastructure design.

GOSR will ensure that these mitigation measures will be adhered to. The project will be undertaken in accordance with Nationwide Permit 3, and any applicable permit issued by Department of Environmental Conservation (DEC). Also, prior to Project implementation, GOSR will conduct a National Environmental Policy Act (NEPA) review in accordance with 24 CFR Part 58 and a New York State Environmental Quality Review Act (SEQR) review in accordance with 6 NYCRR Part 617.

Step Six: Reevaluate the Proposed Action to determine: (1) Whether it is still practicable in light of its exposure to flood hazards in the floodplain, the extent to which it will aggravate the current hazards to other floodplains, and its potential to disrupt floodplain values; and (2) Whether alternatives preliminarily rejected at Step Three are practicable in light of the information gained in Steps Four and Five.

GOSR has reevaluated the Proposed Action and determined that the action is still practicable in light of its potential exposure to flood hazards in the floodplain. There is no practicable alternative to the Proposed Action. GOSR has also reconsidered the No Action alternative discussed in Step Three and determined the best practicable alternative is the Proposed Action. Therefore there is no practicable alternative to locating specific activities associated with the Proposed Action in the floodplain and/or wetlands.

Step Seven: If the reevaluation results in a determination that there is no practicable alternative to locating the proposal in the floodplain (or the 500-year floodplain for a Critical Action), publish a final notice.

It is GOSR's determination that the preferred alternative is the proposed Carlls River Tributary Watershed Projects. Among the numerous benefits of the Proposed Activity are management of water flow in the Carlls River watershed to avert flooding, and water quality protection and flood mitigation for the Carlls River Tributary Watershed.

A 7-day "Notice for Final Public Review of a Proposed Activity in a wetland and/or 100-Year Floodplain" will be published as part of a combined Notice of Intent to Request Release of Funds and Final Floodplain and Wetland Notice. The notice will target local residents, including those in the floodplain. The notice will also be sent to the following state and federal agencies: U.S. Department of the Interior (DOI); U.S. Environmental Protection Agency (EPA); U.S. Department of Homeland Security (DHS); U.S Fish and Wildlife Service (FWS); National Park Service (NPS); National Oceanic and Atmospheric Administration (NOAA); NOAA National Marine Fisheries Service (NMFS); U.S. Army Corps of Engineers (USACE); NYS Department Environmental Conservation; the NYS Office of Parks, Recreation and Historic Preservation; NYS Department of Transportation; and NYS Office of Emergency Management. The notice will also be sent to the Town of Babylon and the office of the Suffolk County Executive.

Step Eight: Implement the Action

Step eight is implementation of the Proposed Action. GOSR will ensure that all mitigation measures prescribed in the steps above will be adhered to. Also, prior to Proposed Action implementation, GOSR will conduct a National Environmental Policy Act (NEPA) review in accordance with 24 CFR Part 58 and a New York State Environmental Quality Review Act (SEQR) review in accordance with 6 NYCRR Part 617.

APPENDIX D – CORESPONDENCE: NEW YORK STATE OFFICE OF PARKS, RECREATION AND HISTORIC PRESERVATION

NEW YORK STATE OF OPPORTUNITY.
Parks, Recreation, and Historic Preservation

ANDREW M. CUOMO
Governor

ROSE HARVEY
Commissioner

May 29, 2018

Ms. Jessica Enzmann
Environmental GIS Analyst
Town of Babylon
200 E. Sunrise Highway
Lindenhurst, NY 11757

Re: DEC
Stormwater Infrastructure Improvements NY 27 Stormwater Wetlands
859-901 Sunrise Hwy, Town of Babylon, Suffolk County, NY
14PR02658

Dear Ms. Enzmann:

Thank you for requesting the comments of the Division for Historic Preservation of the Office of Parks, Recreation and Historic Preservation (OPRHP). We have reviewed the request for an updated OPRHP sign off letter in accordance with the New York State Historic Preservation Act of 1980 (section 14.09 of the New York Parks, Recreation and Historic Preservation Law). These comments are those of the Division for Historic Preservation and relate only to Historic/Cultural resources. They do not include potential environmental impacts to New York State Parkland that may be involved in or near your project. Such impacts must be considered as part of the environmental review of the project pursuant to the State Environmental Quality Review Act (New York Environmental Conservation Law Article 8) and its implementing regulations (6NYCRR Part 617).

Based upon this review, it is the OPRHP's opinion that your project will continue to have No Impact upon cultural resources in or eligible for inclusion in the State and National Register of Historic Places.

If you have any questions, I can be reached at (518) 268-2179.

Sincerely,

Nancy Herter

Nancy Herter
Archaeology Unit Program Coordinator

Governor's Office of
Storm Recovery

ANDREW M. CUOMO
Governor

October 24, 2018

Ms. Grace Musemeci
Chief of the Environmental Review Section
U.S. Environmental Protection Agency
Region 2 Main Regional Office
290 Broadway
New York, NY 10007-1866

Re: Sole Source Aquifer Analysis – CDBG-DR Funding Application
Carlls River Tributary Watershed Infrastructure Improvements Program

Dear Ms. Musemeci:

The New York State Governor's Office of Storm Recovery ("GOSR") received a funding application for the proposed implementation of the watershed improvements which would manage water flow in the Carlls River watershed to avert flooding within the Village of Babylon and the Town of Babylon Hamlet of West Babylon. A total of five projects are proposed at multiple locations within the Hamlets of West Babylon and North Babylon and in the Village of Babylon. The locations are listed below and illustrated in Figures 1 through 2c.

1. North side of Sunrise Highway (NYS Route 27) at Harvard Road, West Babylon
2. Elda Lake, Phelps Lane Park, 151 Phelps Lane, North Babylon
3. Southard's Pond, Southard's Pond Park, Babylon Village
4. Argyle Lake, Argyle Lake Park, West Main Street, Babylon Village
5. Locust Avenue Culvert, Locust Avenue, Southard's Pond Park, Babylon Village

The proposed improvements would allow water levels within the watershed to be adjusted by means of dams, floodgates, and new stormwater retention wetland areas to increase flood protection and reduce the exposure of major assets and residential areas to severe flooding and flood damage. The specific projects are located at various points within the watershed area and are described below:

- <u>Sunrise Highway</u>
  - Construct a stormwater wetland basin
- <u>Elda Lake</u>
  - Install new control gate;
  - Operate gate prior to major anticipated storms to provide pre-emptive lowering;
  - Construct a new primary spillway culvert;
  - Install a fish ladder
- <u>Southards Pond</u>
  - Install new control gate;
  - Operate gate prior to major anticipated storms to provide pre-emptive lowering;
  - Replace two arch side relief culverts wit new, larger relief culvert;

    - Install natural fish passage channel (preferred over fish ladder due to ecological benefits
- Argyle Lake
    - Install new control gate;
    - Operate gate prior to major anticipated storms to provide pre-emptive lowering;
    - Replace existing relief culvert with larger structure
- Locust Avenue
    - Replace existing 13' wide culvert with new 26' wide culvert

Pursuant to the Disaster Relief Appropriations Act, 2013 (Public Law 113-2) and the Housing and Community Development Act (42 U.S.C. § 5301 et seq.), GOSR is acting under the auspices of New York State Homes and Community Renewal's Housing Trust Fund Corporation as a recipient of Community Development Block Grant–Disaster Recovery ("CDBG-DR") funds from the United States Department of Housing and Urban Development ("HUD") and is the entity responsible for compliance with the HUD NEPA environmental review procedures set forth in 24 C.F.R. Part 58. 24 C.F.R. Part 58 requires GOSR to review projects for conformance with the Safe Drinking Water Act of 1974 (42 U.S.C. 201, 300(f) et seq., and 21 U.S.C. 349) as amended, and Environmental Protection Agency ("EPA") regulations pertaining to Sole Source Aquifers found at 40 C.F.R. Part 149.

In accordance with the Memorandum of Understanding ("MOU") between EPA and HUD dated August 24, 1990, GOSR hereby requests an Initial Screen/Preliminary Review for the above referenced project. Please review the attached documentation, including Attachment 2.A and Attachment 3 to the MOU.

For additional information, please contact me by e-mail at James.McAllister@stormrecovery.ny.gov or by telephone at (631) 465-9677.

Sincerely,

James McAllister
Senior Environmental Project Manager
Bureau of Environmental Review and Assessment
Governor's Office of Storm Recovery

Attachments:

- Figures
- Attachment 2.A - Non-Housing/Project Activity Initial Screen Criteria
- Attachment 3 - Preliminary Review Information Requirements
- SWAP Map

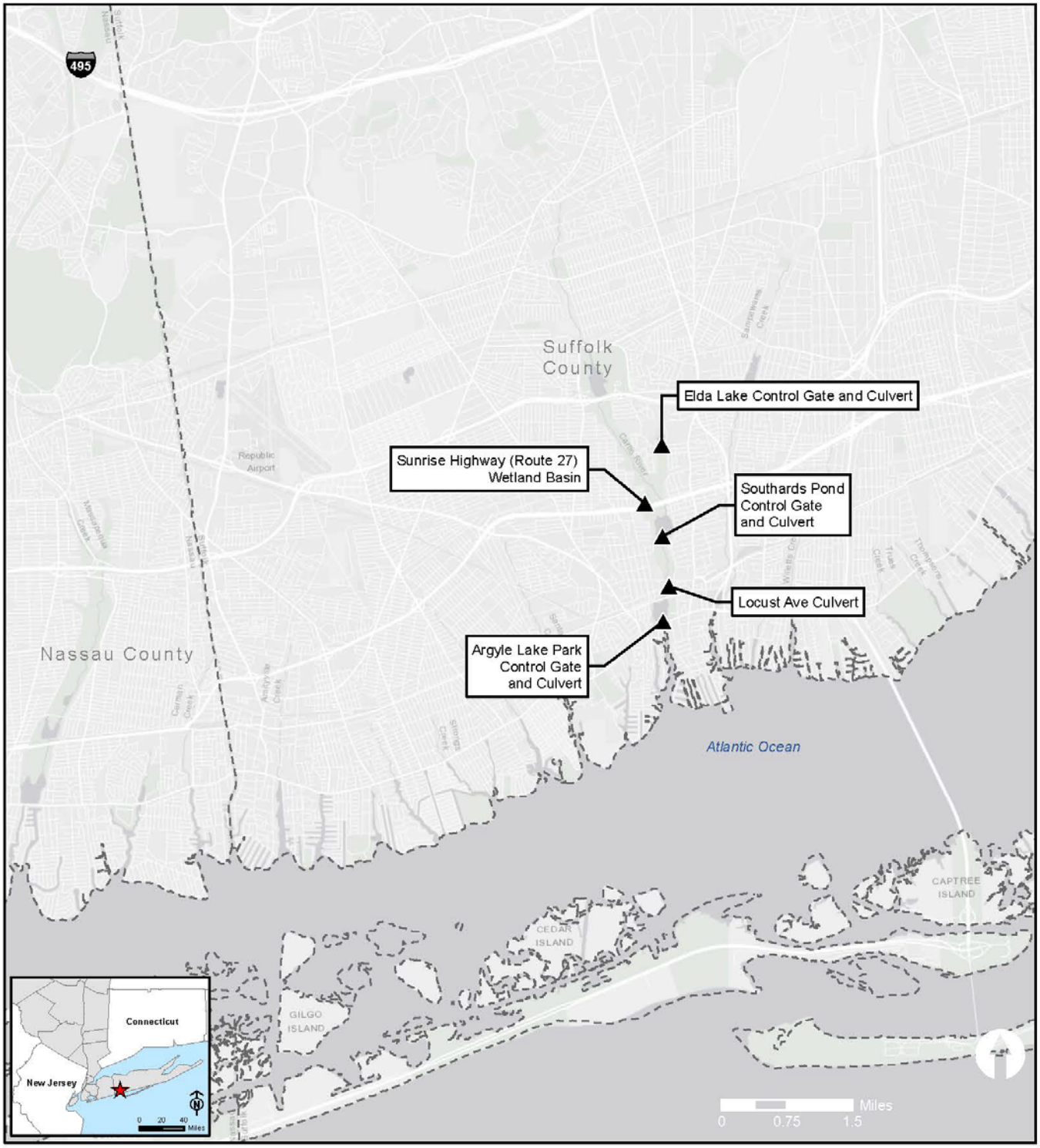

▲ Project Area
- - - County Boundary

Figure 1
Regional Location

Carlls River
Watershed Project

Source: ESRI World Light Gray Canvas Base

Louis Berger

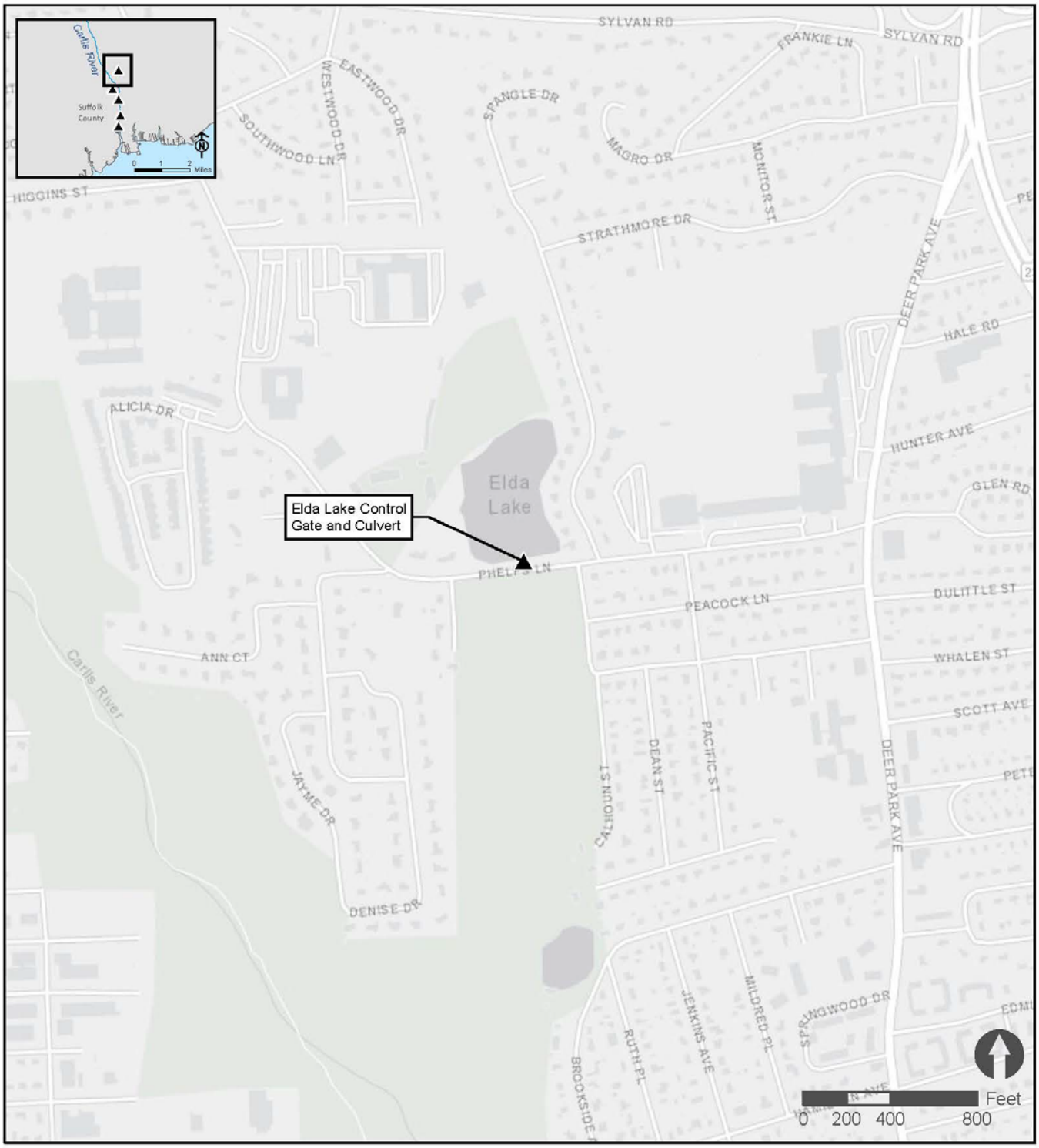

▲ Project Area

Figure 2a

Location of Projects

Carlls River
Watershed Project

Source: ESRI World Light Gray Canvas Base

Louis Berger

▲ Project Area

Figure 2b

Location of Projects

Carlls River
Watershed Project

Source: ESRI World Light Gray Canvas Base

Louis Berger

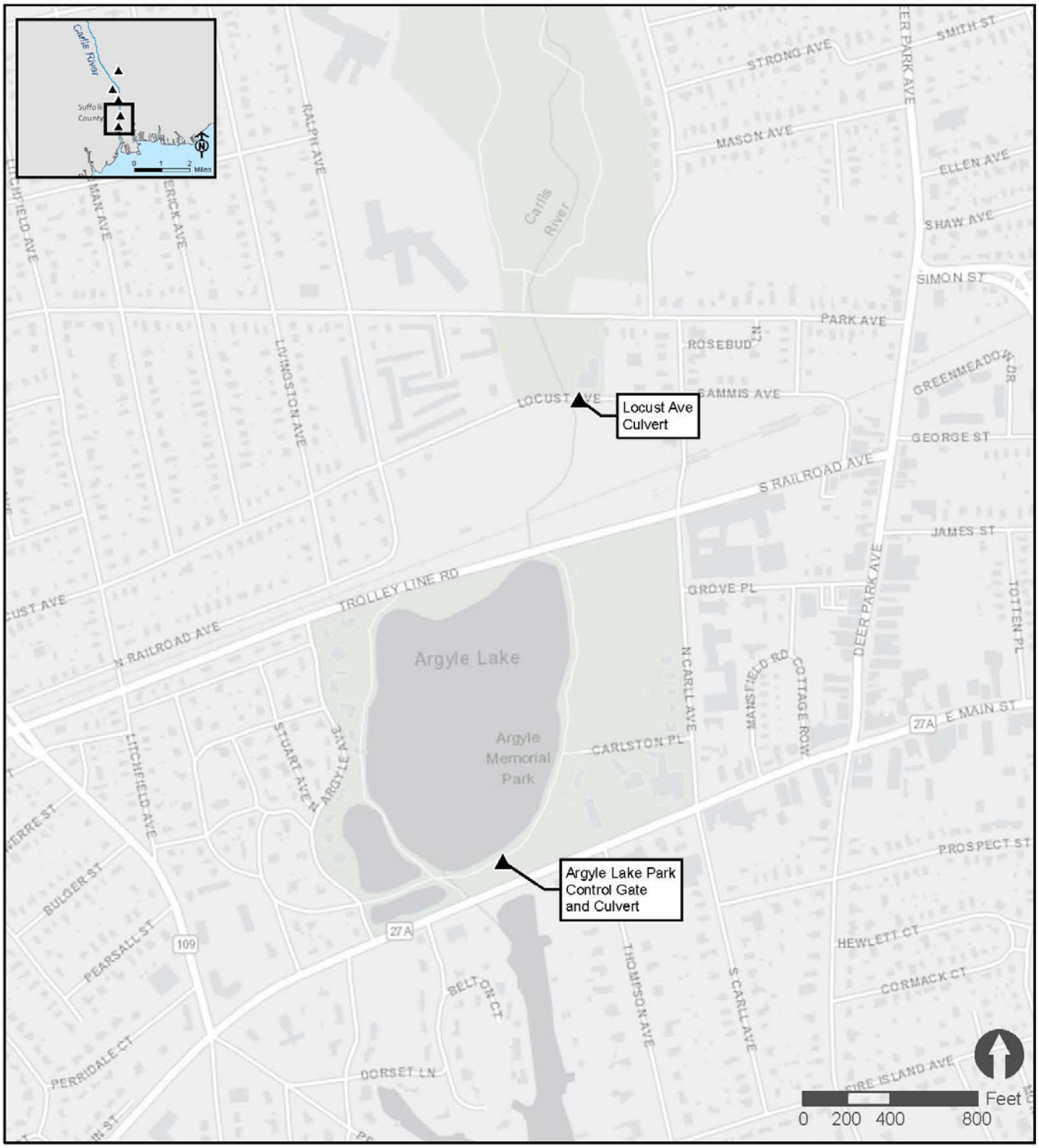

▲ Project Area

Figure 2c

Location of Projects

Carlls River
Watershed Project

Source: ESRI World Light Gray Canvas Base

Louis Berger

ATTACHMENT 2.A

NON-HOUSING/PROJECT ACTIVITY INITIAL SCREEN CRITERIA

The following list of criteria questions are to be used as an initial screen to determine which **non-housing** projects/activities should be forwarded to the Environmental Protection Agency (EPA) for Preliminary Sole Source Aquifer (SSA) Review. (For housing projects/activities see Attachment 2.B) If any of the questions are answered affirmatively, Attachment 3, SSA Preliminary Review Requirements, should also be completed. The application/final statement, this Attachment, Attachment 3, and any other pertinent information should than be forwarded to EPA at the address below.

Any project/activity not meeting the criteria in this Attachment, but suspected of having a potential adverse effect on the Sole Source Aquifer should also be forwarded.

CRITERIA QUESTIONS	YES	NO	N/A
1. Is the project/activity located within a currently designated or proposed groundwater sensitive area such as a special Ground Water Protection Area, Critical Supply Area, Wellhead Protection Area, etc.? [This information can be obtained from the County or Regional Planning board, the local health department, the State health department or the State environmental agency.]	☐	☒	☐
2. Is the project/activity located within a one half mile radius (2640 feet) of a current or proposed public water supply well or wellfield? [This information can be obtained from the local health department, the State health department or the State environmental agency.]	☒	☐	☒

3. Will the project/activity include or directly cause (check appropriate items):

	YES	NO	N/A
construction or expansion of solid waste disposal, recycling or conversion facilities	☐	☒	☐
construction or expansion or closure of landfills	☐	☒	☐
construction or expansion of water supply facilities	☐	☒	☐
construction or expansion of on-site wastewater treatment plants or sewage trunk lines	☐	☒	☐
construction or expansion of gas or petroleum trunk lines greater than 1320 feet	☐	☒	☐
construction or expansion of railroad spurs or similar extensions	☐	☒	☐
construction or expansion of municipal sewage treatment plants	☐	☒	☐

4. Will the project/activity include storage or handling of any hazardous constituents as listed in Attachment 4, Hazardous Constituents	☐	☒	☐
5. Will the project/activity include bulk storage of petroleum in underground or above ground tanks in excess of 1100 gallons? (Please give what assurance they are done in a proper manner.)	☐	☒	☐
6. Will the project/activity require a federal or state discharge elimination permit or modification of an existing permit?	☐	☒	☐

This attachment was completed by:

Name:	James McAllister
Title:	Senior Environmental Project Manager
Address:	500 Bi-County Blvd. Suite 300
	Farmingdale, NY 11735
Telephone number:	(646) 256-9485
Date:	October 24, 2018

ATTACHMENT 3

SSA PRELIMINARY REVIEW INFORMATION REQUIREMENTS

Where currently available, the information in this Attachment should be provided to the Environmental Protection Agency (see address below) along with the application/final statement; Attachment 2.A, Non-Housing Initial Screen Criteria or Attachment 2.B, Housing Initial Screen Criteria; and any other information which may be pertinent to a Sole Source Aquifer review. Where applicable, indicate the source of your information.

I. Project/Activity Location	**Enclosed?**	
	Yes	No
1. Provide the geographic location and total acreage of the project/activity site. Include a site map which identifies the site in relation to the surrounding area. [Examples of maps which can be used include: 1:24,000 or 1:25,000 U.S. Geological Survey quadrangle sheet, Hagstroms Street Map.]	☒	☐
2. If applicable, identify which groundwater sensitive areas (Special Ground Water Protection Area, Critical Supply Area, Wellhead Protection Area, etc.) the project/activity is located within or adjacent to. [This information may be obtained from the County or Regional planning board, the local health department, the State health department or the State environmental agency.]	☐	☒

II. Nature of Project/Activity	**Enclosed?**	
	Yes	No
3. Provide a general narrative describing the project/activity including but not limited to: type of facility; type of activities to be conducted; number and type of units; number of residents, etc. Provide the general layout of the project/activity site and site-plan if available.	☒	☐

III. Public Water Supply	**Enclosed?**	
	Yes	No
4. Provide a description of plans to provide water supply.	☐	☒

5. Provide the location of nearby existing or proposed public water supply wells or wellfields within one half mile radius (2640 feet) of the project/activity. Provide the name of the supplier(s) of those wells or wellfields. This information should be available from the local health department, State health department or the State environmental agency.	☐	☒

IV. Wastewater and Sewage Disposal	**Enclosed?**	
	Yes	No
6. Provide a description of plans to handle wastewater and sewage disposal. If the project/activity is to be served by existing public sanitary sewers provide the name of the sewer district.	☐	☒
7. Provide a description of plans to handle storm water runoff.	☐	☒
8. Identify the location, design, size of any on-site recharge basins, dry wells, leaching fields, retention ponds, etc.	☐	☒

V. Use, Storage, Transport of Hazardous or Toxic Materials *(Applies only to non-housing projects/activities)*	**Enclosed?**	
	Yes	No
9. Identify any products listed in Attachment 4, Hazardous Constituents, of the Housing and Urban Development-Environmental Protection Agency Memorandum of Understanding which may be used, stored, transported, or released as a result of the project not related to construction	☐	☒
10. Identify the number and capacity of underground storage tanks at the project/activity site. Identify the products and volume to be stored, and the location on the site.	☐	☒
11. Identify the number and capacity of above ground storage tanks at the project/activity site. Identify the products and volume to be stored, and the location on the site	☐	☒

This form was completed by:

Name:	James McAllister
Title:	Senior Environmental Project Manager
Address:	500 Bi-County Blvd.
	Farmingdale, NY 11735
Telephone number:	(646) 256-9485
Date:	October 24, 2018

I. Project/Activity Location

1. Provide the geographic location and total acreage of the project/activity site. Include a site location map which identifies the site in relation to the surrounding area. [Examples of maps which can be used include: 1:24,000 or 1:25,000 U.S. Geological Survey quadrangle sheet, Hagstroms Street Map.]

   Improvements are proposed at multiple locations within the Hamlet of West Babylon, NY 11704; Hamlet of North Babylon, NY 11703: and Village of Babylon, NY 11702

   1. North side of Sunrise Highway (NYS Route 27) at Harvard Road, West Babylon
   2. Elda Lake, Phelps Lane Park, 151 Phelps Lane, North Babylon
   3. Southard's Pond, Southard's Pond Park, Babylon Village
   4. Argyle Lake, Argyle Lake Park, West Main Street, Babylon Village
   5. Locust Avenue Culvert, Locust Avenue, Southard's Pond Park, Babylon Village

   See Figures 1 through 2c, below.

2. If applicable, identify which groundwater sensitive areas (Special Ground Water Protection Area, Critical Supply Area, Wellhead Protection Area etc.) the project/activity is located within or adjacent to. [This information may be obtained from the County or Regional planning board, the local health department, the State health department or the State environmental agency.

   The project/activity is not in an area with sensitive groundwater areas.

II. Nature of Project Activity

3. Provide a general narrative describing the project/activity including but not limited to: type of facility; type of activities to be conducted; number and type of units; number of residents etc. Provide the general layout of the project/activity site and a site-plan if available.

   The proposed improvements would manage water flow in the Carlls River watershed to avert flooding within the Village of Babylon and the Town of Babylon Hamlet of West Babylon. This multicomponent project will allow water levels within this watershed to be adjusted by means of dams, floodgates, and new stormwater retention wetland areas to increase flood protection and reduce the exposure of major assets and residential areas to severe flooding and flood damage. Several specific projects were identified based on ease of implementation/constructability, overall effectiveness in addressing water quality or flood control for the watershed, and stakeholder input. The specific projects are located at various points within the watershed area and are listed below:

   - <u>Sunrise Highway</u>
     - Construct a stormwater wetland basin
   - <u>Elda Lake</u>
     - Install new control gate;

    - Operate gate prior to major anticipated storms to provide pre-emptive lowering;
    - Construct a new primary spillway culvert;
    - Install a fish ladder
- Southards Pond
    - Install new control gate;
    - Operate gate prior to major anticipated storms to provide pre-emptive lowering;
    - Replace two arch side relief culverts wit new, larger relief culvert;
    - Install natural fish passage channel (preferred over fish ladder due to ecological benefits
- Argyle Lake
    - Install new control gate;
    - Operate gate prior to major anticipated storms to provide pre-emptive lowering;
    - Replace existing relief culvert with larger structure
- Locust Avenue
    - Replace existing 13' wide culvert with new 26' wide culvert

III. Public Water Supply

4. Provide a description of plans to provide water supply.

   The proposed project would not require or provide a water supply.

5. Provide the location of nearby existing or proposed public water supply wells or wellfields within a one half mile radius (2,640 feet) of the project/activity. Provide the name of the supplier(s) of those wells or wellfields. This information should be available from the local health department, State health department or the State environmental agency.

   The area is served with public water. There are four drinking water wells within a half mile radius of the project. They are detailed as follows:

   2564991: System Name: Suffolk County Water Authority
   System ID: NY5110526
   Facility Name: Lafayette Rd Well #3

   2564993: System Name: Suffolk County Water Authority
   System ID: NY5110526
   Facility Name: Lafayette Rd Well #1

   2564992: System Name: Suffolk County Water Authority
   System ID: NY5110526
   Facility Name: Lafayette Rd Well #2

   2631663: System Name: Suffolk County Water Authority

System ID: NY5110526
Facility Name: Lafayette Wellfield, Well #2A

IV. Wastewater and Sewage Disposal

6. Provide a description of plans to handle wastewater and sewage disposal. If the project/activity is to be served by existing public sanitary sewers provide the name of the sewer district.

   The proposed project would not modify current wastewater and sewage disposal activity.

7. Provide a description of plans to handle storm water runoff.

   No work would be within or near the vicinity of identified waterbodies or would modify them directly. Potential impacts to stormwater quality during construction would be minimized.

8. Identify the location, design, size of any on-site recharge basins, dry wells, leaching fields, retention ponds etc.

   Not applicable, there are no on-site recharge basins, dry wells, leaching fields, or retention ponds within the project area.

V. Use, Storage, Transport of Hazardous or Toxic Materials

9. Identify any products listed in Attachment 4, Hazardous Constituents, of the Housing and Urban Development-Environmental Protection Agency Memorandum of Understanding which may be used, stored, transported, or released as a result of the project not related to construction.

   The proposed project would not use, store, transport or release hazardous or toxic materials.

10. Identify the number and capacity of underground storage tanks at the project/activity site. Identify the products and volume to be stored, and the location on the site.

    There are no underground storage tanks associated with this project/activity.

11. Identify the number and capacity of above ground storage tanks at the project/activity site. Identify the products and volume to be stored, and the location on the site.

    There are no aboveground storage tanks associated with this project/activity.

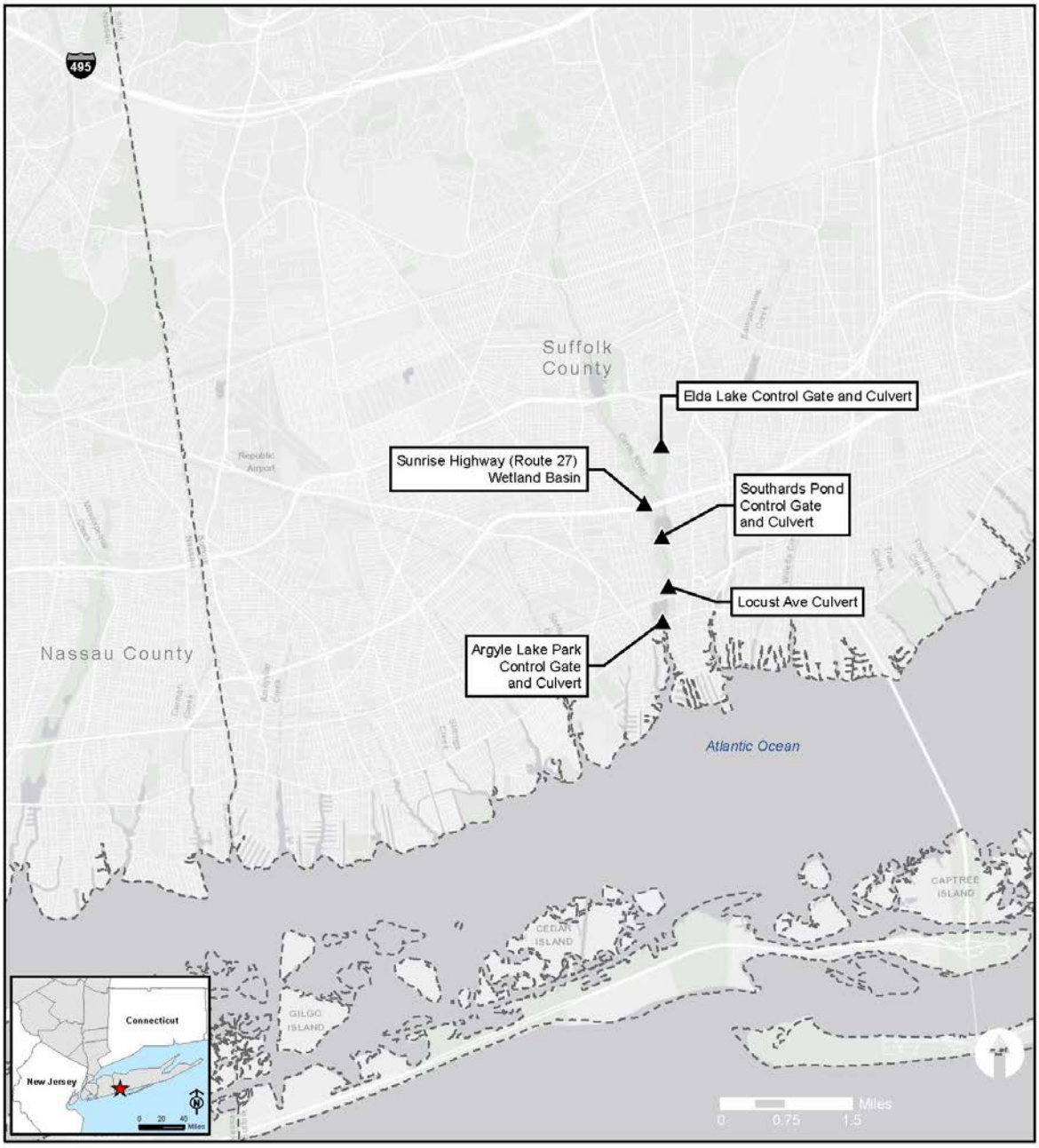

▲ Project Area
--- County Boundary

Figure 1
Regional Location

Carlls River
Watershed Project

Source: ESRI World Light Gray Canvas Base

Louis Berger

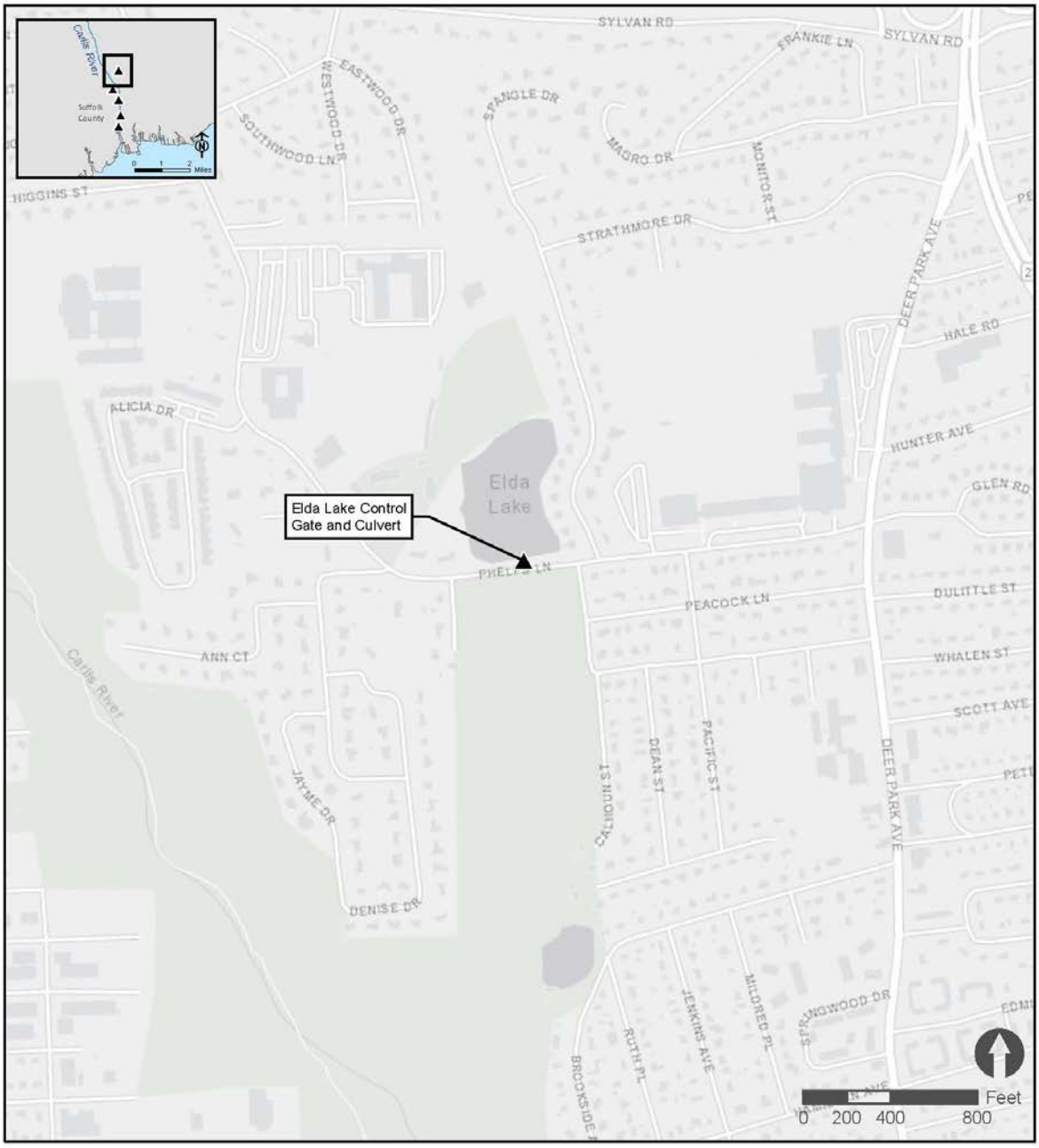

▲ Project Area

Figure 2a

Location of Projects

Carlls River
Watershed Project

Source: ESRI World Light Gray Canvas Base

Louis Berger

▲ Project Area

Figure 2b

Location of Projects

Carlls River
Watershed Project

Source: ESRI World Light Gray Canvas Base

Louis Berger

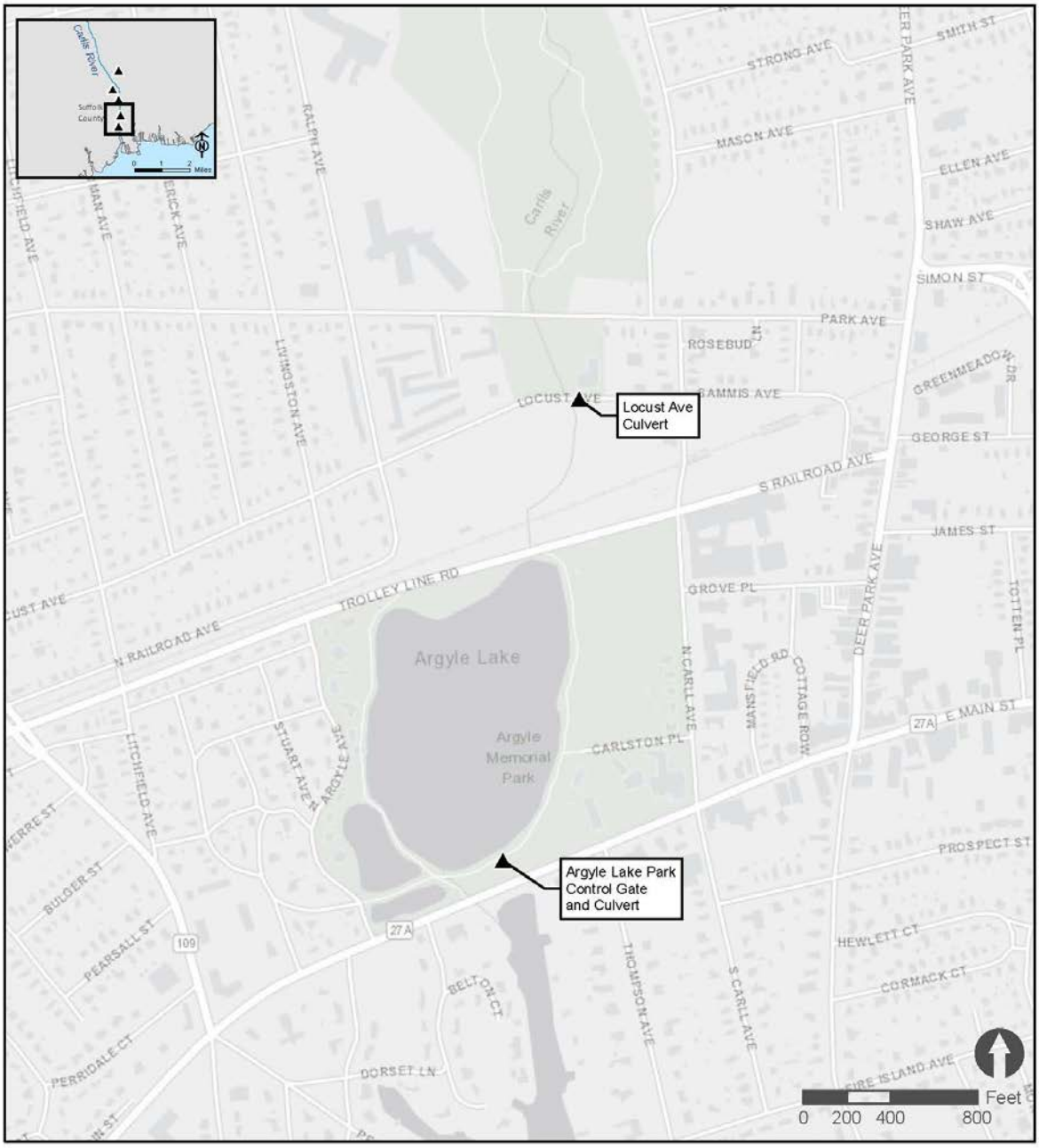

▲ Project Area

Figure 2c

Location of Projects

Carlls River
Watershed Project

Source: ESRI World Light Gray Canvas Base

Louis Berger

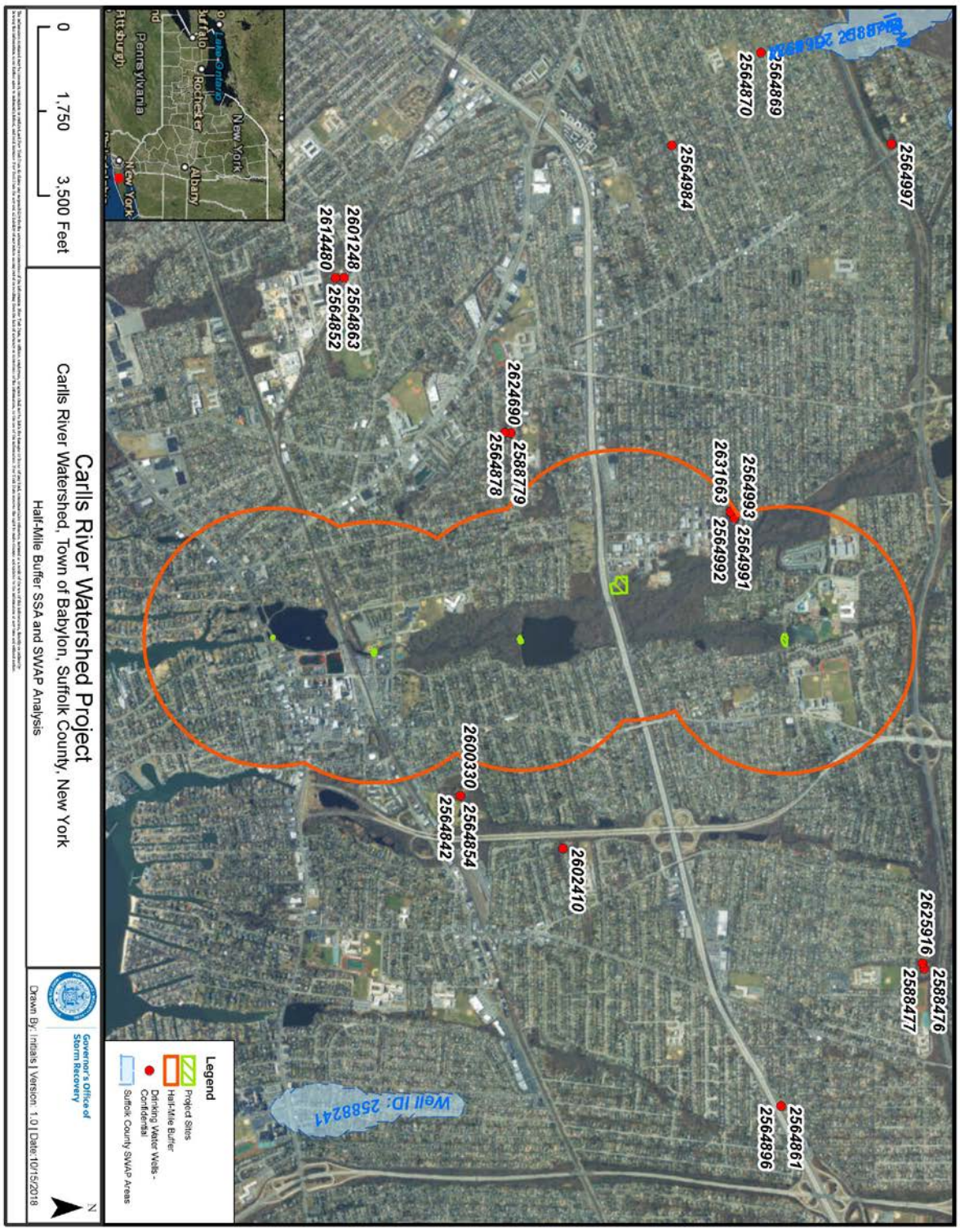
2588476
2588477
2625916
2564997
2564869
2564870
2564984
2564993
2564991
2631663
2564992
2624690
2588779
2564878
2601248
2564863
2614480
2564852
2600330
2564854
2564842
2602410
2564861
2564896
Well ID: 2588241
Legend
Project Sites
Half-Mile Buffer
Drinking Water Wells - Confidential
Suffolk County SWAP Areas
New York
Albany
Rochester
Pennsylvania
Pittsburgh
0
1,750
3,500 Feet
Carlls River Watershed Project
Carlls River Watershed, Town of Babylon, Suffolk County, New York
Half-Mile Buffer SSA and SWAP Analysis
Governor's Office of Storm Recovery
Drawn By: Initials | Version: 1.0 | Date:10/15/2018

UNITED STATES ENVIRONMENTAL PROTECTION AGENCY
REGION 2
290 BROADWAY
NEW YORK, NY 10007-1866

NOV 1 6 2018

James McAllister
Senior Environmental Project Manager
Governor's Office of Storm Recovery
25 Beaver Street
New York, NY 10004

Dear Mr. McAllister:

This is in response to your October 24, 2018 request for a Sole Source Aquifer review of the proposed infrastructure improvements to manage water flow and avert flooding in the Carlls River Watershed in the Town and Village of Babylon. The project is being funded under the Housing and Urban Development (HUD) Community Development Block Grant - Disaster Recovery (CDBG-DR) Program. The project site is located above the Long Island Nassau/Suffolk Aquifer System, designated by EPA as a Sole Source Aquifer on June 21, 1978 (citation 43 FR 26611), and our review has therefore been conducted in accordance with Section 1424(e) of the Safe Drinking Water Act (SDWA).

The project site is located above the Long Island Nassau/Suffolk Aquifer System, designated by EPA as a Sole Source Aquifer on June 21, 1978 (citation 43 FR 26611), and our review has therefore been conducted in accordance with Section 1424(e) of the Safe Drinking Water Act (SDWA). Five separate projects would be implemented.

At the south end of Elda Lake, a new control gate would replace the existing one. The gate would consist of a concrete weir wall with an ogee-style, or rounded, crest. A stainless-steel sluice gate, 36" x 48", would be built into the face of the wall and would slide up and down using a mechanical screw mechanism. The area south of the lake, into which lake water would spill, is entirely wooded. Also, two pre-cast concrete, box culverts, 5'x10' would be installed, replacing three 48"-diameter, severely deteriorated, corrugated metal pipes.

On the north side of Sunrise Highway (NYS Route 27), at Harvard Road in West Babylon, would be constructed a 0.7-acre wetland basin, at a depth of approximately 13 ft below the existing surface and incorporating vegetation that is well suited to be submerged in water some or all of the time. Stormwater would be diverted to this detention/retention basin, avoiding a direct discharge into the existing stream and naturally-occurring wetlands; water would be slowly released to the stream through a control structure.

At Southards Pond, a new control gate would be installed that would allow the water level in the pond to be lowered prior to an expected storm. Two existing culverts would be replaced by an open culvert set at an elevation above the normal pond elevation. Water would flow through these "relief" culverts when the water level in the pond rose above the normal level, allowing more water to move southward and avoiding upstream flooding. Timber pile supports would be needed to support the culvert, due to soil conditions. If preservatives are used on this timber, the applicant should consult with Technical Representative Colin McCown of the American Wood Protection Association (205-733-4077) or Rob Marsh of NYSDEC, Region 1 (631-444-0271), to make sure the supplier and the installer of the timber structures are following recommended practices.

A 13' wide culvert running under Locust Avenue would be replaced by a 26'-wide culvert. The new culvert would be constructed using concrete sheet piles and pre-stressed concrete beams and be designed to carry the weight of the roadway and its vehicular traffic.

At Argyle Lake, the control gate would be of similar construction and operation to that at Elda Lake (above). The culverts would consist of two 36"-diameter HDPE pipes, corrugated on the outside, smooth on the inside.

Based on the information provided it is anticipated that this project will not pose a significant threat to public health or ground water resources and complies with Section 1424(e) of the SDWA. Please be advised that meeting the requirements of 1424(e) does not preclude the need to meet National Environmental Policy Act (NEPA) requirements to address direct, indirect, and cumulative impacts. This review does not constitute a review under Section 309 of the Clean Air Act; EPA therefore reserves the right to review additional environmental documents on this project.

If you have any questions concerning this matter or would like additional information, please feel free to contact Michael Poetzsch of my staff at (212) 637-4147.

Sincerely yours,

for G.M.

Grace Musumeci, Chief
Environmental Review Section

bcc: S. Gould, CWD

G:\deppdiv\SPM\ERS\Staff\Poetzsch\Carlls river mcallister ssa.docx

G:\deppdiv\SPM\ERS\ERSFinal\SSA\NY\Carlls River SSA

LiRo Engineers, Inc.
A LiRo Group Company
Three Aerial Way, Syosset, NY 11791 Telephone 516.938.5476 Facsimile 516.937.5421

April 9, 2019

Matt Accardi
Governor's Office of Storm Recovery
25 Beaver Street, 5th Floor
New York, NY 10004

Re: Soil and Groundwater Investigation
Carlls River Watershed Project
Town of Babylon, NY

Dear Mr. Accardi:

LiRo Engineers, Inc. (LiRo) was retained by the Governor's Office of Storm Recovery (GOSR) to conduct a soil and groundwater investigation as part of the Carlls River Watershed Project in the Town of Babylon, New York (the Site). The limits of the Site are depicted on Figure 1.

It is our understanding that New York State Department of Transportation (NYSDOT) will take ownership of the Site as part of this Project. As a result, the NYSDOT requested that a soil and groundwater investigation be conducted to characterize the material that is expected to remain on the Site and/or be reused in other parts of the Site as part of the proposed project.

Fieldwork

Prior to performing any fieldwork, personnel from LiRo, the subsurface driller (Trinity Environmental, Corp. [Trinity]), and the Town of Babylon conducted Site reconnaissance on February 4, 2019. The purpose of the Site reconnaissance was to clear the overgrown vegetation and to mark out the proposed drilling locations for proposed subsurface sampling.

LiRo conducted the subsurface sampling on February 8, 2019. Seven soil borings (identified as SB-1 thru SB-7) were advanced within the areas where on-Site soil is expected to remain and/or be reused in other parts of the Site. The soil borings were advanced by Trinity with a Geoprobe® mobile drilling unit.

At each soil boring location, LiRo collected one grab sample for volatile organic compound (VOC) analyses, and one composite sample for the additional laboratory analyses (as detailed in the following section). Additionally, two groundwater samples (identified as GW-1 and GW-7) were collected from temporary groundwater monitoring wells installed within soil borings SB-1 and SB-7. Lastly, preliminary waste characterization samples (identified as WC-1, WC-4, and WC-6) were collected from soil boring locations SB-1, SB-4, and SB-6. The sample locations are shown on Figure 1.

The soil was visually inspected for petroleum-related contamination. No visual or olfactory evidence (e.g., staining, odor) of a petroleum release was observed. The soil was also screened for organic vapors with a photoionization detector (PID). Organic vapors were not detected above background levels in any of the soil samples collected during this investigation.

Laboratory Analyses and Results

The soil and groundwater samples were submitted to Chemtech of Mountainside, New Jersey for the following analyses:

- VOCs via United States Environmental Protection Agency (USEPA) Method 8260;
- Semi-volatile organic compounds (SVOCs) via USEPA Method 8270;
- Metals via USEPA Method 6010;
- Pesticides via USEPA Method 8081; and
- Polychlorinated biphenyls (PCB) via USEPA Method 8082.

The waste characterization samples were analyzed for the Resource Conservation Recovery Act (RCRA) characteristics including ignitability, corrosivity, reactivity, and toxicity via the Toxicity Characteristic Leachate Procedure (TCLP) for VOCs, SVOCs, metals, pesticides, and PCBs.

We compared the analytical results of the soil samples to the New York State Department of Environmental Conservation (NYSDEC) Part 375 Unrestricted Use Soil Cleanup Objectives (UUSCOs), Restricted Residential Use SCOs (RRUSCOs), and Commercial Use SCOs (CUSCOs). The analytical results of the groundwater samples were compared to the NYSDEC Division of Water Technical and Operational Guidance Series (TOGS 1.1.1) Ambient Water Quality Standards and Guidance Values (AWQSGV). The laboratory report and the chain of custody from the sampling event are included as Attachment 1.

VOCs in Soil

The analytical results of the VOC analyses in soil are presented on Table 1.

One VOC compound, acetone, was detected at concentrations above its respective UUSCO in five soil samples (SB-1 thru SB-5) collected during this investigation.

Pesticides in Soil

The results of the pesticides analyses are presented on Table 2.

4,4'-DDE and 4,4'-DDT were detected in samples SB-6 and SB-7 at concentrations above their respective UUSCO.

SVOCs, Metals, and PCBs in Soil

The results of the SVOC, metals, and PCB analyses in soil are presented on Tables 3, 4, and 5, respectively.

No SVOCs, metals, or PCBs were detected in the soil samples at concentrations above their respective UUSCOs.

VOCs, Pesticides, and PCBs in Groundwater

The results of the VOC, pesticides, and PCB analyses are presented on Tables 6, 7, and 8, respectively.

No VOCs, pesticides, or PCBs were detected above their respective AWQSGV.

SVOCs in Groundwater

The results of the SVOC analyses are presented on Table 9.

Phenol was detected in both groundwater samples GW-1 and GW-7 at concentrations above its respective AWQSGV.

Metals in Groundwater

The results of the metals analyses are presented on Table 10.

Iron, manganese, and sodium were detected at concentrations above their respective AWQSGV in both the unfiltered (i.e., total metals) and filtered samples (i.e., dissolved metals).

RCRA Characteristics

The results of the RCRA waste characterization analyses (i.e., reactivity, ignitability, corrosivity, and TCLP) are presented on Tables 11 thru 16. No RCRA parameters were observed above the USEPA Maximum Contaminant Levels (MCL) in the samples collected.

Findings

Ten soil samples (including three waste characterization samples), and two groundwater samples were collected as part of this investigation. The samples were collected from parts of the Site where material is expected to remain at the Site and/or be reused in other parts of the Site as part of the Carlls River Watershed project.

The analytical results of the soil samples identified one VOC (acetone), and two pesticides (4,4-DDD, 4,4-DDT) in the subsurface soil at concentrations above their respective NYSDEC Part 375 UUSCOs. The detection of acetone, which is a common laboratory extraction solvent, is likely a laboratory-introduced contaminant and it is our opinion that acetone is not indicative of an on-Site source of contamination. The presence of 4,4-DDT and 4,4-DDD is likely attributable to historical pesticide use for insect and vermin control.

The analytical results of the groundwater samples identified one SVOC (phenol), and three metals (iron, manganese, sodium) at concentrations above their respective AWQSGV. The detection of phenol in the groundwater may be attributable to the use of phenolic compound – containing disinfectants, which are commonly used for the disinfection of horse stables (the Site operated historically as a horse farm while the north adjacent property is an active horse stable)[1]. Additionally, phenol can occur naturally such as in animal wastes and the decomposition of organic wastes[2] . The presence of iron, manganese, and sodium in the groundwater is not likely attributable to an on-Site source as they are naturally occurring in groundwater.

[1] Dwyer, R.M., Disinfecting Equine Facilities, 1995

[2] Toxicological Profile for Phenol, Agency for Toxic Substances and Disease Registry, September 2008

Should you have any questions or require further information, please feel free to contact Maria Drakos at 516-595-2905.

Sincerely,
LiRo Engineers, Inc.

Maria Drakos
Project Scientist

Attachments

Figure

SB-7/GW-7

Soil
4,4-DDE – 0.0062 mg/kg

Groundwater
Phenol – 3.6 ug/L
Iron – 1,840 ug/L

SB-3

Soil
Acetone – 0.43 mg/kg

SB-4/WC-4

Soil
Acetone – 0.054 mg/kg

SB-5

Soil
Acetone – 0.067 mg/kg

SB-2

Soil
Acetone – 0.0512 mg/kg

SB-6/WC-6

Soil
4,4-DDE – 0.0061 mg/kg
4,4-DDT – 0.0104 mg/kg

SB–1/ GW-1/ WC -1

Soil
Acetone – 0.26 mg/kg

Groundwater
Phenol – 4.0 ug/L
Iron – 25,000 ug/L
Manganese – 750 ug/L
Sodium 91,600 ug/L

● - Approximate sample location

Governor's Office of Storm Recovery
Carll's River Watershed Project
Town of Babylon, NY

Figure 1
Sample Location &
Analytical Results Map

Tables

Table 1 - Summary of VOCs in Soil
Carlls River Watershed Project, Town of Babylon, NY

Sample ID	NYSDEC Part 375 Unrestricted Use SCO	NYSDEC Part 375 Restricted Residential Use SCO	NYSDEC Part 375 Commercial Use SCO	SB-1		SB-2		SB-3		SB-4		SB-5		SB-6		SB-7	
Lab Sample Number				K1458-01		K1458-04		K1458-05		K1458-06		K1458-08		K1458-09		K1458-11	
Sampling Date				2/8/2019		2/8/2019		2/8/2019		2/8/2019		2/8/2019		2/8/2019		2/8/2019	
Matrix	SOIL	SOIL	SOIL	SOIL		SOIL		SOIL		SOIL		SOIL		SOIL		SOIL	
Units	mg/kg	mg/kg	mg/kg	mg/kg		mg/kg		mg/kg		mg/kg		mg/kg		mg/kg		mg/kg	
COMPOUND																	
Dichlorodifluoromethane				0.0006	U	0.0006	U	0.0006	U	0.0006	U	0.0006	U	0.0006	U	0.0006	U
Chloromethane				0.0006	U	0.0006	U	0.0006	U	0.0006	U	0.0006	U	0.0006	U	0.0006	U
Vinyl Chloride	0.02	0.9	13	0.0006	U	0.0006	U	0.0006	U	0.0006	U	0.0006	U	0.0006	U	0.0006	U
Bromomethane				0.0011	U	0.0011	U	0.0012	U	0.0012	U	0.0011	U	0.0011	U	0.0012	U
Chloroethane				0.0006	U	0.0006	U	0.0006	U	0.0006	U	0.0006	U	0.0006	U	0.0006	U
Trichlorofluoromethane				0.0006	U	0.0006	U	0.0006	U	0.0006	U	0.0006	U	0.0006	U	0.0006	U
1,1,2-Trichlorotrifluoroethane				0.0006	U	0.0006	U	0.0006	U	0.0006	U	0.0006	U	0.0006	U	0.0006	U
1,1-Dichloroethene	0.33	100	500	0.0006	U	0.0006	U	0.0006	U	0.0006	U	0.0006	U	0.0006	U	0.0006	U
Acrolein				0.0274	U	0.0275	U	0.029	U	0.0297	U	0.0284	U	0.0273	U	0.029	U
Acrylonitrile				0.0027	U	0.0028	U	0.0029	U	0.003	U	0.0028	U	0.0027	U	0.0029	U
Acetone	0.05	100	500	0.0512		0.26		0.43		0.054		0.067		0.0027	U	0.0079	J
Carbon Disulfide				0.0006	U	0.0006	U	0.0006	U	0.0006	U	0.0006	U	0.0006	U	0.0006	U
Methyl tert-butyl Ether	0.93	100	500	0.0006	U	0.0006	U	0.0006	U	0.0006	U	0.0006	U	0.0006	U	0.0006	U
Methyl Acetate				0.0011	U	0.0011	U	0.0012	U	0.0012	U	0.0011	U	0.0011	U	0.0012	U
Methylene Chloride	0.05	100	500	0.008		0.0045	J	0.0006	U	0.004	J	0.0031	J	0.0006	U	0.0036	J
trans-1,2-Dichloroethene	0.19	100	500	0.0006	U	0.0006	U	0.0006	U	0.0006	U	0.0006	U	0.0006	U	0.0006	U
1,1-Dichloroethane	0.27	26	240	0.0006	U	0.0006	U	0.0006	U	0.0006	U	0.0006	U	0.0006	U	0.0006	U
Cyclohexane				0.0044	J	0.0006	U	0.0006	U	0.0006	U	0.0006	U	0.0006	U	0.0006	U
2-Butanone	0.12	100	500	0.0173	J	0.0771		0.1		0.0079	J	0.0074	J	0.0082	U	0.0087	U
Carbon Tetrachloride	0.76	2.4	22	0.0006	U	0.0006	U	0.0006	U	0.0006	U	0.0006	U	0.0006	U	0.0006	U
2,2-Dichloropropane				0.0006	U	0.0006	U	0.0006	U	0.0006	U	0.0006	U	0.0006	U	0.0006	U
cis-1,2-Dichloroethene	0.25	100	500	0.0006	U	0.0006	U	0.0006	U	0.0006	U	0.0006	U	0.0006	U	0.0006	U
Bromochloromethane				0.0006	U	0.0006	U	0.0006	U	0.0006	U	0.0006	U	0.0006	U	0.0006	U
Chloroform	0.37	49	350	0.0006	U	0.0006	U	0.0006	U	0.0006	U	0.0006	U	0.0006	U	0.0006	U
1,1,1-Trichloroethane	0.68	100	500	0.0006	U	0.0006	U	0.0006	U	0.0006	U	0.0006	U	0.0006	U	0.0006	U
Methylcyclohexane				0.039		0.0006	U	0.0006	U	0.0006	U	0.0006	U	0.0006	U	0.0051	J
1,1-Dichloropropene				0.0006	U	0.0006	U	0.0006	U	0.0006	U	0.0006	U	0.0006	U	0.0006	U
Benzene	0.06	4.8	44	0.0006	U	0.0006	U	0.0006	U	0.0006	U	0.0006	U	0.0006	U	0.0006	U
1,2-Dichloroethane	0.02	3.1	30	0.0006	U	0.0006	U	0.0006	U	0.0006	U	0.0006	U	0.0006	U	0.0006	U
Trichloroethene	0.47	21	200	0.0006	U	0.0006	U	0.0006	U	0.0006	U	0.0006	U	0.0006	U	0.0006	U
1,2-Dichloropropane				0.0006	U	0.0006	U	0.0006	U	0.0006	U	0.0006	U	0.0006	U	0.0006	U
Dibromomethane				0.0006	U	0.0006	U	0.0006	U	0.0006	U	0.0006	U	0.0006	U	0.0006	U

Table 1 - Summary of VOCs in Soil
Carlls River Watershed Project, Town of Babylon, NY

Sample ID	NYSDEC Part 375 Unrestricted Use SCO	NYSDEC Part 375 Restricted Residential Use SCO	NYSDEC Part 375 Commercial Use SCO	SB-1		SB-2		SB-3		SB-4		SB-5		SB-6		SB-7	
Lab Sample Number				K1458-01		K1458-04		K1458-05		K1458-06		K1458-08		K1458-09		K1458-11	
Sampling Date				2/8/2019		2/8/2019		2/8/2019		2/8/2019		2/8/2019		2/8/2019		2/8/2019	
Matrix	SOIL	SOIL	SOIL	SOIL		SOIL		SOIL		SOIL		SOIL		SOIL		SOIL	
Units	mg/kg	mg/kg	mg/kg	mg/kg		mg/kg		mg/kg		mg/kg		mg/kg		mg/kg		mg/kg	
COMPOUND																	
Bromodichloromethane				0.0006	U	0.0006	U	0.0006	U	0.0006	U	0.0006	U	0.0006	U	0.0006	U
4-Methyl-2-Pentanone				0.0027	U	0.0028	U	0.0029	U	0.003	U	0.0028	U	0.0027	U	0.0029	U
Toluene	0.7	100	500	0.0006	U	0.0006	U	0.0006	U	0.0006	U	0.0006	U	0.0006	U	0.0006	U
t-1,3-Dichloropropene				0.0006	U	0.0006	U	0.0006	U	0.0006	U	0.0006	U	0.0006	U	0.0006	U
cis-1,3-Dichloropropene				0.0006	U	0.0006	U	0.0006	U	0.0006	U	0.0006	U	0.0006	U	0.0006	U
1,1,2-Trichloroethane				0.0011	U	0.0011	U	0.0012	U	0.0012	U	0.0011	U	0.0011	U	0.0012	U
1,3-Dichloropropane				0.0006	U	0.0006	U	0.0006	U	0.0006	U	0.0006	U	0.0006	U	0.0006	U
2-Chloroethyl Vinyl ether				0.0055	U	0.0055	U	0.0058	U	0.0059	U	0.0057	U	0.0055	U	0.0058	U
2-Hexanone				0.0027	U	0.0028	U	0.0029	U	0.003	U	0.0028	U	0.0027	U	0.0029	U
Dibromochloromethane				0.0006	U	0.0006	U	0.0006	U	0.0006	U	0.0006	U	0.0006	U	0.0006	U
1,2-Dibromoethane				0.0006	U	0.0006	U	0.0006	U	0.0006	U	0.0006	U	0.0006	U	0.0006	U
Tetrachloroethene	1.3	19	150	0.0006	U	0.0006	U	0.0006	U	0.0006	U	0.0006	U	0.0006	U	0.0006	U
Chlorobenzene	1.1	100	500	0.0006	U	0.0006	U	0.0006	U	0.0006	U	0.0006	U	0.0006	U	0.0006	U
1,1,1,2-Tetrachloroethane				0.0006	U	0.0006	U	0.0006	U	0.0006	U	0.0006	U	0.0006	U	0.0006	U
Hexachloroethane				0.0006	U	0.0006	U	0.0006	U	0.0006	U	0.0006	U	0.0006	U	0.0006	U
Ethyl Benzene	1	41	390	0.0068		0.0006	U	0.0006	U	0.0006	U	0.0006	U	0.0006	U	0.0006	U
m/p-Xylenes				0.0066	J	0.0011	U	0.0012	U	0.0012	U	0.0011	U	0.0011	U	0.0022	J
Total Xylenes	0.26	100	500	0.0183		0.0017	U	0.0018	U	0.0018	U	0.0017	U	0.0017	U	0.0043	J
o-Xylene	0.26	100	500	0.0117		0.0006	U	0.0006	U	0.0006	U	0.0006	U	0.0006	U	0.0021	J
Styrene				0.0006	U	0.0006	U	0.0006	U	0.0006	U	0.0006	U	0.0006	U	0.0006	U
Bromoform				0.0016	U	0.0017	U	0.0017	U	0.0018	U	0.0017	U	0.0016	U	0.0017	U
Isopropylbenzene				0.0059		0.0006	U	0.0006	U	0.0006	U	0.0006	U	0.0006	U	0.0006	U
1,1,2,2-Tetrachloroethane				0.0006	U	0.0006	U	0.0006	U	0.0006	U	0.0006	U	0.0006	U	0.0006	U
Bromobenzene				0.0006	U	0.0006	U	0.0006	U	0.0006	U	0.0006	U	0.0006	U	0.0006	U
n-propylbenzene	3.9	100	500	0.0076		0.0006	U	0.0006	U	0.0006	U	0.0006	U	0.0006	U	0.0006	U
2-Chlorotoluene				0.0006	U	0.0006	U	0.0006	U	0.0006	U	0.0006	U	0.0006	U	0.0006	U
1,3,5-Trimethylbenzene	8.4	52	190	0.0574		0.0006	U	0.0006	U	0.0006	U	0.0006	U	0.0006	U	0.0041	J
4-Chlorotoluene				0.0006	U	0.0006	U	0.0006	U	0.0006	U	0.0006	U	0.0006	U	0.0006	U
tert-Butylbenzene	5.9	100	500	0.0006	U	0.0006	U	0.0006	U	0.0006	U	0.0006	U	0.0006	U	0.0006	U
1,2,4-Trimethylbenzene	3.6	52	190	0.0336		0.0006	U	0.0006	U	0.0006	U	0.0006	U	0.0006	U	0.0052	J
sec-Butylbenzene	11	100	500	0.0117		0.0006	U	0.0006	U	0.0006	U	0.0006	U	0.0006	U	0.0012	J
p-Isopropyltoluene				0.0179		0.0006	U	0.0006	U	0.0006	U	0.0006	U	0.0006	U	0.0014	J
1,3-Dichlorobenzene	2.4	49	280	0.0006	U	0.0006	U	0.0006	U	0.0006	U	0.0006	U	0.0006	U	0.0006	U
1,4-Dichlorobenzene	1.8	13	130	0.0006	U	0.0006	U	0.0006	U	0.0006	U	0.0006	U	0.0006	U	0.0006	U

Table 1 - Summary of VOCs in Soil
Carlls River Watershed Project, Town of Babylon, NY

Sample ID	NYSDEC Part 375 Unrestricted Use SCO	NYSDEC Part 375 Restricted Residential Use SCO	NYSDEC Part 375 Commercial Use SCO	SB-1		SB-2		SB-3		SB-4		SB-5		SB-6		SB-7	
Lab Sample Number				**K1458-01**		**K1458-04**		**K1458-05**		**K1458-06**		**K1458-08**		**K1458-09**		**K1458-11**	
Sampling Date				**2/8/2019**		**2/8/2019**		**2/8/2019**		**2/8/2019**		**2/8/2019**		**2/8/2019**		**2/8/2019**	
Matrix	**SOIL**	**SOIL**	**SOIL**	**SOIL**		**SOIL**		**SOIL**		**SOIL**		**SOIL**		**SOIL**		**SOIL**	
Units	**mg/kg**	**mg/kg**	**mg/kg**	**mg/kg**		**mg/kg**		**mg/kg**		**mg/kg**		**mg/kg**		**mg/kg**		**mg/kg**	
COMPOUND																	
n-Butylbenzene	12	100	500	0.0065		0.0006	U	0.0006	U	0.0006	U	0.0006	U	0.0006	U	0.0006	U
1,2-Dichlorobenzene	1.1	100	500	0.0006	U	0.0006	U	0.0006	U	0.0006	U	0.0006	U	0.0006	U	0.0006	U
1,2-Dibromo-3-Chloropropane				0.0055	U	0.0055	U	0.0058	U	0.0059	U	0.0057	U	0.0055	U	0.0058	U
1,2,4-Trichlorobenzene				0.0006	U	0.0006	U	0.0006	U	0.0006	U	0.0006	U	0.0006	U	0.0006	U
1,2,3-Trichlorobenzene				0.0011	U	0.0011	U	0.0012	U	0.0012	U	0.0011	U	0.0011	U	0.0012	U
	Analyte detected above its respective UUSCO																

Table 2 - Summary of Pesticides in Soil
Carlls River Watershed Project, Town of Babylon, NY

Sample ID	NYSDEC Part 375 Unrestricted Use SCO	NYSDEC Part 375 Restricted Residential Use SCO	NYSDEC Part 375 Commercial Use SCO	SB-1		SB-2		SB-3		SB-4		SB-5		SB-6		SB-7	
Lab Sample Number				**K1458-01**		**K1458-04**		**K1458-05**		**K1458-06**		**K1458-08**		**K1458-09**		**K1458-11**	
Sampling Date				**2/8/2019**		**2/8/2019**		**2/8/2019**		**2/8/2019**		**2/8/2019**		**2/8/2019**		**2/8/2019**	
Matrix	**SOIL**	**SOIL**	**SOIL**	**SOIL**		**SOIL**		**SOIL**		**SOIL**		**SOIL**		**SOIL**		**SOIL**	
Units	**mg/kg**	**mg/kg**	**mg/kg**	**mg/kg**		**mg/kg**		**mg/kg**		**mg/kg**		**mg/kg**		**mg/kg**		**mg/kg**	
COMPOUND																	
alpha-BHC	0.02	0.48	3.4	0.0004	U	0.0004	U	0.0004	U	0.0004	U	0.0004	U	0.0004	U	0.0004	U
beta-BHC	0.036	0.36	3	0.0004	U	0.0004	U	0.0004	U	0.0004	U	0.0004	U	0.0004	U	0.0004	U
delta-BHC	0.04	100	500	0.0004	U	0.0004	U	0.0004	U	0.0004	U	0.0004	U	0.0004	U	0.0004	U
gamma-BHC (Lindane)	0.1	1.3	9.2	0.0004	U	0.0004	U	0.0004	U	0.0004	U	0.0004	U	0.0004	U	0.0004	U
Heptachlor	0.042	2.1	15	0.0004	U	0.0004	U	0.0004	U	0.0004	U	0.0004	U	0.0004	U	0.0004	U
Aldrin	0.005	0.097	0.68	0.0004	U	0.0004	U	0.0004	U	0.0009	J	0.0004	U	0.0004	U	0.0004	U
Heptachlor epoxide	NS	NS	NS	0.0004	U	0.0004	U	0.0004	U	0.0004	U	0.0004	U	0.0004	U	0.0004	U
Endosulfan I	2.4	24	200	0.0004	U	0.0004	U	0.0004	U	0.0004	U	0.0004	U	0.0004	U	0.0004	U
Dieldrin	0.005	0.2	1.4	0.0004	U	0.0004	U	0.0004	U	0.0004	U	0.0004	U	0.0004	U	0.0004	U
4,4-DDE	0.0033	8.9	62	0.0016	JP	0.0005	JP	0.0004	U	0.0014	JP	0.0013	JP	**0.0061**		**0.0062**	
Endrin	0.014	11	89	0.0004	U	0.0004	U	0.0004	U	0.0004	U	0.0004	U	0.0004	U	0.0004	U
Endosulfan II	2.4	24	200	0.0004	U	0.0004	U	0.0004	U	0.0004	U	0.0004	U	0.0004	U	0.0004	U
4,4-DDD	0.0033	13	92	0.0004	U	0.0004	U	0.0004	U	0.0004	U	0.0004	U	0.0004	U	0.0024	P
Endosulfan Sulfate	2.4	24	200	0.0004	U	0.0004	U	0.0004	U	0.0004	U	0.0004	U	0.0004	U	0.0004	U
4,4-DDT	0.0033	7.9	47	0.0009	J	0.0004	U	0.0004	U	0.0004	U	0.0006	J	**0.0104**		0.0007	JP
Methoxychlor	NS	NS	NS	0.0004	U	0.0004	U	0.0004	U	0.0004	U	0.0004	U	0.0004	U	0.0004	U
Endrin ketone	NS	NS	NS	0.0004	U	0.0004	U	0.0004	U	0.0004	U	0.0004	U	0.0004	U	0.0004	U
Endrin aldehyde	NS	NS	NS	0.0004	U	0.0004	U	0.0004	U	0.0004	U	0.0004	U	0.0004	U	0.0004	U
alpha-Chlordane	0.094	4.2	24	0.0007	JP	0.0004	U	0.0005	JP	0.0013	JP	0.0004	U	0.0004	U	0.0024	P
gamma-Chlordane	NS	NS	NS	0.0004	JP	0.0004	U	0.0004	U	0.0004	JP	0.0004	U	0.0004	U	0.0011	JP
Toxaphene	NS	NS	NS	0.0036	U	0.0036	U	0.0039	U	0.0039	U	0.0038	U	0.0036	U	0.0039	U
	Analyte detected above its respective UUSCO																

Table 3 - Summary of SVOCs in Soil
Carlls River Watershed Project, Town of Babylon, NY

Sample ID	NYSDEC Part 375 Unrestricted Use SCO	NYSDEC Part 375 Restricted Residential Use SCO	NYSDEC Part 375 Commercial Use SCO	SB-1		SB-2		SB-3		SB-4		SB-5		SB-6		SB-7	
Lab Sample Number				K1458-01		K1458-04		K1458-05		K1458-06		K1458-08		K1458-09		K1458-11	
Sampling Date				2/8/2019		2/8/2019		2/8/2019		2/8/2019		2/8/2019		2/8/2019		2/8/2019	
Matrix	SOIL	SOIL	SOIL	SOIL		SOIL		SOIL		SOIL		SOIL		SOIL		SOIL	
Units	mg/kg	mg/kg	mg/kg	mg/kg		mg/kg		mg/kg		mg/kg		mg/kg		mg/kg		mg/kg	
COMPOUND																	
Benzaldehyde	NS	NS	NS	0.0728	U	0.0367	U	0.0393	U	0.0788	U	0.0754	U	0.0363	U	0.0772	U
Phenol	0.33	100	500	0.0728	U	0.12	J	0.0393	U	0.0788	U	0.0754	U	0.0363	U	0.17	J
bis(2-Chloroethyl)ether	NS	NS	NS	0.0728	U	0.0367	U	0.0393	U	0.0788	U	0.0754	U	0.0363	U	0.0772	U
2-Chlorophenol	NS	NS	NS	0.0728	U	0.0367	U	0.0393	U	0.0788	U	0.0754	U	0.0363	U	0.0772	U
2-Methylphenol	0.33	100	500	0.0728	U	0.0367	U	0.0393	U	0.0788	U	0.0754	U	0.0363	U	0.0772	U
2,2-oxybis(1-Chloropropane)	NS	NS	NS	0.0728	U	0.0367	U	0.0393	U	0.0788	U	0.0754	U	0.0363	U	0.0772	U
Acetophenone	NS	NS	NS	0.0728	U	0.0367	U	0.0393	U	0.0788	U	0.0754	U	0.0363	U	0.0772	U
3+4-Methylphenols	NS	NS	NS	0.0728	U	0.0367	U	0.0393	U	0.0788	U	0.0754	U	0.0363	U	0.0772	U
n-Nitroso-di-n-propylamine	NS	NS	NS	0.0728	U	0.0367	U	0.0393	U	0.0788	U	0.0754	U	0.0363	U	0.0772	U
Hexachloroethane	NS	NS	NS	0.0728	U	0.0367	U	0.0393	U	0.0788	U	0.0754	U	0.0363	U	0.0772	U
Nitrobenzene		15	69	0.0728	U	0.0367	U	0.0393	U	0.0788	U	0.0754	U	0.0363	U	0.0772	U
Isophorone	NS	NS	NS	0.0728	U	0.0367	U	0.0393	U	0.0788	U	0.0754	U	0.0363	U	0.0772	U
2-Nitrophenol	NS	NS	NS	0.0728	U	0.0367	U	0.0393	U	0.0788	U	0.0754	U	0.0363	U	0.0772	U
2,4-Dimethylphenol	NS	NS	NS	0.0728	U	0.0367	U	0.0393	U	0.0788	U	0.0754	U	0.0363	U	0.0772	U
bis(2-Chloroethoxy)methane	NS	NS	NS	0.0728	U	0.0367	U	0.0393	U	0.0788	U	0.0754	U	0.0363	U	0.0772	U
2,4-Dichlorophenol	NS	NS	NS	0.0728	U	0.0367	U	0.0393	U	0.0788	U	0.0754	U	0.0363	U	0.0772	U
Naphthalene	12	100	500	0.0728	U	0.0367	U	0.0393	U	0.0788	U	0.0754	U	0.0363	U	0.0772	U
4-Chloroaniline	NS	NS	NS	0.0728	U	0.0367	U	0.0393	U	0.0788	U	0.0754	U	0.0363	U	0.0772	U
Hexachlorobutadiene	NS	NS	NS	0.0728	U	0.0367	U	0.0393	U	0.0788	U	0.0754	U	0.0363	U	0.0772	U
Caprolactam	NS	NS	NS	0.15	U	0.0733	U	0.0786	U	0.16	U	0.15	U	0.0726	U	0.15	U
4-Chloro-3-methylphenol	NS	NS	NS	0.0728	U	0.0367	U	0.0393	U	0.0788	U	0.0754	U	0.0363	U	0.0772	U
2-Methylnaphthalene	NS	NS	NS	0.0728	U	0.0367	U	0.0393	U	0.0788	U	0.0754	U	0.0363	U	0.0772	U
Hexachlorocyclopentadiene	NS	NS	NS	0.0728	U	0.0367	U	0.0393	U	0.0788	U	0.0754	U	0.0363	U	0.0772	U
2,4,6-Trichlorophenol	NS	NS	NS	0.0728	U	0.0367	U	0.0393	U	0.0788	U	0.0754	U	0.0363	U	0.0772	U
2,4,5-Trichlorophenol	NS	NS	NS	0.0728	U	0.0367	U	0.0393	U	0.0788	U	0.0754	U	0.0363	U	0.0772	U
1,1-Biphenyl	NS	NS	NS	0.0728	U	0.0367	U	0.0393	U	0.0788	U	0.0753	U	0.0363	U	0.0772	U
2-Chloronaphthalene	NS	NS	NS	0.0728	U	0.0367	U	0.0393	U	0.0788	U	0.0754	U	0.0363	U	0.0772	U
2-Nitroaniline	NS	NS	NS	0.0728	U	0.0367	U	0.0393	U	0.0788	U	0.0754	U	0.0363	U	0.0772	U
Dimethylphthalate	NS	NS	NS	0.16	J	0.16	J	0.2	J	0.0788	U	0.19	J	0.16	J	0.2	J
Acenaphthylene	100	100	500	0.0728	U	0.0367	U	0.0393	U	0.0788	U	0.0754	U	0.0363	U	0.0772	U
2,6-Dinitrotoluene	NS	NS	NS	0.0728	U	0.0367	U	0.0393	U	0.0788	U	0.0754	U	0.0363	U	0.0772	U
3-Nitroaniline	NS	NS	NS	0.15	U	0.0733	U	0.0786	U	0.16	U	0.15	U	0.0726	U	0.15	U
Acenaphthene	20	100	500	0.0728	U	0.0367	U	0.0393	U	0.0788	U	0.0754	U	0.0363	U	0.0772	U
2,4-Dinitrophenol	NS	NS	NS	0.58	U	0.29	U	0.31	U	0.63	U	0.6	U	0.29	U	0.62	U
4-Nitrophenol	NS	NS	NS	0.36	U	0.18	U	0.2	U	0.39	U	0.38	U	0.18	U	0.39	U
Dibenzofuran	7	59	350	0.0728	U	0.0367	U	0.0393	U	0.0788	U	0.0754	U	0.0363	U	0.0772	U

Table 3 - Summary of SVOCs in Soil
Carlls River Watershed Project, Town of Babylon, NY

Sample ID	NYSDEC Part 375 Unrestricted Use SCO	NYSDEC Part 375 Restricted Residential Use SCO	NYSDEC Part 375 Commercial Use SCO	SB-1		SB-2		SB-3		SB-4		SB-5		SB-6		SB-7	
Lab Sample Number				K1458-01		K1458-04		K1458-05		K1458-06		K1458-08		K1458-09		K1458-11	
Sampling Date				2/8/2019		2/8/2019		2/8/2019		2/8/2019		2/8/2019		2/8/2019		2/8/2019	
Matrix	SOIL	SOIL	SOIL	SOIL		SOIL		SOIL		SOIL		SOIL		SOIL		SOIL	
Units	mg/kg	mg/kg	mg/kg	mg/kg		mg/kg		mg/kg		mg/kg		mg/kg		mg/kg		mg/kg	
COMPOUND																	
2,4-Dinitrotoluene				0.0728	U	0.0367	U	0.0393	U	0.0788	U	0.0754	U	0.0363	U	0.0772	U
Diethylphthalate				0.0728	U	0.0367	U	0.0393	U	0.0788	U	0.0754	U	0.0363	U	0.0772	U
4-Chlorophenyl-phenylether				0.0728	U	0.0367	U	0.0393	U	0.0788	U	0.0754	U	0.0363	U	0.0772	U
Fluorene	30	100	500	0.0728	U	0.0367	U	0.0393	U	0.0788	U	0.0754	U	0.0363	U	0.0772	U
4-Nitroaniline	NS	NS	NS	0.15	U	0.0733	U	0.0786	U	0.16	U	0.15	U	0.0726	U	0.15	U
4,6-Dinitro-2-methylphenol	NS	NS	NS	0.36	U	0.18	U	0.2	U	0.39	U	0.38	U	0.18	U	0.39	U
n-Nitrosodiphenylamine	NS	NS	NS	0.0728	U	0.0367	U	0.0393	U	0.0788	U	0.0754	U	0.0363	U	0.0772	U
4-Bromophenyl-phenylether	NS	NS	NS	0.0728	U	0.0367	U	0.0393	U	0.0788	U	0.0754	U	0.0363	U	0.0772	U
Hexachlorobenzene	0.33	1.2	6	0.0728	U	0.0367	U	0.0393	U	0.0788	U	0.0754	U	0.0363	U	0.0772	U
Atrazine	NS	NS	NS	0.0728	U	0.0367	U	0.0393	U	0.0788	U	0.0754	U	0.0363	U	0.0772	U
Pentachlorophenol	0.8	6.7	6.7	0.0728	U	0.0367	U	0.0393	U	0.0788	U	0.0754	U	0.0363	U	0.0772	U
Phenanthrene	100	100	500	0.0728	U	0.0367	U	0.0393	U	0.0788	U	0.0754	U	0.0363	U	0.0772	U
Anthracene	100	100	500	0.0728	U	0.0367	U	0.0393	U	0.0788	U	0.0754	U	0.0363	U	0.0772	U
Carbazole	NS	NS	NS	0.0728	U	0.0367	U	0.0393	U	0.0788	U	0.0754	U	0.0363	U	0.0772	U
Di-n-butylphthalate	NS	NS	NS	0.0728	U	0.0367	U	0.0393	U	0.0788	U	0.0754	U	0.0363	U	0.0772	U
Fluoranthene	100	100	500	0.0728	U	0.0367	U	0.0393	U	0.0788	U	0.0754	U	0.0363	U	0.0772	U
Pyrene	100	100	500	0.0728	U	0.0367	U	0.0393	U	0.0788	U	0.0754	U	0.0363	U	0.0772	U
Butylbenzylphthalate	NS	NS	NS	0.0728	U	0.0367	U	0.0393	U	0.0788	U	0.0754	U	0.0363	U	0.0772	U
3,3-Dichlorobenzidine	NS	NS	NS	0.0728	U	0.0367	U	0.0393	U	0.0788	U	0.0754	U	0.0363	U	0.0772	U
Benzo(a)anthracene	1	1	5.6	0.0728	U	0.0367	U	0.0393	U	0.0788	U	0.0754	U	0.0363	U	0.0772	U
Chrysene	1	3.9	56	0.0728	U	0.0367	U	0.0393	U	0.0788	U	0.0754	U	0.0363	U	0.0772	U
Bis(2-ethylhexyl)phthalate	NS	NS	NS	0.0728	U	0.0367	U	0.0393	U	0.0788	U	0.0754	U	0.0363	U	0.0772	U
Di-n-octyl phthalate	NS	NS	NS	0.0728	U	0.0367	U	0.0393	U	0.0788	U	0.0754	U	0.0363	U	0.0772	U
Benzo(b)fluoranthene	1	1	5.6	0.0728	U	0.0367	U	0.0393	U	0.0788	U	0.0754	U	0.0363	U	0.0772	U
Benzo(k)fluoranthene	0.8	3.9	56	0.0728	U	0.0367	U	0.0393	U	0.0788	U	0.0754	U	0.0363	U	0.0772	U
Benzo(a)pyrene	1	1	1	0.0728	U	0.0367	U	0.0393	U	0.0788	U	0.0754	U	0.0363	U	0.0772	U
Indeno(1,2,3-cd)pyrene	0.5	0.5	5.6	0.0728	U	0.0367	U	0.0393	U	0.0788	U	0.0754	U	0.0363	U	0.0772	U
Dibenzo(a,h)anthracene	0.33	0.33	0.56	0.0728	U	0.0367	U	0.0393	U	0.0788	U	0.0754	U	0.0363	U	0.0772	U
Benzo(g,h,i)perylene	100	100	500	0.0728	U	0.0367	U	0.0393	U	0.0788	U	0.0754	U	0.0363	U	0.0772	U
1,2,4,5-Tetrachlorobenzene	NS	NS	NS	0.0728	U	0.0367	U	0.0393	U	0.0788	U	0.0754	U	0.0363	U	0.0772	U
1,4-Dioxane	0.1	13	130	0.15	U	0.0733	U	0.0786	U	0.16	U	0.15	U	0.0726	U	0.15	U
2,3,4,6-Tetrachlorophenol	NS	NS	NS	0.0728	U	0.0367	U	0.0393	U	0.0788	U	0.0754	U	0.0363	U	0.0772	U

Table 4 - Summary of Metals in Soil
Carlls River Watershed Project, Town of Babylon, NY

Sample ID	NYSDEC Part 375 Unrestricted Use SCO	NYSDEC Part 375 Restricted Residential Use SCO	NYSDEC Part 375 Commercial Use SCO	SB-1		SB-2		SB-3		SB-4		SB-5		SB-6		SB-7	
Lab Sample Number				K1458-01		K1458-04		K1458-05		K1458-06		K1458-08		K1458-09		K1458-11	
Sampling Date				2/8/2019		2/8/2019		2/8/2019		2/8/2019		2/8/2019		2/8/2019		2/8/2019	
Matrix	SOIL	SOIL	SOIL	SOIL		SOIL		SOIL		SOIL		SOIL		SOIL		SOIL	
Units	mg/kg	mg/kg	mg/kg	mg/kg		mg/kg		mg/kg		mg/kg		mg/kg		mg/kg		mg/kg	
COMPOUND																	
Aluminum	NS	NS	NS	3290		3210		2150		3760		2140		4990		2730	
Antimony	NS	NS	NS	0.569	U	0.571	U	0.603	U	0.608	U	0.592	U	0.562	U	0.593	U
Arsenic	13	16	16	2.79		1.45		3.12		2.49		1.18		2.05		1.71	
Barium	350	400	400	13.3		11.2		12.1		12.7		7.55		19.7		13.2	
Beryllium	7.2	72	590	0.317		0.288		0.269	J	0.336		0.209	J	0.372		0.271	J
Cadmium	2.5	4.3	9.3	0.068	U	0.068	U	0.072	U	0.073	U	0.071	U	0.067	U	0.071	U
Calcium	NS	NS	NS	12100		1410		1460		6240		7650		1640		13100	
Chromium	NS	NS	NS	5.53		5.16		18.1		6.34		3.83		5.44		5.97	
Cobalt	NS	NS	NS	1.74		1.4		0.852	J	1.84		0.844	J	1.94		1.11	J
Copper	50	270	270	5.22		4.73		3.3		5.32		2.61		5.89		4.56	
Iron	NS	NS	NS	5080		4980		4990		5160		3210		6320		4160	
Lead	63	400	1000	32.3		18.6		17.7		32.1		14.9		25.2		42.9	
Magnesium	NS	NS	NS	5950		968		834		1660		3720		1190		5780	
Manganese	1600	2000	10000	56.7		40.7		21.7		53.5		29.7		52.3		48	
Mercury	0.18	0.81	2.8	0.028		0.022		0.016		0.043		0.022		0.035		0.028	
Nickel	30	310	310	2.88		2.42		1.43	J	3.24		1.79	J	2.98		2.31	
Potassium	NS	NS	NS	163		136		104		187		126		128		161	
Selenium	3.9	180	1500	0.723	J	0.785	J	0.831	J	0.806	J	0.426	J	0.961		0.625	J
Silver	2	180	1500	0.114	U	0.114	U	0.121	U	0.122	U	0.118	U	0.112	U	0.119	U
Sodium	NS	NS	NS	56.8	J	25.5	J	16.8	J	49.6	J	28.3	J	29.5	J	40.9	J
Thallium	NS	NS	NS	0.455	U	0.456	U	0.482	U	0.486	U	0.473	U	0.449	U	0.475	U
Vanadium	NS	NS	NS	11.8		7.52		5.89		10.8		8.07		10.5		8.24	
Zinc	109	10000	10000	19.2		18		15.6		20.3		11.9		23.4		28.3	

Table 5 - Summary of PCBs in Soil
Carlls River Watershed Project, Town of Babylon, NY

Sample ID	NYSDEC Part 375 Unrestricted Use SCO	NYSDEC Part 375 Restricted Residential Use SCO	NYSDEC Part 375 Commercial Use SCO	SB-1		SB-2		SB-3		SB-4		SB-5		SB-6		SB-7	
Lab Sample Number				K1458-01		K1458-04		K1458-05		K1458-06		K1458-08		K1458-09		K1458-11	
Sampling Date				2/8/2019		2/8/2019		2/8/2019		2/8/2019		2/8/2019		2/8/2019		2/8/2019	
Matrix	SOIL	SOIL	SOIL	SOIL		SOIL		SOIL		SOIL		SOIL		SOIL		SOIL	
Units	mg/kg	mg/kg	mg/kg	mg/kg		mg/kg		mg/kg		mg/kg		mg/kg		mg/kg		mg/kg	
COMPOUND																	
Aroclor-1016	0.1	1	1	0.0036	U	0.0036	U	0.0039	U	0.0039	U	0.0038	U	0.0036	U	0.0039	U
Aroclor-1221	0.1	1	1	0.0036	U	0.0036	U	0.0039	U	0.0039	U	0.0038	U	0.0036	U	0.0039	U
Aroclor-1232	0.1	1	1	0.0036	U	0.0036	U	0.0039	U	0.0039	U	0.0038	U	0.0036	U	0.0039	U
Aroclor-1242	0.1	1	1	0.0036	U	0.0036	U	0.0039	U	0.0039	U	0.0038	U	0.0036	U	0.0039	U
Aroclor-1248	0.1	1	1	0.0036	U	0.0036	U	0.0039	U	0.0039	U	0.0038	U	0.0747		0.0039	U
Aroclor-1254	0.1	1	1	0.0036	U	0.0036	U	0.0039	U	0.0039	U	0.0038	U	0.0036	U	0.0039	U
Aroclor-1262	NS	NS	NS	0.0036	U	0.0036	U	0.0039	U	0.0039	U	0.0038	U	0.0036	U	0.0039	U
Aroclor-1268	NS	NS	NS	0.0036	U	0.0036	U	0.0039	U	0.0039	U	0.0038	U	0.0036	U	0.0039	U
Aroclor-1260	0.1	1	1	0.0625	P	0.0036	U	0.0039	U	0.0039	U	0.0038	U	0.0036	U	0.0039	U

Table 6 - Summary of VOCs in Groundwater
Carlls River Watershed Project, Town of Babylon, NY

Sample ID	NY TOGS Class GA AWQSGV	GW-1		GW-7	
Lab Sample Number		**K1458-03**		**K1458-12**	
Sampling Date		**2/8/2019**		**2/8/2019**	
Matrix	**WATER**	**Water**		**Water**	
Units	**ug/l**	**ug/l**		**ug/l**	
COMPOUND					
Dichlorodifluoromethane	5	0.2	U	0.2	U
Chloromethane	5	0.2	U	0.2	U
Vinyl Chloride	2	0.2	U	0.2	U
Bromomethane	5	0.2	U	0.2	U
Chloroethane	5	0.5	U	0.5	U
Trichlorofluoromethane	5	0.2	U	0.2	U
1,1,2-Trichlorotrifluoroethane	5	0.2	U	0.2	U
1,1-Dichloroethene	5	0.2	U	0.2	U
Acrolein	5	3.8	U	3.8	U
Acrylonitrile	5	1	U	1	U
Acetone	50	1	U	3.1	J
Carbon Disulfide	60	0.2	U	0.2	U
Methyl tert-butyl Ether	10	0.5	U	0.5	U
Methyl Acetate	NS	0.5	U	0.5	U
Methylene Chloride	5	0.2	U	0.2	U
trans-1,2-Dichloroethene	5	0.2	U	0.2	U
1,1-Dichloroethane	5	0.2	U	0.2	U
Cyclohexane	NS	0.2	U	0.2	U
2-Butanone	NS	2.5	U	2.5	U
Carbon Tetrachloride	5	0.2	U	0.2	U
2,2-Dichloropropane	5	0.5	U	0.5	U
cis-1,2-Dichloroethene	5	0.2	U	1.3	
Bromochloromethane	5	0.5	U	0.5	U
Chloroform	7	0.2	U	0.2	U
1,1,1-Trichloroethane	5	0.2	U	0.2	U
Methylcyclohexane	NS	0.2	U	0.2	U
1,1-Dichloropropene	NS	0.5	U	0.5	U

Table 6 - Summary of VOCs in Groundwater
Carlls River Watershed Project, Town of Babylon, NY

Sample ID	NY TOGS Class GA AWQSGV	GW-1		GW-7	
Benzene	1	0.2	U	0.2	U
1,2-Dichloroethane	0.6	0.2	U	0.2	U
Trichloroethene	5	0.2	U	0.2	U
1,2-Dichloropropane	1	0.2	U	0.2	U
Dibromomethane	5	0.2	U	0.2	U
Bromodichloromethane	NS	0.2	U	0.2	U
4-Methyl-2-Pentanone	NS	1	U	1	U
Toluene	5	0.2	U	0.2	U
t-1,3-Dichloropropene	NS	0.2	U	0.2	U
cis-1,3-Dichloropropene	NS	0.2	U	0.2	U
1,1,2-Trichloroethane	1	0.2	U	0.2	U
1,3-Dichloropropane	5	0.2	U	0.2	U
2-Chloroethyl Vinyl ether	NS	1	U	1	U
2-Hexanone	NS	2.5	U	2.5	U
Dibromochloromethane	NS	0.2	U	0.2	U
1,2-Dibromoethane	0.0006	0.2	U	0.2	U
Tetrachloroethene	5	0.2	U	0.2	U
Chlorobenzene	5	0.2	U	0.2	U
1,1,1,2-Tetrachloroethane	5	0.2	U	0.2	U
Hexachloroethane	5	0.2	U	0.2	U
Ethyl Benzene	5	0.2	U	0.2	U
m/p-Xylenes	NS	0.4	U	0.4	U
Total Xylenes	5	0.6	U	0.6	U
o-Xylene	5	0.2	U	0.2	U
Styrene	5	0.2	U	0.2	U
Bromoform	NS	0.2	U	0.2	U
Isopropylbenzene	5	0.2	U	0.2	U
1,1,2,2-Tetrachloroethane	5	0.2	U	0.2	U
Bromobenzene	5	0.2	U	0.2	U
n-propylbenzene	5	0.2	U	0.2	U
2-Chlorotoluene	5	0.2	U	0.2	U
1,3,5-Trimethylbenzene	5	0.2	U	0.2	U

Table 6 - Summary of VOCs in Groundwater
Carlls River Watershed Project, Town of Babylon, NY

Sample ID	NY TOGS Class GA AWQSGV	GW-1		GW-7	
4-Chlorotoluene	5	0.2	U	0.2	U
tert-Butylbenzene	5	0.2	U	0.2	U
1,2,4-Trimethylbenzene	5	0.2	U	0.2	U
sec-Butylbenzene	5	0.2	U	0.2	U
p-Isopropyltoluene	5	0.2	U	0.2	U
1,3-Dichlorobenzene	3	0.2	U	0.2	U
1,4-Dichlorobenzene	3	0.2	U	0.2	U
n-Butylbenzene	5	0.2	U	0.2	U
1,2-Dichlorobenzene	3	0.2	U	0.2	U
1,2-Dibromo-3-Chloropropane	0.04	0.2	U	0.2	U
1,2,4-Trichlorobenzene	5	0.2	U	0.2	U
1,2,3-Trichlorobenzene	5	0.2	U	0.2	U

Table 7 - Summary of Pesticides in Groundwater
Carlls River Watershed Project, Town of Babylon, NY

Sample ID	NY TOGS Class GA AWQSGV	GW-1		GW-7	
Lab Sample Number		**K1458-03**		**K1458-12**	
Sampling Date		**2/8/2019**		**2/8/2019**	
Matrix	**WATER**	**WATER**		**WATER**	
Units	**ug/l**	**ug/l**		**ug/l**	
COMPOUND					
alpha-BHC	0.01	0.01	U	0.0111	U
beta-BHC	0.04	0.01	U	0.0111	U
delta-BHC	0.04	0.01	U	0.0111	U
gamma-BHC (Lindane)	0.05	0.01	U	0.0111	U
Heptachlor	0.04	0.01	U	0.0111	U
Aldrin	ND	0.01	U	0.0111	U
Heptachlor epoxide	0.03	0.01	U	0.0111	U
Endosulfan I	NS	0.01	U	0.0111	U
Dieldrin	0.004	0.01	U	0.0111	U
4,4-DDE	0.2	0.01	U	0.008	J
Endrin	ND	0.01	U	0.0111	U
Endosulfan II	NS	0.01	U	0.0111	U
4,4-DDD	0.3	0.01	U	0.038	J
Endosulfan Sulfate	NS	0.01	U	0.0111	U
4,4-DDT	0.2	0.01	U	0.0111	U
Methoxychlor	35	0.01	U	0.0111	U
Endrin ketone	5	0.01	U	0.0111	U
Endrin aldehyde	5	0.01	U	0.0111	U
alpha-Chlordane	NS	0.01	U	0.0111	U
gamma-Chlordane	NS	0.01	U	0.0111	U
Toxaphene	0.06	0.1	U	0.111	U

Table 8 - Summary of PCBs in Soil
Carlls River Watershed Project, Town of Babylon, NY

Sample ID	NY TOGS Class GA AWQSGV	GW-1		GW-7	
Lab Sample Number		**K1458-03**		**K1458-12**	
Sampling Date		**2/8/2019**		**2/8/2019**	
Matrix	**WATER**	**WATER**		**WATER**	
Units	**ug/l**	**ug/l**		**ug/l**	
COMPOUND					
Aroclor-1016	0.09	0.1	U	0.1	U
Aroclor-1221	0.09	0.1	U	0.1	U
Aroclor-1232	0.09	0.1	U	0.1	U
Aroclor-1242	0.09	0.1	U	0.1	U
Aroclor-1248	0.09	0.1	U	0.1	U
Aroclor-1254	0.09	0.1	U	0.1	U
Aroclor-1262	NS	0.1	U	0.1	U
Aroclor-1268	NS	0.1	U	0.1	U
Aroclor-1260	0.09	0.1	U	0.1	U

Table 9 - Summary of SVOCs in Groundwater
Carlls River Watershed Project, Town of Babylon, NY

Sample ID	NY TOGS Class GA AWQSGV	GW-1		GW-7		
Lab Sample Number		K1458-03		K1458-12		
Sampling Date		2/8/2019		2/8/2019		
Matrix	WATER	Water		Water		
Units	ug/l	ug/l		ug/l		
COMPOUND						
Benzaldehyde		1.1	U	1	U	
Phenol	1	4	J	3.6	J	
bis(2-Chloroethyl)ether	1	1.1	U	1	U	
2-Chlorophenol	NS	1.1	U	1	U	
2-Methylphenol	NS	1.1	U	1	U	
2,2-oxybis(1-Chloropropane)	5	1.1	U	1	U	
Acetophenone	NS	1.1	U	1	U	
3+4-Methylphenols	NS	1.1	U	1	U	
n-Nitroso-di-n-propylamine	NS	1.1	U	1	U	
Hexachloroethane	5	1.1	U	1	U	
Nitrobenzene	0.4	1.1	U	1	U	
Isophorone	NS	1.1	U	1	U	
2-Nitrophenol	NS	1.1	U	1	U	
2,4-Dimethylphenol	1	1.1	U	1	U	
bis(2-Chloroethoxy)methane	5	1.1	U	1	U	
2,4-Dichlorophenol	1	1.1	U	1	U	
Naphthalene	NS	1.1	U	1	U	
4-Chloroaniline	5	1.1	U	1	U	
Hexachlorobutadiene	0.5	1.1	U	1	U	
Caprolactam	NS	1.1	U	1	U	
4-Chloro-3-methylphenol	NS	1.1	U	1	U	
2-Methylnaphthalene	NS	1.1	U	1	U	
Hexachlorocyclopentadiene	5	1.1	U	1	U	
2,4,6-Trichlorophenol	NS	1.1	U	1	U	
2,4,5-Trichlorophenol	NS	1.1	U	1	U	
1,1-Biphenyl	5	1.1	U	1	U	
2-Chloronaphthalene	NS	1.1	U	1	U	
2-Nitroaniline	5	1.1	U	1	U	

Table 9 - Summary of SVOCs in Groundwater
Carlls River Watershed Project, Town of Babylon, NY

Sample ID	NY TOGS Class GA AWQSGV	GW-1		GW-7		
Dimethylphthalate	NS	2.9	J	2.8	J	
Acenaphthylene	NS	1.1	U	1	U	
2,6-Dinitrotoluene	5	1.1	U	1	U	
3-Nitroaniline	5	1.1	U	1	U	
Acenaphthene	NS	1.1	U	1	U	
2,4-Dinitrophenol	1	8.9	U	8	U	
4-Nitrophenol	NS	5.6	U	5	U	
Dibenzofuran	NS	1.1	U	1	U	
2,4-Dinitrotoluene	5	1.1	U	1	U	
Diethylphthalate	NS	1.1	U	1	U	
4-Chlorophenyl-phenylether	NS	1.1	U	1	U	
Fluorene	NS	1.1	U	1	U	
4-Nitroaniline	5	2.2	U	2	U	
4,6-Dinitro-2-methylphenol	NS	2.2	U	2	U	
n-Nitrosodiphenylamine	NS	1.1	U	1	U	
4-Bromophenyl-phenylether	NS	1.1	U	1	U	
Hexachlorobenzene	0.04	1.1	U	1	U	
Atrazine	7.5	1.1	U	1	U	
Pentachlorophenol	1	1.1	U	1	U	
Phenanthrene	NS	1.1	U	1	U	
Anthracene	NS	1.1	U	1	U	
Carbazole	NS	1.1	U	1	U	
Di-n-butylphthalate	50	1.1	U	1	U	
Fluoranthene	NS	1.1	U	1	U	
Pyrene	NS	1.1	U	1	U	
Butylbenzylphthalate	NS	1.1	U	1	U	
3,3-Dichlorobenzidine	5	1.1	U	1	U	
Benzo(a)anthracene	NS	1.1	U	1	U	
Chrysene	NS	1.1	U	1	U	
Bis(2-ethylhexyl)phthalate	5	1.1	U	1	U	
Di-n-octyl phthalate	NS	1.1	U	1	U	
Benzo(b)fluoranthene	NS	1.1	U	1	U	
Benzo(k)fluoranthene	NS	1.1	U	1	U	

Table 9 - Summary of SVOCs in Groundwater
Carlls River Watershed Project, Town of Babylon, NY

Sample ID	NY TOGS Class GA AWQSGV	GW-1		GW-7		
Benzo(a)pyrene	ND	1.1	U	1	U	
Indeno(1,2,3-cd)pyrene	NS	1.1	U	1	U	
Dibenzo(a,h)anthracene	NS	1.1	U	1	U	
Benzo(g,h,i)perylene	NS	1.1	U	1	U	
1,2,4,5-Tetrachlorobenzene	5	1.1	U	1	U	
1,4-Dioxane	NS	5.6	U	5	U	
2,3,4,6-Tetrachlorophenol	NS	1.1	U	1	U	
	Analyte detected above its AWQSGV					

Table 10 - Summary of Metals in Groundwater
Carlls River Watershed Project, Town of Babylon, NY

Sample ID	NY TOGS Class GA AWQSGV	GW-1 (Total)		GW-7 (Total)		GW-1 (Dissolved)		GW-7 (Dissolved)	
Lab Sample Number		**K1458-17**		**K1458-18**		**K1458-03**		**K1458-12**	
Sampling Date		**2/8/2019**		**2/8/2019**		**2/8/2019**		**2/8/2019**	
Matrix	**WATER**	**Water**		**Water**		**Water**		**Water**	
Units	**ug/l**	**ug/l**		**ug/l**		**ug/l**		**ug/l**	
COMPOUND									
Aluminum		99.1		1330		31.6	J	28.1	J
Antimony	3	6.25	U	6.25	U	6.25	U	6.25	U
Arsenic	25	2.5	U	3.25	J	2.5	U	2.5	U
Barium	1000	144		14.5	J	163		12.5	U
Beryllium	NS	0.75	U	0.75	U	0.75	U	0.75	U
Cadmium	5	0.75	U	0.75	U	0.75	U	0.75	U
Calcium	NS	73300		29100		80500		19300	
Chromium	50	1.25	U	6.49		1.25	U	1.34	J
Cobalt	NS	3.75	U	3.75	U	3.75	U	3.75	U
Copper	200	2.43	J	2.22	J	2.5	U	2.5	U
Iron	300	**25400**		**2880**		**25000**		**1840**	
Lead	25	1.5	U	21.2		1.5	U	2.01	J
Magnesium	NS	18500		3670		18900		2320	
Manganese	300	**676**		143		**750**		108	
Mercury	0.7	0.1	U	0.1	U	0.1	U	0.1	U
Nickel	100	5	U	5	U	5	U	5	U
Potassium	NS	5280		2810		5920		1860	
Selenium	10	5.65	J	5	U	5	U	5	U
Silver	50	1.25	U	1.25	U	1.25	U	1.25	U
Sodium	20000	**84400**		19500		**91600**		12100	
Thallium	NS	5	U	5	U	5	U	5	U
Vanadium	NS	5	U	5	U	5	U	5	U
Zinc	NS	14.2	J	28		5	U	5	U
	Analyte detected above its AWQSGV								

Table 11 - Summary of RCRA Characteristics
Carlls River Watershed Project, Town of Babylon, NY

Sample ID	**WC-1**		**WC-4**		**WC-6**	
Lab Sample Number	**K1458-02**		**K1458-07**		**K1458-10**	
Sampling Date	**2/8/2019**		**2/8/2019**		**2/8/2019**	
Matrix	**SOIL**		**SOIL**		**SOIL**	
Units	**mg/kg**		**mg/kg**		**mg/kg**	
COMPOUND						
Reactive Sulfide	10	U	10	U	**59**	
Reactive Cyanide	0.025	U	0.025	U	0.025	U
Ignitability	**No**		**No**		**No**	
Corrosivity	**7.88**		**10.2**		**7.29**	

Table 12 - Summary of TCLP VOC
Carlls River Watershed Project, Town of Babylon, NY

Sample ID	TCLP Maximum Contaminant Concentrations (40 CFR 261 6/96)	WC-1		WC-4		WC-6	
Lab Sample Number		**K1458-02**		**K1458-07**		**K1458-10**	
Sampling Date		**2/8/2019**		**2/8/2019**		**2/8/2019**	
Matrix	**TCLP**	**TCLP**		**TCLP**		**TCLP**	
Units	**mg/L**	**mg/l**		**mg/l**		**mg/l**	
COMPOUND							
Dichlorodifluoromethane	NS	0.0005	U	0.0005	U	0.0005	U
Chloromethane	NS	0.0005	U	0.0005	U	0.0005	U
Vinyl Chloride	0.2	0.0005	U	0.0005	U	0.0005	U
Bromomethane	NS	0.0005	U	0.0005	U	0.0005	U
Chloroethane	NS	0.0005	U	0.0005	U	0.0005	U
Trichlorofluoromethane	NS	0.0005	U	0.0005	U	0.0005	U
1,1-Dichloroethene	0.7	0.0005	U	0.0005	U	0.0005	U
Acetone	NS	0.0145	J	0.0173	J	0.0142	J
Methyl tert-butyl Ether	NS	0.0005	U	0.0005	U	0.0005	U
Methylene Chloride	NS	0.0304		0.31	D	0.0169	
trans-1,2-Dichloroethene	NS	0.0005	U	0.0005	U	0.0005	U
1,1-Dichloroethane	NS	0.0005	U	0.0005	U	0.0005	U
2-Butanone	200	0.0025	U	0.0025	U	0.0025	U
Carbon Tetrachloride	0.5	0.0005	U	0.0005	U	0.0005	U
cis-1,2-Dichloroethene	NS	0.0005	U	0.0005	U	0.0005	U
Bromochloromethane	NS	0.0005	U	0.0005	U	0.0005	U
Chloroform	6	0.0005	U	0.0005	U	0.0005	U
1,1,1-Trichloroethane	NS	0.0008	U	0.0008	U	0.0008	U
Benzene	0.5	0.0005	U	0.0005	U	0.0005	U
1,2-Dichloroethane	0.5	0.0008	U	0.0008	U	0.0008	U
Trichloroethene	0.5	0.0005	U	0.0005	U	0.0005	U
1,2-Dichloropropane	NS	0.0005	U	0.0005	U	0.0005	U
Bromodichloromethane	NS	0.0005	U	0.0005	U	0.0005	U
Toluene	NS	0.0005	U	0.0005	U	0.0005	U
1,1,2-Trichloroethane	NS	0.0005	U	0.0005	U	0.0005	U

Table 12 - Summary of TCLP VOC
Carlls River Watershed Project, Town of Babylon, NY

Sample ID	TCLP Maximum Contaminant Concentrations (40 CFR 261 6/96)	WC-1		WC-4		WC-6	
Dibromochloromethane	NS	0.0005	U	0.0005	U	0.0005	U
1,2-Dibromoethane	NS	0.0005	U	0.0005	U	0.0005	U
Tetrachloroethene	0.7	0.0005	U	0.0005	U	0.0005	U
Chlorobenzene	100	0.0005	U	0.0005	U	0.0005	U
Ethyl Benzene	NS	0.0005	U	0.0005	U	0.0005	U
Styrene	NS	0.0005	U	0.0005	U	0.0005	U
Bromoform	NS	0.0005	U	0.0005	U	0.0005	U
Isopropylbenzene	NS	0.0005	U	0.0005	U	0.0005	U
1,1,2,2-Tetrachloroethane	NS	0.0005	U	0.0005	U	0.0005	U
1,3-Dichlorobenzene	NS	0.0005	U	0.0005	U	0.0005	U
1,4-Dichlorobenzene	7.5	0.0005	U	0.0005	U	0.0005	U
1,2-Dichlorobenzene	NS	0.0005	U	0.0005	U	0.0005	U
1,2-Dibromo-3-Chloropropane	NS	0.002	U	0.002	U	0.002	U
1,2,4-Trichlorobenzene	NS	0.0005	U	0.0005	U	0.0005	U
1,2,3-Trichlorobenzene	NS	0.0005	U	0.0005	U	0.0005	U

Table 13 - Summary of TCLP VOC
Carlls River Watershed Project, Town of Babylon, NY

Sample ID	TCLP Maximum Contaminant Concentrations (40 CFR 261 6/96)	WC-1		WC-4		WC-6	
Lab Sample Number		**K1458-02**		**K1458-07**		**K1458-10**	
Sampling Date		**2/8/2019**		**2/8/2019**		**2/8/2019**	
Matrix	**TCLP**	**TCLP**		**TCLP**		**TCLP**	
Units	**mg/L**	**mg/l**		**mg/l**		**mg/l**	
COMPOUND							
Phenol	NS	0.01	U	0.01	U	0.01	U
bis(2-Chloroethyl)ether	NS	0.01	U	0.01	U	0.01	U
2-Chlorophenol	NS	0.01	U	0.01	U	0.01	U
2-Methylphenol	200	0.01	U	0.01	U	0.01	U
2,2-oxybis(1-Chloropropane)	NS	0.01	U	0.01	U	0.01	U
3+4-Methylphenols	NS	0.01	U	0.01	U	0.01	U
n-Nitroso-di-n-propylamine	NS	0.01	U	0.01	U	0.01	U
Hexachloroethane	3	0.01	U	0.01	U	0.01	U
Nitrobenzene	2	0.01	U	0.01	U	0.01	U
Isophorone	NS	0.01	U	0.01	U	0.01	U
2-Nitrophenol	NS	0.01	U	0.01	U	0.01	U
2,4-Dimethylphenol	NS	0.01	U	0.01	U	0.01	U
bis(2-Chloroethoxy)methane	NS	0.01	U	0.01	U	0.01	U
2,4-Dichlorophenol	NS	0.01	U	0.01	U	0.01	U
Naphthalene	NS	0.01	U	0.01	U	0.01	U
4-Chloroaniline	NS	0.01	U	0.01	U	0.01	U
Hexachlorobutadiene	0.5	0.01	U	0.01	U	0.01	U
4-Chloro-3-methylphenol	NS	0.01	U	0.01	U	0.01	U
2-Methylnaphthalene	NS	0.01	U	0.01	U	0.01	U
Hexachlorocyclopentadiene	NS	0.01	U	0.01	U	0.01	U
2,4,6-Trichlorophenol	2	0.01	U	0.01	U	0.01	U
2,4,5-Trichlorophenol	400	0.01	U	0.01	U	0.01	U
2-Chloronaphthalene	NS	0.01	U	0.01	U	0.01	U
2-Nitroaniline	NS	0.01	U	0.01	U	0.01	U
Dimethylphthalate	NS	0.01	U	0.01	U	0.01	U
Acenaphthylene	NS	0.01	U	0.01	U	0.01	U
2,6-Dinitrotoluene	NS	0.01	U	0.01	U	0.01	U

Table 13 - Summary of TCLP VOC
Carlls River Watershed Project, Town of Babylon, NY

Sample ID	TCLP Maximum Contaminant Concentrations (40 CFR 261 6/96)	WC-1		WC-4		WC-6	
3-Nitroaniline	NS	0.01	U	0.01	U	0.01	U
Acenaphthene	NS	0.01	U	0.01	U	0.01	U
2,4-Dinitrophenol	NS	0.08	U	0.08	U	0.08	U
4-Nitrophenol	NS	0.05	U	0.05	U	0.05	U
Dibenzofuran	NS	0.01	U	0.01	U	0.01	U
2,4-Dinitrotoluene	0.13	0.01	U	0.01	U	0.01	U
Diethylphthalate	NS	0.01	U	0.01	U	0.01	U
4-Chlorophenyl-phenylether	NS	0.01	U	0.01	U	0.01	U
Fluorene	NS	0.01	U	0.01	U	0.01	U
4-Nitroaniline	NS	0.02	U	0.02	U	0.02	U
4,6-Dinitro-2-methylphenol	NS	0.02	U	0.02	U	0.02	U
n-Nitrosodiphenylamine	NS	0.01	U	0.01	U	0.01	U
4-Bromophenyl-phenylether	NS	0.01	U	0.01	U	0.01	U
Hexachlorobenzene	0.13	0.01	U	0.01	U	0.01	U
Pentachlorophenol	100	0.01	U	0.01	U	0.01	U
Phenanthrene	NS	0.01	U	0.01	U	0.01	U
Anthracene	NS	0.01	U	0.01	U	0.01	U
Di-n-butylphthalate	NS	0.01	U	0.01	U	0.01	U
Fluoranthene	NS	0.01	U	0.01	U	0.01	U
Pyrene	NS	0.01	U	0.01	U	0.01	U
Butylbenzylphthalate	NS	0.01	U	0.01	U	0.01	U
3,3-Dichlorobenzidine	NS	0.01	U	0.01	U	0.01	U
Benzo(a)anthracene	NS	0.01	U	0.01	U	0.01	U
Chrysene	NS	0.01	U	0.01	U	0.01	U
Bis(2-ethylhexyl)phthalate	NS	0.01	U	0.01	U	0.01	U
Di-n-octyl phthalate	NS	0.01	U	0.01	U	0.01	U
Benzo(b)fluoranthene	NS	0.01	U	0.01	U	0.01	U
Benzo(k)fluoranthene	NS	0.01	U	0.01	U	0.01	U
Benzo(a)pyrene	NS	0.01	U	0.01	U	0.01	U
Indeno(1,2,3-cd)pyrene	NS	0.01	U	0.01	U	0.01	U
Dibenzo(a,h)anthracene	NS	0.01	U	0.01	U	0.01	U
Benzo(g,h,i)perylene	NS	0.01	U	0.01	U	0.01	U

Table 14 - Summary of TCLP Metals
Carlls River Watershed Project, Town of Babylon, NY

Sample ID	TCLP Maximum Contaminant Concentrations (40 CFR 261 6/96)	WC-1		WC-4		WC-6	
Lab Sample Number		**K1458-02**		**K1458-07**		**K1458-10**	
Sampling Date		**2/8/2019**		**2/8/2019**		**2/8/2019**	
Matrix	**TCLP**	**TCLP**		**TCLP**		**TCLP**	
Units	**mg/L**	**mg/l**		**mg/l**		**mg/l**	
COMPOUND							
Aluminum	NS	0.228	J	0.952		1.17	
Antimony	NS	0.0625	U	0.0625	U	0.0625	U
Arsenic	5	0.025	U	0.025	U	0.025	U
Barium	100	0.498	J	0.417	J	0.471	J
Beryllium	NS	0.0075	U	0.0075	U	0.0075	U
Cadmium	1	0.0075	U	0.0075	U	0.0075	U
Calcium	NS	241		299		86.4	
Chromium	5	0.0125	U	0.013	J	0.0125	U
Cobalt	NS	0.0375	U	0.0375	U	0.0375	U
Copper	NS	0.025	U	0.025	U	0.025	U
Iron	NS	0.621		0.544		0.742	
Lead	5	0.0933		0.11		0.0608	
Magnesium	NS	112		32		35.9	
Manganese	NS	0.809		1.36		0.752	
Mercury	0.2	0.001	U	0.001	U	0.001	U
Nickel	NS	0.05	U	0.05	U	0.05	U
Potassium	NS	3.56	J	4.38	J	1.17	J
Selenium	1	0.05	U	0.05	U	0.05	U
Silver	5	0.0125	U	0.0125	U	0.0125	U
Thallium	NS	0.05	U	0.05	U	0.05	U
Vanadium	NS	0.05	U	0.05	U	0.05	U
Zinc	NS	0.172	J	0.204		0.132	J

Table 15 - Summary of TCLP Pesticides
Carlls River Watershed Project, Town of Babylon, NY

Sample ID	TCLP Maximum Contaminant Concentrations (40 CFR 261 6/96)	WC-1		WC-4		WC-6	
Lab Sample Number		**K1458-02**		**K1458-07**		**K1458-10**	
Sampling Date		**2/8/2019**		**2/8/2019**		**2/8/2019**	
Matrix	**TCLP**	**TCLP**		**TCLP**		**TCLP**	
Units	**mg/L**	**mg/l**		**mg/l**		**mg/l**	
COMPOUND							
gamma-BHC (Lindane)	0.4	0.0001	U	0.0001	U	0.0001	U
Heptachlor	0.008	0.0001	U	0.0001	U	0.0001	U
Heptachlor epoxide	0.008	0.0001	U	0.0001	U	0.0001	U
Endrin	0.02	0.0001	U	0.0001	U	0.0001	U
Methoxychlor	10	0.0001	U	0.0001	U	0.0001	U
Toxaphene	0.5	0.001	U	0.001	U	0.001	U

Table 16 - Summary of TCLP PCB
Carlls River Watershed Project, Town of Babylon, NY

Sample ID	TCLP Maximum Contaminant Concentrations (40 CFR 261 6/96)	WC-1		WC-4		WC-6	
Lab Sample Number		**K1458-02**		**K1458-07**		**K1458-10**	
Sampling Date		**2/8/2019**		**2/8/2019**		**2/8/2019**	
Matrix	**TCLP**	**TCLP**		**TCLP**		**TCLP**	
Units	**mg/L**	**mg/l**		**mg/l**		**mg/l**	
COMPOUND							
Aroclor-1016	NS	0.001	U	0.001	U	0.001	U
Aroclor-1221	NS	0.001	U	0.001	U	0.001	U
Aroclor-1232	NS	0.001	U	0.001	U	0.001	U
Aroclor-1242	NS	0.001	U	0.001	U	0.001	U
Aroclor-1248	NS	0.001	U	0.001	U	0.001	U
Aroclor-1254	NS	0.001	U	0.001	U	0.001	U
Aroclor-1260	NS	0.001	U	0.001	U	0.001	U

Qualifiers

U - The compound was not detected at the indicated concentration.
N (Organics) - Presumptive Evidence of a Compound
N (Inorganics) - The matrix spike recovery was outside control limits
J - Data indicates the presence of a compound that meets the identification criteria. The result is less than the quantitation limit but greater than MDL. The concentration given is an approximate value.
B - The analyte was found in the laboratory blank as well as the sample. This indicates possible laboratory contamination of the environmental sample.
P -For dual column analysis, the percent difference between the quantitated concentrations on the two columns is greater than 40%.
* (Organics) - For dual column analysis, the lowest quantitated concentration is being reported due to coeluting interference.
* (Inorganics) - The sample/duplicate %RPD was above the control limit.
E (Organics) - Indicates the analyte ‘s concentration exceeds the calibrated range of the instrument for that specific analysis.
E (Inorganics) - The reported value is estimated because of the presence of interference.
D - The reported value is from a secondary analysis with a dilution factor. The original analysis exceeded the calibration range.
Q -Indicates LCS control criteria did not meet requirements.
NR - Not analyzed
NS - No standard
ug/L - micrograms per liter
mg/kg - milligrams per kilogram

Attachment 1

Laboratory Report and Chain of Custody

DEPARTMENT OF THE ARMY
U.S. ARMY CORPS OF ENGINEERS, NEW YORK DISTRICT
JACOB K. JAVITS FEDERAL BUILDING
26 FEDERAL PLAZA
NEW YORK NEW YORK 10278-0090

OCT 1 5 2019

REGULATORY BRANCH

SUBJECT: Department of the Army Permit Application File Number NAN-2019-00906-EMI by the Town of Babylon for Culvert Replacement and Fish Passage Installation between Southard's Pond and the Carll's River, in the Village of Babylon, Town of Babylon, Suffolk County, New York

1. PERMITTEE:
Town of Babylon
Department of Coastal and Environmental Management
Attn: Richard Groh
281 Phelps Drive, Room 23
North Babylon, New York 111703

2. On July 19, 2019 the New York District of the U.S. Army Corps of Engineers received a request for Department of the Army authorization to replace two (2) existing 3-foot-wide by five-foot-high by 32-foot-long pipe culverts with an approximately 10-foot-wide by 3-foot-high by 32-foot-long box culvert and an approximately two-foot-wide by three-foot-high by 32-foot-long box culvert with an approximately two-foot-wide by three-foot-high sluice gate. Approximately 25-cubic yards of material will be dredged from an area of approximately 74-square feet on the pond side to install a new approximately 115-foot-long naturalized fish passage. Dredged material will be placed in two upland hay-baled locations for storage and dewatering over an area of approximately 550 square feet. Approximately 25-cubic yards of rip-rap will be installed at a depth of 18-inches below the existing plane of Ordinary High Water over an area of approximately 450-square feet. Following installation of the fish-passage, the footprint area will be re-graded and replanted with native wetland plants and approximately 200-square feet of additional wetlands will be established. A temporary cofferdam and turbidity curtain will be utilized during construction and the construction area will be temporarily dewatered. The project is located at the southern end of Southard's Pond in the Village of Babylon, Town of Babylon, Suffolk County, New York.

3. The specific applicant-provided details are as shown on the attached permit drawings titled "Carll's River Watershed Project Draft Progress Plans" dated May 2019, prepared by NV5.

4. This determination covers only the work described in the submitted material. Any major changes in the project may require additional authorizations from the New York District of the U.S. Army Corps of Engineers.

5. Based on the information submitted to this office and accomplishment of any required notification in accordance with the applicable federal requirements, our review of the subject work indicates that an individual Department of the Army permit is not required. It

appears that the activities within the jurisdiction of this office could be accomplished under Department of the Army Nationwide General Permit Number 3 MAINTENANCE, Number 27 AQUATIC HABITAT RESTORATION, ESTABLISHMENT, AND ENHANCEMENT ACTIVITIES, and Number 33 TEMPORARY CONSTRUCTION, ACCESS, AND DEWATERING and in accordance with Section 10 of the Rivers and Harbors Act of 1899 (33 U.S.C. 403) and Section 404 of the Clean Water Act (33 U.S.C. 1344). The nationwide permits are prescribed at Reissuance of Nationwide Permits in the Federal Register dated January 6, 2017 (82 FR 1860). The subject work may be performed without further authorization from this office provided it complies with Sections A through D, Number 3 MAINTENANCE, Number 27 AQUATIC HABITAT RESTORATION, ESTABLISHMENT, AND ENHANCEMENT ACTIVITIES, and Number 33 TEMPORARY CONSTRUCTION, ACCESS, AND DEWATERING; New York District regional conditions; the following work-specific Special Conditions listed below; and any applicable regional conditions added by the State of New York.

6. Other than the work-specific Special Conditions listed below, the 2017 nationwide general permits in the State of New York, including their final regional conditions, water quality certifications, and coastal zone concurrence statements are available at:

https://www.nan.usace.army.mil/Portals/37/docs/regulatory/publicnotices/Regional%20Gen%20Permit/PN-LRB%20NAN%20FinalRegionalConditionsWQC%20CZMforNYdated%2021-MAR-2017.pdf?ver=2017-03-22-111131-070

If you require a specific paper copy, please contact our Regulator-of-the-Day at 917-790-8511 to request one be mailed to you. Please be sure to have the above eighteen-character file number readily available when you call.

7. Work-specific Special Conditions:

A. The permittee understands and agrees that, if future operations by the United States require the removal, relocation, or other alteration, of the structure or work herein authorized, or if, in the opinion of the Secretary of the Army or his authorized representative, said structure or work shall cause unreasonable obstruction to the free navigation of the navigable waters, the permittee will be required, upon due notice from the Corps of Engineers, to remove, relocate, or alter the structural work or obstructions caused thereby, without expense to the United States. No claim shall be made against the United States on account of any such removal or alteration.

B. The permittee shall sign and submit the attached compliance certification form to

this office **within 30 days of COMPLETION** of the regulated activity authorized by this permit and any mitigation work required by Special Condition.

C. The permittee, and their agents, shall take actions to prevent construction materials, including debris, from entering any waterway to become drift or pollution hazards.

D. The permittee, and their agents, shall restore temporarily impacted wetlands or waters of the United States to their pre-construction elevations and re-seed or plant these areas with native vegetation. The permittee shall install appropriate temporary fencing around all on-site wetlands and waters of the United States not authorized herein to be impacted and other sensitive ecological areas during construction periods, to prevent equipment and personnel from entering these areas.

E. The permittee, and their agents, shall avoid in-water work at Elda Lake from March 1 to June 30, of any calendar year to minimize impacts to migrating and spawning anadramous fish. If Elda Lake is done prior to the opening of Southard's Pond to migratory fish passage, the seasonal restriction is not needed for Elda Lake as long as turbidity barriers are utilized.

F. The permittee, and their agents, shall develop and implement a maintenance plan for the proposed new structures and submit to the USACE, New York District, Operations Regulatory Branch, 26 Federal Plaza, Room 16-406, New York, New York 10278 and to National Oceanic and Atmospheric Administration/National Marine Fisheries Service, James J. Howard Marine Sciences Laboratory, Mid-Atlantic Field Offices Supervisor, 74 Magruder Road, Highlands, New Jersey 07732 by the completion of project construction.

8. Please note that this nationwide general permit (NWGP) verification is based on a preliminary jurisdictional determination (JD). A preliminary jurisdictional determination (JD) is not appealable. If you wish, prior to commencement of the authorized work you may request an approved jurisdictional determination (JD), which may be appealed, by contacting the New York District, US Army Corps of Engineers for further instructions. To assist you in this decision and address any questions you may have on the differences between preliminary and approved jurisdictional determinations, please review US Army Corps of Engineers Regulatory Guidance Letter Number 16-01, which can be found at:

https://usace.contentdm.oclc.org/utils/getfile/collection/p16021coll9/id/1256

9. This verification is valid until March 18, 2022, unless the nationwide general permits

are modified, reissued, or revoked before then. This verification will remain valid until March 18, 2022, if the subject work activity complies with the terms of any subsequent modifications of the nationwide general permits. If the nationwide general permits are suspended, revoked, or modified in such a way that the subject activity would no longer comply with the terms and conditions of a nationwide general permit, and the proposed work activity has commenced, or is under contract to commence, the permittee will have twelve (12) months from the date of such permit action to complete the regulated work.

This authorization is conditional on the permittee's receipt of the required water quality certificate or waiver from the New York State Department of Environmental Conservation (NYSDEC). No work may be accomplished until the required approval or waiver from NYSDEC has been obtained.

This authorization is conditional on the permittee's receipt of the required coastal zone management concurrence or waiver from the New York State Department of State (NYSDOS). No work may be accomplished until the required approval or waiver from NYSDOS has been obtained.

10. In order for us to better serve you and others, please complete our Customer Service Survey located at:

http://www.nan.usace.army.mil/Missions/Regulatory/CustomerSurvey.aspx

11. Any inquiries should be directed to our Regulator-of-the-Day at 917-790-8511. Please be sure to have the above eighteen-character file number readily available when you call.

Ronald R. Pinzon
Chief, Eastern Section

Enclosures (2)
1. Dated Permit Drawings
2. Completion Form

Copies Furnished:
Land Use Ecological Services Inc.
Attn: William Bowman
570 Expressway Drive South, Suite 2F
Medford, New York 11763

TOWN OF BABYLON
SUFFOLK COUNTY, NEW YORK

CARLLS RIVER WATERSHED PROJECT
DRAFT PROGRESS PLANS

MAY 2019

LOCATION #3
SOUTHARDS POND

LOCATION MAP
N.T.S.

OCT 1 5 2019

ALL WORK CONTEMPLATED UNDER THIS CONTRACT SHALL BE COVERED BY AND IN CONFORMITY WITH THE CURRENT NYSDOT STANDARD SPECIFICATIONS DATED 09/01/2018 (U.S. CUSTOMARY UNITS), EXCEPT AS MODIFIED ON THIS PLAN AND IN THE ITEMIZED PROPOSAL.

NYS EDUCATION LAW NOTE:

IT IS VIOLATION OF NYS EDUCATION LAW FOR ANY PERSON TO ALTER A DOCUMENT IN ANY WAY, UNLESS ACTING UNDER THE DIRECTION OF A LICENSED PROFESSIONAL ENGINEER. IF A DOCUMENT BEARING THE SEAL OF AN ENGINEER IS ALTERED, THE ALTERING ENGINEER SHALL AFFIX TO THE DOCUMENT THEIR SEAL AND THE NOTATION "ALTERED BY" FOLLOWED BY THEIR SIGNATURE AND THE DATE OF SUCH ALTERATION, AND A SPECIFIC DESCRIPTION OF THE ALTERATION.

PREPARED BY:
NV5
40 MARCUS DRIVE, SUITE 201
MELVILLE, NEW YORK 11747
P: 631.891.3200 WWW.NV5.COM

USACE FILE: NAN-2019-00906-EMI

S:\Project\728518-000340●0-Carlls River Watershed Design Project\Technical\Cadd\Plan Sheets\US Army Corps\06-02-Construction Plans - Location 3.dwg

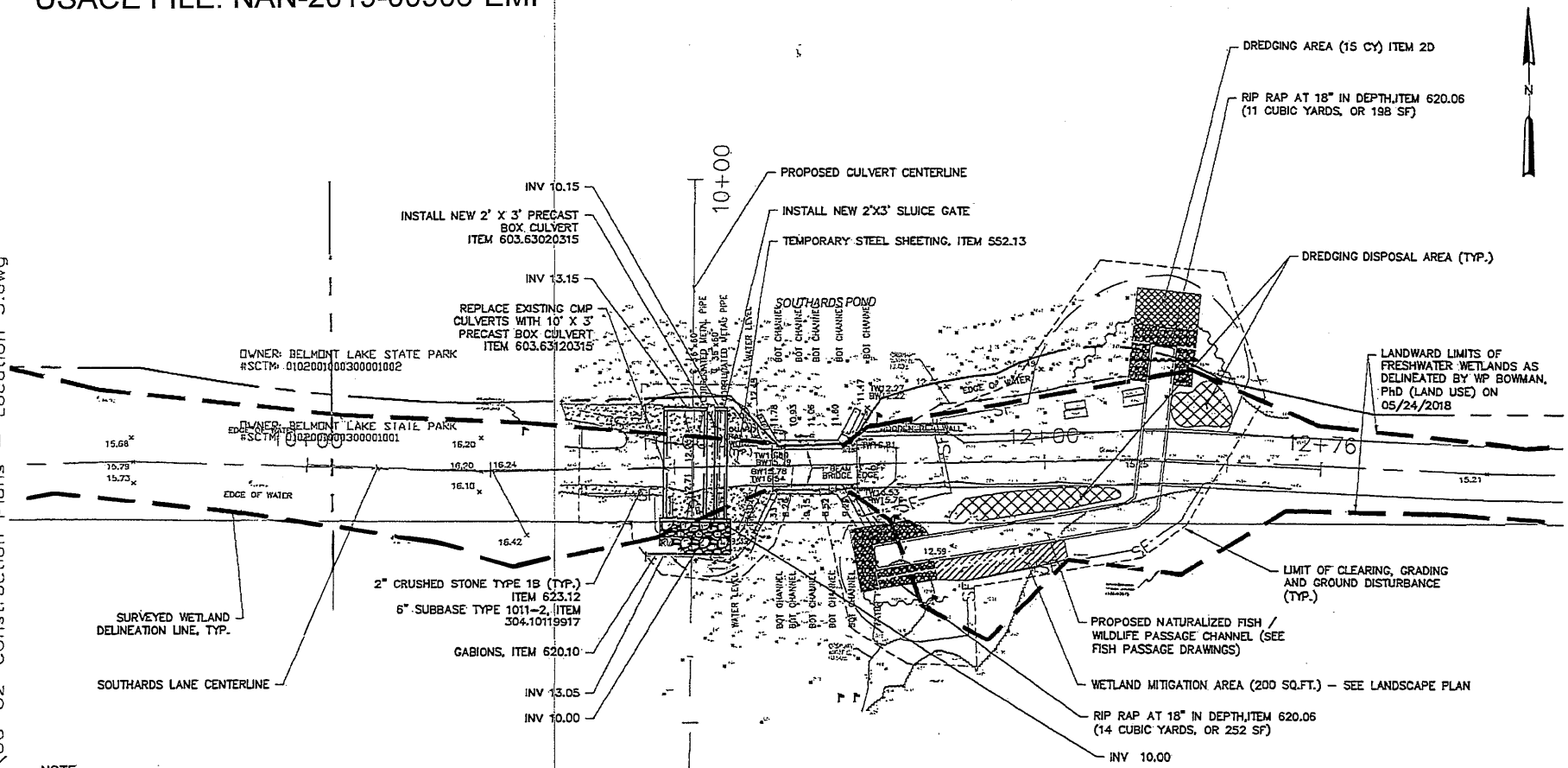

NOTE:
1. EXCAVATION TO BE PAID FOR UNDER ITEMS 203.02, UNCLASSIFIED EXCAVATION AND 206.0201, TRENCH AND CULVERT EXCAVATION.
2. USE COFFERDAM TO KEEP EXCAVATION FREE FROM WATER DURING CULVERT INSTALLATION.ITEM 553.020001
3. IN-STREAM CONSTRUCTION OR ANY ACTIVITY THAT MAY INCREASE TURBIDITY IS PROHIBITED BETWEEN OCTOBER 1ST AND MARCH 31ST.

OCT 15 2019

GRAPHIC SCALE

40 0 20 40

(IN FEET)
1 INCH = 40 FT.

CONSTRUCTION PLAN
LOCATION #3 -
SOUTHARDS POND

CARLLS RIVER WATERSHED PROJECT
DRAFT PROGRESS PLANS
DECEMBER 2018

DESIGNED BY:
CHECKED BY:
DRAWN BY:
COMPARED BY:

NV5
40 MARCUS DRIVE, SUITE 201
MELVILLE, NEW YORK 11747
P: 631.891.3200 WWW.NV5.COM

PROJECT NUMBER: 728518-000340

SCALE	DWG. NO	SHEET NO.
1"=40'-0"	CP3-01	103

SYMBOL	DESCRIPTION	DATE

REVISIONS

USACE FILE: NAN-2019-00906-EMI

S:\Project\728518-0000340.00-Carlls River Watershed Design Project\Technical\Cadd\Plan Sheets\US Army Corps\06-03-Structrual Plans - Location 3.dwg

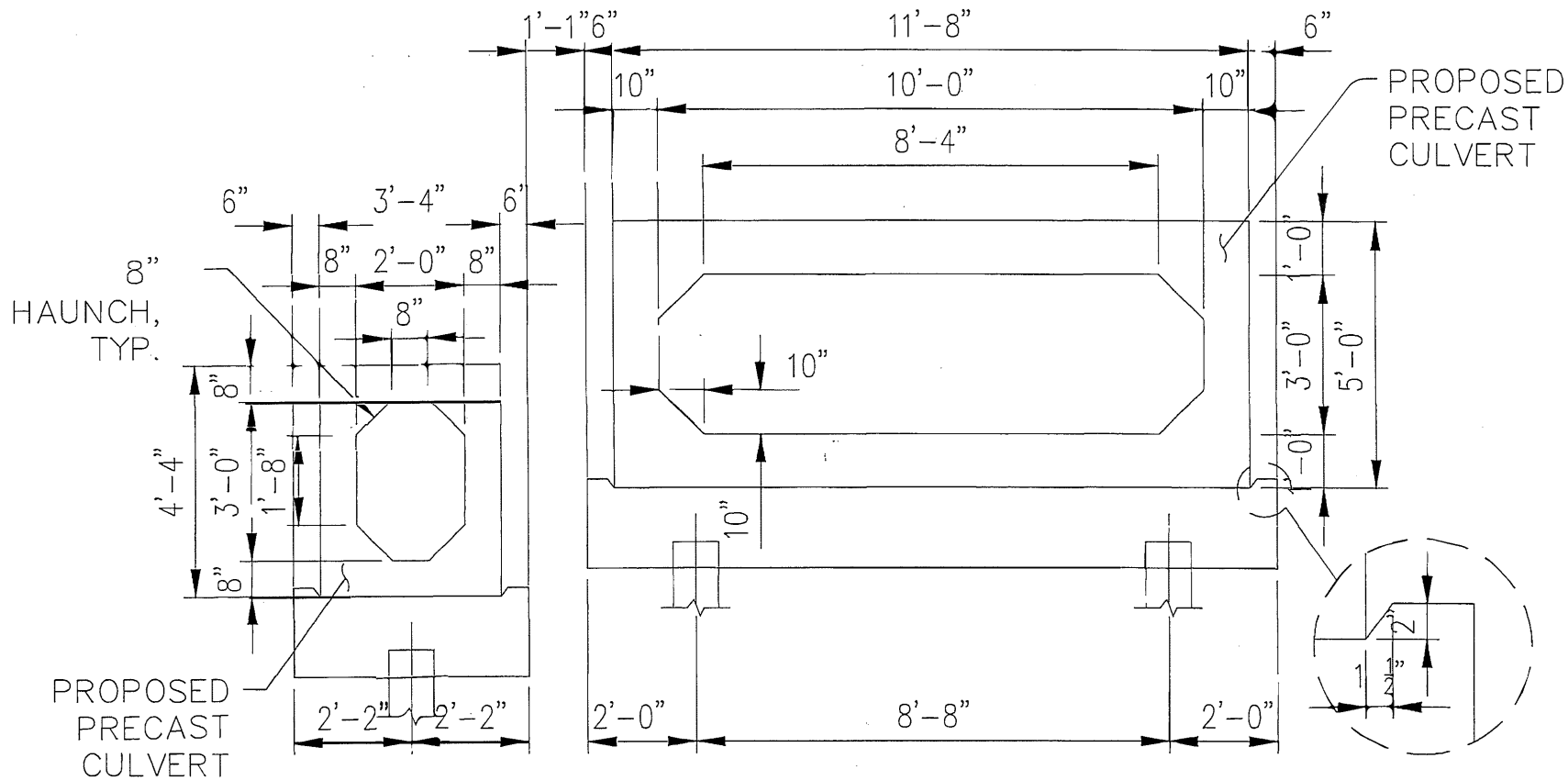

CULVERT SECTION A-A

OCT 15 2019

STRUCTURAL PLAN LOCATION #3 SOUTHARDS POND	CARLLS RIVER WATERSHED PROJECT DRAFT PROGRESS PLANS DECEMBER 2018	
DESIGNED BY: CHECKED BY: DRAWN BY: COMPARED BY:	NV5 40 MARCUS DRIVE, SUITE 201 MELVILLE, NEW YORK 11747 P: 631.891.3200 WWW.NV5.COM	PROJECT NUMBER: 728518-000340 SCALE N.T.S. / DWG. NO SP3-03 / SHEET NO. 107

SYMBOL	DESCRIPTION	DATE

REVISIONS

USACE FILE: NAN-2019-00906-EMI

S:\Project\728518-0000340.00-Carlls River Watershed Design Project\Technical\Cadd\Plan Sheets\US Army Corps\06-03-Structrual Plans - Location 3.dwg

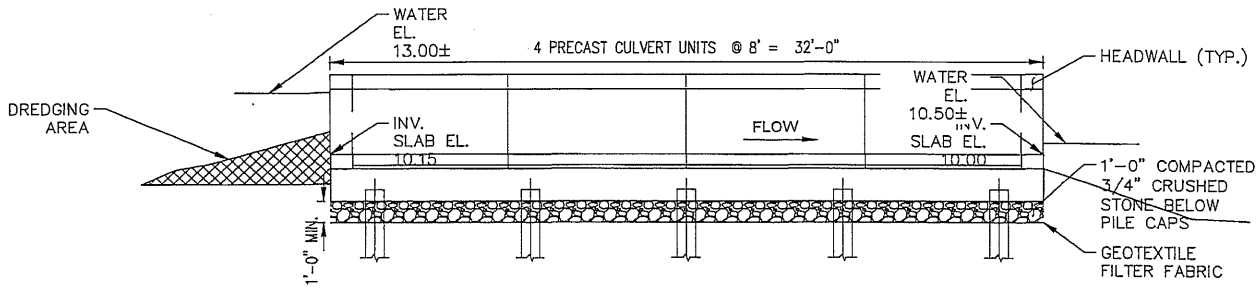

SECTION C-C

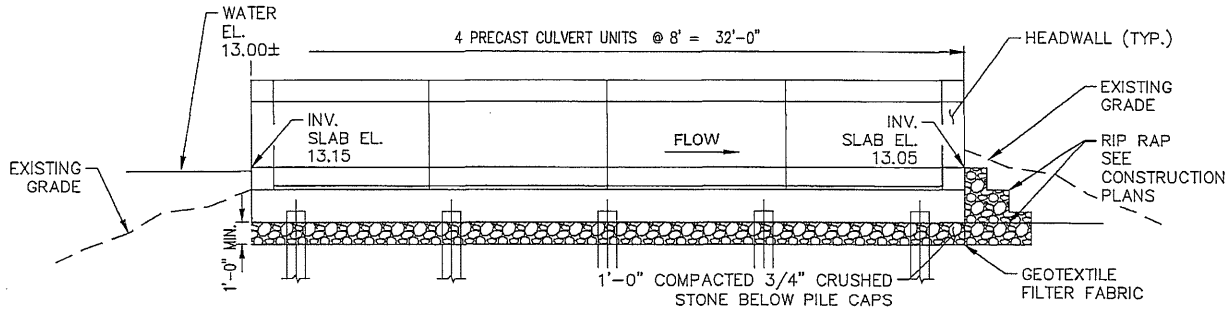

ELEVATION D-D

OCT 1 5 2019

STRUCTURAL PLAN LOCATION #3 SOUTHARDS POND	CARLLS RIVER WATERSHED PROJECT DRAFT PROGRESS PLANS DECEMBER 2018					
DESIGNED BY: CHECKED BY: DRAWN BY: COMPARED BY:	NV5 40 MARCUS DRIVE, SUITE 201 MELVILLE, NEW YORK 11747 P: 631.891.3200 WWW.NV5.COM	PROJECT NUMBER: 728518-000340			SYMBOL	DESCRIPTION	DATE
		SCALE N.T.S.	DWG. NO SP3-02	SHEET NO. 106	R E V I S I O N S		

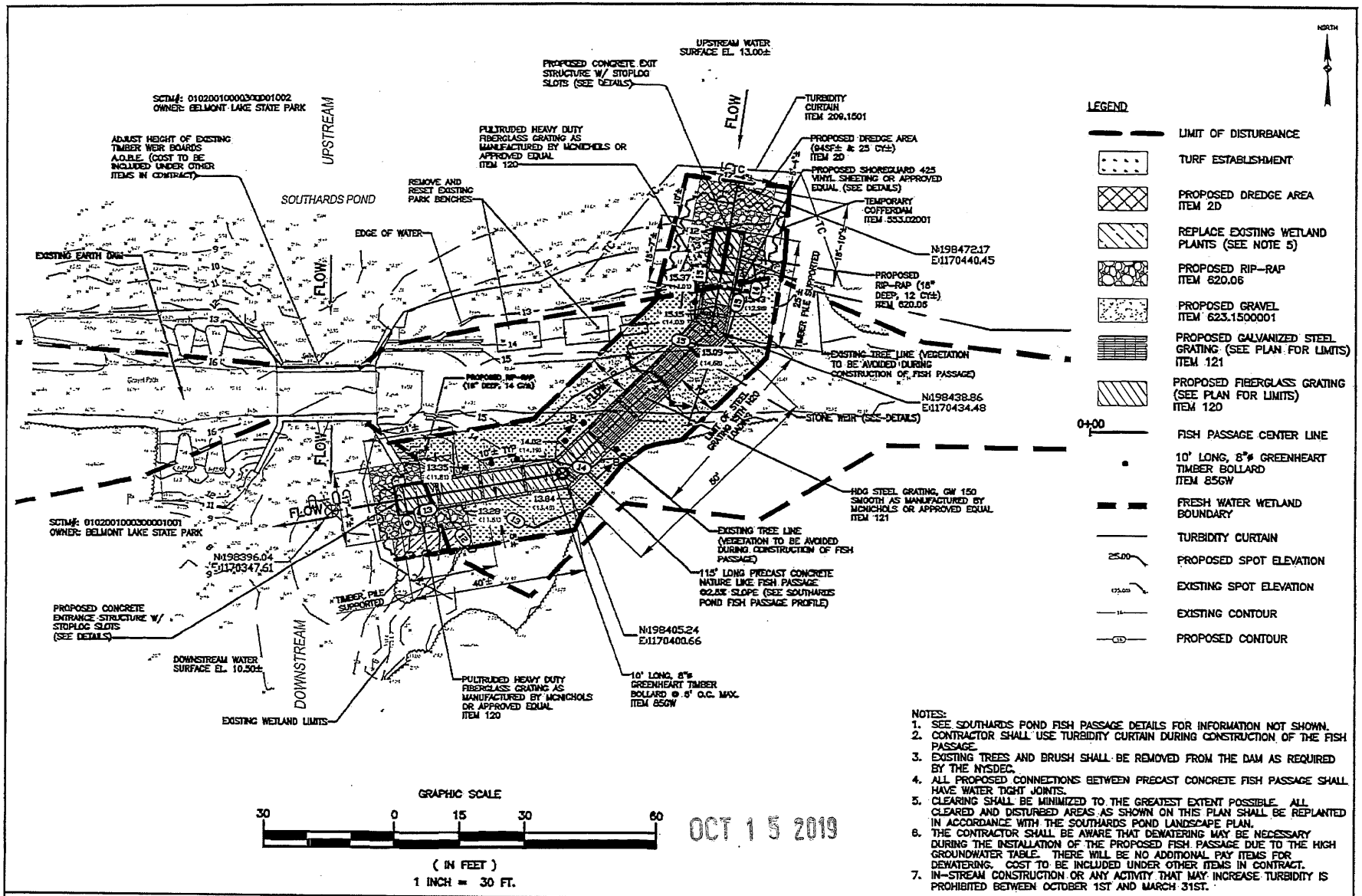

OCT 15 2019

NOTES:
1. SEE SOUTHARDS POND FISH PASSAGE DETAILS FOR INFORMATION NOT SHOWN.
2. CONTRACTOR SHALL USE TURBIDITY CURTAIN DURING CONSTRUCTION OF THE FISH PASSAGE.
3. EXISTING TREES AND BRUSH SHALL BE REMOVED FROM THE DAM AS REQUIRED BY THE NYSDEC.
4. ALL PROPOSED CONNECTIONS BETWEEN PRECAST CONCRETE FISH PASSAGE SHALL HAVE WATER TIGHT JOINTS.
5. CLEARING SHALL BE MINIMIZED TO THE GREATEST EXTENT POSSIBLE. ALL CLEARED AND DISTURBED AREAS AS SHOWN ON THIS PLAN SHALL BE REPLANTED IN ACCORDANCE WITH THE SOUTHARDS POND LANDSCAPE PLAN.
6. THE CONTRACTOR SHALL BE AWARE THAT DEWATERING MAY BE NECESSARY DURING THE INSTALLATION OF THE PROPOSED FISH PASSAGE DUE TO THE HIGH GROUNDWATER TABLE. THERE WILL BE NO ADDITIONAL PAY ITEMS FOR DEWATERING. COST TO BE INCLUDED UNDER OTHER ITEMS IN CONTRACT.
7. IN-STREAM CONSTRUCTION OR ANY ACTIVITY THAT MAY INCREASE TURBIDITY IS PROHIBITED BETWEEN OCTOBER 1ST AND MARCH 31ST.

SOUTHARDS POND FISH PASSAGE GENERAL PLAN

DESIGNED BY:
CHECKED BY:
DRAWN BY:
COMPARED BY:

L. K. McLEAN ASSOCIATES, P.C.
CONSULTING ENGINEERS
49 SOUTH COURT RD., BROOKLYN, NEW YORK 11711

NV5
40 MARCUS DRIVE, SUITE 201
MELVILLE, NEW YORK 11747
P: 631.891.3200 WWW.NV5.COM

CARLLS RIVER WATERSHED PROJECT
DRAFT PROGRESS PLANS
DECEMBER 2018

PROJECT NUMBER: 728518-000340

SCALE	DWG. NO	SHEET NO.

SYMBOL	DESCRIPTION	DATE
REVISIONS		

Aug 13, 2019 - 11:52am
C:\Users\cyuen\appdata\local\temp\AcPublish_5920\8.5x11 Southards Pond General Plan.dwg

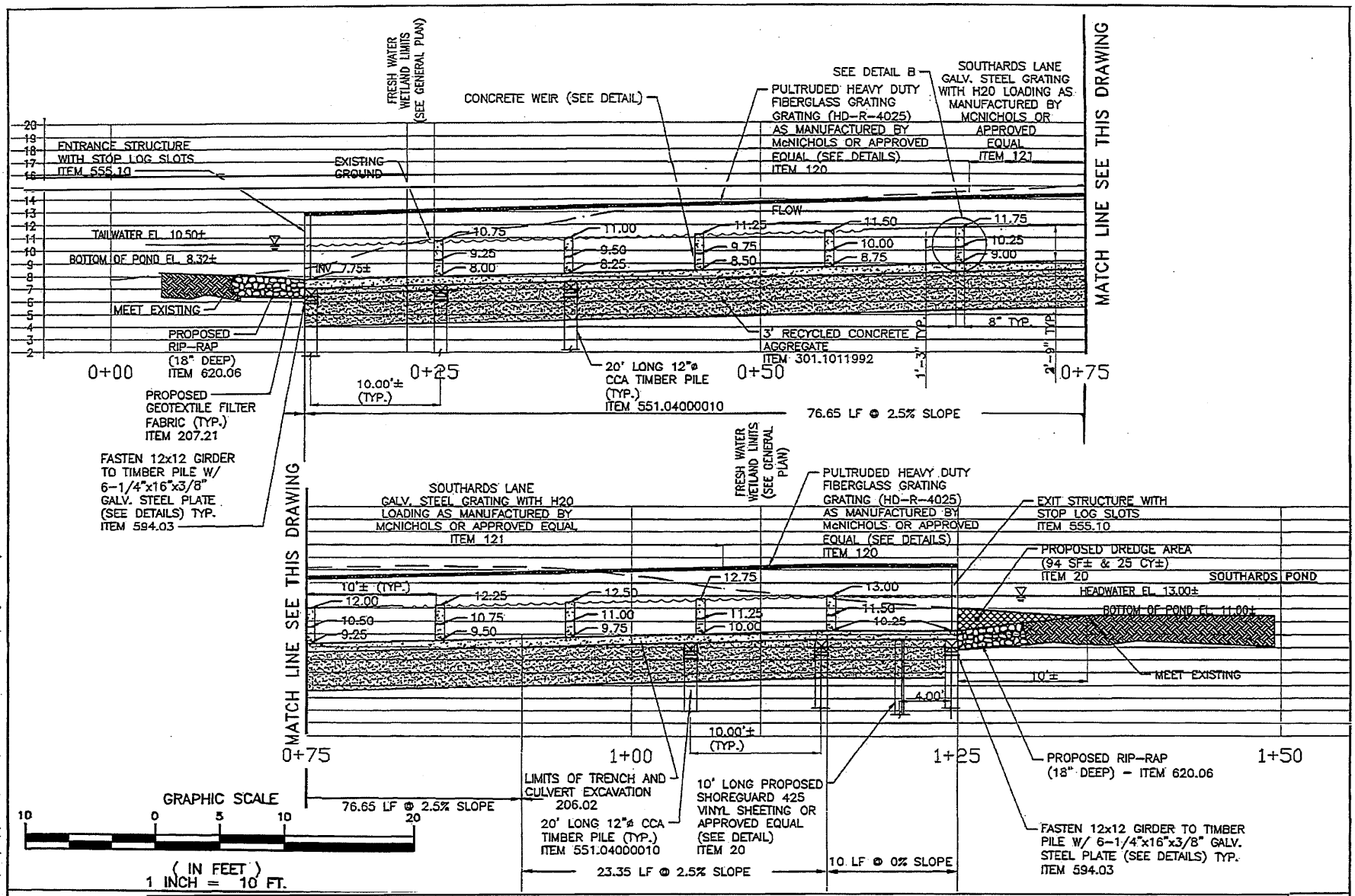

SOUTHARDS POND
FISH PASSAGE DETAILS - 1

DESIGNED BY:
CHECKED BY:
DRAWN BY:
COMPARED BY:

L. K. McLEAN ASSOCIATES, P.C.

NV5
40 MARCUS DRIVE, SUITE 201
MELVILLE, NEW YORK 11747
P: 631.891.3200 WWW.NV5.COM

CARLLS RIVER WATERSHED PROJECT
DRAFT PROGRESS PLANS
DECEMBER 2018

PROJECT NUMBER: 728518-000340

SCALE	DWG. NO	SHEET NO.

SYMBOL	DESCRIPTION	DATE
REVISIONS		

Aug 13, 2019 - 02:03pm
C:\Users\Cyuan\appdata\local\temp\AcPublish_15292\8.5x11 Southards Pond fish passage details.dwg

OCT 15 2019

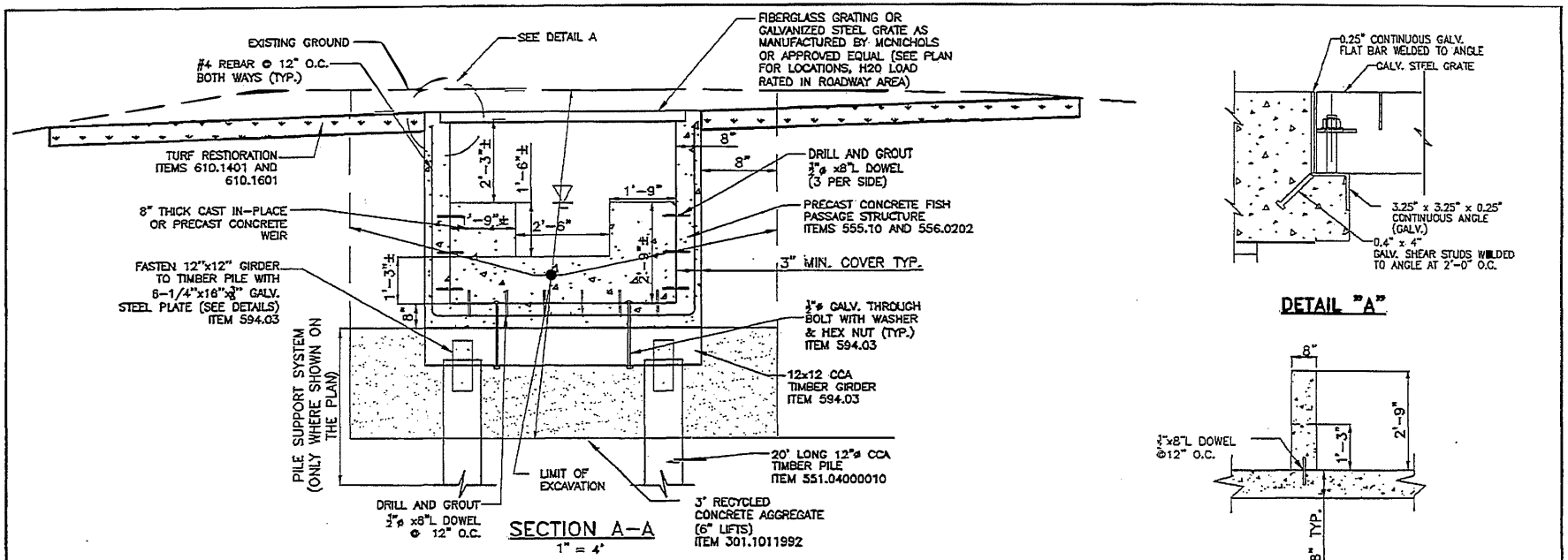

SECTION A-A
1" = 4'

DETAIL "A"

DETAIL "B"
N.T.S.

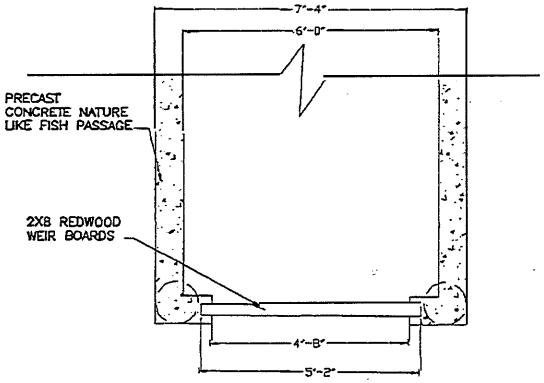

ENTRANCE/EXIT STOP LOG DETAIL
1" = 3'

OCT 1 5 2019

NOTES:
1. IN-STREAM CONSTRUCTION OR ANY ACTIVITY THAT MAY INCREASE TURBIDITY IS PROHIBITED BETWEEN OCTOBER 1ST AND MARCH 31ST.

SOUTHARDS POND
FISH PASSAGE DETAILS – 2

DESIGNED BY:
CHECKED BY:
DRAWN BY:
COMPARED BY:

L. K. McLEAN ASSOCIATES, P.C.

NV5
40 MARCUS DRIVE, SUITE 201
MELVILLE, NEW YORK 11747
P: 631.891.3200 WWW.NV5.COM

CARLLS RIVER WATERSHED PROJECT
DRAFT PROGRESS PLANS
DECEMBER 2018

PROJECT NUMBER: 728518-000340

SCALE	DWG. NO	SHEET NO.

SYMBOL	DESCRIPTION	DATE

REVISIONS

Aug 13, 2019 - 02:03pm
C:\Users\cyuen\appdata\local\temp\AcPublish_15292\85x11 Southards Pond fish passage details.dwg

NOTES:
1. IN-STREAM CONSTRUCTION OR ANY ACTIVITY THAT MAY INCREASE TURBIDITY IS PROHIBITED BETWEEN OCTOBER 1ST AND MARCH 31ST.

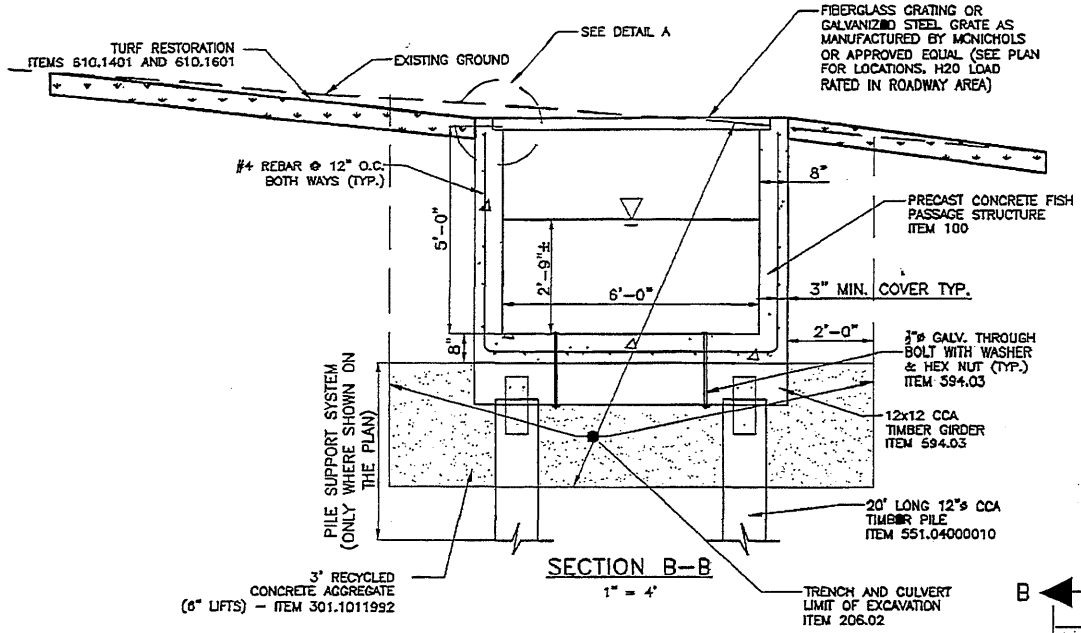

SECTION B–B
1" = 4'

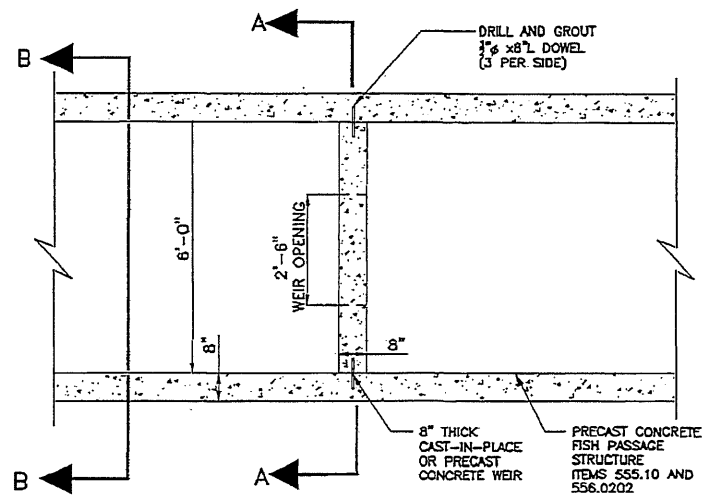

PARTIAL PLAN VIEW
1" = 4'

OCT 15 2019

SOUTHARDS POND FISH PASSAGE DETAILS – 3	L. K. McLEAN ASSOCIATES, P.C. CONSULTING ENGINEERS 127 20TH COURT NO. BROOKLYN, NEW YORK 11215	CARLLS RIVER WATERSHED PROJECT DRAFT PROGRESS PLANS DECEMBER 2018	
DESIGNED BY:	NV5 40 MARCUS DRIVE, SUITE 201 MELVILLE, NEW YORK 11747 P: 631.891.3200 WWW.NV5.COM	PROJECT NUMBER: 728518-000340	
CHECKED BY:			
DRAWN BY:		SCALE / DWG. NO / SHEET NO.	SYMBOL / DESCRIPTION / DATE
COMPARED BY:			REVISIONS

Aug 13, 2019 – 02:03pm
C:\Users\Cyuen\appdata\local\temp\AcPublish_15292\8.5x11 Southards Pond fish passage details.dwg

USACE FILE: NAN-2019-00906-EMI

S:\Project\728518-0000340.00-Carlls River Watershed Design Project\Technical\Cadd\Plan Sheets\US Army Corps\06-03-Landscape Plans - Location 3.dwg

LEGEND:

Symbol	Description
(dotted)	TURF ESTABLISHMENT – LAWNS, ITEM 610.1602 TOPSOIL – ROADSIDE – ITEM 610.1402
(cross-hatched)	HERBACEOUS PLANTS – ITEM 611.0711 TOPSOIL – WETLAND MATERIALS – ITEM 610.1407
(hatched)	DECIDUOUS SHRUBS – 611.0411 TOPSOIL – WETLAND MATERIALS – ITEM 610.1407

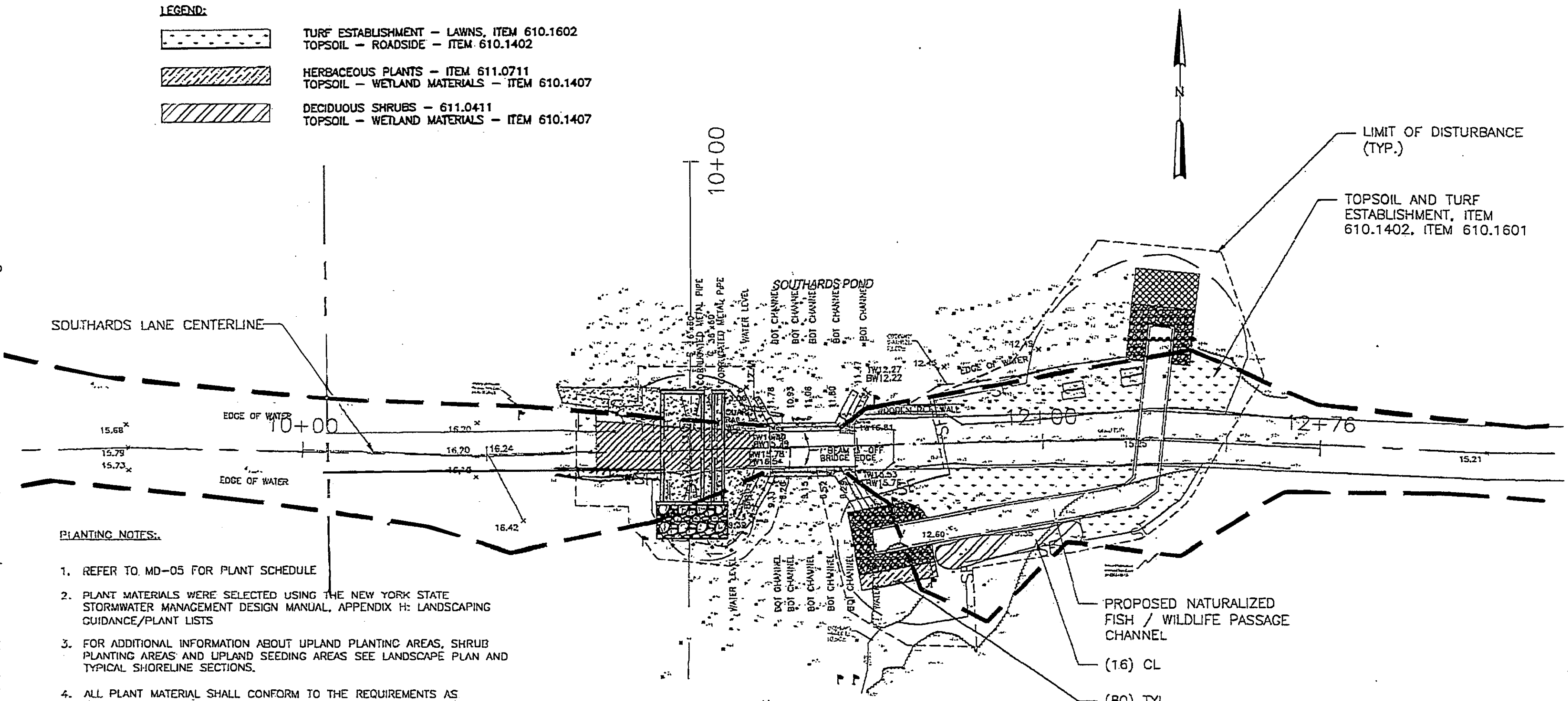

PLANTING NOTES:

1. REFER TO MD-05 FOR PLANT SCHEDULE
2. PLANT MATERIALS WERE SELECTED USING THE NEW YORK STATE STORMWATER MANAGEMENT DESIGN MANUAL, APPENDIX H: LANDSCAPING GUIDANCE/PLANT LISTS
3. FOR ADDITIONAL INFORMATION ABOUT UPLAND PLANTING AREAS, SHRUB PLANTING AREAS AND UPLAND SEEDING AREAS SEE LANDSCAPE PLAN AND TYPICAL SHORELINE SECTIONS.
4. ALL PLANT MATERIAL SHALL CONFORM TO THE REQUIREMENTS AS ESTABLISHED BY THE AMERICAN ASSOCIATION OF NURSERYMAN, LATEST EDITION.
5. SEE SPECIFICATIONS FOR ITEMS NOT COVERED ON THE PLANS AND DETAILS.
6. THE SITE SHALL BE KEPT NEAT AT ALL TIMES AND SHALL BE KEPT FREE OF DEBRIS LEFT FROM THE PLANTING OPERATION. THE CONTRACTOR IS TO USE CARE DURING EXCAVATION AND PLANTING TO AVOID DISTURBING OR DAMAGING ANY ADJACENT CONSTRUCTION SUBSURFACE DRAINAGE OR UTILITIES. ANY DAMAGE RESULTING FROM THIS CONSTRUCTION WILL BE THE CONTRACTOR'S RESPONSIBILITY AND SHALL BE RESTORED AT HIS EXPENSE TO THE SATISFACTION OF THE OWNER.
7. CONTRACTOR SHALL SUPPLY PLANT MATERIAL IN THE QUANTITIES INDICATED IN THE INDIVIDUAL CALL-OUTS ON THE PLANTING PLANS. SHOULD THERE BE DISCREPANCIES BETWEEN THE PLAN CALL-OUTS AND THE PLANT SCHEDULE, THE PLAN CALL-OUT SHALL DETERMINE FINAL QUANTITIES.
8. PLANT MATERIAL LOCATIONS ON THE PLANTING PLANS ARE APPROXIMATE AND SHALL BE ADJUSTED AS DIRECTED BY THE LANDSCAPE ARCHITECT IN THE FIELD. SHOULD PLANTS BE INSTALLED PRIOR TO LANDSCAPE ARCHITECT'S FIELD STAKING AND/OR PLACEMENT DIRECTION, CONTRACTOR SHALL PLANT AT THEIR OWN RISK.

OCT 15 2019

GRAPHIC SCALE

40 0 20 40

(IN FEET)
1 INCH = 40 FT.

LANDSCAPE PLAN
LOCATION #3 –
SOUTHARDS POND

CARLLS RIVER WATERSHED PROJECT
DRAFT PROGRESS PLANS
DECEMBER 2018

DESIGNED BY: ______
CHECKED BY: ______
DRAWN BY: ______
COMPARED BY: ______

NV5
40 MARCUS DRIVE, SUITE 201
MELVILLE, NEW YORK 11747
P: 631.891.3200 WWW.NV5.COM

PROJECT NUMBER: 728518-000340

SCALE	DWG. NO	SHEET NO.
1"=40'-0"	LP3-01	104

SYMBOL	DESCRIPTION	DATE

R E V I S I O N S

NATIONWIDE GENERAL PERMIT COMPLIANCE CERTIFICATION AND REPORT FORM

Permit File Number: NAN-2019-00906-EMI
Permittee: Town of Babylon
Location: Southern End of Southard's Pond, Village of Babylon, Town of Babylon, Suffolk County, New York

Date Permit Letter Issued: OCT 15 2019

Within 30 days of the completion of the activity authorized by this nationwide general permit and any mitigation required in the verification letter, please sign this certification and return it to the address at the bottom of this form.

Please note that your permitted activity is subject to a compliance inspection by a U.S. Army Corps of Engineers representative. If you fail to comply with the permit's terms and conditions you are subject to permit suspension, modification or revocation.

I hereby certify that the work authorized by the above referenced nationwide general permit has been completed in accordance with the terms and conditions of said permit, and required mitigation was completed in accordance with the permit conditions.

_____ _____
Signature of Permittee **Date**

FOLD THIS FORM INTO THIRDS, WITH THE BOTTOM THIRD FACING OUTWARD. TAPE IT TOGETHER AND MAIL TO THE ADDRESS BELOW OR FAX (212) 264-4260.

PLACE STAMP HERE

DEPARTMENT OF THE ARMY
NEW YORK DISTRICT CORPS OF ENGINEERS
JACOB K. JAVITS FEDERAL BUILDING
ATTN: CENAN-OP-RE
NEW YORK, NEW YORK 10278-0090

DEPARTMENT OF THE ARMY
U.S. ARMY CORPS OF ENGINEERS, NEW YORK DISTRICT
JACOB K. JAVITS FEDERAL BUILDING
26 FEDERAL PLAZA
NEW YORK NEW YORK 10278-0090

OCT 1 5 2019

REGULATORY BRANCH

SUBJECT: Department of the Army Permit Application File Number NAN-2019-00907-EMI by the Town of Babylon for Culvert Replacement and Fish Passage Installation between Elda Lake and the Carll's River, in North Babylon, Town of Babylon, Suffolk County, New York

1. PERMITTEE:
Town of Babylon
Department of Coastal and Environmental Management
Attn: Richard Groh
281 Phelps Drive, Room 23
North Babylon, New York 111703

2. On July 19, 2019 the New York District of the U.S. Army Corps of Engineers received a request for Department of the Army authorization to replace three (3) existing 64-inch-wide by 43-inch-high by 64-foot-long culvert pipes with two (2) approximately 10-foot-wide by five-foot-high by 64-foot-long box culverts with approximately 10.5-cubic yards of riprap placed on the downstream end over an area of approximately 185 square feet. Additionally, replace an existing two-foot-wide by three-foot-long sluice gate with an approximately three-foot-wide by four-foot-long sluice gate and spillway. Approximately 10-cubic yards of material will be dredged from an area of approximately 160-square foot area on the Elda Lake side and replaced with approximately 10-cubic yards of riprap at a depth of 18-inches below the plane of Ordinary High Water. Additionally, approximately 22-cubic yards of material will be dredged from an area of approximately 400-square feet on the Carll's River side and replaced with approximately 22-cubic yards of riprap at a depth of 18-inches below the plane of Ordinary High Water for the replacement of an overflow weir with a 40-foot-long fish passage. All dredged material will be placed in an upland haybaled location for storage and dewatering over an area of approximately 70-square feet. Following installation of the fish-passage, the footprint area will be regraded and replanted with native wetland plants and an approximately 650-square feet of additional wetlands will be established. A temporary cofferdam and turbidity curtain will be utilized during construction and the construction area will be temporarily dewatered. The project is located at the southern end of Elda Lake in North Babylon, Town of Babylon, Suffolk County, New York.

3. The specific applicant-provided details are as shown on the attached permit drawings titled "Carll's River Watershed Project Draft Progress Plans" dated May 2019, prepared by NV5.

4. This determination covers only the work described in the submitted material. Any major changes in the project may require additional authorizations from the New York District of the U.S. Army Corps of Engineers.

5. Based on the information submitted to this office and accomplishment of any required notification in accordance with the applicable federal requirements, our review of the subject work indicates that an individual Department of the Army permit is not required. It appears that the activities within the jurisdiction of this office could be accomplished under Department of the Army Nationwide General Permit Number 3 MAINTENANCE, Number 27 AQUATIC HABITAT RESTORATION, ESTABLISHMENT, AND ENHANCEMENT ACTIVITIES, and Number 33 TEMPORARY CONSTRUCTION, ACCESS, AND DEWATERING, and in accordance with Section 10 of the Rivers and Harbors Act of 1899 (33 U.S.C. 403) and Section 404 of the Clean Water Act (33 U.S.C. 1344). The nationwide permits are prescribed at Reissuance of Nationwide Permits in the Federal Register dated January 6, 2017 (82 FR 1860). The subject work may be performed without further authorization from this office provided it complies with Sections A through D, Number 3 MAINTENANCE, Number 27 AQUATIC HABITAT RESTORATION, ESTABLISHMENT, AND ENHANCEMENT ACTIVITIES, and Number 33 TEMPORARY CONSTRUCTION, ACCESS, AND DEWATERING; New York District regional conditions; the following work-specific Special Conditions listed below; and any applicable regional conditions added by the State of New York.

6. Other than the work-specific Special Conditions listed below, the 2017 nationwide general permits in the State of New York, including their final regional conditions, water quality certifications, and coastal zone concurrence statements are available at:

https://www.nan.usace.army.mil/Portals/37/docs/regulatory/publicnotices/Regional%20Gen%20Permit/PN-LRB%20NAN%20FinalRegionalConditionsWQC%20CZMforNYdated%2021-MAR-2017.pdf?ver=2017-03-22-111131-070

If you require a specific paper copy, please contact our Regulator-of-the-Day at 917-790-8511 to request one be mailed to you. Please be sure to have the above eighteen-character file number readily available when you call.

7. Work-specific Special Conditions:

A. The permittee understands and agrees that, if future operations by the United States require the removal, relocation, or other alteration, of the structure or work herein authorized, or if, in the opinion of the Secretary of the Army or his authorized representative, said structure or work shall cause unreasonable obstruction to the free navigation of the navigable waters, the permittee will be required, upon due notice from the Corps of Engineers, to remove, relocate, or alter the structural work or obstructions caused thereby, without expense to the United States. No claim shall be

made against the United States on account of any such removal or alteration.

B. The permittee shall sign and submit the attached compliance certification form to this office **within 30 days of COMPLETION** of the regulated activity authorized by this permit and any mitigation work required by Special Condition.

C. The permittee, and their agents, shall take actions to prevent construction materials, including debris, from entering any waterway to become drift or pollution hazards.

D. The permittee, and their agents, shall restore temporarily impacted wetlands or waters of the United States to their pre-construction elevations and re-seed or plant these areas with native vegetation. The permittee shall install appropriate temporary fencing around all on-site wetlands and waters of the United States not authorized herein to be impacted and other sensitive ecological areas during construction periods, to prevent equipment and personnel from entering these areas.

E. The permittee, and their agents, shall avoid in-water work at Elda Lake from March 1 to June 30, of any calendar year to minimize impacts to migrating and spawning anadramous fish. If Elda Lake is done prior to the opening of Southard's Pond to migratory fish passage, the seasonal restriction is not needed for Elda Lake as long as turbidity barriers are utilized.

F. The permittee, and their agents, shall develop and implement a maintenance plan for the proposed new structures and submit to the USACE, New York District, Operations Regulatory Branch, 26 Federal Plaza, Room 16-406, New York, New York 10278 and to National Oceanic and Atmospheric Administration/National Marine Fisheries Service, James J. Howard Marine Sciences Laboratory, Mid-Atlantic Field Offices Supervisor, 74 Magruder Road, Highlands, New Jersey 07732 by the completion of project construction.

8. Please note that this nationwide general permit (NWGP) verification is based on a preliminary jurisdictional determination (JD). A preliminary jurisdictional determination (JD) is not appealable. If you wish, prior to commencement of the authorized work you may request an approved jurisdictional determination (JD), which may be appealed, by contacting the New York District, US Army Corps of Engineers for further instructions. To assist you in this decision and address any questions you may have on the differences between preliminary and approved jurisdictional determinations, please review US Army Corps of Engineers Regulatory Guidance Letter Number 16-01, which can be found at:

https://usace.contentdm.oclc.org/utils/getfile/collection/p16021coll9/id/1256

9. This verification is valid until March 18, 2022, unless the nationwide general permits are modified, reissued, or revoked before then. This verification will remain valid until March 18, 2022, if the subject work activity complies with the terms of any subsequent modifications of the nationwide general permits. If the nationwide general permits are suspended, revoked, or modified in such a way that the subject activity would no longer comply with the terms and conditions of a nationwide general permit, and the proposed work activity has commenced, or is under contract to commence, the permittee will have twelve (12) months from the date of such permit action to complete the regulated work.

This authorization is conditional on the permittee's receipt of the required water quality certificate or waiver from the New York State Department of Environmental Conservation (NYSDEC). No work may be accomplished until the required approval or waiver from NYSDEC has been obtained.

This authorization is conditional on the permittee's receipt of the required coastal zone management concurrence or waiver from the New York State Department of State (NYSDOS). No work may be accomplished until the required approval or waiver from NYSDOS has been obtained.

10. In order for us to better serve you and others, please complete our Customer Service Survey located at:

http://www.nan.usace.army.mil/Missions/Regulatory/CustomerSurvey.aspx

11. Any inquiries should be directed to our Regulator-of-the-Day at 917-790-8511. Please be sure to have the above eighteen-character file number readily available when you call.

Ronald R. Pinzon
Chief, Eastern Section

Enclosures (2)
1. Dated Permit Drawings
2. Completion Form

Copies Furnished:
Land Use Ecological Services Inc.
Attn: William Bowman
570 Expressway Drive South, Suite 2F
Medford, New York 11763

TOWN OF BABYLON
SUFFOLK COUNTY, NEW YORK

CARLLS RIVER WATERSHED PROJECT
DRAFT PROGRESS PLANS

MAY 2019

LOCATION #2
ELDA LAKE

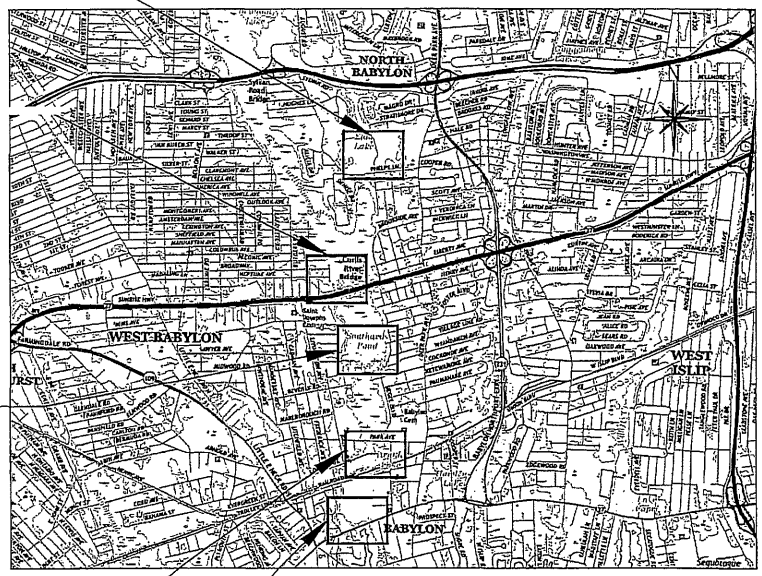

LOCATION MAP
N.T.S.

OCT 15 2019

ALL WORK CONTEMPLATED UNDER THIS CONTRACT SHALL BE COVERED BY AND IN CONFORMITY WITH THE CURRENT NYSDOT STANDARD SPECIFICATIONS DATED 09/01/2018 (U.S. CUSTOMARY UNITS), EXCEPT AS MODIFIED ON THIS PLAN AND IN THE ITEMIZED PROPOSAL.

NYS EDUCATION LAW NOTE:

IT IS VIOLATION OF NYS EDUCATION LAW FOR ANY PERSON TO ALTER A DOCUMENT IN ANY WAY, UNLESS ACTING UNDER THE DIRECTION OF A LICENSED PROFESSIONAL ENGINEER. IF A DOCUMENT BEARING THE SEAL OF AN ENGINEER IS ALTERED, THE ALTERING ENGINEER SHALL AFFIX TO THE DOCUMENT THEIR SEAL AND THE NOTATION "ALTERED BY" FOLLOWED BY THEIR SIGNATURE AND THE DATE OF SUCH ALTERATION, AND A SPECIFIC DESCRIPTION OF THE ALTERATION.

PREPARED BY:
NV5
40 MARCUS DRIVE, SUITE 201
MELVILLE, NEW YORK 11747
P: 631.891.3200 WWW.NV5.COM

USACE FILE: NAN-2019-00907-EMI

NOTE:
1. EXCAVATION TO BE PAID FOR UNDER ITEMS 203.02, UNCLASSIFIED EXCAVATION AND 206.0201, TRENCH AND CULVERT EXCAVATION.
2. USE COFFERDAM TO KEEP EXCAVATION FREE FROM WATER DURING CULVERT INSTALLATION, ITEM 553.020001
3. INSTALL TEMPORARY WATERWAY DIVERSION STRUCTURE, ITEM 553.030001, ON WEST SIDE OF PROPOSED CULVERT.
4. IN-STREAM CONSTRUCTION OR ANY ACTIVITY THAT MAY INCREASE TURBIDITY IS PROHIBITED BETWEEN OCTOBER 1ST AND MARCH 31ST.

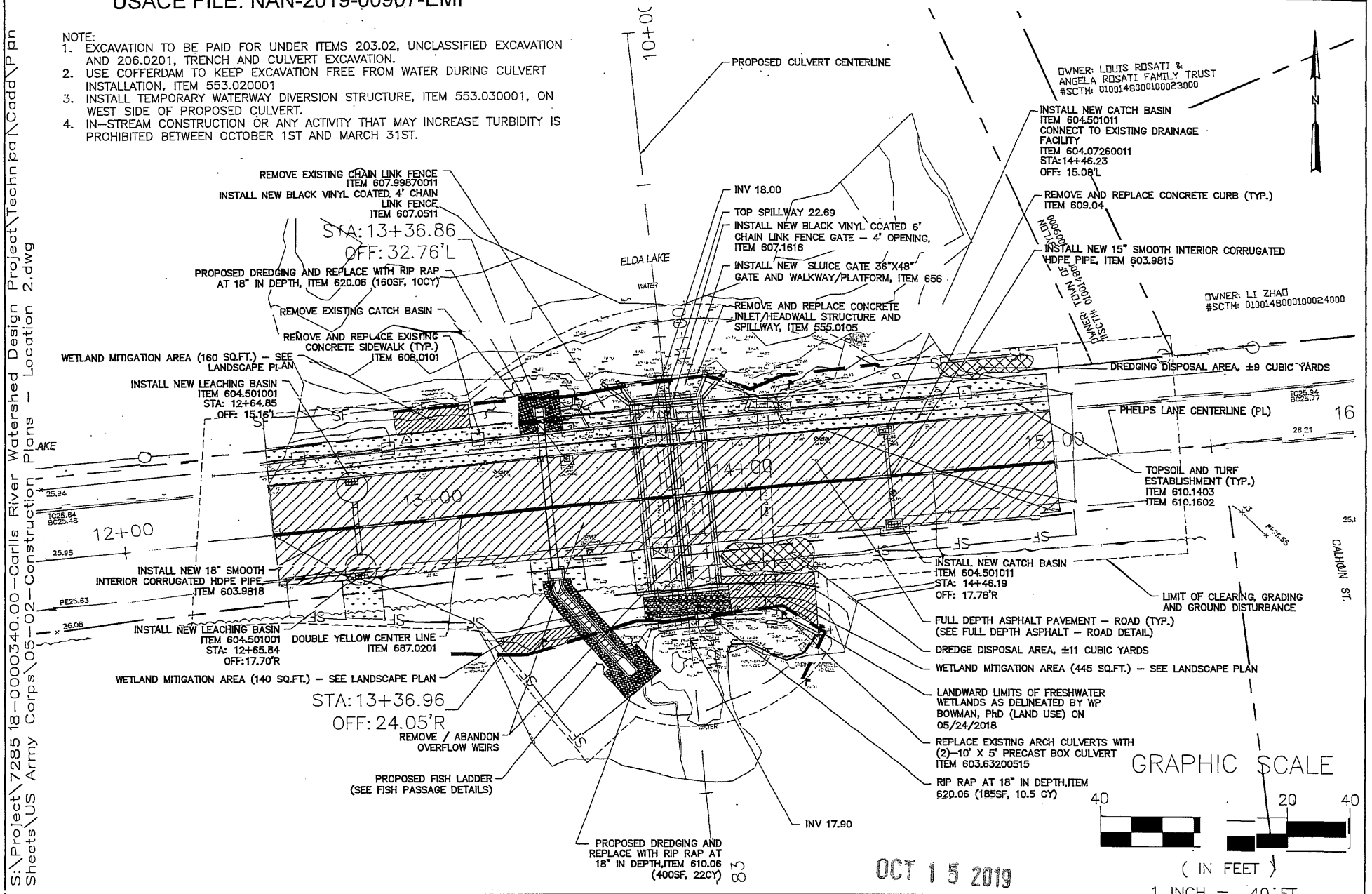

OCT 15 2019

S:\Project\728518-0000340.00-Carlls River Watershed Design Project\Technical\Cadd\Plan Sheets\US Army Corps\05-02-Construction Plans - Location 2.dwg

CONSTRUCTION PLAN LOCATION #2 – ELDA LAKE	CARLLS RIVER WATERSHED PROJECT DRAFT PROGRESS PLANS DECEMBER 2018			
DESIGNED BY:	NV5 40 MARCUS DRIVE, SUITE 201 MELVILLE, NEW YORK 11747 P: 631.891.3200 WWW.NV5.COM	PROJECT NUMBER: 728518-000340		
CHECKED BY:		SCALE 1"=40'-0"	DWG. NO CP2-01	SHEET NO. 74
DRAWN BY:				
COMPARED BY:				

SYMBOL	DESCRIPTION	DATE
REVISIONS		

USACE FILE: NAN-2019-00907-EMI

S:\Project\728518-0000340.00-Carlls River Watershed Design Project\Technical\Cadd\Plan Sheets\US Army Corps\05-04-Structural Plans - Location 2.dwg

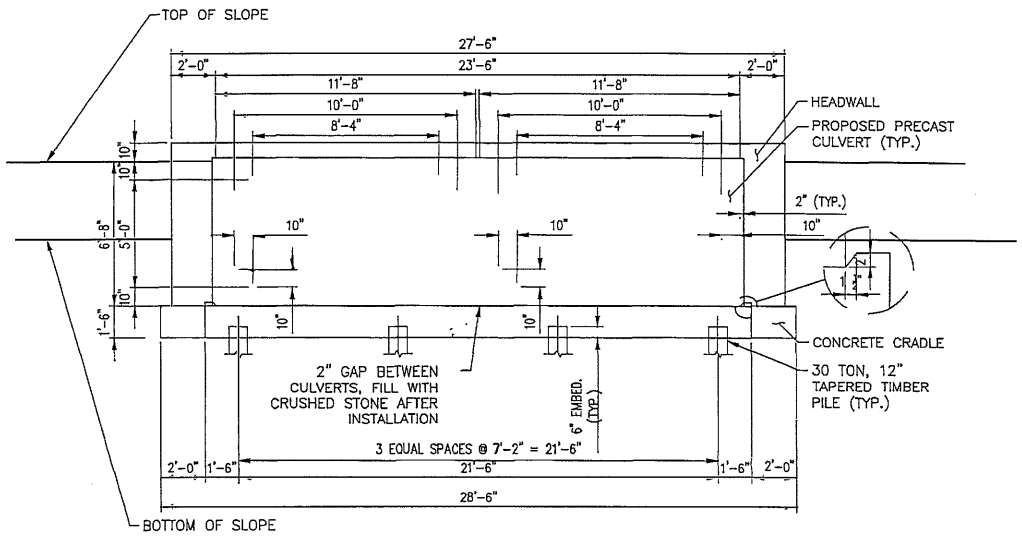

SECTION A-A

OCT 1 5 2019

STRUCTURAL PLAN LOCATION #2 – ELDA LAKE	CARLLS RIVER WATERSHED PROJECT DRAFT PROGRESS PLANS DECEMBER 2018			
DESIGNED BY: CHECKED BY: DRAWN BY: COMPARED BY:	NV5 40 MARCUS DRIVE, SUITE 201 MELVILLE, NEW YORK 11747 P:631.891.3200 WWW.NV5.COM	PROJECT NUMBER: 728518-000340		
		SCALE N.T.S.	DWG. NO SP2-03	SHEET NO. 78

SYMBOL	DESCRIPTION	DATE
R E V I S I O N S		

USACE FILE: NAN-2019-00907-EMI

S:\Project\728518-0000340.00-Carlls River Watershed Design Project\Technical\Cadd\Plan Sheets\US Army Corps\05-04-Structural Plans - Location 2.dwg

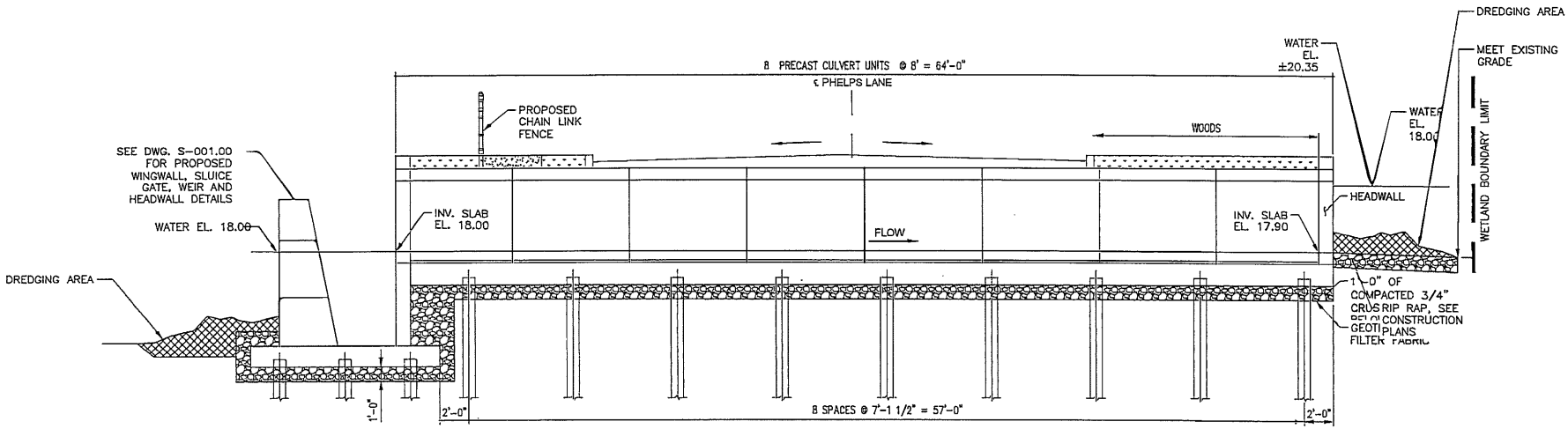

ELEVATION B-B

OCT 15 2019

STRUCTURAL PLAN LOCATION #2 – ELDA LAKE	CARLLS RIVER WATERSHED PROJECT DRAFT PROGRESS PLANS DECEMBER 2018			SYMBOL	DESCRIPTION	DATE
DESIGNED BY: CHECKED BY: DRAWN BY: COMPARED BY:	NV5 40 MARCUS DRIVE, SUITE 201 MELVILLE, NEW YORK 11747 P: 631.891.3200 WWW.NV5.COM	PROJECT NUMBER: 728518-000340		REVISIONS	
		SCALE N.T.S.	DWG. NO SP2-03	SHEET NO. 79	

USACE FILE: NAN-2019-00907-EMI

S:\Project\728518-0000340.00-Carlls River Watershed Design Project\Technical\Cadd\Plan Sheets\US Army Corps\05-06-Sluice Gate Details - Location 2.dwg

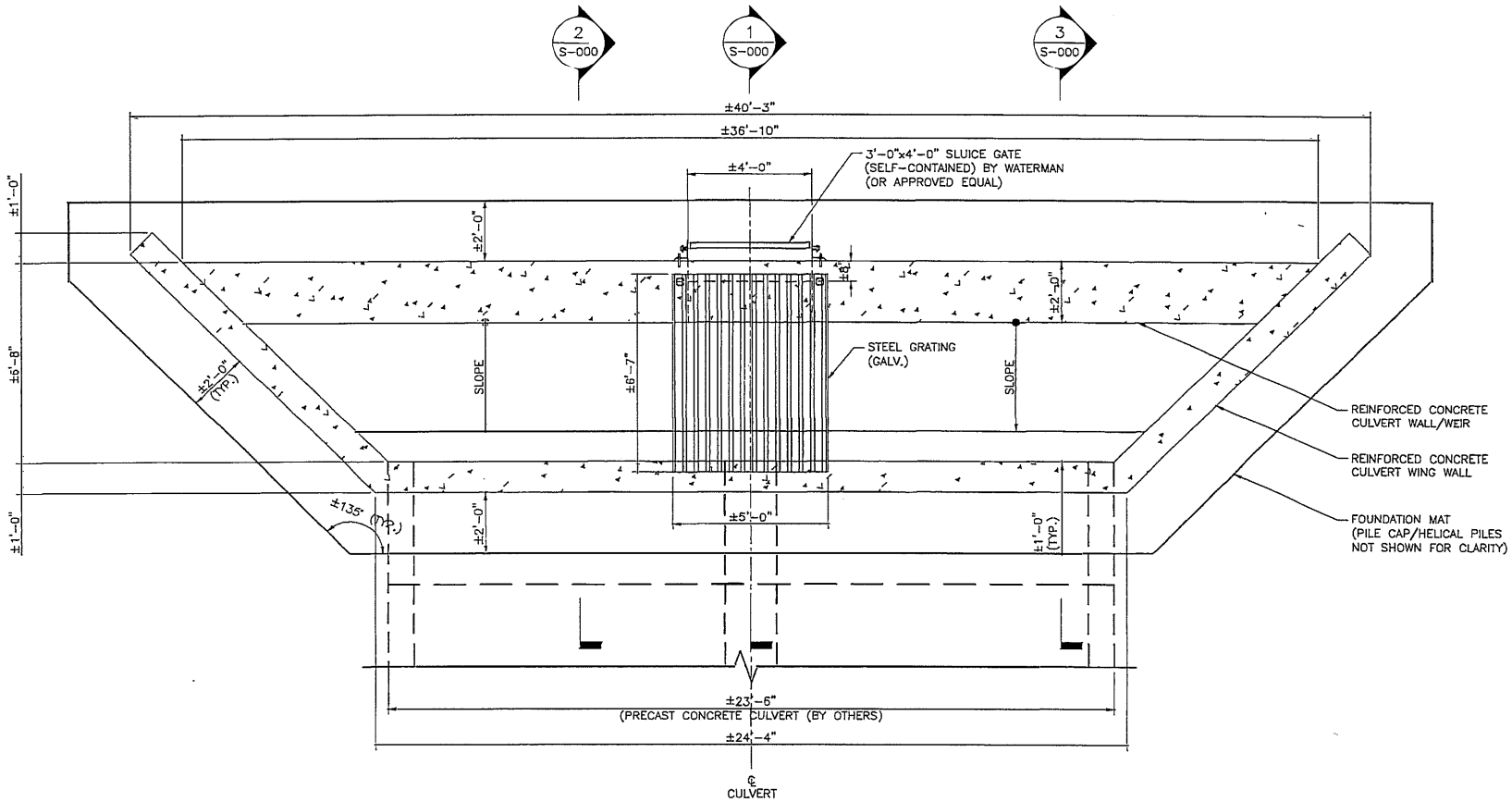

A CULVERT, WING WALL & SLUICE GATE PLAN
3/16" = 1'-0"

OCT 1 5 2019

SLUICE GATE DETAILS LOCATION #2 – ELDA LAKE	CARLLS RIVER WATERSHED PROJECT DRAFT PROGRESS PLANS DECEMBER 2018	
DESIGNED BY: CHECKED BY: DRAWN BY: COMPARED BY:	NV5 40 MARCUS DRIVE, SUITE 201 MELVILLE, NEW YORK 11747 P: 631.891.3200 WWW.NV5.COM	PROJECT NUMBER: 728518-000340

SCALE	DWG. NO	SHEET NO.
AS SHOWN	SG2-03	85

SYMBOL	DESCRIPTION	DATE

REVISIONS

USACE FILE: NAN-2019-00907-EMI

S:\Project\728518-0000340.00-Carlls River Watershed Design Project\Technical\Cadd\Plan Sheets\US Army Corps\05-06-Sluice Gate Details - Location 2.dwg

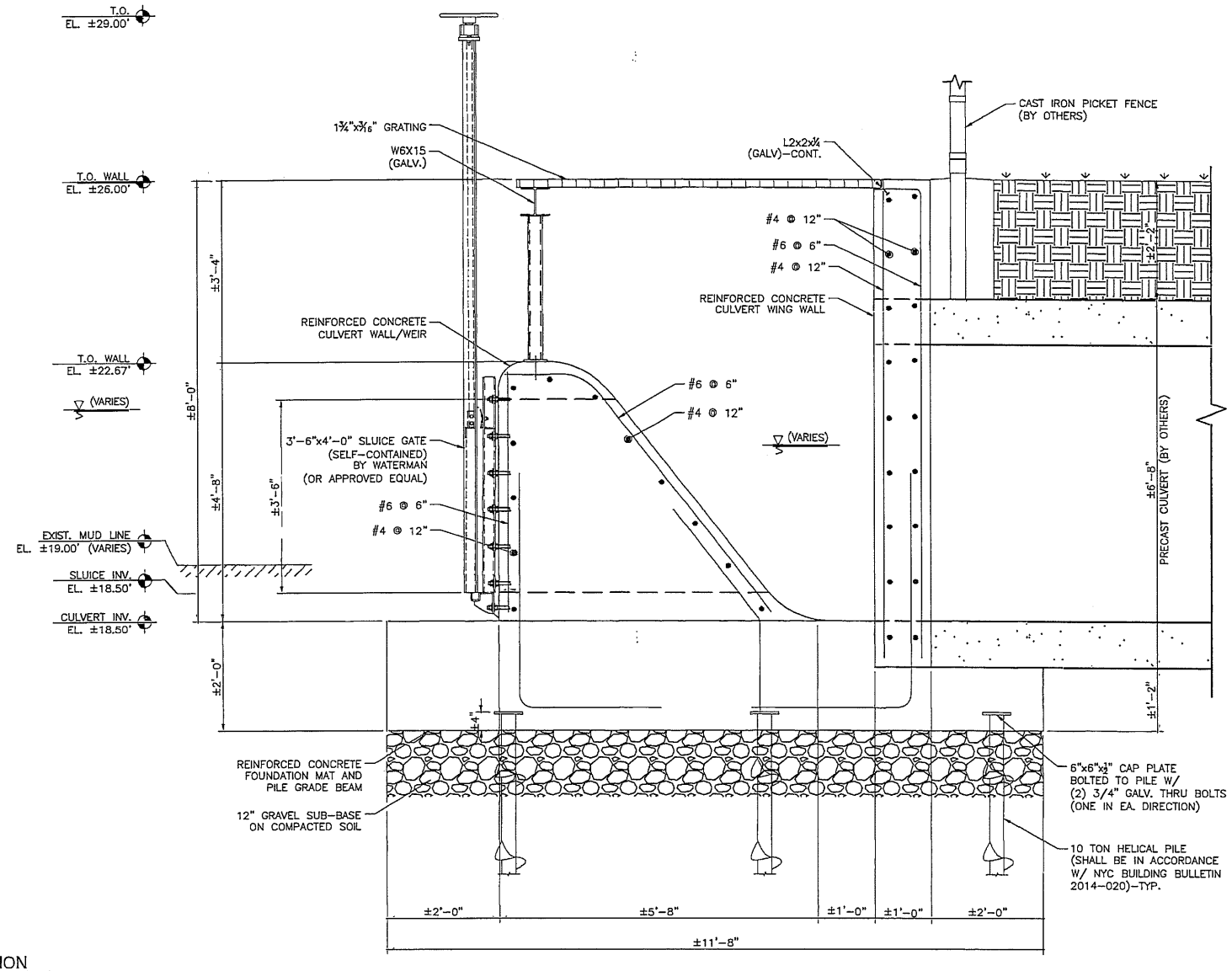

2 SECTION
3/8" = 1'-0"

OCT 15 2019

SLUICE GATE DETAILS LOCATION #2 – ELDA LAKE	CARLLS RIVER WATERSHED PROJECT DRAFT PROGRESS PLANS DECEMBER 2018				
DESIGNED BY:	NV5 40 MARCUS DRIVE, SUITE 201 MELVILLE, NEW YORK 11747 P: 631.891.3200 WWW.NV5.COM	PROJECT NUMBER: 728518-000340			
CHECKED BY:		SCALE AS SHOWN	DWG. NO SG2-06	SHEET NO. 88	SYMBOL / DESCRIPTION / DATE
DRAWN BY:					REVISIONS
COMPARED BY:					

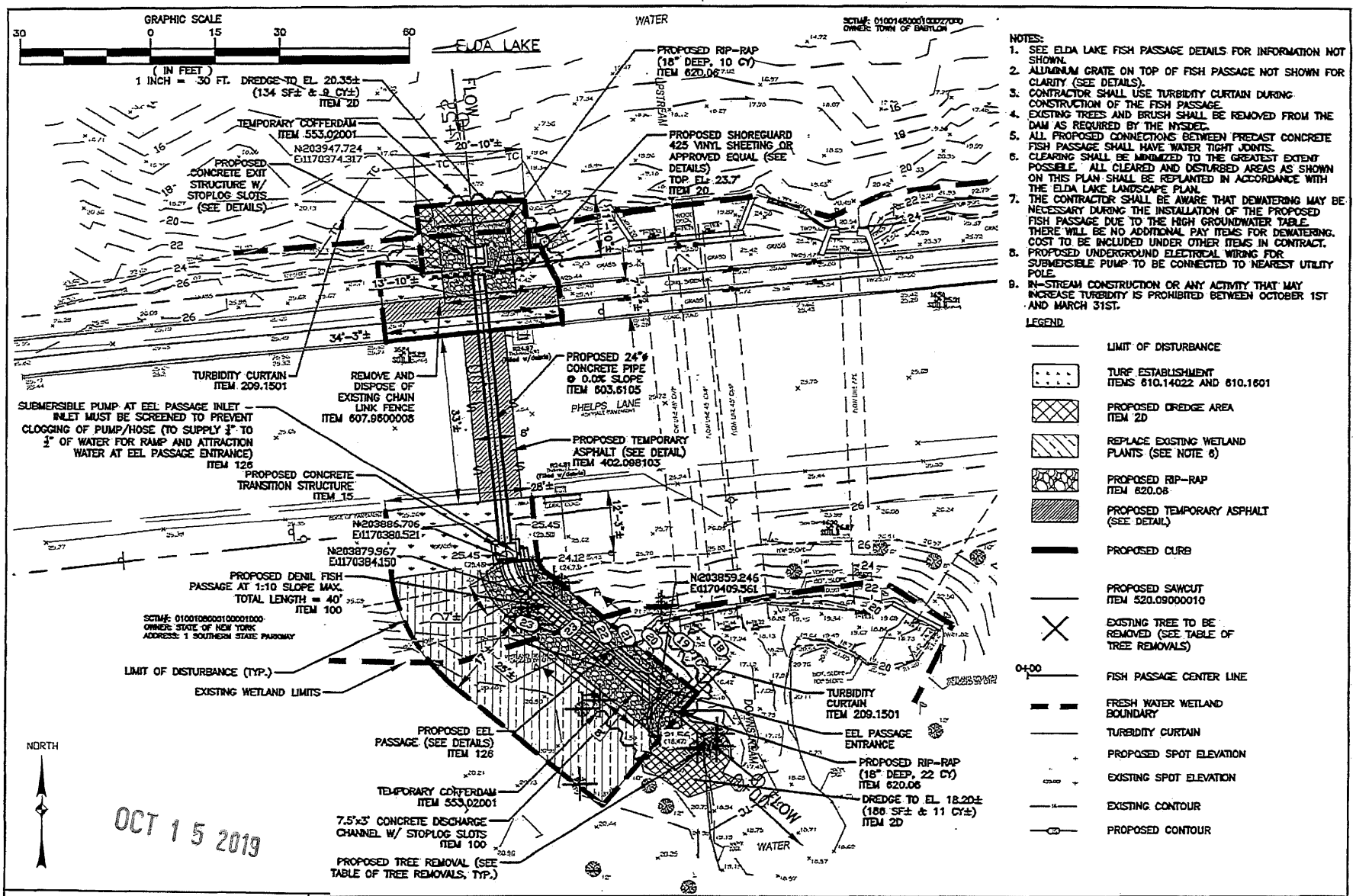

NOTES:

1. SEE ELDA LAKE FISH PASSAGE DETAILS FOR INFORMATION NOT SHOWN.
2. ALUMINUM GRATE ON TOP OF FISH PASSAGE NOT SHOWN FOR CLARITY (SEE DETAILS).
3. CONTRACTOR SHALL USE TURBIDITY CURTAIN DURING CONSTRUCTION OF THE FISH PASSAGE.
4. EXISTING TREES AND BRUSH SHALL BE REMOVED FROM THE DAM AS REQUIRED BY THE NYSDEC.
5. ALL PROPOSED CONNECTIONS BETWEEN PRECAST CONCRETE FISH PASSAGE SHALL HAVE WATER TIGHT JOINTS.
6. CLEARING SHALL BE MINIMIZED TO THE GREATEST EXTENT POSSIBLE. ALL CLEARED AND DISTURBED AREAS AS SHOWN ON THIS PLAN SHALL BE REPLANTED IN ACCORDANCE WITH THE ELDA LAKE LANDSCAPE PLAN.
7. THE CONTRACTOR SHALL BE AWARE THAT DEWATERING MAY BE NECESSARY DURING THE INSTALLATION OF THE PROPOSED FISH PASSAGE DUE TO THE HIGH GROUNDWATER TABLE. THERE WILL BE NO ADDITIONAL PAY ITEMS FOR DEWATERING. COST TO BE INCLUDED UNDER OTHER ITEMS IN CONTRACT.
8. PROPOSED UNDERGROUND ELECTRICAL WIRING FOR SUBMERSIBLE PUMP TO BE CONNECTED TO NEAREST UTILITY POLE.
9. IN-STREAM CONSTRUCTION OR ANY ACTIVITY THAT MAY INCREASE TURBIDITY IS PROHIBITED BETWEEN OCTOBER 1ST AND MARCH 31ST.

LEGEND

- LIMIT OF DISTURBANCE
- TURF ESTABLISHMENT ITEMS 610.14022 AND 610.1601
- PROPOSED DREDGE AREA ITEM 2D
- REPLACE EXISTING WETLAND PLANTS (SEE NOTE 6)
- PROPOSED RIP-RAP ITEM 620.06
- PROPOSED TEMPORARY ASPHALT (SEE DETAIL)
- PROPOSED CURB
- PROPOSED SAWCUT ITEM 520.09000010
- EXISTING TREE TO BE REMOVED (SEE TABLE OF TREE REMOVALS)
- 0+00 FISH PASSAGE CENTER LINE
- FRESH WATER WETLAND BOUNDARY
- TURBIDITY CURTAIN
- PROPOSED SPOT ELEVATION
- EXISTING SPOT ELEVATION
- EXISTING CONTOUR
- PROPOSED CONTOUR

ELDA LAKE FISH PASSAGE GENERAL PLAN	L. K. McLEAN ASSOCIATES, P.C.	CARLLS RIVER WATERSHED PROJECT DRAFT PROGRESS PLANS DECEMBER 2018	
DESIGNED BY:	NV5 40 MARCUS DRIVE, SUITE 201 MELVILLE, NEW YORK 11747 P: 631.891.3200 WWW.NV5.COM	PROJECT NUMBER: 728518-000340	
CHECKED BY:			
DRAWN BY:			
COMPARED BY:		SCALE / DWG. NO / SHEET NO.	SYMBOL / DESCRIPTION / DATE — REVISIONS

Aug 13, 2019 – 02:50pm C:\Users\cpuden\appdata\local\temp\AcPublish_15292\B Sx11 Elda Lake General Plan.dwg

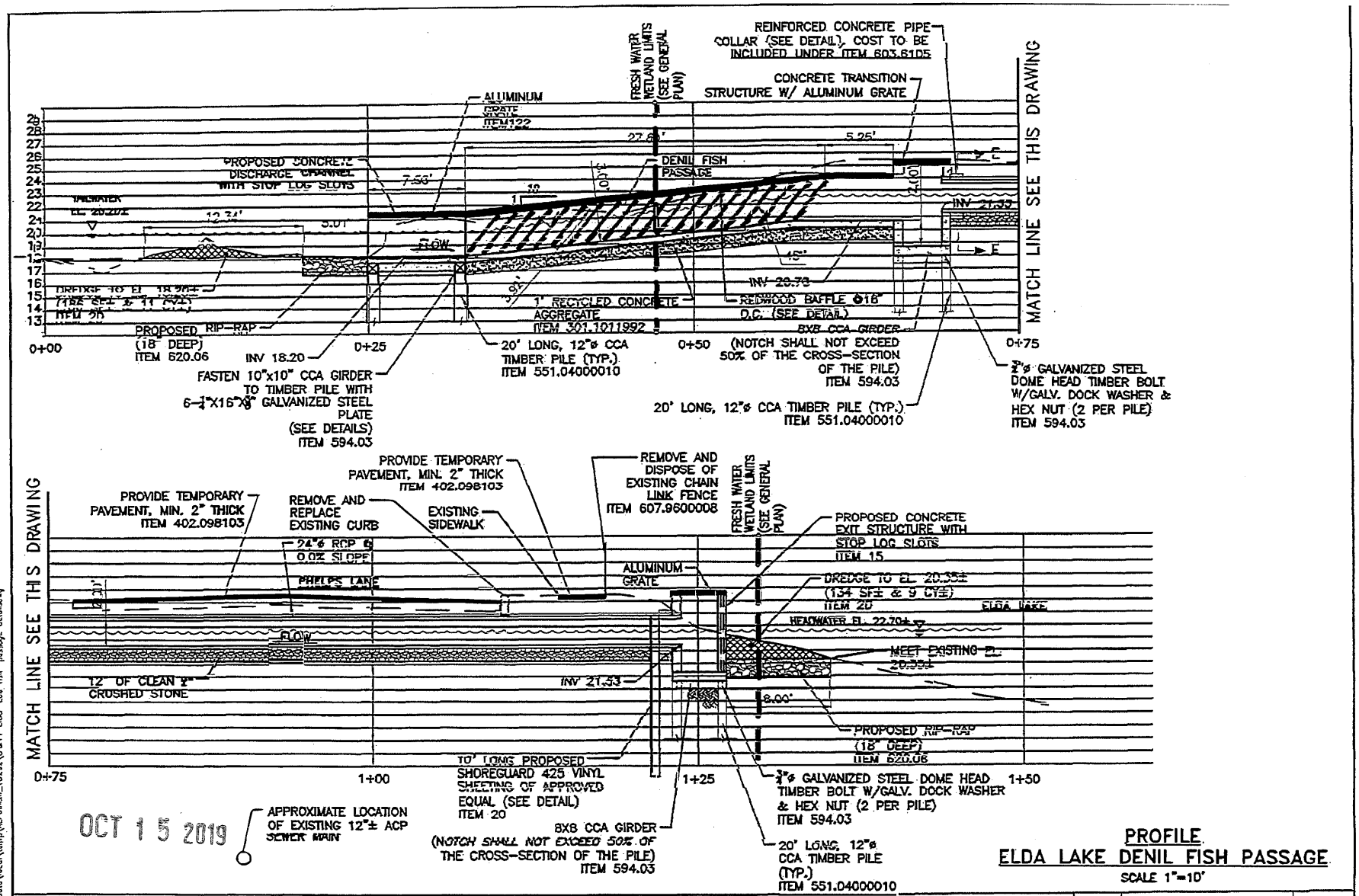

PROFILE
ELDA LAKE DENIL FISH PASSAGE
SCALE 1"=10'

ELDA LAKE FISH PASSAGE DETAILS – 1	L. K. McLEAN ASSOCIATES, P.C.	CARLLS RIVER WATERSHED PROJECT DRAFT PROGRESS PLANS DECEMBER 2018			
DESIGNED BY:	NV5 40 MARCUS DRIVE, SUITE 201 MELVILLE, NEW YORK 11747 P: 631.891.3200 WWW.NV5.COM	PROJECT NUMBER: 728518-000340			
CHECKED BY:		SCALE	DWG. NO	SHEET NO.	SYMBOL / DESCRIPTION / DATE
DRAWN BY:					REVISIONS
COMPARED BY:					

Aug 13, 2019 – 02:03pm C:\Users\Cyuen\appdata\local\temp\AcPublish_15292\(0.511) Elda Lake fish passage detailed.dwg

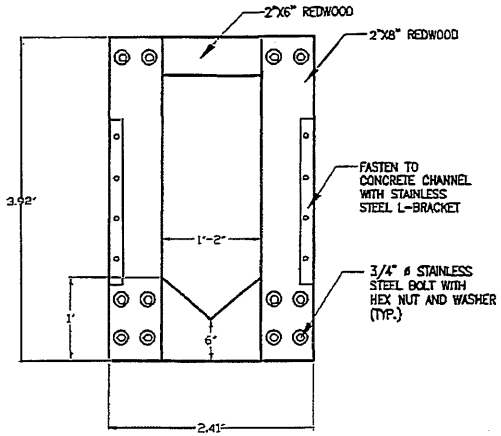

REDWOOD BAFFLE (ITEM 100)

N.T.S.

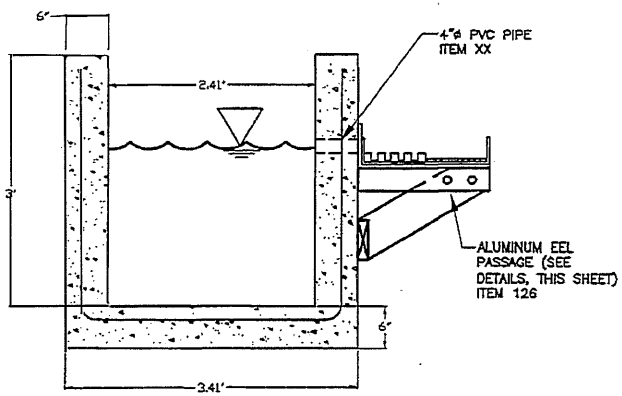

SECTION A–A: DISCHARGE CHANNEL

N.T.S.

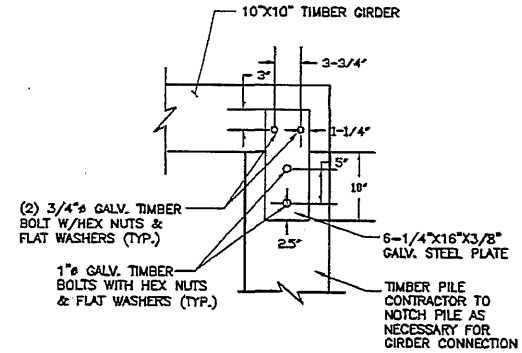

TYPICAL GIRDER CONNECTION DETAIL

N.T.S.

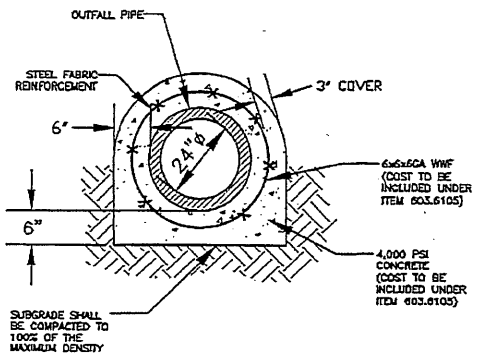

SECTION E–E

N.T.S.

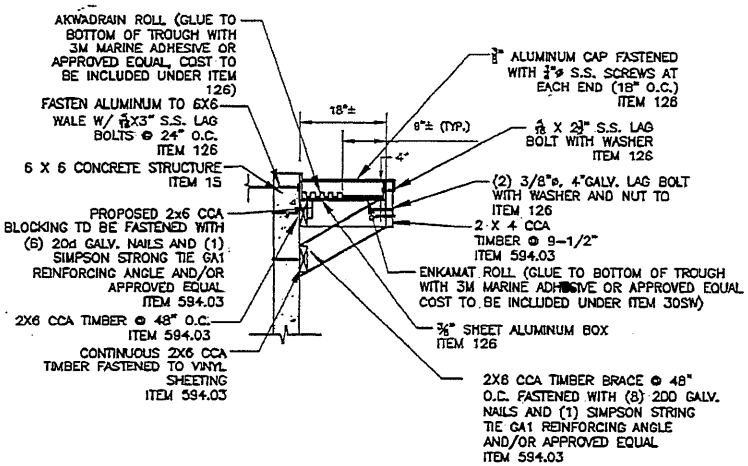

EEL PASSAGE ALUMINUM BOX & BRACKET DETAIL (ITEM 126)

N.T.S.

OCT 1 5 2019

ELDA LAKE FISH PASSAGE DETAILS – 2	L. K. McLEAN ASSOCIATES, P.C. CONSULTING ENGINEERS	CARLLS RIVER WATERSHED PROJECT DRAFT PROGRESS PLANS DECEMBER 2018			
DESIGNED BY:	NV5 40 MARCUS DRIVE, SUITE 201 MELVILLE, NEW YORK 11747 P: 631.891.3200 WWW.NV5.COM	PROJECT NUMBER: 728518–000340			
CHECKED BY:					
DRAWN BY:		SCALE	DWG. NO	SHEET NO.	SYMBOL / DESCRIPTION / DATE — REVISIONS
COMPARED BY:					

Aug 13, 2019 – 02:03pm
C:\Users\Cyrun\appdata\local\temp\AcPublish_15292\8.5x11 Elda Lake fish passage details.dwg

NATIONWIDE GENERAL PERMIT COMPLIANCE CERTIFICATION AND REPORT FORM

Permit File Number: NAN-2019-00907-EMI
Permittee: Town of Babylon
Location: Southern End of Elda Lake, North Babylon, Town of Babylon, Suffolk County, New York

Date Permit Letter Issued: OCT 1 5 2019

Within 30 days of the completion of the activity authorized by this nationwide general permit and any mitigation required in the verification letter, please sign this certification and return it to the address at the bottom of this form.

Please note that your permitted activity is subject to a compliance inspection by a U.S. Army Corps of Engineers representative. If you fail to comply with the permit's terms and conditions you are subject to permit suspension, modification or revocation.

I hereby certify that the work authorized by the above referenced nationwide general permit has been completed in accordance with the terms and conditions of said permit, and required mitigation was completed in accordance with the permit conditions.

_____ _____
Signature of Permittee **Date**

FOLD THIS FORM INTO THIRDS, WITH THE BOTTOM THIRD FACING OUTWARD. TAPE IT TOGETHER AND MAIL TO THE ADDRESS BELOW OR FAX (212) 264-4260.

PLACE STAMP HERE

DEPARTMENT OF THE ARMY
NEW YORK DISTRICT CORPS OF ENGINEERS
JACOB K. JAVITS FEDERAL BUILDING
ATTN: CENAN-OP-RE
NEW YORK, NEW YORK 10278-0090

DEPARTMENT OF THE ARMY
U.S. ARMY CORPS OF ENGINEERS, NEW YORK DISTRICT
JACOB K. JAVITS FEDERAL BUILDING
26 FEDERAL PLAZA
NEW YORK NEW YORK 10278-0090

OCT 1 5 2019

REGULATORY BRANCH

SUBJECT: Department of the Army Permit Application File Number NAN-2019-00908-EMI by the Town of Babylon for Culvert Replacement between Argyle Lake and the Carll's River, in the Village of Babylon, Town of Babylon, Suffolk County, New York

1. PERMITTEE:
Town of Babylon
Department of Coastal and Environmental Management
Attn: Richard Groh
281 Phelps Drive, Room 23
North Babylon, New York 111703

2. On July 19, 2019 the New York District of the U.S. Army Corps of Engineers received a request for Department of the Army authorization to remove and replace an existing approximately 55-inch-wide by 36-inch-long spillway with a new approximately four-foot-wide by four-foot-long sluice gate and an approximately 16-foot-wide by 12-foot-long weir box will be installed on the upstream side of a new spillway and two (2) 36-inch diameter culvert pipes. The weir box will be installed over approximately 7-cubic yards of riprap placed below the plane of Ordinary High Water and will be located within the footprint of an existing hardened apron. Approximately 25-cubic yards of material will be dredged over an area of approximately 220-square feet for the installation of the new sluice gate and weir wall. Dredged material will be placed in an upland hay-baled location for storage and dewatering. A temporary cofferdam and turbidity curtain will be utilized during construction and the construction area will be temporarily dewatered. The project is located at the Southern End of Argyle Lake in the Village of Babylon, Town of Babylon, Suffolk County, New York.

3. The specific applicant-provided details are as shown on the attached permit drawings titled "Carll's River Watershed Project Draft Progress Plans" dated May 2019, prepared by NV5.

4. This determination covers only the work described in the submitted material. Any major changes in the project may require additional authorizations from the New York District of the U.S. Army Corps of Engineers.

5. Based on the information submitted to this office and accomplishment of any required notification in accordance with the applicable federal requirements, our review of the subject work indicates that an individual Department of the Army permit is not required. It appears that the activities within the jurisdiction of this office could be accomplished under Department of the Army Nationwide General Permit Number 3 MAINTENANCE, Number 19 MINOR DREDGING, and Number 33 TEMPORARY CONSTRUCTION, ACCESS, AND DEWATERING and in accordance with Section 10 of the Rivers and Harbors Act of

1899 (33 U.S.C. 403) and Section 404 of the Clean Water Act (33 U.S.C. 1344). The nationwide permits are prescribed at Reissuance of Nationwide Permits in the Federal Register dated January 6, 2017 (82 FR 1860). The subject work may be performed without further authorization from this office provided it complies with Sections A through D, Number 3 MAINTENANCE, Number 19 MINOR DREDGING, and Number 33 TEMPORARY CONSTRUCTION, ACCESS, AND DEWATERING; New York District regional conditions; the following work-specific Special Conditions listed below; and any applicable regional conditions added by the State of New York.

6. Other than the work-specific Special Conditions listed below, the 2017 nationwide general permits in the State of New York, including their final regional conditions, water quality certifications, and coastal zone concurrence statements are available at:

https://www.nan.usace.army.mil/Portals/37/docs/regulatory/publicnotices/Regional%20Gen%20Permit/PN-LRB%20NAN%20FinalRegionalConditionsWQC%20CZMforNYdated%2021-MAR-2017.pdf?ver=2017-03-22-111131-070

If you require a specific paper copy, please contact our Regulator-of-the-Day at 917-790-8511 to request one be mailed to you. Please be sure to have the above eighteen-character file number readily available when you call.

7. Work-specific Special Conditions:

A. The permittee understands and agrees that, if future operations by the United States require the removal, relocation, or other alteration, of the structure or work herein authorized, or if, in the opinion of the Secretary of the Army or his authorized representative, said structure or work shall cause unreasonable obstruction to the free navigation of the navigable waters, the permittee will be required, upon due notice from the Corps of Engineers, to remove, relocate, or alter the structural work or obstructions caused thereby, without expense to the United States. No claim shall be made against the United States on account of any such removal or alteration.

B. The permittee shall sign and submit the attached compliance certification form to this office **within 30 days of COMPLETION** of the regulated activity authorized by this permit and any mitigation work required by Special Condition.

C. The permittee, and their agents, shall take actions to prevent construction materials, including debris, from entering any waterway to become drift or pollution hazards.

D. The permittee, and their agents, shall restore temporarily impacted wetlands or

waters of the United States to their pre-construction elevations and re-seed or plant these areas with native vegetation. The permittee shall install appropriate temporary fencing around all on-site wetlands and waters of the United States not authorized herein to be impacted and other sensitive ecological areas during construction periods, to prevent equipment and personnel from entering these areas.

E. The permittee, and their agents, shall avoid in-water work at Elda Lake from March 1 to June 30, of any calendar year to minimize impacts to migrating and spawning anadramous fish. If Elda Lake is done prior to the opening of Southard's Pond to migratory fish passage, the seasonal restriction is not needed for Elda Lake as long as turbidity barriers are utilized.

F. The permittee, and their agents, shall develop and implement a maintenance plan for the proposed new structures and submit to the USACE, New York District, Operations Regulatory Branch, 26 Federal Plaza, Room 16-406, New York, New York 10278 and to National Oceanic and Atmospheric Administration/National Marine Fisheries Service, James J. Howard Marine Sciences Laboratory, Mid-Atlantic Field Offices Supervisor, 74 Magruder Road, Highlands, New Jersey 07732 by the completion of project construction.

8. Please note that this nationwide general permit (NWGP) verification is based on a preliminary jurisdictional determination (JD). A preliminary jurisdictional determination (JD) is not appealable. If you wish, prior to commencement of the authorized work you may request an approved jurisdictional determination (JD), which may be appealed, by contacting the New York District, US Army Corps of Engineers for further instructions. To assist you in this decision and address any questions you may have on the differences between preliminary and approved jurisdictional determinations, please review US Army Corps of Engineers Regulatory Guidance Letter Number 16-01, which can be found at:

https://usace.contentdm.oclc.org/utils/getfile/collection/p16021coll9/id/1256

9. This verification is valid until March 18, 2022, unless the nationwide general permits are modified, reissued, or revoked before then. This verification will remain valid until March 18, 2022, if the subject work activity complies with the terms of any subsequent modifications of the nationwide general permits. If the nationwide general permits are suspended, revoked, or modified in such a way that the subject activity would no longer comply with the terms and conditions of a nationwide general permit, and the proposed work activity has commenced, or is under contract to commence, the permittee will have twelve (12) months from the date of such permit action to complete the regulated work.

This authorization is conditional on the permittee's receipt of the required water quality certificate or waiver from the New York State Department of Environmental

Conservation (NYSDEC). No work may be accomplished until the required approval or waiver from NYSDEC has been obtained.

This authorization is conditional on the permittee's receipt of the required coastal zone management concurrence or waiver from the New York State Department of State (NYSDOS). No work may be accomplished until the required approval or waiver from NYSDOS has been obtained.

10. In order for us to better serve you and others, please complete our Customer Service Survey located at:

http://www.nan.usace.army.mil/Missions/Regulatory/CustomerSurvey.aspx

11. Any inquiries should be directed to our Regulator-of-the-Day at 917-790-8511. Please be sure to have the above eighteen-character file number readily available when you call.

Ronald R. Pinzon
Chief, Eastern Section

Enclosures (2)
1. Dated Permit Drawings
2. Completion Form

Copies Furnished:
Land Use Ecological Services Inc.
Attn: William Bowman
570 Expressway Drive South, Suite 2F
Medford, New York 11763

USACE FILE: NAN-2019-00908-EM1

TOWN OF BABYLON
SUFFOLK COUNTY, NEW YORK

CARLLS RIVER WATERSHED PROJECT
DRAFT PROGRESS PLANS

MAY 2019

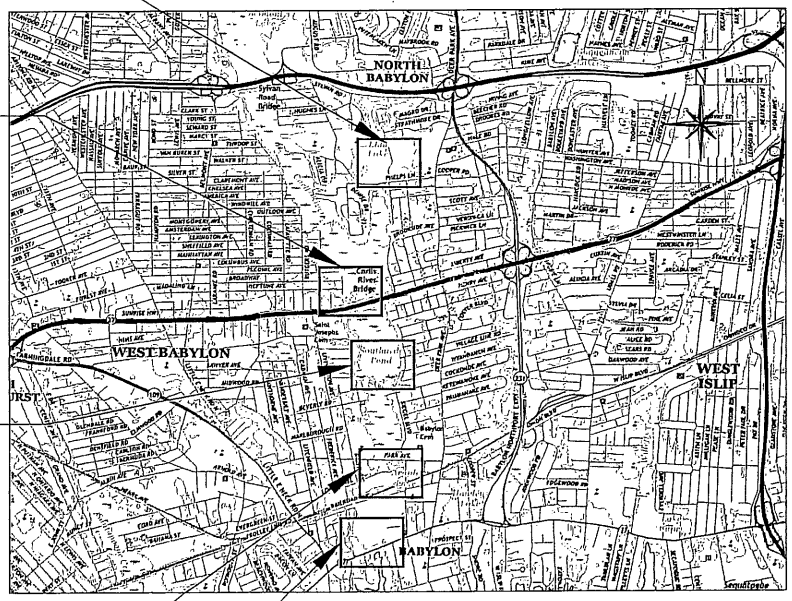

LOCATION MAP

N.T.S.

LOCATION #4
ARGYLE LAKE

OCT 15 2019

ALL WORK CONTEMPLATED UNDER THIS CONTRACT SHALL BE COVERED BY AND IN CONFORMITY WITH THE CURRENT NYSDOT STANDARD SPECIFICATIONS DATED 09/01/2018 (U.S. CUSTOMARY UNITS), EXCEPT AS MODIFIED ON THIS PLAN AND IN THE ITEMIZED PROPOSAL.

NYS EDUCATION LAW NOTE:

IT IS VIOLATION OF NYS EDUCATION LAW FOR ANY PERSON TO ALTER A DOCUMENT IN ANY WAY, UNLESS ACTING UNDER THE DIRECTION OF A LICENSED PROFESSIONAL ENGINEER. IF A DOCUMENT BEARING THE SEAL OF AN ENGINEER IS ALTERED, THE ALTERING ENGINEER SHALL AFFIX TO THE DOCUMENT THEIR SEAL AND THE NOTATION "ALTERED BY" FOLLOWED BY THEIR SIGNATURE AND THE DATE OF SUCH ALTERATION, AND A SPECIFIC DESCRIPTION OF THE ALTERATION.

PREPARED BY:

NV5

40 MARCUS DRIVE, SUITE 201
MELVILLE, NEW YORK 11747
P: 631.891.3200 WWW.NV5.COM

USACE FILE: NAN-2019-00908-EMI

S:\Project\728518-0000340.00-Carlls River Watershed Design Project\Technical\Cadd\Plan Sheets\US Army Corps\07-01-Existing Conditions Plans - Location 4.dwg

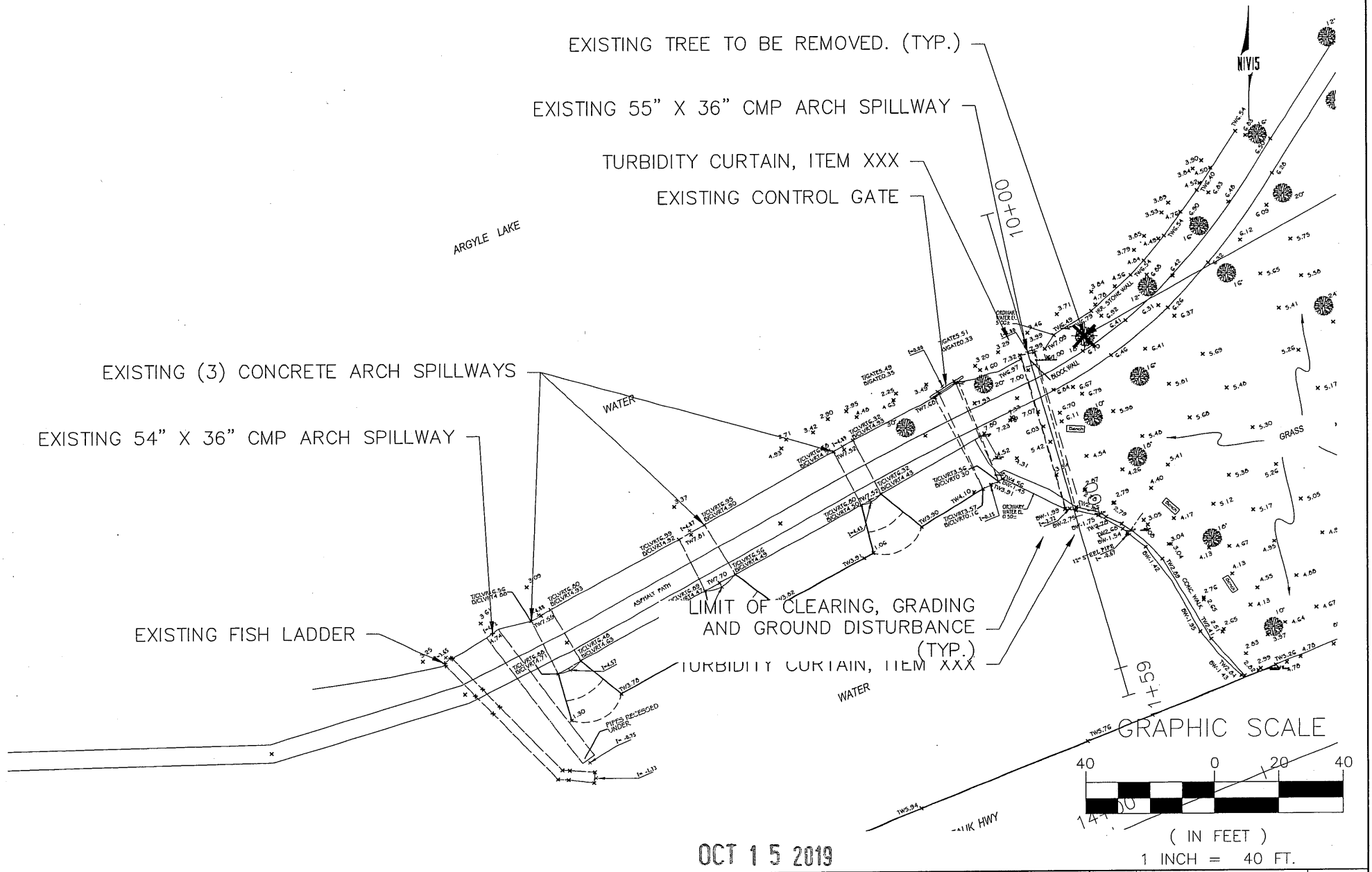

OCT 15 2019

EXISTING CONDITIONS PLAN LOCATION #4 – ARGYLE LAKE	CARLLS RIVER WATERSHED PROJECT DRAFT PROGRESS PLANS DECEMBER 2018			2 OF 5	
DESIGNED BY:	NV5 40 MARCUS DRIVE, SUITE 201 MELVILLE, NEW YORK 11747 P: 631.891.3200 WWW.NV5.COM	PROJECT NUMBER: 728518-000340		SYMBOL	DESCRIPTION / DATE
CHECKED BY:		SCALE 1"=40'-0"	DWG. NO CP4-01	REVISIONS	
DRAWN BY:			SHEET NO. 114		
COMPARED BY:					

USACE FILE: NAN-2019-00908-EMI

S:\Project\728518-0000340.00-Carlls River Watershed Design Project\Technical\Cadd\Plan Sheets\US Army Corps\07-02-Construction Plans - Location 4.dwg

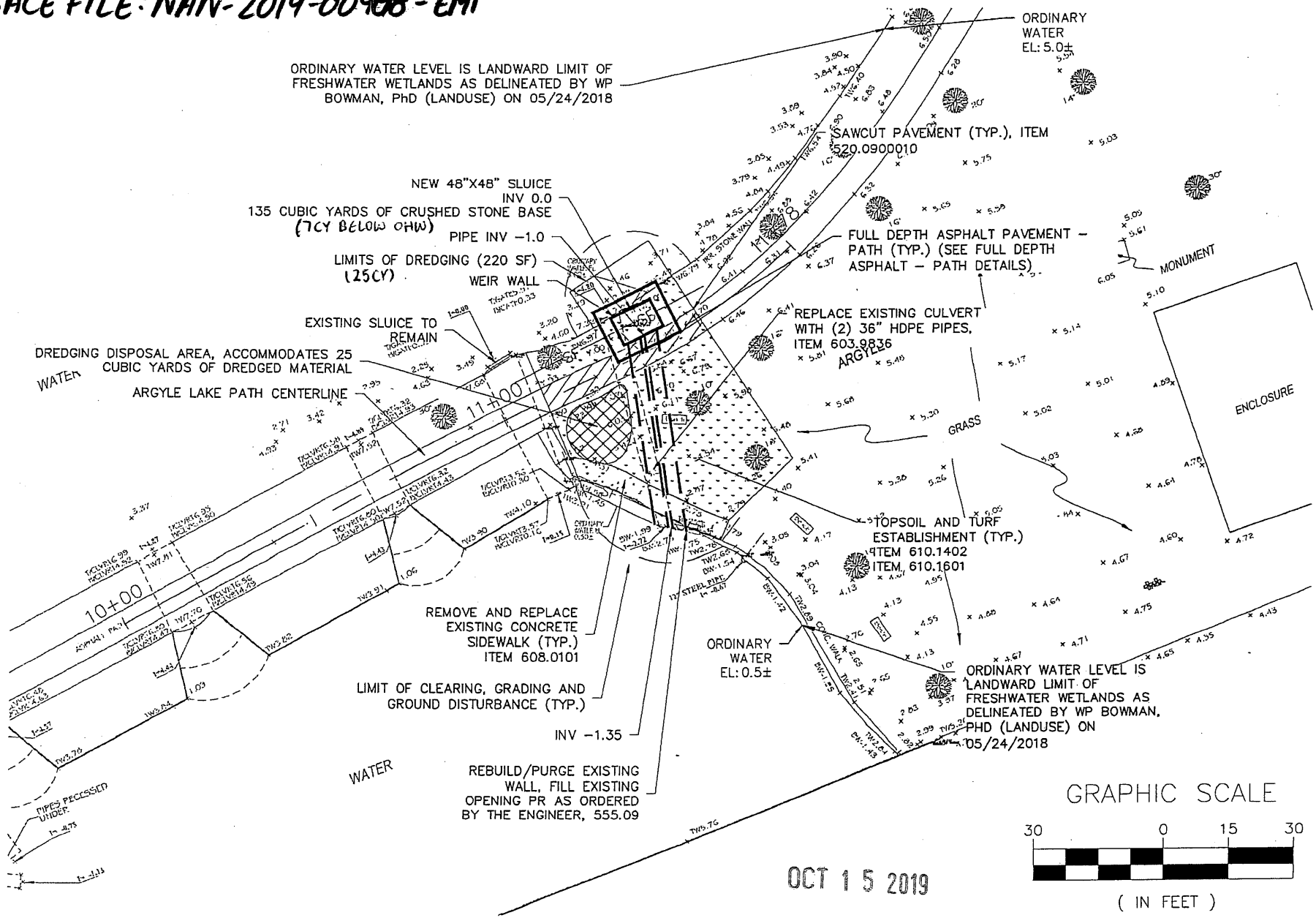

OCT 15 2019

CONSTRUCTION PLAN LOCATION #4 - ARGYLE LAKE	CARLLS RIVER WATERSHED PROJECT DRAFT PROGRESS PLANS DECEMBER 2018			
DESIGNED BY:	NV5 40 MARCUS DRIVE, SUITE 201 MELVILLE, NEW YORK 11747 P: 631.891.3200 WWW.NV5.COM	PROJECT NUMBER: 728518-000340		
CHECKED BY:		SCALE 1"=40'-0"	DWG. NO CP4-01	SHEET NO. 115
DRAWN BY:				
COMPARED BY:				

3 OF 5

SYMBOL	DESCRIPTION	DATE
REVISIONS		

USACE FILE: NAN-2019-00908-EM1

S:\Project\728518-000340.00-Carlls River Watershed Design Project\Technical\Cadd\Plan Sheets\US Army Corps\07-04-Sluice Gate Details - Location 4.dwg

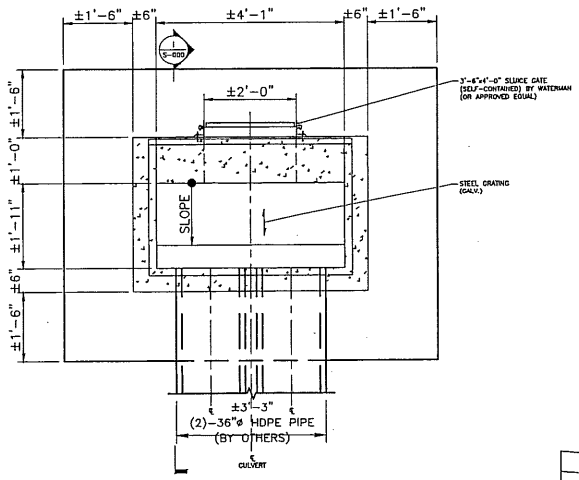

X CULVERT, WING WALL & SLUICE GATE PLAN
1/4" = 1'-0"

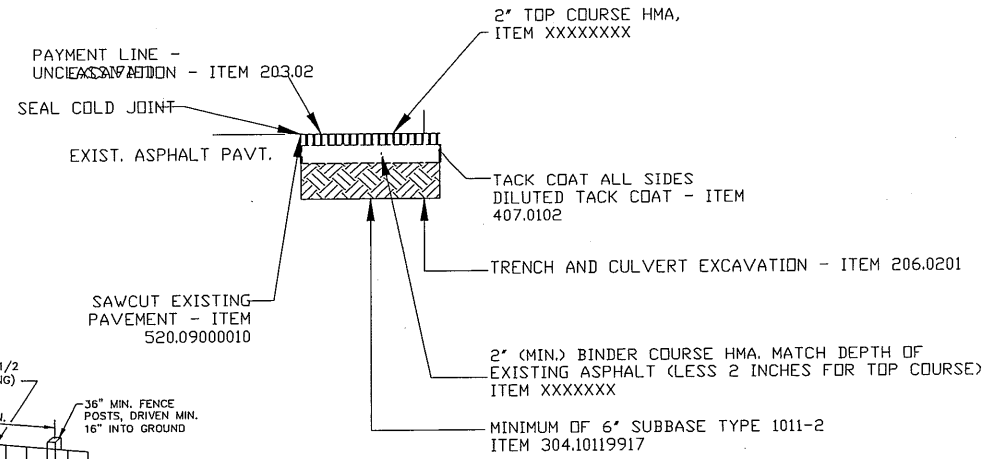

X FULL DEPTH PAVEMENT
N.T.S.

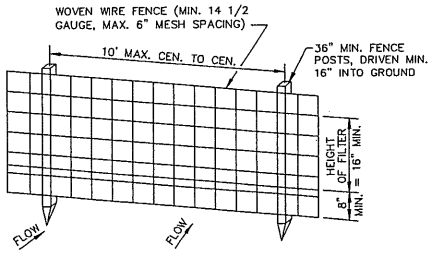

PERSPECTIVE VIEW

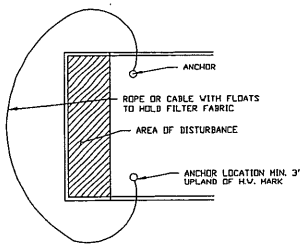

PLAN VIEW

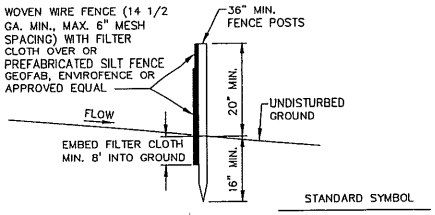

SECTION

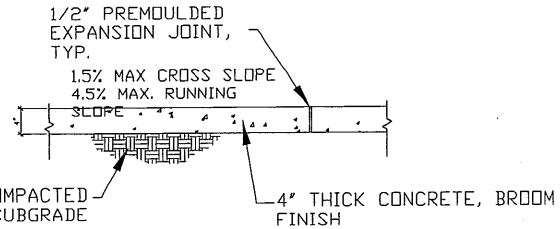

CONCRETE SIDEWALK DETAIL
(ITEM 608.01050010)
N.T.S.

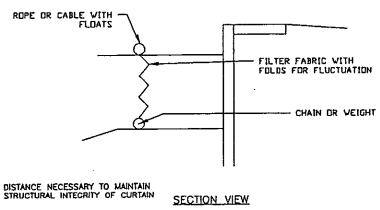

SECTION VIEW

X TURBIDITY CURTAIN
N.T.S.

CONSTRUCTION NOTES FOR FABRICATED SILT FENCE

1. WOVEN WIRE FENCE TO BE FASTENED SECURELY TO FENCE POSTS WITH WIRE TIES OR STAPLES.
2. FILTER CLOTH TO BE FASTENED SECURELY TO WOVEN WIRE FENCE WITH TIES SPACED EVERY 24" AT TOP AND MID SECTION.
3. WHEN TWO SECTIONS OF FILTER CLOTH ADJOIN EACH OTHER THEY SHALL BE OVER-LAPPED BY SIX INCHES AND FOLDED.
4. MAINTENANCE SHALL BE PERFORMED AS NEEDED AND MATERIAL REMOVED WHEN "BULGES" DEVELOP IN THE SILT FENCE.

POSTS: STEEL EITHER T OR U TYPE OR 2" HARDWOOD

FENCE: WOVEN WIRE, 14 1/2 GA. 6" MAX. MESH OPENING

FILTER CLOTH: FILTER X, MIRAFI 100X, STABI-LINKA T140N OR APPROVED EQUAL

PREFABRICATED UNIT: GEOFAB, ENVIROFENCE, OR APPROVED EQUAL

X SILT PROTECTION FENCE
N.T.S.

NOTE:
1. SIDEWALK SHALL BE 4" THICK OR AS NOTED ON THE PLANS.
2. CONCRETE SHALL HAVE A MINIMUM COMPRESSIVE STRENGTH OF 4,000 PSI AT 28 DAYS.
3. PROVIDE BITUMINOUS EXPANSION JOINT (½" WIDTH PREMOULDED BITUMINOUS FILL) AT CURB LINE AND EVERY 20' AND CONTROL JOINT (¼" WIDTH X ¾" DEPTH) EVERY 5'.
4. SIDEWALKS SHALL CONFORM TO CURRENT ADA GUIDELINES.

OCT 15 2019

X CONCRETE SIDEWALK
N.T.S.

SLUICE GATE DETAILS
LOCATION #4 - ARGYLE LAKE

CARLLS RIVER WATERSHED PROJECT
DRAFT PROGRESS PLANS
DECEMBER 2018

DESIGNED BY:
CHECKED BY:
DRAWN BY:
COMPARED BY:

NV5
40 MARCUS DRIVE, SUITE 201
MELVILLE, NEW YORK 11747
P: 631.891.3200 WWW.NV5.COM

PROJECT NUMBER: 728518-000340

SCALE	DWG. NO	SHEET NO.
AS SHOWN	SG4-01	116

4 OF 5

SYMBOL	DESCRIPTION	DATE

REVISIONS

USACE FILE: NAN-2019-00908-EM1

S:\Project\728518-0000340.00-Carlls River Watershed Design Project\Technical\Cadd\Plan Sheets\US Army Corps\07-04-Sluice Gate Details - Location 4.dwg

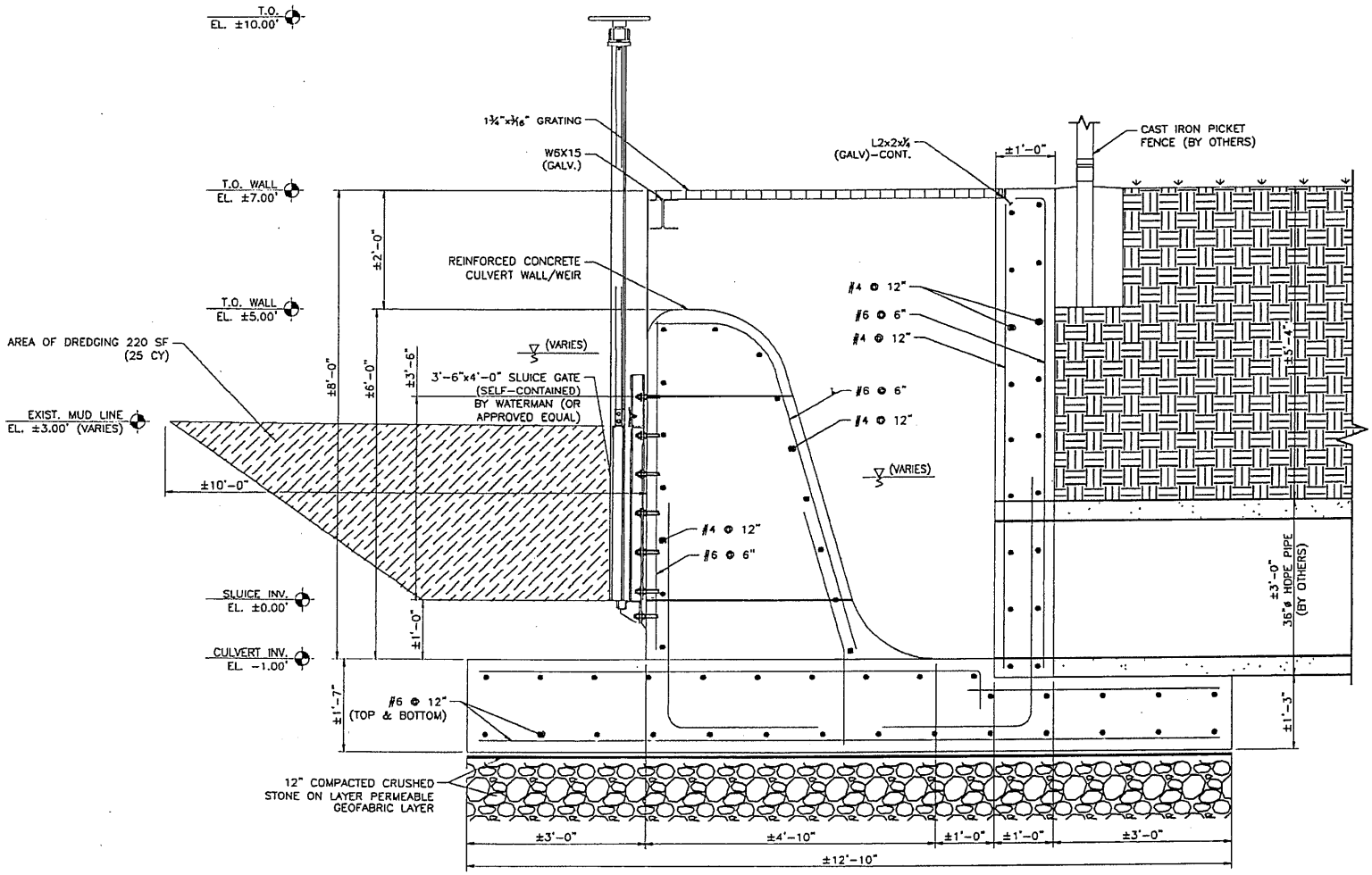

1 SECTION
3/8" = 1'-0"

OCT 15 2019

SLUICE GATE DETAILS LOCATION #4 - ARGYLE LAKE	CARLLS RIVER WATERSHED PROJECT DRAFT PROGRESS PLANS DECEMBER 2018	5 OF 5

DESIGNED BY:
CHECKED BY:
DRAWN BY:
COMPARED BY:

NV5
40 MARCUS DRIVE, SUITE 201
MELVILLE, NEW YORK 11747
P: 631.891.3200 WWW.NV5.COM

PROJECT NUMBER: 728518-000340

SCALE	DWG. NO	SHEET NO.
AS SHOWN	SG4-03	118

SYMBOL	DESCRIPTION	DATE

REVISIONS

NATIONWIDE GENERAL PERMIT COMPLIANCE CERTIFICATION AND REPORT FORM

Permit File Number: NAN-2019-00908-EMI
Permittee: Town of Babylon
Location: Southern End of Argyle Lake, Village of Babylon, Town of Babylon, Suffolk County, New York

Date Permit Letter Issued: OCT 1 5 2019

Within 30 days of the completion of the activity authorized by this nationwide general permit and any mitigation required in the verification letter, please sign this certification and return it to the address at the bottom of this form.

Please note that your permitted activity is subject to a compliance inspection by a U.S. Army Corps of Engineers representative. If you fail to comply with the permit's terms and conditions you are subject to permit suspension, modification or revocation.

I hereby certify that the work authorized by the above referenced nationwide general permit has been completed in accordance with the terms and conditions of said permit, and required mitigation was completed in accordance with the permit conditions.

_____ _____
Signature of Permittee **Date**

FOLD THIS FORM INTO THIRDS, WITH THE BOTTOM THIRD FACING OUTWARD. TAPE IT TOGETHER AND MAIL TO THE ADDRESS BELOW OR FAX (212) 264-4260.

_____
_____
_____

PLACE STAMP HERE

DEPARTMENT OF THE ARMY
NEW YORK DISTRICT CORPS OF ENGINEERS
JACOB K. JAVITS FEDERAL BUILDING
ATTN: CENAN-OP-RE
NEW YORK, NEW YORK 10278-0090

Carey, Jonathan

From: McAllister, James (STORMRECOVERY) <James.McAllister@stormrecovery.ny.gov>
Sent: Tuesday, December 3, 2019 2:07 PM
To: jonathan.carey@wsp.com
Subject: Fwd: Agenda for the 12/5/2019 Bi-weekly Program Update (Meeting #144)

Follow Up Flag: Follow up
Flag Status: Flagged

External

Regards,
James

James P. McAllister
Senior Environmental Project Manager
Bureau of Environmental Review and Assessment
Governor's Office of Storm Recovery
500 Bi-County Boulevard, Suite 300, Farmingdale, NY 11735
O: (631)465-9677 I C: (646)256-9485
James.McAllister@stormrecovery.ny.gov
www.stormrecovery.ny.gov

Begin forwarded message:

> **From:** Richard Groh <rgroh@townofbabylon.com>
> **Date:** December 3, 2019 at 11:37:21 AM EST
> **To:** "Brunner, David" <BrunnerD@liro.com>, "Keyser, Sarah (STORMRECOVERY)" <Sarah.Keyser@stormrecovery.ny.gov>, "James McAllister - GOSR (james.mcallister@stormrecovery.ny.gov)" <james.mcallister@stormrecovery.ny.gov>, "Shultz, Alicia (NYSHCR)" <Alicia.Shultz@nyshcr.org>, "bonnie.lafont@nysandyhelp.ny.gov" <bonnie.lafont@nysandyhelp.ny.gov>, "Lee, Kathy (NYSANDYHELP) (Kathy.Lee@nysandyhelp.ny.gov)" <Kathy.Lee@nysandyhelp.ny.gov>, "Ribeiro, Ray" <RibeiroR@liro.com>, Peter Casserly <pmcass48@gmail.com>, Joseph Ferrandino <jferrandino@townofbabylon.com>, Joseph Guarino <jguarino@townofbabylon.com>, Kathy Lynch <klynch@townofbabylon.com>, Victoria Marotta <vmarotta@townofbabylon.com>, Antonio Martinez <amartinez@townofbabylon.com>, Victoria Russell <vrussell@townofbabylon.com>, Donna Somma <dsomma@townofbabylon.com>, Tom Stay <tstay@townofbabylon.com>, Catherine Wuertz <cwuertz@townofbabylon.com>, Brian Zitani

<bzitani@townofbabylon.com>
Subject: RE: Agenda for the 12/5/2019 Bi-weekly Program Update (Meeting #144)

ATTENTION: This email came from an external source. Do not open attachments or click on links from unknown senders or unexpected emails.

Update on USACE Permits for Carll's per previous correspondence and spoke with Chris from USACE today. The permits will be modified. See yellow highlighted below:

Response from Chris:

"Hi Richard,

I am currently on a rotation program at the NY District Corps Office so I am not in the regulatory permitting section at the moment. Let me speak with some folks in regulatory and I will get back to you next week."

Best Regards,
Richard Groh
Chief Environmental Analyst
Town of Babylon
Department of Coastal and Environmental Management
Room 406
281 Phelps Lane
North Babylon, NY 11703-4045
Phone (631) 422-7640
Fax (631) 422-7686

Certified Floodplain Manager
Town of Babylon Stormwater Management Program Coordinator

From: Richard Groh
Sent: Tuesday, November 26, 2019 6:21 PM
To: Minck, Christopher W
Cc: McAllister, James (STORMRECOVERY); Keyser, Sarah (STORMRECOVERY); Jack Figueiredo; William Bowman; Emily Sweet; James J. Ferraiuolo; Tom Stay; Victoria Russell
Subject: FW: Carll's River Watershed Project Permits (UNCLASSIFIED)

Hi Chris: Hope you are well. Again thank you for all your help on the USACE permits. We had some comments from GOSR and others and just wanted to confirm a few items if that is OK.

- **Argyle has no seasonal restrictions on the permit. I assume that this is because of the existing fish ladder/passage at that location. This was a mistake on the permit, this site will have a seasonal restriction.**

- **Elda has a condition that requires avoidance of in water work from March 1, to June 30 any calendar year but if the Elda work is done before Southard's which is downstream (without fish passage there at this time) there is no seasonal restriction. I interpret avoidance as to the best of our ability to abide by the condition in good faith. This will be modified where the fish passage for Southard's can't be opened until Elda is completed.**

- **Elda and Southard's are not in the coastal zone so NYSDOS should not be required. I believe this language creates problems for GOSR's review. Would it be possible to remove that language on these two permits since the projects are not in the coastal zone? This condition in reference to the coastal zone/NYSDOS Consistency requirement is to be removed.**

Anything you can do to confirm and address as is acceptable and appropriate is greatly appreciated!!! I will be around tomorrow and next week if I can answer any questions.

Best Regards,
Richard Groh
Chief Environmental Analyst
Town of Babylon
Department of Coastal and Environmental Management
Room 406
281 Phelps Lane
North Babylon, NY 11703-4045
Phone (631) 422-7640
Fax (631) 422-7686
Certified Floodplain Manager
Town of Babylon Stormwater Management Program Coordinator

NOTICE: This e-mail and any attached document(s) are intended only for the use of the individual or entity to whom or to which it is addressed and may contain information that is privileged, confidential, proprietary, trade secret and exempt from disclosure. If the reader of this message is not the intended recipient or an employee or agent responsible for delivering the message to the intended recipient, you are hereby notified that any dissemination, distribution, or reproduction of this communication is

strictly prohibited. If you have received this communication in error, please notify us immediately and discard the original message and any attachment(s).

Land Use
Ecological Services, Inc.

July 15, 2019

NYSDEC, Division of Environmental Permits
SUNY at Stony Brook, 50 Circle Drive
Stony Brook, NY 11790
Attn: Ms. Kim Lamiroult

Re: Town of Babylon- Carlls River Watershed Project
Argyle Lake Culvert Replacement
NYSDEC ID#: 1-4720-00863/00023

Dear Ms. Lamiroult:

Enclosed please find a NYSDEC permit application package for the proposed replacement and up-sizing of an existing 55" x 36" CMP (corrugated metal pipe) arch spillway with a new control gate at the Argyle Lake outfall in Babylon Memorial Park. The proposed project at Argyle Lake is intended to provide hydraulic improvements including lowering flooding elevations upstream of the lake and reducing downstream peak flows during storm events. The project is part of a comprehensive watershed management plan for the Carlls River being implemented by the Town of Babylon in conjunction with the Governor's Office of Storm Recovery (GOSR) and the NY Rising Community Reconstruction (NYRCR) Program. Other flood mitigation and stormwater infrastructure improvement projects included in the comprehensive Carlls River Watershed project include the following:

- NYS Route 27 Stormwater Wetland: 1-4720-00556/00010
- Southard's Pond Control Gate and Culverts: 1-4720-00811/02023
- Locust Avenue Culvert Replacement: 1-4720-02115/00011
- Elda Lake Control Gate & Culvert/Fish Passage Improvements: No NYSDEC ID

This application package for the Argyle Lake outfall improvements (NYSDEC ID#: 1-4720-00863/00023) includes the following:

- Joint Application Form. Note that both Town of Babylon (applicant) and Village of Babylon (owner of Babylon Memorial Park) representatives have signed the Joint Application Form.
- Site Plans (4 sets) prepared by NV5 (dated May 2019)
- Project Description
- Short Environmental Assessment Form
- D-1 Dam Safety Supplemental Form
- Structural and Archaeological Assessment Form

570 Expressway Drive South, Suite 2F, Medford, NY 11763
Phone: (631)-727-2400 Fax: (631)-727-2605

- NYS Parks, Recreation, and Historic Preservation Office Letter (dated May 29, 2018)
- New York Natural Heritage Program Letter (dated June 24, 2018)
- Site Photographs
- Location Map
- NYSDEC Article 24 and Article 25 Application Fees ($50 and $200, respectively)

Kindly contact me at (631) 727-2400 or wbowman@landuse.us if you have any questions or require additional information for Department's review of the Town's application for the Argyle Lake culvert replacement project. Thank you.

Very truly yours,

William Bowman, PhD
Senior Scientist

cc. J Figueredo (NV5), via email
R Groh (Town of Babylon), via email

NEW YORK STATE | Department of Environmental Conservation | Office of General Services | Department of State

US Army Corps of Engineers

JOINT APPLICATION FORM

For Permits for activities activities affecting streams, waterways, waterbodies, wetlands, coastal areas, sources of water, and endangered and threatened species.

You must separately apply for and obtain Permits from each involved agency before starting work. Please read all instructions.

1. **Applications To:**

>NYS Department of Environmental Conservation ☑ Check here to confirm you sent this form to NYSDEC.

Check all permits that apply:

- ☑ Stream Disturbance
- ☑ Excavation and Fill in Navigable Waters
- ☐ Docks, Moorings or Platforms
- ☑ Dams and Impoundment Structures
- ☑ 401 Water Quality Certification
- ☑ Freshwater Wetlands
- ☑ Tidal Wetlands
- ☐ Wild, Scenic and Recreational Rivers
- ☐ Coastal Erosion Management
- ☐ Water Withdrawal
- ☐ Long Island Well
- ☐ Incidental Take of Endangered / Threatened Species

>US Army Corps of Engineers ☑ Check here to confirm you sent this form to USACE.

Check all permits that apply: ☑ Section 404 Clean Water Act ☑ Section 10 Rivers and Harbors Act

Is the project Federally funded? ☑ Yes ☐ No

If yes, name of Federal Agency: US Department of Housing and Urban Development -GOSR Project

General Permit Type(s), if known:

Preconstruction Notification: ☐ Yes ☐ No

>NYS Office of General Services ☐ Check here to confirm you sent this form to NYSOGS.

Check all permits that apply:

- ☐ State Owned Lands Under Water
- ☐ Utility Easement (pipelines, conduits, cables, etc.)
- ☐ Docks, Moorings or Platforms

>NYS Department of State ☑ Check here to confirm you sent this form to NYSDOS.

Check if this applies: ☑ Coastal Consistency Concurrence

2. **Name of Applicant**

Town of Babylon (attn: Richard Groh)

Taxpayer ID (if applicant is NOT an individual)

Mailing Address: Department of Coastal and Environmental Management, Room 23, 281 Phelps Lane

Post Office / City: North Babylon | State: NY | Zip: 11703

Telephone: (631) 422-7640 Email: rgroh@townofbabylon.com

Applicant Must be (check all that apply): ☑ Owner ☐ Operator ☐ Lessee

3. **Name of Property Owner (if different than Applicant)**

Village of Babylon

Mailing Address: 153 West Main Street

Post Office / City: Babylon | State: NY | Zip: 11702

Telephone: 631-669-1212 Email:

For Agency Use Only	Agency Application Number:

4. **Name of Contact / Agent**

William Bowman/Land Use Ecological Services, Inc.

Mailing Address	Post Office / City	State	Zip
570 Expressway Drive South, Suite 2F	Medford	NY	11763

Telephone 631-727-2400 Email wbowman@landuse.us

5. **Project / Facility Name** Property Tax Map Section / Block / Lot Number:

Argyle Lake 102-9-3-1

Project Street Address, if applicable	Post Office / City	State	Zip
Argyle Memorial Park, Route 27A	Babylon	NY	11702

Provide directions and distances to roads, intersections, bridges and bodies of water

Project site is located within Argyle Memorial Park at the southern boundary of Argyle Lake. Project will be located approximately 100' north of Montauk Highway (27A), and 700' east of Argyle Avenue.

☐ Town ☑ Village ☐ City

Town/Village	County	Stream/Waterbody Name
Babylon	Suffolk	Argyle Lake

Project Location Coordinates: Enter Latitude and Longitude in degrees, minutes, seconds:

Latitude: 40 ° 41 ' 43.0254 " Longitude: -73 ° 19 ' 44.1078 "

6. **Project Description:** Provide the following information about your project. Continue each response and provide any additional information on other pages. **Attach plans on separate pages.**

a. Purpose of the proposed project:

The Town of Babylon proposes the replacement and up-sizing of an existing 55" x 36" CMP (corrugated metal pipe) arch spillway with a new control gate at the Argyle Lake outfall. The project will provide improvements to upstream and downstream reaches of the Carlls River watershed including lowering flooding elevations upstream of the lake and reducing downstream peak flows during storm events.

b. Description of current site conditions:

The Argyle Lake dam has multiple flow passages at this location including (from west to east) an existing 54" x 36" CMP arch spillway, three existing concrete arch spillways, an existing control gate and culvert, and another 54" x 36" CMP arch spillway. An existing fish ladder is located immediately to the west of these culverts. There are no areas of natural shoreline vegetation present in this portion of Argyle Lake.

c. Proposed site changes:

The 55" x 36" CMP spillway (located to the east) will be removed and replaced with two (2) 36" HDPE (high-density polyethylene) pipe culverts. The existing control gate/culvert (located to the west) shall be retained. A new 16' 2" x 12' 10" reinforced concrete weir box with a 42" x 48" self-contained control gate shall be installed at the upstream side of the new 36" HDPE culverts.

d. Type of structures and fill materials to be installed, and quantity of materials to be used (e.g., square feet of coverage, cubic yards of fill material, structures below ordinary/mean high water, etc.):

Refer to 6c above for dimensions of new concrete weir box. The new weir box shall be placed upon a 12" layer of compacted crushed stone (approximately 7 cubic yards) on geotextile fabric placed below ordinary high water.

e. Area of excavation or dredging, volume of material to be removed, location of dredged material placement:

Excavation will be needed in and surrounding the 200 SF proposed weir box. Sediments removed from this area shall be dewatered and disposed of in an area of existing lawn adjacent to the work area (within 100 ft of the Argyle Lake shoreline). Dewatered sediments will be covered with topsoil and re-seeded with turfgrass.

f. Is tree cutting or clearing proposed? ☑ Yes If Yes, explain below. ☐ No

Timing of the proposed cutting or clearing (month/year): TBD

Number of trees to be cut: 1 Acreage of trees to be cleared:

g. Work methods and type of equipment to be used:

Excavator, crane for installing cofferdam sheeting, and other conventional construction equipment. It is anticipated that the weir box structure will be pre-cast either on-site or at an off-site facility and installed into place.

h. Describe the planned sequence of activities:

1) Construct temporary crush stone path to provide pedestrian access;establish pedestrian detour signage; 2) Install erosion-sediment control practices and turbidity curtain; 3) Clearing, grubbing, site preparation; 4) Cofferdam installation, dewatering, and culvert construction; 5) Site restoration; 6) De-mobilization

i. Pollution control methods and other actions proposed to mitigate environmental impacts:

None necessary nor proposed.

j. Erosion and silt control methods that will be used to prevent water quality impacts:

Silt fencing shall be installed at the toe of the slope to transport of sediments into the tidal reach of the Carlls River. A turbidity curtain shall be installed in the tidal reach of the Carlls River downstream of the project site to prevent downstream movement of turbidity resulting from the proposed construction. A cofferdam shall be installed surrounding upstream work areas and shall serve to minimize potential turbidity.

k. Alternatives considered to avoid regulated areas. If no feasible alternatives exist, explain how the project will minimize impacts:

It is not feasible to avoid regulated areas, as existing infrastructure is within regulated areas. The project minimizes potential impacts by replacing and enhancing an existing culvert, rather than installing a new culvert in a new location.

l. Proposed use: ☐ Private ☑ Public ☐ Commercial

m. Proposed Start Date: Spring 2020 Estimated Completion Date: 3 months later

n. Has work begun on project? ☐ Yes If Yes, explain below. ☑ No

o. Will project occupy Federal, State, or Municipal Land? ☑ Yes If Yes, explain below. ☐ No

Argyle Memorial Park in a Village of Babylon Park

p. List any previous DEC, USACE, OGS or DOS Permit / Application numbers for activities at this location:

Please see attached Previous Permits document.

q. Will this project require additional Federal, State, or Local authorizations, including zoning changes?

☑ Yes If Yes, list below. ☐ No

USACOE, NYSDOS approval is required.

7. **Signatures.**
Applicant and Owner (If different) must sign the application.
Append additional pages of this Signature section if there are multiple Applicants, Owners or Contact/Agents.

I hereby affirm that information provided on this form and all attachments submitted herewith is true to the best of my knowledge and belief.

Permission to Inspect - I hereby consent to Agency inspection of the project site and adjacent property areas. Agency staff may enter the property without notice between 7:00 am and 7:00 pm, Monday - Friday. Inspection may occur without the owner, applicant or agent present. If the property is posted with "keep out" signs or fenced with an unlocked gate, Agency staff may still enter the property. Agency staff may take measurements, analyze site physical characteristics, take soil and vegetation samples, sketch and photograph the site. I understand that failure to give this consent may result in denial of the permit(s) sought by this application.

False statements made herein are punishable as a Class A misdemeanor pursuant to Section 210.45 of the NYS Penal Law. Further, the applicant accepts full responsibility for all damage, direct or indirect, of whatever nature, and by whomever suffered, arising out of the project described herein and agrees to indemnify and save harmless the State from suits, actions, damages and costs of every name and description resulting from said project. In addition, Federal Law, 18 U.S.C., Section 1001 provides for a fine of not more than $10,000 or imprisonment for not more than 5 years, or both where an applicant knowingly and willingly falsifies, conceals, or covers up a material fact; or knowingly makes or uses a false, fictitious or fraudulent statement.

Signature of Applicant

Date: 2/21/19

Applicant Must be (check all that apply): ☐ Owner ☑ Operator ☐ Lessee

Printed Name: Antonio A. Martinez

Title: Deputy Supervisor

Signature of Owner (if different than Applicant)

Date: 02/22/19

Printed Name: RALPH A. SCORDINO, Ralph A. Scordino

Title: Mayor

Signature of Contact / Agent

Date:

Printed Name: William Bowman/Land Use Ecological Services, Inc.

Title: Senior Scientist

For Agency Use Only **DETERMINATION OF NO PERMIT REQUIRED**

Agency Application Number

(Agency Name) has determined that No Permit is required from this Agency for the project described in this application.

Agency Representative:

Printed Name

Title

Signature

Date

617.20
Appendix B
Short Environmental Assessment Form

Instructions for Completing

Part 1 - Project Information. The applicant or project sponsor is responsible for the completion of Part 1. Responses become part of the application for approval or funding, are subject to public review, and may be subject to further verification. Complete Part 1 based on information currently available. If additional research or investigation would be needed to fully respond to any item, please answer as thoroughly as possible based on current information.

Complete all items in Part 1. You may also provide any additional information which you believe will be needed by or useful to the lead agency; attach additional pages as necessary to supplement any item.

Part 1 - Project and Sponsor Information		
Name of Action or Project: Argyle Lake Outfall Culvert Replacement, Up-Sizing, and Installation of New Control Gate		
Project Location (describe, and attach a location map): Argyle Lake Outfall, Babylon Memorial Park, 250 West Main Street, Babylon (SCTM#: 102-9-3-1)		
Brief Description of Proposed Action: Please refer to provided Project Description		
Name of Applicant or Sponsor: Town of Babylon (attn: Richard Groh)	Telephone: 631-422-7640 E-Mail: rgroh@townofbabylon.com	
Address: Department of Coastal and Environmental Management, Room 23, 281 Phelps Lane		
City/PO: North Babylon	State: NY	Zip Code: 11703

	NO	YES
1. Does the proposed action only involve the legislative adoption of a plan, local law, ordinance, administrative rule, or regulation? If Yes, attach a narrative description of the intent of the proposed action and the environmental resources that may be affected in the municipality and proceed to Part 2. If no, continue to question 2.	☑	☐
2. Does the proposed action require a permit, approval or funding from any other governmental Agency? If Yes, list agency(s) name and permit or approval: US Army Corps of Engineers, NYS Department of State	☐	☑

3.a. Total acreage of the site of the proposed action? 0.05 acres
b. Total acreage to be physically disturbed? 0.05 acres
c. Total acreage (project site and any contiguous properties) owned or controlled by the applicant or project sponsor? ~35 acres

4. Check all land uses that occur on, adjoining and near the proposed action.
☐ Urban ☐ Rural (non-agriculture) ☐ Industrial ☑ Commercial ☑ Residential (suburban)
☐ Forest ☐ Agriculture ☑ Aquatic ☐ Other (specify): _____
☑ Parkland

	NO	YES	N/A
5. Is the proposed action,			
a. A permitted use under the zoning regulations?	☐	✓	☐
b. Consistent with the adopted comprehensive plan?	☐	✓	☐

	NO	YES
6. Is the proposed action consistent with the predominant character of the existing built or natural landscape?	☐	✓
7. Is the site of the proposed action located in, or does it adjoin, a state listed Critical Environmental Area? If Yes, identify: As per the NYSDEC EAF Mapper	✓	☐
8. a. Will the proposed action result in a substantial increase in traffic above present levels? 8b and 8c are not applicable to this project	✓	☐
b. Are public transportation service(s) available at or near the site of the proposed action?	✓	☐
c. Are any pedestrian accommodations or bicycle routes available on or near site of the proposed action?	✓	☐
9. Does the proposed action meet or exceed the state energy code requirements? Energy Code is not applicable If the proposed action will exceed requirements, describe design features and technologies:	✓	☐
10. Will the proposed action connect to an existing public/private water supply? Not Applicable If No, describe method for providing potable water:	✓	☐
11. Will the proposed action connect to existing wastewater utilities? Not Applicable If No, describe method for providing wastewater treatment:	✓	☐
12. a. Does the site contain a structure that is listed on either the State or National Register of Historic Places? Argyle Lake Outfall is NR-eligable (USN#: 1034.000329)	☐	✓
b. Is the proposed action located in an archeological sensitive area?	✓	☐
13. a. Does any portion of the site of the proposed action, or lands adjoining the proposed action, contain wetlands or other waterbodies regulated by a federal, state or local agency?	☐	✓
b. Would the proposed action physically alter, or encroach into, any existing wetland or waterbody? If Yes, identify the wetland or waterbody and extent of alterations in square feet or acres: Proposed construction of a new concrete 16' x 12' weir box that shall extend into Argyle Lake.	☐	✓
14. Identify the typical habitat types that occur on, or are likely to be found on the project site. Check all that apply: ☑ Shoreline ☐ Forest ☐ Agricultural/grasslands ☐ Early mid-successional ☐ Wetland ☐ Urban ☑ Suburban		
15. Does the site of the proposed action contain any species of animal, or associated habitats, listed by the State or Federal government as threatened or endangered?	✓	☐
16. Is the project site located in the 100 year flood plain?	☐	✓
17. Will the proposed action create storm water discharge, either from point or non-point sources? If Yes, a. Will storm water discharges flow to adjacent properties? ☐ NO ☐ YES	✓	☐
b. Will storm water discharges be directed to established conveyance systems (runoff and storm drains)? If Yes, briefly describe: ☐ NO ☐ YES		

	NO	YES
18. Does the proposed action include construction or other activities that result in the impoundment of water or other liquids (e.g. retention pond, waste lagoon, dam)? If Yes, explain purpose and size:	✓	
19. Has the site of the proposed action or an adjoining property been the location of an active or closed solid waste management facility? If Yes, describe: As per the NYSDEC EAF Mapper	✓	
20. Has the site of the proposed action or an adjoining property been the subject of remediation (ongoing or completed) for hazardous waste? If Yes, describe: As per the NYSDEC EAF Mapper	✓	

I AFFIRM THAT THE INFORMATION PROVIDED ABOVE IS TRUE AND ACCURATE TO THE BEST OF MY KNOWLEDGE

Applicant/sponsor name: William P. Bowman PhD/Land Use Ecological Services, Inc. Date: 1/20/19

Signature:

Part 2 - Impact Assessment. The Lead Agency is responsible for the completion of Part 2. Answer all of the following questions in Part 2 using the information contained in Part 1 and other materials submitted by the project sponsor or otherwise available to the reviewer. When answering the questions the reviewer should be guided by the concept "Have my responses been reasonable considering the scale and context of the proposed action?"

	No, or small impact may occur	Moderate to large impact may occur
1. Will the proposed action create a material conflict with an adopted land use plan or zoning regulations?		
2. Will the proposed action result in a change in the use or intensity of use of land?		
3. Will the proposed action impair the character or quality of the existing community?		
4. Will the proposed action have an impact on the environmental characteristics that caused the establishment of a Critical Environmental Area (CEA)?		
5. Will the proposed action result in an adverse change in the existing level of traffic or affect existing infrastructure for mass transit, biking or walkway?		
6. Will the proposed action cause an increase in the use of energy and it fails to incorporate reasonably available energy conservation or renewable energy opportunities?		
7. Will the proposed action impact existing: a. public / private water supplies?		
b. public / private wastewater treatment utilities?		
8. Will the proposed action impair the character or quality of important historic, archaeological, architectural or aesthetic resources?		
9. Will the proposed action result in an adverse change to natural resources (e.g., wetlands, waterbodies, groundwater, air quality, flora and fauna)?		

	No, or small impact may occur	Moderate to large impact may occur
10. Will the proposed action result in an increase in the potential for erosion, flooding or drainage problems?	☐	☐
11. Will the proposed action create a hazard to environmental resources or human health?	☐	☐

Part 3 - Determination of significance. The Lead Agency is responsible for the completion of Part 3. For every question in Part 2 that was answered "moderate to large impact may occur", or if there is a need to explain why a particular element of the proposed action may or will not result in a significant adverse environmental impact, please complete Part 3. Part 3 should, in sufficient detail, identify the impact, including any measures or design elements that have been included by the project sponsor to avoid or reduce impacts. Part 3 should also explain how the lead agency determined that the impact may or will not be significant. Each potential impact should be assessed considering its setting, probability of occurring, duration, irreversibility, geographic scope and magnitude. Also consider the potential for short-term, long-term and cumulative impacts.

☐ Check this box if you have determined, based on the information and analysis above, and any supporting documentation, that the proposed action may result in one or more potentially large or significant adverse impacts and an environmental impact statement is required.

☐ Check this box if you have determined, based on the information and analysis above, and any supporting documentation, that the proposed action will not result in any significant adverse environmental impacts.

Name of Lead Agency	Date
Print or Type Name of Responsible Officer in Lead Agency	Title of Responsible Officer
Signature of Responsible Officer in Lead Agency	Signature of Preparer (if different from Responsible Officer)

PRINT

95-20-7 (12/98)

New York State Department of Environmental Conservation
Supplement to Joint Application Form

STRUCTURAL ARCHAEOLOGICAL ASSESSMENT FORM (SAAF)

PART 1 -- APPLICANT COMPLETES

APPLICANT INFORMATION

1.	Applicant Name	Town of Babylon (attn: Richard Groh)
2.	Applicant Address	Department of Coastal and Environmental Management
		Room 23, 281 Phelps Lane, North Babylon, NY 11703

PROJECT INFORMATION

3.	Project/Facility Name	Argyle Lake Outfall Culvert Replacement
4.	Project/Facility Location	Argyle Memorial Park, Argyle Lake Outfall (SCTM 102-9-3-1)

5.	Is the proposed project adjacent to, or does it contain a building or structure listed in the State or National Register of Historic Places?	☐ Yes ☑ No Argyle Lake outfall has been classified as NR-eligable
6.	Are there any buildings or structures 50 years old or older adjacent to or within the proposed project area?	☑ Yes ☐ No

If the answer to question 5 and/or 6 is yes, provide the following information for each building and structure (use attachments if necessary):

a.	Name of structure	Argyle Lake Outfall
b.	Location	Within the Argyle Lake dam, ~100' north of Montauk Highway & ~700' east of Argyle Ave
c.	Type of structure (ex. house, outbuilding, barn, bridge, dam, ruins)	Dam Outfall
d.	Approximate age or date of construction	1920s
7.	Might the proposed project have any impact (physical/visual) upon any buildings or structures listed in the State or National Register of Historic Places **or** 50 years old or older?	☐ Yes ☑ No

If yes, describe briefly (use attachments if necessary):

Refer to attached NYSHPO letter (dated May 25, 2018) indicating no potential impacts. The ornate masonry structures will not be impacted by the project. The culvert that will be modified, as part of the project is located to the east of the masonry structures and ballustrades,

APPLICANT SECTION CONTINUES ON REVERSE SIDE

PART 1 -- APPLICANT COMPLETES

8. Provide photographs of every building and structure that may be impacted by the project as described in number 7, on the opposite side of this page. The following standards are recommended:
   - Minimum of 2 photographs
   - Photographs must be 3.5" x 5" in size or larger
   - Photos must be **clear** and **focused**
   - Digital photographs must be printed on photo paper and be produced at a printer setting of a minimum of 600 dpi
   - Clearly label photos so it is obvious what is being illustrated; key photos to map or plan, if possible
   - Photo 1: show both the entire front and side of the structure in a single shot from as close to the building as possible. Be sure the structure is not partially or fully blocked by trees or other obstructions
   - Photo 2: show relationship of building or structure to roadway or surroundings

9. Has the land within the proposed project area been previously disturbed or altered (excavated, landscaped, filled, utilities installed)?	☑ Yes ☐ No

If yes, describe briefly, including depth of disturbance (use attachments if necessary):

Construction of the Argyle Lake outfall and installation of the ornate masonry arches and ballustrades, pedestrian walkways, landscaping

Footprint and depth of disturbance is similar to the extent and depth of the existing 55" x 36" corrugated metal pipe culvert.

10. Approximate percentage of proposed project area with slopes:	0 - 10%	%
	10 - 15%	%
	15% or greater	100 %
11. Approximate percentage of proposed project site with the following drainage characteristics: Site consists of Riverhead Haven complex soils, which are well-drained as per USDA-NRCS Web Soil Survey.	Well drained	100 %
	Moderately well drained	%
	Poorly drained	%

Prepared By (Print or type name): William Bowman, Land Use Ecological Services, Inc.

Signature: Date: 1/20/2019

PART 2 -- DEPARTMENT OF ENVIRONMENTAL CONSERVATION (DEC) COMPLETES

APPLICANT/PROJECT INFORMATION		
1.	Applicant Name	
2.	Project/Facility Name	
3.	DEC Number	- - / -

BUILDINGS AND STRUCTURES		
4.	Might the proposed project have any impact (physical/visual) upon any buildings or structures listed in the State or National Register of Historic Places **or** 50 years old or older?	☐ Yes ☐ No
	If yes, DEC must consult with the Office of Parks, Recreation and Historic Preservation (OPRHP). DEC must request a determination of eligibility for the State Register of Historic Places and/or comments regarding project impact. Include information supplied by the applicant in response to questions 5, 6, 7 and 8 of **Part 1** of this form.	

ARCHAEOLOGICAL SITES		
5.	Does the proposed project area coincide with a circle, square or stippled area on OPRHP's Statewide Archaeological Inventory Map?	☐ Yes ☐ No
6.	Is the proposed project area outside of a circle or square, but one for which information has been provided (ex: documented reports of known sites) that suggests the area is archaeologically sensitive?	☐ Yes ☐ No
	If yes, what is the nature and source of information?	
7.	Is the proposed project area apparently undisturbed?	☐ Yes ☐ No
8.	Will the proposed action include a physical disturbance of the project area?	☐ Yes ☐ No
9.	Is the slope in the area characteristically less than 15% (unless on limestone/flint escarpments)?	☐ Yes ☐ No
10.	Is the proposed project area characteristically moderately well or well drained?	☐ Yes ☐ No
	If the answers to 5, 7-10 are yes, an archeological survey should be performed by the applicant. Provide the applicant with a copy of or the link to the *State Historic Preservation Office Phase 1 Archaeological Report Format Requirements (08/05).*	
	If the answer to 5 is no, but answers to 6-10 are yes, DEC must consult with OPRHP before requiring that the applicant perform an archaeological survey.	

DEC SECTION CONTINUES ON REVERSE SIDE

PART 2 -- DEPARTMENT OF ENVIRONMENTAL CONSERVATION (DEC) COMPLETES		
RESULTS OF EVALUATION		
☐ **SHPA-1**	No buildings, structures or archaeological sites identified at the project location.	
☐ **SHPA-2**	Buildings, structures or archaeological sites identified, but no impacts will occur, no survey required. No further cultural resources review required.	
☐	Consultation by DEC with OPRHP required.	☐ Structures ☐ Archaeology
☐	Archaeological survey required.	
Prepared by:		Date:

(03/2009 - Technical details updated)

NEW YORK STATE OF OPPORTUNITY. | Parks, Recreation, and Historic Preservation

Resource Evaluation

Date: 12/22/2014

Staff: Lorraine Weiss

USN Number: 10344.000329

Name: Argyle Lake Dam

Location: 250 W. Main St., Babylon NY 11702

Resource Status:

1. **Determination:** Eligible
2. **Contributing:**

Criteria for Inclusion in the National Register:

A. [ ] Associated with events that have made a significant contribution to the broad patterns in our history.

B. [ ] Associated with the lives of persons significant in our past.

C. [X] Embodies the distinctive characteristics of a type, period or method of construction; or represents the work of a master; or posses high artistic values; or represents a significant and distinguishable entity whose components may lack individual distinction.

D. [ ] Have yielded, or may be likely to yield information important in prehistory or history.

Summary Statement:

The Argyle Lake Dam is located at the southern end of Argyle Lake and was incorporated into the Babylon Memorial Park after 1922. Walkways and barriers around the three outlet points were constructed in a Beaux Arts style with rusticated masonry arches over the outlets, low rusticated masonry walls topped with ballustrades, and several urn-topped pedestals. The dam is a focal point of the overall landscape design of the park.
The following information provided by Mary Cascone, Town Historian:
The "dam" is commonly referred to as the Argyle Lake Overflow. The earliest photographs and postcards show wooden structures at the overflow. The ornate concrete structure that we see today was probably built in the 1920s.
The earliest use of the overflow, as far as I know, was a paper mill operated by Isaac Willets, described in Benjamin P. Field's 1911"Reminiscences of Babylon,":

"In those days, the clanging of machinery and the music of the
paper mill wheels, could be heard both day and night with ceaseless hum, until the clock announced the advent of Sunday morning. The old mill has been taken away, and strangers now passing the place and stopping, perhaps to admire the cascade overflowing from the beautiful "Argyle" lake, would not dream that this quiet little spot was once the scene of such busy activity…"

Field did not provide specific dates, but it is likely that the Willets mill
would have been before 1882.
Prior to the name Argyle Lake, it was known as Blythbourne Lake (as found on a 1873 map). The Argyle Hotel was built in 1882, but a 1888 map still refers to the lake as Blythbourne. The hotel closed in 1897 and was demolished in 1904. Maps from 1902 and 1915 identify the lake as Argyle.
The lake property was acquired by J. Stanley Foster in the early 1900s. In 1922, Foster gifted the lake property to the village of Babylon, specifically for public park use and as a memorial to World War I veterans. Although it is commonly known as Argyle Park, it was officially named Babylon Memorial Park.

NEW YORK STATE OF OPPORTUNITY. | **Parks, Recreation, and Historic Preservation**

ANDREW M. CUOMO
Governor

ROSE HARVEY
Commissioner

May 29, 2018

Ms. Jessica Enzmann
Environmental GIS Analyst
Town of Babylon
200 E. Sunrise Highway
Lindenhurst, NY 11757

Re: DEC
Stormwater Infrastructure Improvements - Carlls River Wetland
151 Phelps Lane, Town of Babylon, Suffolk County, NY
14PR02659

Thank you for requesting the comments of the Division for Historic Preservation of the Office of Parks, Recreation and Historic Preservation (OPRHP). We have reviewed the request for an updated OPRHP sign off letter in accordance with the New York State Historic Preservation Act of 1980 (section 14.09 of the New York Parks, Recreation and Historic Preservation Law). These comments are those of the Division for Historic Preservation and relate only to Historic/Cultural resources. They do not include potential environmental impacts to New York State Parkland that may be involved in or near your project. Such impacts must be considered as part of the environmental review of the project pursuant to the State Environmental Quality Review Act (New York Environmental Conservation Law Article 8) and its implementing regulations (6NYCRR Part 617).

Based upon this review, it is the OPRHP's opinion that your project will continue to have No Impact upon cultural resources in or eligible for inclusion in the State and National Register of Historic Places.

If you have any questions, I can be reached at (518) 268-2179.

Sincerely,

Nancy Herter

Nancy Herter
Archaeology Unit Program Coordinator

1 Project Purpose and Existing Conditions

The Town of Babylon proposes the replacement and up-sizing of an existing 55" x 36" CMP (corrugated metal pipe) arch spillway with a new control gate at the Argyle Lake outfall in Babylon Memorial Park (Village of Babylon). The project will provide important hydraulic improvements to upstream and downstream reaches of the Carlls River watershed including lowering flooding elevations upstream of the lake and reducing downstream peak flows during storm events.

The Argyle Lake dam has multiple flow passages at this location including (from west to east) an existing 54" x 36" CMP arch spillway, three existing concrete arch spillways that discharge to a series of tiered plunge pools, an existing control gate and culvert, and another 54" x 36" CMP arch spillway. An existing Denil-style fish ladder located immediately to the west of the aforementioned culverts provides passage for anadromous fish across the dam. The Argyle Lake outfall is a National Register-eligible historical resource; the dam and spillways are a focal point of the landscape design in this heavily used (and highly visible) portion of the park. Due to the extensive landscaping and constructed elements, there are no areas of natural shoreline vegetation in the vicinity of the proposed culvert replacement.

2 Proposed Project

The two easternmost flow passages at the Argyle Lake outfall consist of a control gate/culvert and a 55" x 36" CMP (corrugated metal pipe) arch spillway. The 55" x 36" CMP spillway (located to the east) will be removed and replaced with a new 48" x 48" sluice connect to a new spillway wall and two (2) 36" HDPE (high-density polyethylene) pipe culverts. The existing control gate/culvert (located to the west) shall be retained. A new 16' 2" x 12' 10" reinforced concrete weir box for the 48" x 48" self-contained control gate shall be installed at the upstream side of the new 36" HDPE culverts. The new weir box shall be placed upon a 12" layer of compacted crushed stone (approximately 7 cubic yards) on geotextile fabric. The new weir box shall extend approximately 6 feet Argyle Lake. However, the weir box shall be located within the footprint of an existing hardened apron located at the upstream end of the existing 55" x 36" CMP culvert.

There will be no improvements to the (3) existing concrete arch spillways, the existing control gate, the existing western 54"x36" CMP arch spillway, or the existing fish passage as part of this project.

A temporary sheetpile cofferdam shall be installed upstream of the work area, so that construction may be completed in the dry. The cofferdam shall comply with NYSDOT specifications. A mudsucker pump may be used for the necessary dewatering. However, if well points are required or selected by the contractor for dewatering, The use of temporary well points will require a Long Island Well permit for temporary dewatering; this shall be obtained by the construction or dewatering contractor. The Long Island Well permit cannot be applied for/obtained at this time; as the means and methods (i.e. number and depth of well points, number and capacity of pumps, maximum and daily pump rates) are not known at this time.

Sediments removed from the nearshore areas of Argyle Lake and upland soils will be temporarily stored, dewatered, and then disposed of within the "dredging disposal area" shown on the site plans. The dredged sediments will be covered with topsoil and seeded with turf grass seed.

There are no areas of vegetated wetlands along the Argyle Lake shorelines in the project construction area; accordingly, no areas of natural vegetation will be adversely impacted by the proposed project. After completion of construction, the disturbed areas of turfgrass will be restored via topsoil placement and turf grass seeding.

3 Operation Under Proposed Conditions

The weir wall within the proposed weir box shall be set to the same height as the existing overflow pipe culvert that is being replaced. Furthermore, the Argyle Lake dam consists of multiple spillways with the elevations of all of the spillway being within 0.28' (maximum), accordingly, the spillways were analyzed as a single spillway in the Dam Design Report. Under the proposed conditions, the elevations of the multiple spillways will remain equivalent.

The water level in Argyle Lake shall be maintained to the existing level, except when the gate is open. The proposed gate is to be operated in the same manner as the existing gate; gates will be opened prior to large storm events to preemptively lower the Argyle Lake water elevation (by 2 feet according to Dam Design Report and appendices) and provide additional storage capacity for stormwater within the lake. At all other times, the gate shall be operated normally and water levels maintained at the present levels.

The lake elevation and flow rate through the existing Denil-style fish ladder will also be maintained. The only time flow rate will be altered shall be when the existing and/or proposed control gates are opened and the lake lowered (up to 2 feet), prior to storm events. During this time, when either control gate is opened, the fish ladder will not be usable. The gate will then be closed after floodwaters have dissipated allowing the lake to return to normal water levels.

4 Environmental Mitigation

Silt fencing shall be installed at the downstream at the toe of the slope to prevent erosion of disturbed sediments into the tidal reach of the Carlls River. A turbidity curtain shall be installed in the tidal reach of the Carlls River downstream of the project site to prevent downstream movement of turbidity resulting from the proposed construction. A cofferdam shall be installed surrounding upstream work areas and shall serve to minimize potential turbidity impacts in Argyle Lake. Many reaches of the Carlls River provide trout spawning habitat. Accordingly, the site plans indicate that any construction activities that may increase turbidity or occur within stream between October 1 and March 31.

5 Construction Sequence

Construct temporary crush stone path on existing turfgrass to provide pedestrian access around construction area. Close existing pedestrian path and install pedestrian detour signage. Followed by installation of erosion and sediment control practices, including silt fencing and turbidity curtain. Next clearing and grubbing of construction area and preparation of site for equipment and material staging. Next cofferdam installation and culvert construction will occur. The new culvert and control gate shall then be constructed and the cofferdam removed. Lastly, the sidewalk shall be repaired and the construction area restored through topsoil placement and re-seeding with turfgrass. After site restoration, erosion and sediment control practices (silt fence and turbidity curtain) shall be removed.

Land Use Ecological Services, Inc

Previous Permits

Town of Babylon
Carll's River System
Governor's Office of Storm Recovery Projects

Site 5: Argyle Lake

Previous NYSDEC applications at Argyle Park as per DART search

Permit ID	Issue Date	Expiration Date
1-4720-00863/00001	Withdrawn 6/12/1995	N/A
1-4720-00863/00002	12/22/1997	12/31/2002
1-4720-00863/00003	7/25/2001	7/25/2011
1-4720-00863/00004	7/25/2001	7/25/2011
1-4720-00863/00005	7/25/2001	7/25/2011
1-4720-00863/00006	1/23/2002	1/31/2007
1-4720-00863/00007	1/23/2002	1/31/2007
1-4720-00863/00008	1/23/2002	1/31/2007
1-4720-00863/00009	9/25/2007	9/24/2017
1-4720-00863/00010	9/10/2009	9/9/2014
1-4720-00863/00011	9/10/2009	9/9/2014
1-4720-00863/00012	9/10/2009	9/9/2014
1-4720-00863/00013	9/10/2009	9/9/2014
1-4720-00863/00014	10/15/2009	10/14/2014
1-4720-00863/00014	Reissued 5/3/2016	10/14/2019
1-4720-00863/00015	10/15/2009	10/14/2014
1-4720-00863/00015	Reissued 5/3/2016	10/14/2019
1-4720-00863/00016	10/15/2009	10/14/2014
1-4720-00863/00017	10/15/2009	10/14/2014
1-4720-00863/00017	Reissued 5/3/2016	10/14/2019
1-4720-00863/00018	2/23/2012	2/22/2017
1-4720-00863/00019	2/23/2012	2/22/2017
1-4720-00863/00020	2/23/2012	2/22/2017
1-4720-00863/00021	2/23/2012	2/22/2017
1-4720-00863/00020	2/23/2012	2/22/2017
1-4720-00863/00027	7/30/2018	7/29/2023

570 Expressway Drive South, Suite 2F • Medford, New York • 11763
631-727-2400 • Fax 631-727-2605

SITE PHOTOS 1 & 2:
Argyle Lake
Babylon, NY 11702

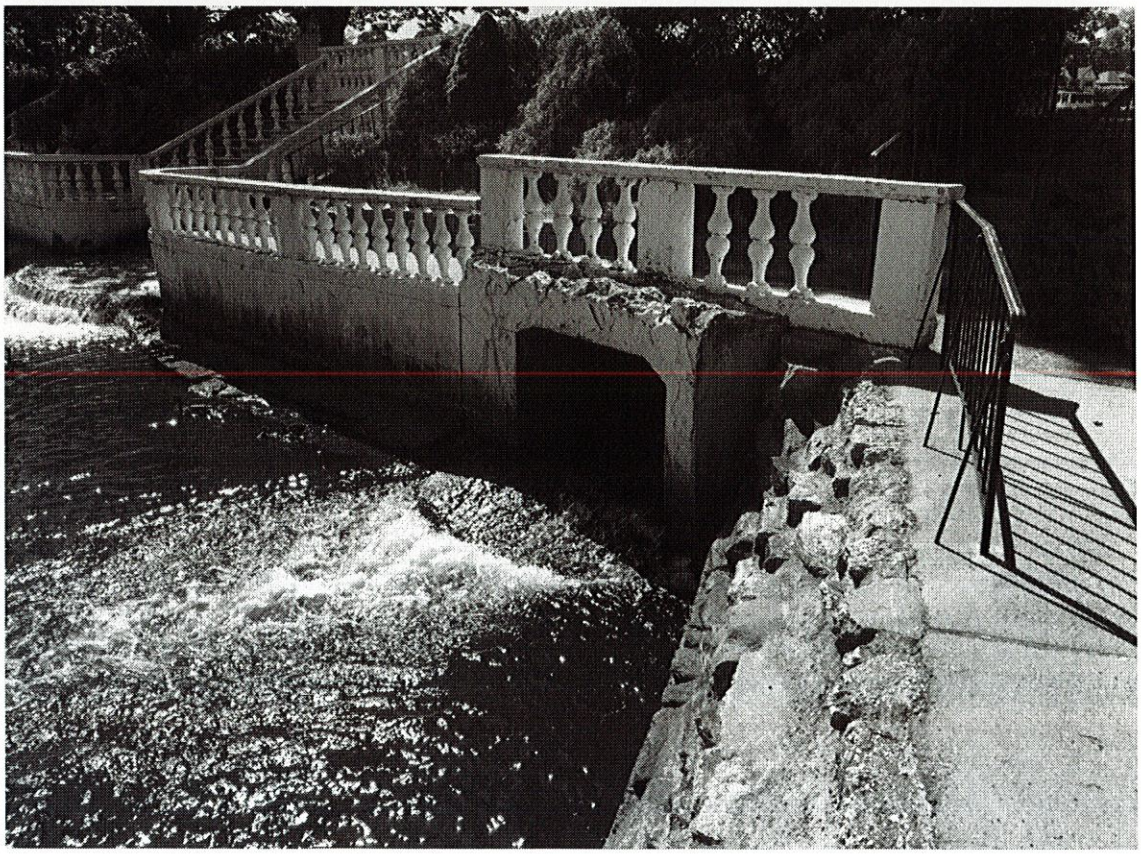

NOTES: 1. Photo 1 (top): Existing upstream gate to remain. Looking east. Photo taken 5/30/2018.
2. Photo 2 (bottom): Existing downstream outfall from gate in Photo 1. Looking northwest. Photo taken on 5/30/2018.

SITE PHOTOS 3 & 4:
Argyle Lake
Babylon, NY 11702

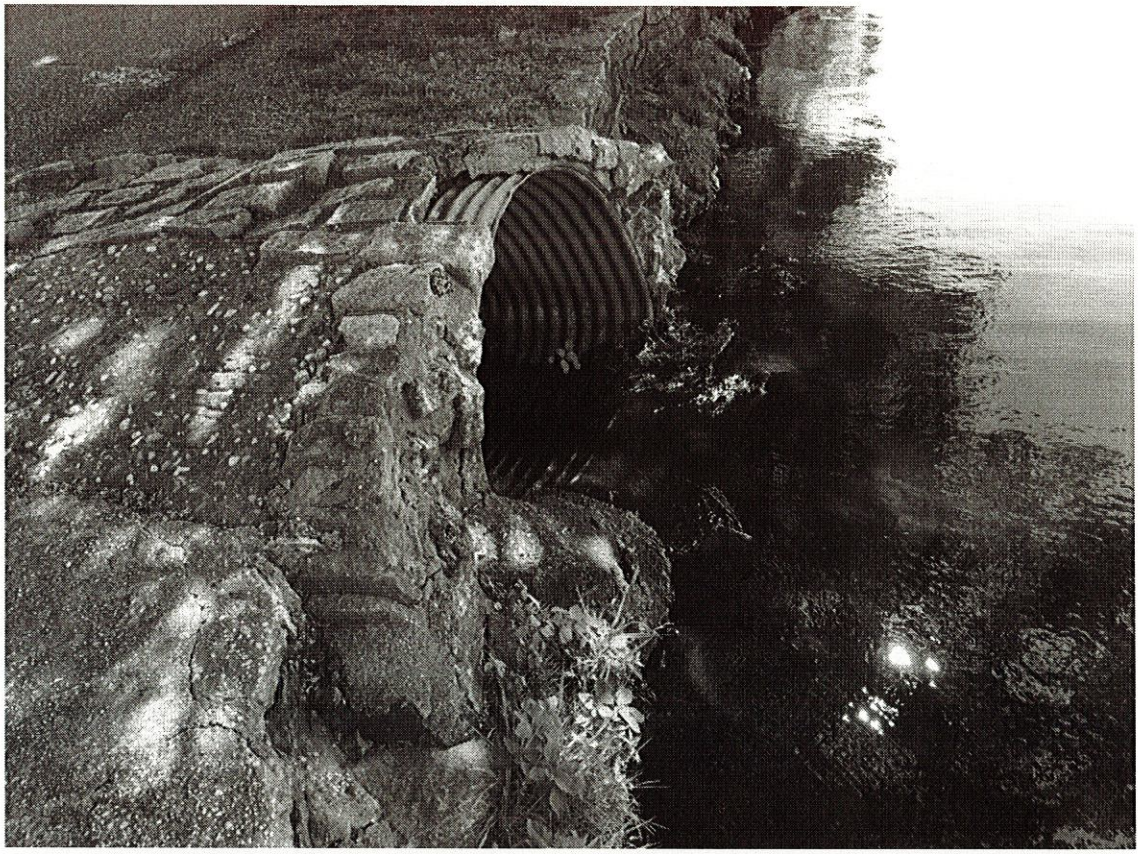

NOTES: 1. Photo 3 (top): Existing upstream culvert to be replaced on Argyle Lake. Looking west. Photo taken on 5/30/2018.
2. Photo 4 (bottom): Existing upstream culvert to be replaced . Looking east. Photo taken on 5/30/2018.

SITE PHOTOS 5 & 6:
Argyle Lake
Babylon, NY 11702

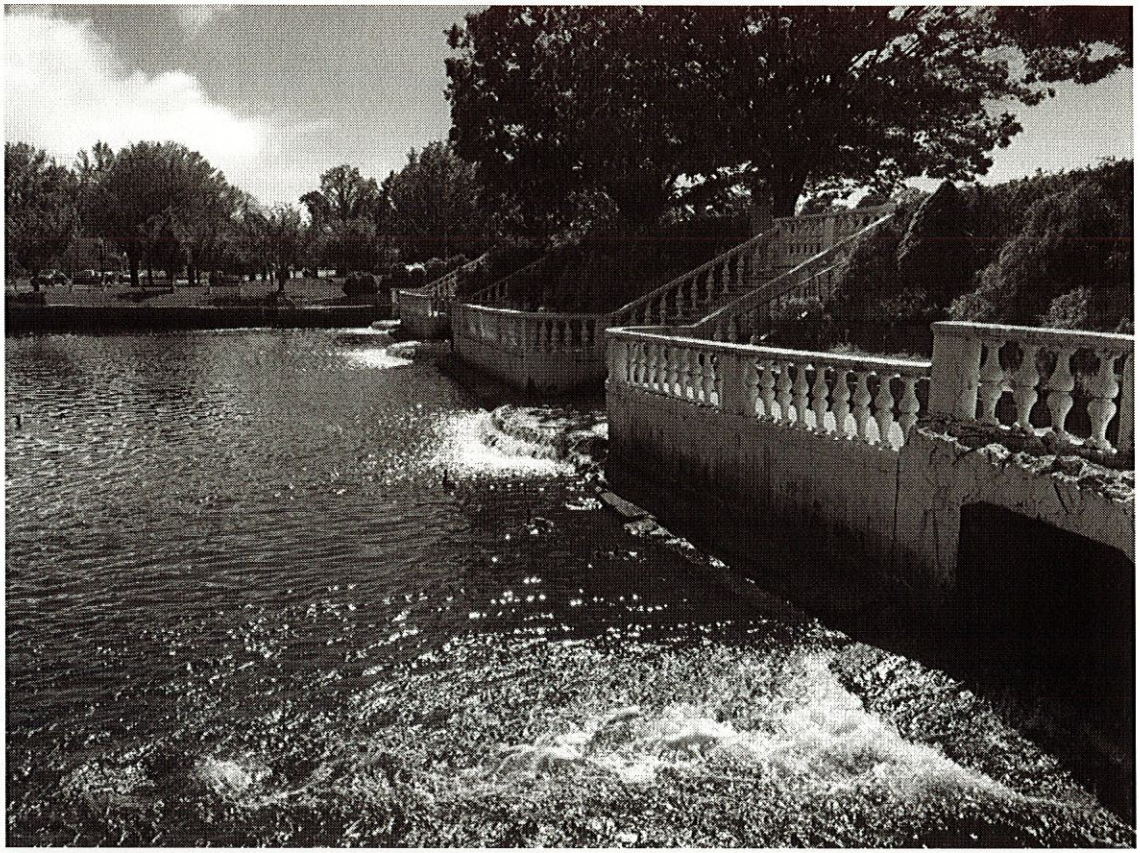

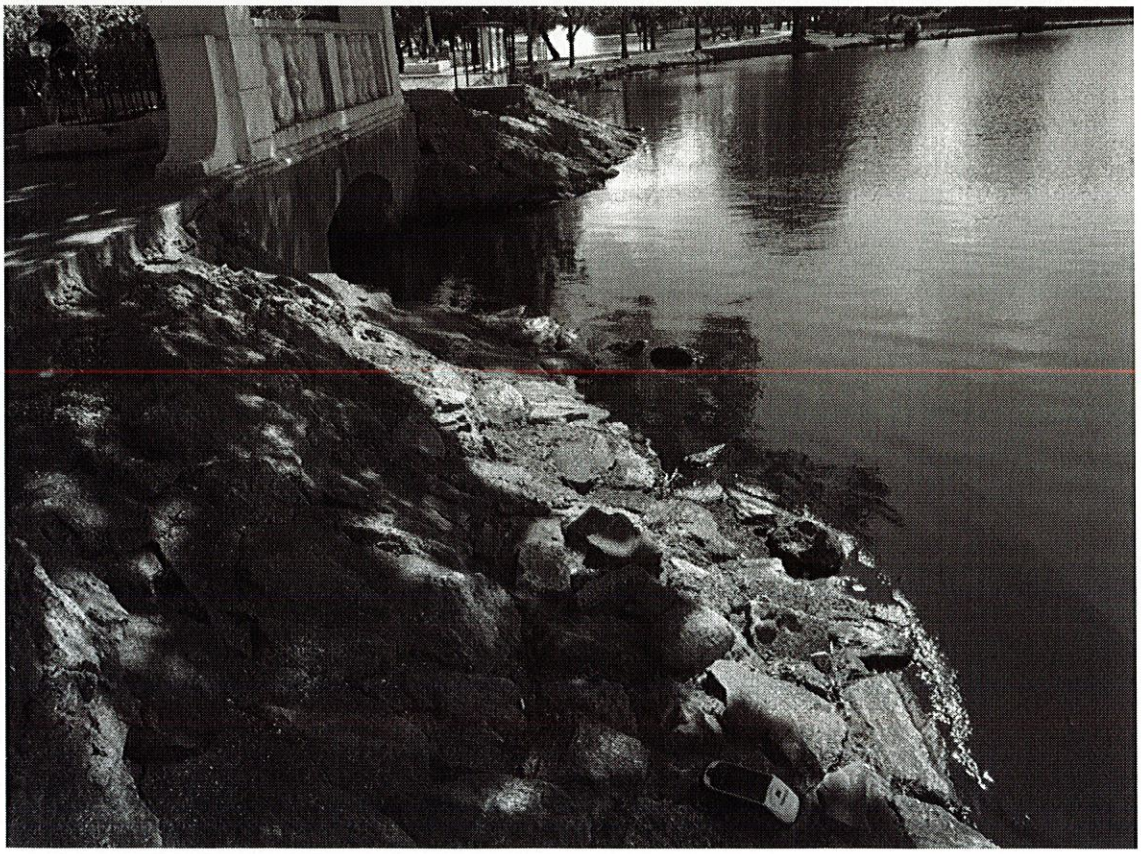

NOTES: 1. Photo 5 (top): Existing downstream outfalls. Looking west. Photo taken 5/30/2018.
2. Photo 6 (bottom): Existing upstream culvert on Argyle Lake. Looking west. Photo taken 5/30/2018.

SITE PHOTOS 7 & 8:
Argyle Lake
Babylon, NY 11702

NOTES: 1. Photo 7 (top): Existing upstream culvert. Looking east. Photo taken 5/30/2018.
2. Photo 8 (bottom): Downstream outfall of existing gates and culverts. Looking northwest. Photo taken 5/30/2018.

Argyle Lake

Argyle Lake, Babylon, NY 11702 | SCTM #

N

Land Use Ecological Services, Inc.
570 Expressway Drive South, Suite 2F
Medford, NY 11763
Tel. 631-727-2400 Fax.631-727-2605

Location map taken from Google Maps (www.google.com).
Latitude 40° 41' 43.0254" N Longitude 73° 19' 44.1078" W

★ = Project Site

NEW YORK STATE DEPARTMENT OF ENVIRONMENTAL CONSERVATION

Division of Fish and Wildlife, New York Natural Heritage Program
625 Broadway, Fifth Floor, Albany, NY 12233-4757
P: (518) 402-8935 | F: (518) 402-8925
www.dec.ny.gov

June 24, 2018

William Bowman
Land Use Ecological Services, Inc.
570 Expressway Drive South, Suite 2F
Medford, NY 11763

Re: Carlls River Watershed Infrastructure Improvements
County: Suffolk Town/City: Babylon

Dear Mr. Bowman:

In response to your recent request, we have reviewed the New York Natural Heritage Program database with respect to the above project.

☐

Enclosed is a report of rare or state-listed animals and plants, and significant natural communities that our database indicates occur at the project site, or in its vicinity.

For most sites, comprehensive field surveys have not been conducted; the enclosed report only includes records from our database. We cannot provide a definitive statement as to the presence or absence of all rare or state-listed species or significant natural communities. Depending on the nature of the project and the conditions at the project site, further information from on-site surveys or other sources may be required to fully assess impacts on biological resources.

Our database is continually growing as records are added and updated. If this proposed project is still under development one year from now, we recommend that you contact us again so that we may update this response with the most current information.

☐

The presence of the plants and animals identified in the enclosed report may result in this project requiring additional review or permit conditions. For further guidance, and for information regarding other permits that may be required under state law for regulated areas or activities (e.g., regulated wetlands), please contact the NYS DEC Region 1 Office, Division of Environmental Permits, as listed at www.dec.ny.gov/about/39381.html.

Sincerely,

Andrea Chaloux

Andrea Chaloux
Environmental Review Specialist
New York Natural Heritage Program

691

The following rare plants, rare animals, and significant natural communities have been documented at the project site, or in its vicinity.

We recommend that potential impacts of the proposed project on these species or communities be addressed as part of any environmental assessment or review conducted as part of the planning, permitting and approval process, such as reviews conducted under SEQR. Field surveys of the project site may be necessary to determine the status of a species at the site, particularly for sites that are currently undeveloped and may still contain suitable habitat. Final requirements of the project to avoid, minimize, or mitigate potential impacts are determined by the lead permitting agency or the government body approving the project.

The following animal, while not listed by New York State as Endangered or Threatened, is of conservation concern to the state, and is considered rare by the New York Natural Heritage Program.

COMMON NAME	*SCIENTIFIC NAME*	*NY STATE LISTING*	*HERITAGE CONSERVATION STATUS*
Birds			
Prothonotary Warbler *Breeding*	*Protonotaria citrea*	Protected Bird	Imperiled in NYS

Belmont, at or very near the project sites at Elda Lake, Sunrise Highway, and Southards Pond, and within 0.5 mile of the project sites at Locust Avenue and Argyle Lake, 2000-05: The birds were found at a riparian stream edge in a red maple-blackgum swamp. The understory vegetation includes sweet pepperbush and cinammon fern. 7785

The following natural community is considered significant from a statewide perspective by the NY Natural Heritage Program. It is either an example of a community type that is rare in the state, or a high-quality example of a more common community type. By meeting specific, documented criteria, the NY Natural Heritage Program considers this community occurrence to have high ecological and conservation value.

COMMON NAME	*SCIENTIFIC NAME*	*NY STATE LISTING*	*HERITAGE CONSERVATION STATUS*
Wetland/Aquatic Communities			
Red Maple-Blackgum Swamp			High-quality Occurrence of Rare Community Type

Belmont Lake, at or very near the project sites at Elda Lake, Sunrise Highway, and Southards Pond, and within 0.5 mile of the project sites at Locust Avenue and Argyle Lake: A forested swamp of large size with surprisingly few exotic species, located within a landscape that is surrounded by heavy development. Several bridges and culverts have been placed across the stream that flows through the swamp. 8164

The following plant is listed as Endangered by New York State, and is considered rare by the New York Natural Heritage Program, and so is a vulnerable natural resource of conservation concern.

COMMON NAME	*SCIENTIFIC NAME*	*NY STATE LISTING*	*HERITAGE CONSERVATION STATUS*
Vascular Plants			
Sweetbay Magnolia	*Magnolia virginiana var. virginiana*	Endangered	Critically Imperiled in NYS

Belmont Lake South, within 0.5 mile of the project sites at Elda Lake and Sunrise Highway, 2001-06-28: These trees are located within a red maple hardwood swamp on state park property that is surrounded by intense residential development. A narrow stream flows through the wooded sections of the state park. At the point where this stream divides and begins to expand into a large wooded swamp, the magnolia trees begin to appear. Some of the trees are located directly along the edge of a dirt trail. The trees are often multi-trunked and located on super-saturated soil. In most locations, the soil is firm and walkable. The area also seems like it may provide potential habitat for *Populus heterophylla*. 3770

This report only includes records from the NY Natural Heritage database. For most sites, comprehensive field surveys have not been conducted, and we cannot provide a definitive statement as to the presence or absence of all rare or state-listed species. Depending on the nature of the project and the conditions at the project site, further information from on-site surveys or other sources may be required to fully assess impacts on biological resources.

If any rare plants or animals are documented during site visits, we request that information on the observations be provided to the New York Natural Heritage Program so that we may update our database.

Information about many of the rare animals and plants in New York, including habitat, biology, identification, conservation, and management, are available online in Natural Heritage's Conservation Guides at www.guides.nynhp.org, from NatureServe Explorer at www.natureserve.org/explorer, and from USDA's Plants Database at http://plants.usda.gov/index.html (for plants).

Information about many of the natural community types in New York, including identification, dominant and characteristic vegetation, distribution, conservation, and management, is available online in Natural Heritage's Conservation Guides at www.guides.nynhp.org. For descriptions of all community types, go to www.dec.ny.gov/animals/97703.html for Ecological Communities of New York State.

NEW YORK STATE OF OPPORTUNITY. | Department of Environmental Conservation

PERMISSION TO INSPECT PROPERTY

By signing this permission form for submission with an application for a permit(s) to the Department of Environmental Conservation ("DEC"), the signer consents to inspection by DEC staff of the project site or facility for which a permit is sought and, to the extent necessary, areas adjacent to the project site or facility. This consent allows DEC staff to enter upon and pass through such property in order to inspect the project site or facility, without prior notice, between the hours of 7:00 a.m. and 7:00 p.m., Monday through Friday. If DEC staff should wish to conduct an inspection at any other times, DEC staff will so notify the applicant and will obtain a separate consent for such an inspection.

Inspections may take place as part of the application review prior to a decision to grant or deny the permit(s) sought. By signing this consent form, the signer agrees that this consent remains in effect as long as the application is pending, and is effective regardless of whether the signer, applicant or an agent is present at the time of the inspection. In the event that the project site or facility is posted with any form of "posted" or "keep out" notices, or fenced in with an unlocked gate, this permission authorizes DEC staff to disregard such notices or unlocked gates at the time of inspection.

The signer further agrees that during an inspection, DEC staff may, among other things, take measurements, may analyze physical characteristics of the site including, but not limited to, soils and vegetation (taking samples for analysis), and may make drawings and take photographs.

Failure to grant consent for an inspection is grounds for, and may result in, denial of the permit(s) sought by the application.

Permission is granted for inspection of property located at the following address(es):

Village of Babylon Argyle Park
0102-009.00-03.00-001.000

*By signing this form, I affirm under penalty of perjury that I am authorized to give consent to entry by DEC staff as described above. I understand that false statements made herein are punishable as a Class A misdemeanor pursuant to Section 210.45 of the Penal Law.**

Ralph A. Scordino	Ralph A Scordino	02/22/19
Print Name and Title	Signature	Date

*The signer of this form must be an individual or authorized representative of a legal entity that:

- owns fee title and is in possession of the property identified above;
- maintains possessory interest in the property through a lease, rental agreement or other legally binding agreement; or
- is provided permission to act on behalf of an individual or legal entity possessing fee title or other possessory interest in the property for the purpose of consenting to inspection of such property.

NEW YORK STATE OF OPPORTUNITY.

Department of Environmental Conservation

APPLICATION FOR PERMIT

FOR THE CONSTRUCTION, RECONSTRUCTION OR REPAIR OF A DAM OR OTHER IMPOUNDMENT STRUCTURE

Supplement D-1

Please read all instructions on the following page. Please TYPE or PRINT clearly in ink. Attach additional information as needed.

FOR DEPARTMENT USE ONLY
APPLICATION NO.
DAM NO.
WATERSHED

PROJECT DESCRIPTION

1. LOCATION On U.S. GEOLOGICAL SURVEY MAP
   Name of Map: BayShoreW | Latitude: 40.695 | Longitude: -73.329

2. PROPOSED USE FOR IMPOUNDED WATER: Recreation

3. STATE THE HEIGHT ABOVE SPILLCREST OF THE LOWEST PART OF THE IMMEDIATE UPSTREAM ADJOINING PROPERTY OR PROPERTIES: 1.43 Feet

4. IS THIS PROPOSED POND OR LAKE PART OF A PUBLIC WATER SUPPLY ☐ Yes ☑ No
   If not, where is nearest downstream public water supply intake?

5. SIZE OF AREA DRAINING INTO POND OR LAKE (Acres or Square Miles): 15,000 Acres

HEIGHT OF DAM ABOVE STREAM BED? 8.11 Feet

6. THE DRAINAGE AREA IS COMPOSED OF: (Total = 100%)
   10 % Forest, .5 % Cropland, .5 % Pasture, 33 % Other, 2 % Swamp, 50 % Suburban Lands, 4 % Urban Lands

7. TYPE OF SPILLWAY
   ☐ Service Spillway - Auxiliary Spillway Combination
   ☐ Pip Riser ONLY
   ☑ Single Spillway
   ☐ Other

8. DESIGNER'S ESTIMATE OF CLASS OF HAZARD (As described in 6NYCRR Part 673)
   ☑ Class "A" ☐ Class "B" ☐ Class "C"
   NOTE: Provide descriptive information on character of downstream area.

9a. SPILLWAY INFLOW DESIGN FLOOD
   Frequency 100 Flood Peak 5764 cfs Runoff Volume 3.56 in.

9b. SERVICE SPILLWAY INFLOW DESIGN FLOOD
   Frequency 5 Flood Peak 1205 cfs Runoff Volume 1.28 in.

10. THE SINGLE SPILLWAY OR AUXILIIARY SPILLWAY IS COMPOSED OF:
   ☐ Vegetated Earth ☑ Concrete ☐ Timber ☐ Rock-filled Crib ☐ Masonry ☐ Other

11. MAXIMUM VELOCITY WITHIN THE SINGLE OR AUXILIARY SPILLWAY: 7.35 fps

12. SINGLE OR AUXILIARY SPILLWAY DISCHARGE AT DESIGN HIGH WATER: 170.92 cfs

13. TYPE OF ENERGY DISSIPATER PROVIDED ON SINGLE SPILLWAY
   ☐ Hydraulic Jump Basin ☐ Drop Structure ☑ Other Plunge Pool

14. POND OR LAKE WILL BE DRAINED BY MEANS OF

WATER WILL BE SUPPLIED TO RIPARIAN OWNERS DOWNSTREMA BY MEANS OF

15. AREA CAPACITY DATA
   Answer 1, 2 and 3, OR 1, 2, 4, 5

	ELEVATION, Referred to Assumed Benchmark	SURFACE AREA	VOLUME STORED
1. Top of Dam	9.17 Feet	63 Acres	263 Acre-Feet
2. Design High Water	8.44 Feet	54 Acres	219 Acre-Feet
3. Single Spillway Crest	4.87 Feet	26.50 Acres	91.60 Acre-Feet
4. Auxiliary Spillway Crest	Feet	Acres	Acre-Feet
5. Service Spillway Crest	Feet	Acres	9.17 Acre-Feet

16. TYPE OF ENERGY DISSIPATER AT OUTLET OF CONDUIT:
   ☐ Impact Basin ☐ Hydraulic Jump Basin
   ☑ Plunge Pool ☐ Other

IS RISER PROVIDED WITH AN ANTI-VORTEX DEVICE?
   ☐ Yes ☐ No

17. DRAWDOWN TIMES: Answer 1 and 2, OR 1, 3, and 4

	Yes	No
1. Has provision been made to evacuate 90% of the storage below the lowest spillway crest within fourteen days?	☑	☐
2. Can the single spillway evacuate 75% of the storage between the maximum design high water and the spillway crest within 48 hours?	☑	☐
3. Can the Service Spillway evauate 75% of the storage between the auxiliary spillway and the Service Spillway crest within seven days?	☑	☐
4. Can the Service Spillway and the Auxiliary Spillway in combination evacuate the storage between the design high water and the auxiliary spillway crest within 12 hours?	☐	☐

18. SOIL DATA - State the character of the bed and banks in respect to natural types of soil materials, hardness, perviousness, water bearing, effect of exposure to air and water, uniformity, etc.

See attached Design Report.

If an earth dam, describe the material to be used in the embankment.

See attached Design Report.

What is the source of embankment fill material?

See attached Design Report.

Are there porous seams or fissures beneath the foundation of the proposed dam? ☐ Yes ☑ No

Method used to obtain the above soil data
   ☐ Soil Bearing ☑ Test Pits

19. DESIGN ENGINEER Name of agency or individual	P.E. License No. of Individual	20. CONSTRUCTION ENGINEER Name of agency or individual	P.E. License No. of Individual
Robert Steele	077397-1	Steve Normandin	077934
Address: 437 South Country Road, Brookhaven, NY		Address: 40 Marcus Drive, Suite 201 Melville	
Title: Executive VP	Telephone No.: 631-286-8668	Title: Managing Director	Telephone No.: 631-891-3202

TOWN OF BABYLON
SUFFOLK COUNTY, NEW YORK

CARLLS RIVER WATERSHED PROJECT
SUNRISE HIGHWAY - LOCATION #1
MAY 2019

LOCATION #1
SUNRISE HIGHWAY
(NYS RT 27)

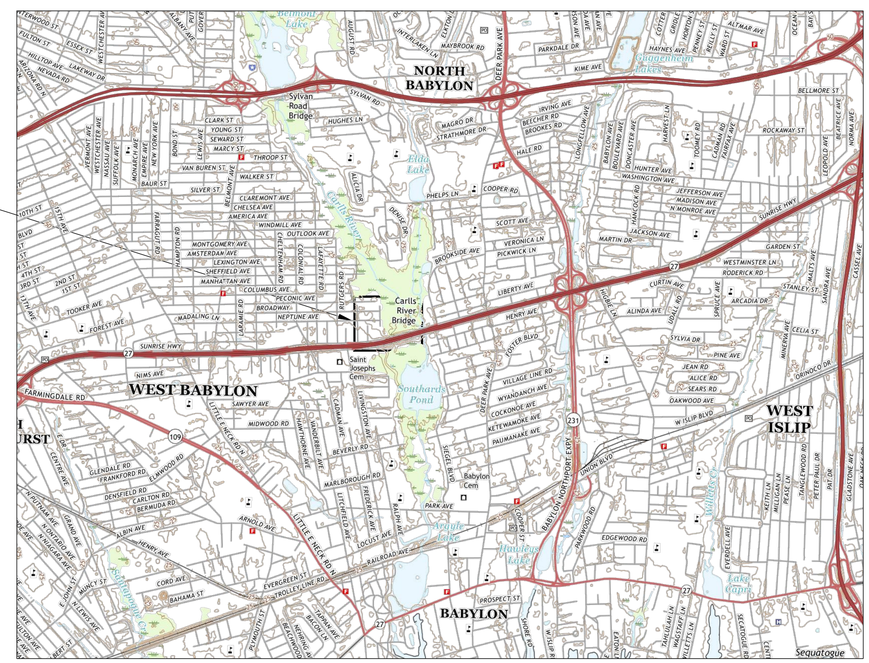

N

LOCATION MAP
N.T.S.

ALL WORK CONTEMPLATED UNDER THIS CONTRACT SHALL BE COVERED BY AND IN CONFORMITY WITH THE CURRENT NYSDOT STANDARD SPECIFICATIONS DATED 09/01/2018 (U.S. CUSTOMARY UNITS), EXCEPT AS MODIFIED ON THIS PLAN AND IN THE ITEMIZED PROPOSAL.

NYS EDUCATION LAW NOTE:

IT IS VIOLATION OF NYS EDUCATION LAW FOR ANY PERSON TO ALTER A DOCUMENT IN ANY WAY, UNLESS ACTING UNDER THE DIRECTION OF A LICENSED PROFESSIONAL ENGINEER. IF A DOCUMENT BEARING THE SEAL OF AN ENGINEER IS ALTERED, THE ALTERING ENGINEER SHALL AFFIX TO THE DOCUMENT THEIR SEAL AND THE NOTATION "ALTERED BY" FOLLOWED BY THEIR SIGNATURE AND THE DATE OF SUCH ALTERATION, AND A SPECIFIC DESCRIPTION OF THE ALTERATION.

PREPARED BY:

NV5
40 MARCUS DRIVE, SUITE 201
MELVILLE, NEW YORK 11747
P: 631.891.3200 WWW.NV5.COM

INDEX

TITLE SHEET....1
GENERAL NOTES & LEGEND....2-3
KEY PLAN....4
EXISTING CONDITIONS....5
CONSTRUCTION PLAN....6
GRADING AND DRAINAGE PLAN....7
PROFILES....8
LANDSCAPING PLAN....9
WORK ZONE TRAFFIC CONTROL....10-11
STAGING NOTES....12
MISCELLANEOUS DETAILS....13-19

DRAFT 90%
PROGRESS SET

LEGEND

DESCRIPTION	EXISTING	PROPOSED
OVERHEAD		
SEWER	S	
GAS	G	
WATER	W	
TELEPHONE/FIRE ALARM/CABLE	T	
RIGHT-OF-WAY (R.O.W.) LINE		
BENCHMARK		
STAKE FOUND		
MAGNAIL		
TRAFFIC SIGN (SINGLE POST)	OTS	
TRAFFIC SIGN (DOUBLE POST)		
GUY WIRE		
DIRECTION OF TRAFFIC		
SQUARE INLET GRATE		
ROUND INLET GRATE		
MANHOLE (NO ID)	MH	
DRAINAGE PIPE		
MONUMENT		
MAILBOX	MB	
SEWER	S	
ELECTRIC BOX	EB	
ELECTRIC METER/VALVE	E	
WATER METER/VALVE	W	
GAS	G	
TELEPHONE	T	
CABLE TV IRON	C	
WOODEN UTILITY POLE		
EXISTING ELEVATION	50.54 50.17	
BUILDING		
ENTRANCE TO BUILDING	ENT 9.86	
STONE WALL		
STONE COLUMN		
FENCE		
LOW PRESSURE FIRE HYDRANT		
HEDGES		
TREE		
DEPRESSED CURB	DC	
CURB		
SIDEWALK		
EDGE OF ASPHALT		
DETECTABLE WARNING UNIT	RAMP	
FULL DEPTH ASPHALT PAVEMENT RESTORATION		
ASPHALT DRIVEWAY RESTORATION		
CONCRETE SIDEWALK/CURB RAMP		
UTILITY GRASS STRIP AND VEGETATED AREAS RESTORATION		
CONCRETE DRIVEWAY APRON		
DREDGING DISPOSAL AREA		

UTILITY NOTES

THE CONTRACTOR'S ATTENTION IS DIRECTED TO UTILITIES IN THE AREA. THE CONTRACTOR SHALL SATISFY THEMSELVES AS TO THE EXACT LOCATION OF ALL UTILITIES AND WILL TAKE EVERY PRECAUTION NOT TO DISTURB THEM.

THE CONTRACTOR SHALL BE AWARE THAT UTILITY RELOCATIONS OR HIGHWAY PERMIT CONSTRUCTION MAY PROGRESS WITHIN THE LIMITS OF THIS PROJECT DURING THIS CONTRACT. THE CONTRACTOR SHALL COORDINATE WITH EACH UTILITY OR PERMITEE RESPONSIBLE FOR THE ALTERATION OR ADJUSTMENT OF FACILITIES WITHIN THE TOWN RIGHT OF WAY, UNLESS OTHERWISE STATED IN THE PLANS AND SPECIFICATIONS. IN SUCH CASE THAT LACK OF RESPONSE FROM SUCH, MAY CAUSE A DELAY WITH RESPECT TO THE COMPLETION DATE, THE CONTRACTOR MUST NOTIFY THE ENGINEER IN WRITING SO THAT APPROPRIATE STEPS CAN BE TAKEN.

THE CONTRACTOR WILL BE RESPONSIBLE FOR COORDINATING ANY UTILITY WORK WITH THE CONTRACT WORK. THE CONTRACTOR WILL ALSO BE RESPONSIBLE FOR PROVIDING LAYOUT FOR UTILITY COMPANY USE IN PLACING THEIR FACILITIES.

UTILITY COMPANIES INVOLVED (BUT NOT LIMITED TO):

NATIONAL GRID	JOHN ASARO	(516) 545-5222
SUFFOLK COUNTY WATER AUTHORITY	DAWN WARREN	(631) 563-0247
VERIZON	SEAN FLYNN	(631) 206-747
ALTICE	ROBERT EASON	(516) 803-7511
PSEG LONG ISLAND	SCOTT SIEGEL	(516) 418-1538

ABBREVIATIONS

ASPHALT	ASPH.	EXISTING	EXIST.
ASPHALT DRIVEWAY	A. DWY.	GRATE	GR.
BENCHMARK	B.M.	HEIGHT	H
BOTTOM OF WALL	B.W.	INVERT (ELEVATION)	INV.
BOTTOM OF CURB	BC	LENGTH	L
BRICK	BRK.	MANHOLE	MH
BRICK PAVERS	B.P.	MAILBOX	MB
BUILDING	BLDG.	NOT TO SCALE	N.T.S.
CENTER LINE	C.L.	OVERHEAD	O.H.
CHAIN LINK FENCE	C.L.F.	PAVEMENT	PVMT.
CONCRETE	CONC.	POINT OF CURVATURE	P.C.
CONCRETE CURB	C.C.	POINT OF TANGENCY	P.T.
CONCRETE DRIVEWAY	C. DWY.	RADIUS	R
CONCRETE SIDEWALK	C. SW.	REINFORCED CONCRETE PIPE	R.C.P.
DIAMETER	DIA.	ROADWAY	RDWY.
DOUBLE YELLOW STRIPE	D.Y.S.	SIDEWALK	S.W.
DRAIN	DR.	SOLID WHITE STRIPE	S.W.S.
DRAWING	DWG,	TOP OF CURB	TC
DRIVEWAY	DWY.	TOP OF WALL	T.W.
DROP CURB	DC	TRAFFIC SIGN	T.S.
EDGE OF PAVEMENT	E.O.P.	TYPICAL	TYP.
ELEVATION	ELEV.	WIDTH	W
ENTRANCE	ENT.	WOOD FENCE	W.F.

GENERAL NOTES

1. CONTRACTOR SHALL OBTAIN LONG ISLAND WELL PERMIT FOR TEMPORARY DEWATERING, IF NECESSARY. IN STREAM CONSTRUCTION OR ANY ACTIVITY THAT MAY INCREASE TURBIDITY IS PROHIBITED BETWEEN OCTOBER 1 AND MARCH 31.
2. ALL SLOPES ARE TO BE TRIMMED AND GRADED TO MEET EXISTING GROUND CONDITIONS AS DIRECTED BY THE ENGINEER. ALL AREAS DISTURBED BY THE CONSTRUCTION SHALL BE GRADED AND FINISHED AS INDICATED ON THE TYPICAL SECTIONS OR AS DIRECTED BY THE ENGINEER.
3. THE CONTRACTORS ATTENTION IS DIRECTED TO THE VEHICLE AND TRAFFIC LAW OF THE STATE OF NEW YORK IN REGARD TO THE SIZE AND WEIGHT OF VEHICLES. THE CONTRACTOR IS HEREBY NOTIFIED THAT NO VEHICLE IN EXCESS OF THE LIMITS SET BY THE VEHICLE AND TRAFFIC LAW WILL BE ALLOWED ON ANY PUBLIC ROAD.
4. THE CONTRACTOR SHALL PERFORM HIS WORK IN SUCH A MANNER AND SEQUENCE AS TO MAINTAIN TWO-WAY TRAFFIC ON EXISTING ROADS WHILE MAINTAINING FULL ACCESS TO ADJACENT PRIVATE PROPERTY. TEMPORARY PAVEMENT AND THE ASSOCIATED WARNING DEVICES SHALL BE INSTALLED BY THE CONTRACTOR IN ACCORDANCE WITH THE LATEST EDITION OF THE NATIONAL M.U.T.C.D. AND THE NEW YORK STATE SUPPLEMENT TO THE NATIONAL M.U.T.C.D.. THE APPROPRIATE ILLUSTRATION IN PART 6 OF SAID MANUAL SHALL BE APPLIED FOR ALL DETOURS AND SITUATIONS WHICH INTERFERE WITH TRAFFIC.
5. ANY TRENCH, PIT, OR OTHER EXCAVATION THAT IS OPEN AND UNATTENDED SHALL BE PROTECTED, AS DIRECTED BY THE ENGINEER, WITH FENCE, BARRICADES OR ANOTHER APPROVED METHOD. NO DIRECT PAYMENT WILL BE MADE FOR THIS WORK. ALL EXCAVATIONS SHALL BE CONDUCTED IN COMPLIANCE WITH THE NEW YORK INDUSTRIAL CODE RULE NO. 23-1.33, 2-8, 53 AND OSHA SAFETY AND HEALTH STANDARDS (29 CFR 1926/1910).
6. UPON PROJECT COMPLETION, THE AREA WITHIN THE TOWN RIGHT OF WAY SHALL BE CLEANED THOROUGHLY AND FREE OF ALL DEBRIS INCLUDING, BUT NOT LIMITED TO PLASTIC BOTTLES, PAPER CUPS, ETC. ADDITIONALLY, SIDEWALKS, BOTH EXISTING AND NEW, SHALL BE SWEPT AND EDGED. ALL AREAS UNDER GUIDERAILING, SIGNS, AND APPURTENANCES ALSO SHALL BE CLEAN OF DEBRIS. PAYMENT FOR THIS CLEANING SHALL BE INCLUDED IN OTHER ITEMS.
7. WHENEVER ITEMS IN THE CONTRACT REQUIRE MATERIAL TO BE REMOVED AND DISPOSED OF, THE COST OF SUPPLYING A DISPOSAL AREA AND TRANSPORTATION TO THAT AREA SHALL BE INCLUDED IN THE UNIT PRICE BID OF THOSE ITEMS.
8. USE OF A BREAKER BALL WILL NOT BE PERMITTED.
9. RESTORE ALL DRIVEWAYS AS DIRECTED BY THE ENGINEER.
10. RETAIN ALL EXISTING DRAINAGE STRUCTURES AND PIPE, EXCEPT AS SHOWN ON PLANS OR AS ORDERED BY THE ENGINEER.
11. THE CONTRACTOR IS ADVISED THAT THE PLANS AND OTHER CONTRACT DOCUMENTS HAVE BEEN PREPARED BASED ON THE BEST CURRENTLY AVAILABLE FIELD DATA. HOWEVER, ACTUAL FIELD CONDITIONS MAY VARY REQUIRING MODIFICATIONS TO THE CONSTRUCTION DETAILS AND WORK QUANTITIES. THE CONTRACTOR SHALL ADVISE THE ENGINEER OF VARIATIONS IN FIELD CONDITIONS, AND MODIFY HIS WORK TO CONFORM TO THESE CONDITIONS, AS ORDERED BY THE ENGINEER.
12. THE CONTRACTOR SHALL NOT WORK ON BOTH SIDES OF THE ROADWAY IN THE SAME AREA AT THE SAME TIME UNLESS APPROVED BY THE ENGINEER. REFER TO THE PROJECT SPECIFIC STAGING NOTES FOR FURTHER INSTRUCTION.
13. MEASURES SHALL BE TAKEN TO AVOID SPILLAGE OF ASPHALT CONCRETE MIX INTO STORM GRATES. ANY SUCH MATERIAL ENTERING ANY GRATES SHALL BE REMOVED BY THE CONTRACTOR AT HIS/HER EXPENSE A.O.B.E..
14. NO WORK OUTSIDE OF THE HIGHWAY BOUNDARY WILL BE PERMITTED UNDER ANY CIRCUMSTANCES UNLESS PROPERTY AND/OR EASEMENT RIGHTS ARE OBTAINED BY THE TOWN OF BABYLON, AND APPROVED BY N.Y.S.D.O.T.. MINOR DRIVEWAY RESTORATION OUTSIDE THE HIGHWAY BOUNDARY IS ONLY PERMITTED AFTER A SIGNED RELEASE FROM THE PROPERTY OWNER HAS BEEN SECURED.
15. ALL PROPOSED ROAD IMPROVEMENTS DETAILED IN THE SITE PLANS MUST BE DESIGNED IN ACCORDANCE WITH THE LATEST VERSIONS OF N.Y.S.D.O.T. HIGHWAY DESIGN MANUAL, THE NATIONAL MANUAL OF UNIFORM TRAFFIC CONTROL DEVICES ALONG WITH THE NY STATE SUPPLEMENT (M.U.T.C.D.) AND AASHTO.
16. THE CONTRACTORS ATTENTION IS DIRECTED TO EB 12-044, WHICH PROHIBITS THE USE OF MORTAR FOR CONCRETE MASONRY AND "ALTERNATE METHODS" FOR SEALING SPACE AROUND PIPE ENTRIES AND FOR GRADE ADJUSTMENT OF FRAMES/GRATES. THE CONTRACTOR SHALL USE EITHER CONCRETE GROUTING MATERIAL OR CONCRETE REPAIR MATERIAL FOR THIS PURPOSE. FOR LARGER SPACES AROUND PIPES, CONCRETE PAVERS COMPLETELY BEDDED IN GROUT OR CONCRETE REPAIR MATERIAL MAY BE USED. REFER TO NOTES 9 AND 10 ON STANDARD SHEET 604-02 FOR GUIDANCE.
17. CLEAR AND GRUB AS SHOWN ON PLANS OR AS DIRECTED BY THE ENGINEER.
18. PRIOR TO PERFORMING ANY TREE REMOVALS, THE CONTRACTOR SHALL MARK ANY TREE CALLED FOR BEING REMOVED ON THE PLANS. THE ENGINEER SHALL APPROVE ALL MARKED OUT TREES. NO TREES SHALL BE REMOVED EXCEPT WHERE SHOWN ON THE PLANS OR AS ORDERED BY THE ENGINEER.
19. CONTRACTOR SHALL NOT BE PERMITTED TO CLOSE DRIVEWAY ACCESS UNLESS THE PLACEMENT OF THE DRIVEWAY APRON CANNOT BE ACCOMPLISHED USING ANOTHER METHOD. IF CLOSING A DRIVEWAY IS NECESSARY, THE CONTRACTOR SHALL ONLY DO SO ON THE DAY OF THE ACTUAL CONCRETE PLACEMENT AND OPENED A MINIMUM OF 72 HOURS AFTER PLACEMENT OR A.O.B.E.
20. CONTRACTOR IS NOTIFIED THAT UNDERGROUND IRRIGATION MAY BE ENCOUNTERED AND SHALL BE PROTECTED BY THE CONTRACTOR. IF ANY PRIVATELY-OWNED UNDERGROUND IRRIGATION SYSTEM COMPONENTS, SUCH AS PIPES, SPRINKLER HEADS, VALVES, ARE ENCOUNTERED, THE CONTRACTOR SHALL NOTIFY THE ENGINEER. THE CONTRACTOR SHALL RELOCATE ANY SYSTEM COMPONENTS AS DIRECTED BY THE ENGINEER. THE COST OF THE WORK SHALL BE INCLUDED IN THE COST OF OTHER ITEMS.
21. WATCHMAN SERVICE – THE CONTRACTOR SHALL BE REQUIRED TO PROVIDE A WATCHMAN FOR THIS PROJECT.
22. HIGH-VISIBILITY SAFETY APPAREL SHALL BE WORN BY ALL FOOT TRAFFIC WORKERS TO PROVIDE CONSPICUITY DURING BOTH DAYTIME AND NIGHTTIME USAGE. THIS SAFETY APPAREL SHALL MEET PERFORMANCE CLASS 2 OR 3 REQUIREMENTS OF THE ANSI/ISEA 107-2004 PUBLICATION ENTITLED "AMERICAN NATIONAL STANDARD FOR HIGH-VISIBILITY SAFETY APPAREL AND HARDWARE."

REFERENCED NYSDOT STANDARD SHEETS

203-01, 402-01, 603-01, 604-02, 608-01, 608-03, 609-02, 609-03, 619-10, 619-11, 619-20, 619-60, 619-50, 619-66, 645-01, 645-03, 655-01, 655-03, 655-04, 655-05, 685-01.

DESIGNED BY: _____

CHECKED BY: _____

DRAWN BY: _____

COMPARED BY: _____

SYMBOL	DESCRIPTION	APPROVED	DATE

REVISIONS

NV5
40 MARCUS DRIVE, SUITE 201
MELVILLE, NEW YORK 11747
P: 631.891.3200 WWW.NV5.COM

CARLLS RIVER WATERSHED PROJECT
DRAFT PROGRESS PLANS

GENERAL NOTES – 01

PROJECT NO.	SCALE	DWG. NO	SHEET NO.
728518-0000340	N/A	GN-01	2 OF 19

S:\Project\728518-0000340.00-Carlls River Watershed Design Project\Technical\Cadd\Plan Sheets\04-00b-General Notes - Location 1.dwg

PAVING

1. TACK COAT SHALL BE APPLIED TO THE CONTACT SURFACES BETWEEN ALL HOT MIX ASPHALT PAVEMENT LIFTS REGARDLESS OF TIME PERIOD BETWEEN LIFTS OR CONSTRUCTION VEHICLE USE (EXCLUDING THE SURFACE OF PERMEABLE BASE MATERIAL). CONTRACTORS ATTENTION IS DIRECTED TO SUBSECTION 402–3.06 OF THE STANDARD SPECIFICATIONS.

2. SEASONAL LIMITATIONS FOR TOP COURSE – REFER TO N.Y.S.D.O.T. STANDARD SPECIFICATIONS SECTION 402–3.01.

3. IN THE CASE THAT THE SUB–BASE COURSE TYPE 1011–2 (ITEM 304.10119917) IS UNAVAILABLE, THE CONTRACTOR HAS THE OPTION TO USE ITEM 304.15 – OPTIONAL SUB–BASE COURSE, WITH THE APPROVAL OF THE E.I.C. PAYMENT WILL BE UNDER ITEM 304.10119917.

CURBS AND SIDEWALKS

1. IN AREAS WHERE CURB IS BEING REMOVED AND NEW CURB IS BEING INSTALLED, PAYMENT FOR THE EXISTING CURB REMOVAL SHALL BE INCLUDED UNDER ITEMS 609.04 & 609.05.

2. EXCEPT WHERE THE PLANS INDICATE OTHERWISE:

   A) THE SIDEWALK PORTION OF THE RAMP SHALL BE CONSTRUCTED OF REINFORCED CONCRETE 6 INCHES THICK.
   B) CURB AT THE RAMP LOCATION SHALL BE PLACED MONOLITHIC WITH THE SIDEWALK PORTION OF THE RAMP, PAYMENT FOR CURB AT THE RAMP LOCATION WILL BE INCLUDED UNDER THE CONCRETE SIDEWALK ITEM.
   C) THE ELEVATION OF THE BOTTOM OF THE CONCRETE AT THE CURBLINE SHALL MATCH THE BOTTOM OF PAVEMENT WHEN THE ADJACENT PAVEMENT IS CONCRETE AND THE BOTTOM OF SUBBASE WHEN THE ADJACENT PAVEMENT IS ASPHALT.

3. RECONSTRUCTION OF SIDEWALK AND RAMPS SHALL RESULT IN SLOPES EQUAL TO OR LESS THAN 7.5% UNLESS DOCUMENTED IN ACCORDANCE WITH THE N.Y.S.D.O.T. HIGHWAY DESIGN MANUAL CHAPTER 7. RECONSTRUCTION OF SIDEWALK AND RAMPS SHALL NOT INCREASE THE EXTENT OF NON CONFORMITY OF PEDESTRIAN ACCESSIBLE ROUTE (PAR) TO BUILDING ENTRANCES BEYOND THE ORIGINALLY EXISTING CONDITIONS. REFER TO NYSDOT STANDARD SHEET 608–01 (SHEETS 1 THRU 9) AND ED 15–004.

4. WHERE THE CROSS SLOPE OF AN ADJOINING SIDEWALK TO NEW SIDEWALK CURB RAMP IS GREATER THAN 1.5%, ONE SIDEWALK SLAB SHALL BE INSTALLED TO SERVE AS A TRANSITION BETWEEN NEW CONSTRUCTION AND OLD CONSTRUCTION.

5. DETECTABLE WARNING TILES MAY REQUIRE CUTTING TO ENSURE CORRECT ALIGNMENT WITH THE DIRECTION OF TRAVEL. DOMES SHOULD ALIGN WITH THE DIRECTION OF TRAVEL. CORNERS AND RAMPS MAY REQUIRE CARE INSTALLING THE DETECTABLE WARNING IN THE CORRECT ALIGNMENT. REFER TO STANDARD SHEET 608–01, SHEET 1 OF 9 UNDER "DETECTABLE WARNING NOTES" AND SHEET 2 OF 9 UNDER "DETECTABLE WARNING SURFACE (DWS) PLACEMENT OPTION DETAILS" FOR MORE INFORMATION.

6. THE CONTRACTOR SHALL COMPLETE ALL WORK THAT IS REQUIRED TO MEET ADA REQUIREMENTS AT EACH INDIVIDUAL SIDEWALK CURB RAMP WITHIN 72 HOURS OF COMMENCING EXCAVATION ON THAT RAMP.

7. IF THE FINAL TOP COURSE LAYER OF ASPHALT AT EACH INDIVIDUAL SIDEWALK CURB RAMP IS NOT PLACED PRIOR TO OPENING THE RAMP FOR PEDESTRIAN ACCESS, THEN TEMPORARY ASPHALT SHALL BE PLACED TO MAKE RAMP ACCESSIBLE MEETING ADA REQUIREMENTS. THE COST OF THE TEMPORARY ASPHALT SHALL BE INCLUDED UNDER THE COST FOR 619.01.

8. CONTRACTOR SHALL MAINTAIN PEDESTRIAN ACCESS AROUND WORK ZONE AT ALL TIMES. IF THE CONTRACTOR CHOOSES A DIFFERENT PEDESTRIAN ACCESS SCHEME FROM THOSE SHOWN ON STANDARD SHEETS, INCLUDING ESCORTING PEDESTRIANS AROUND THE WORK ZONE, THEN CONTRACTOR SHALL SUBMIT SUCH PLAN IN WRITING TO THE ENGINEER–IN–CHARGE FOR APPROVAL ONE WEEK PRIOR TO THE PROPOSED IMPLEMENTATION.

9. DURING THE PAVING OPERATION THE CONTRACTOR SHALL ENSURE THAT THE VERTICAL CHANGE (BETWEEN THE FINISHED PAVEMENT AND RAMP) AT ALL THE SIDEWALK CURB RAMPS WITHIN THE PROJECT LIMITS MEETS THE STANDARDS AND IS LESS THAN ¼ INCH ACROSS ENTIRE RAMP WIDTH.

10. WHERE PROPOSED CURB MEETS EXISTING CURB, THE CONTRACTOR SHALL REPLACE THE EXISTING CURB TO THE NEAREST JOINT BEYOND THE LIMIT SHOWN ON THE PLANS.

SAWCUTTING

1. SAW CUTTING PAVEMENT AND SIDEWALK ITEM NO. 520.09000010 WILL BE PAID ONLY AT THE LOCATIONS INDICATED ON THE PLANS OR AS ORDERED BY THE ENGINEER.

2. NO PAYMENT WILL BE MADE UNDER THE SAWCUT ITEMS IF THE PAYMENT FOR SAWCUT IS INCLUDED IN OTHER ITEMS.

DRAINAGE

1. THE CONTRACTOR SHALL CLEAN CLOSED DRAINAGE SYSTEMS UNDER ITEM 621.03 WITHIN THE FIRST THREE (3) MONTHS OF THE PROJECT. THE CONTRACTOR SHALL INSPECT THE DRAINAGE PIPE AS IT IS CLEANED AND IMMEDIATELY REPORT TO THE ENGINEER IF THE EXISTING PIPING IS DETERIORATED AND IN NEED OF REPLACEMENT. THE CONTRACTOR SHALL COMPARE THE FIELD CONDITION TO THE PLANS AND/OR PROPOSAL. IF IT IS DETERMINED THAT THE EXISTING PIPING MUST BE "REMOVED AND REPLACED", THE CONTRACTOR SHALL BE RESPONSIBLE FOR ALL DIMENSIONS, SHOP DRAWINGS, AND ORDERING OF THE MATERIALS. REMOVAL OF THE EXISTING DETERIORATED PIPING AND CONNECTION TO EXISTING DRAINAGE PIPES/STRUCTURES SHALL BE INCLUDED IN THE PRICE BID FOR THE NEW MATERIAL.

2. THE CONTRACTORS ATTENTION IS DIRECTED TO OSHA STANDARDS, SECTION 1926.651 (G), CONCERNING LOCATIONS OF POSSIBLE OXYGEN DEFICIENCY OR GASEOUS CONDITIONS THAT MIGHT BE ENCOUNTERED WHEN WORKING ON THE DRAINAGE SYSTEM.

3. MASONRY ADJUSTMENT COLLARS OR PORTIONS THEREOF SHALL BE REPAIRED. REPLACE LOOSE AND MISSING BRICKS AND MORTAR JOINTS WHERE NECESSARY AS DETERMINED BY THE ENGINEER. MATERIALS SHALL MEET THE REQUIREMENTS OF THE FOLLOWING SUBSECTIONS OF THE SPECIFICATIONS:
   CONCRETE PAVERS 704–13
   CONCRETE REPAIR MATERIAL, PORTLAND CEMENT BASED 701–04
   CONCRETE GROUTING MATERIALS 701–05

4. THE CONTRACTOR'S ATTENTION IS ALSO DIRECTED TO THE POSSIBILITY OF ENCOUNTERING GROUNDWATER DURING EXCAVATION AND WILL PROCEED WITH THEIR WORK HAVING FULL KNOWLEDGE OF THIS FACT.

5. CONTRACTOR SHALL VERIFY EXISTING AND PROPOSED RIM ELEVATIONS/INVERTS PRIOR TO FABRICATION OF NEW DRAINAGE STRUCTURES AND ADJUSTMENT OF CASTINGS.

6. THE CONTRACTOR'S ATTENTION IS DIRECTED TO EB 12–044, WHICH PROHIBITS THE USE OF MORTAR FOR CONCRETE MASONRY AND "ALTERNATE METHODS" FOR SEALING SPACE AROUND PIPE ENTRIES AND FOR GRADE ADJUSTMENT OF FRAME / GRATES. THE CONTRACTOR SHALL USE EITHER CONCRETE GROUTING MATERIAL OR CONCRETE REPAIR MATERIAL FOR THIS PURPOSE. FOR LARGE SPACES AROUND PIPES, CONCRETE PAVERS COMPLETELY BEDDED IN GROUT OR CONCRETE REPAIR MATERIAL MAY BE USED. NOTES 1–3, 2–6, AND 2–8 ON DRAWING NUMBER RGS 98–1 ARE AFFECTED AND SUPERCEEDED BY THE GUIDANCE PROVIDED BY NOTES 9 AND 10 ON STANDARD SHEETS 604–02(USC).

SURVEY

1. ADDITIONAL SURVEY AS ORDERED BY THE ENGINEER MAY BE NECESSARY ON MAINLINE AND ALL SIDE STREETS TO ELIMINATE STANDING WATER. COST TO BE INCLUDED IN ITEM 625.01 – SURVEY OPERATIONS.

2. THE CONTRACTOR IS NOTIFIED THAT PROPOSED SIDEWALK RAMPS SHALL BE LOCATED ON STATE OR LOCAL ROW. PRIOR TO BEGINNING WORK ON A RAMP, IF THE CONTRACTOR BELIEVES THE RAMP WORK SHALL EXTEND INTO PRIVATE PROPERTY, HE SHALL NOT WORK ON THAT RAMP AND IMMEDIATELY INFORM THE E.I.C. OF HIS FINDINGS. AT A LATER DATE, THE E.I.C. WILL MAKE A DETERMINATION AND INSTRUCT THE CONTRACTOR HOW TO PROCEED WITH THE WORK. IF IT IS NOT FEASIBLE TO CONSTRUCT THE PROPOSED SIDEWALK CURB RAMPS TO MEET THE N.Y.S.D.O.T. STANDARDS WITHOUT DISTURBING THE PRIVATE PROPERTY, THE RAMP RECONSTRUCTION FOR THAT LOCATION SHALL BE ELIMINATED FROM THE PROJECT AS APPROVED BY THE ENGINEER.

3. IN AREAS WHERE THE HIGHWAY BOUNDARY IS CLOSER THAN 3 FEET TO THE BACK OF THE PROPOSED SIDEWALK, IN ACCORDANCE WITH ITEM 625.01, SURVEY OPERATIONS, THE CONTRACTOR SHALL ESTABLISH THE HIGHWAY RIGHT–OF–WAY BOUNDARY CONCURRENTLY WITH THE CONSTRUCTION STAKE–OUT. THE HIGHWAY BOUNDARY SHALL BE ESTABLISHED WITH MARKERS APPROVED BY THE ENGINEER AND SAID MARKERS SHALL BE MAINTAINED THROUGHOUT THE LIFE OF THE CONTRACT. ALL WORK ASSOCIATED WITH THIS EFFORT SHALL BE INCLUDED IN THE UNIT PRICE BID FOR ITEM 625.01.

LANDSCAPING

1. AREAS TO BE SEEDED IN THE PROJECT MAY BE SUBJECT TO VEHICLE INTRUSIONS WHICH MAY RESULT IN THE NECESSITY OF RE–SEEDING AT NO EXTRA COST. THE CONTRACTOR IS ADVISED TO TAKE ADEQUATE PROTECTIVE MEASURES TO MINIMIZE SUCH VEHICLE INTRUSIONS.

2. PROVISION OF THE ABOVE SUGGESTED PROTECTIVE MEASURES SHALL NOT IN ANY WAY RELIEVE THE CONTRACTOR OF HIS RESPONSIBILITY FOR A SATISFACTORY TURF UNDER SUBSECTION 610–3.03(B) OF THE SPECIFICATIONS AND FOR THE CARE OF SEEDED TURF AREAS AND FOR PROTECTION OF THOSE AREAS FROM TRAFFIC AND OTHER DAMAGE .

3. THE CONTRACTOR SHALL TAKE EXTREME CARE NOT TO DAMAGE EXISTING VEGETATION. ANY DAMAGE TO VEGETATION SHALL BE RESTORED TO THE SATISFACTION OF THE ENGINEER–IN–CHARGE.

4. ALL AREAS DISTURBED BY THE WORK OF THIS CONTRACT SHALL BE FINISHED IN ACCORDANCE WITH THE SPECIFICATIONS FOR: TOPSOIL–LAWNS AND TURF ESTABLISHMENT–LAWNS (ITEM 610.1403 AND 610.1602) IN MEDIANS AND TOPSOIL–LAWNS AND SODDING (ITEM 610.1403 AND 610.18) IN UTILITY STRIPS AND RESIDENTIAL LAWN AREAS AND AS DIRECTED BY THE ENGINEER–IN–CHARGE.

5. SEED MIX: AS PER SECTION 713–04 SEED OF THE SPECIFICATIONS USE TYPE B – RESTORATION/HIGH TRAFFIC SEED MIX AS DESIGNATED ON THE PLANS. ALL SEEDED AREAS SHALL BE PROTECTED FROM THE ENTIRE LENGTH OF THE CONTRACT AND 1 YEAR OF MAINTENANCE POST PROJECT COMPLETION.

6. WATER SHALL BE APPLIED IN ACCORDANCE WITH THE REQUIREMENTS FOR THE
   ITEM FOR TURF ESTABLISHMENT 610–3.03. WATER SHALL BE APPLIED AT THE FOLLOWING RATE: WATERING SHALL BE REQUIRED FOR AREAS OF TURF ESTABLISHMENT IN THE ABSENCE OF 1 INCH OF RAINFALL WITHIN 5 CONSECUTIVE CALENDAR DAYS. THE CONTRACTOR SHALL WATER TURF A MINIMUM OF 3 TIMES TO A DEPTH OF 1 INCH PER EACH WATERING TO AID IN THE ESTABLISHMENT OF TURF. THE COST OF THIS WORK SHALL BE INCLUDED IN THE UNIT BID PRICE FOR ITEM 610.19. CONTRACTOR SHALL MOW AS NECESSARY FOLLOWING THE THE REQUIREMENTS OF ITEM 610.21 UNDER SUBSECTION 610–3.12(B) OF THE SPECIFICATIONS.

7. GRADE, PLACE SELECT MATERIAL, SEED AND MULCH AS SHOWN ON PLANS OR AS DIRECTED. USE MATERIAL AVAILABLE ON SITE UNLESS OTHERWISE STATED IN THE PLAN.

8. THE CONTRACTOR SHALL TRIM ALL EXISTING SHRUBS, BUSHES, AND TREES THAT ARE OVERHANGING ANY PUBLIC SIDEWALK IN ACCORDANCE WITH ITEM 201.06 AND AS ORDERED BY THE ENGINEER.

SIGNS

1. RESTORATION OF THE AREA AROUND SIGNS TO BE REMOVED, WHERE NO OTHER WORK IS PROPOSED, SHALL BE INCLUDED IN THE PRICE BID FOR SIGN REMOVAL. AREA SHALL BE RESTORED SIMILAR TO THE SURROUNDING AREAS, A.O.B.E..

2. CURRENT REQUIREMENTS FOR LATERAL CLEARANCE AND HEIGHT REQUIREMENTS FOR SIGNS ARE GIVEN ON THE STANDARD SHEET TITLED "STANDARD HEIGHT AND LATERAL LOCATION FOR TRAFFIC SIGNS, TYP, REG. & WARNING SIGNS ASSEMB.".

3. CURRENT REQUIREMENTS FOR LATERAL CLEARANCE AND HEIGHT REQUIREMENTS FOR SIGNS ARE GIVEN ON THE STANDARD SHEET 645–03 (SHEET 1 OF 2) TITLED "POSITIONING OF TRAFFIC SIGNS."

4. THE CONTRACTORS ATTENTION IS DIRECTED TO SUBSECTION 645–2.02 "SIGN PANELS" OF THE CURRENT NYSDOT STANDARD SPECIFICATIONS. THE REQUIRED IDENTIFICATION SHALL BE APPLIED TO ALL SIGN PANELS.

MAINTENANCE RESPONSIBILITY NOTES

1. MAINTENANCE OF THE PROPOSED FEATURES IS THE CONTRACTORS RESPONSIBILITY AND IS COVERED UNDER SUBSECTION 107–09.

2. THE CONTRACTORS RESPONSIBILITY SHALL INCLUDE THE NECESSARY RESPONSE, AS ORDERED BY THE ENGINEER (A.O.B.E.), TO DRAINAGE PROBLEMS THAT OCCUR DURING CONSTRUCTION. THIS MAY INCLUDE BUT IS NOT LIMITED TO
   THE FOLLOWING:
   A) SLOPE EROSION AND THE DRAINAGE PROBLEMS THAT MAY RESULT.
   B) THE COST OF THE WORK FOR PUMPING FLOODED AREAS WITHIN THE CONTRACT WILL BE INCLUDED IN THE PRICE BID FOR ITEM 619.01.

3. THE CONTRACTOR SHALL PATROL THE CONTRACT SITE DAILY AND REMOVE ALL DEBRIS, INCLUDING DEAD ANIMALS, FROM THE ROADWAY. THIS INCLUDES SWEEPING, REMOVING ACCIDENT DEBRIS, ETC. AS ORDERED BY THE ENGINEER (A.O.B.E.). THE COST FOR THIS WORK WILL BE INCLUDED IN THE PRICE BID FOR

   ITEM 619.01. ONE MONTH PRIOR TO ACCEPTANCE THE CONTRACTOR SHALL REMOVE ALL DEBRIS WITHIN THE CONTRACT LIMITS.

4. THE CONTRACTOR IS RESPONSIBLE FOR MAINTENANCE OF ALL CONSTRUCTION SIGNS. THE CONTRACTOR IS ALSO RESPONSIBLE FOR THE MAINTENANCE OF ALL EXISTING NON–ILLUMINATED GROUND MOUNTED SIGNS AND POSTS FOR M.U.T.C.D. PANELS.

5. THE CONTRACTOR SHALL PERFORM ALL WORK WITH THE CARE SO THAT ANY MATERIALS WHICH ARE TO REMAIN IN PLACE, OR WHICH ARE TO REMAIN THE PROPERTY OF THE TOWN WILL NOT BE DAMAGED. IF THE CONTRACTOR DAMAGES ANY MATERIALS WHICH ARE TO REMAIN IN PLACE, OR WHICH ARE TO REMAIN THE PROPERTY OF THE TOWN, THE DAMAGED MATERIALS SHALL BE REPLACED OR REPAIRED IN A MANNER SATISFACTORY TO THE ENGINEER AT THE EXPENSE OF THE CONTRACTOR.

TIMBER PILES

1. THE CONTRACTOR SHALL ASSUME THE LENGTH OF EACH PROPOSED TREATED TIMBER PILE AS 20 FT FOR ESTIMATION PURPOSES. THE INSTALLATION OF PROPOSED TREATED TIMBER PILES SHALL BE PAID UNDER ITEM NO. 551.04000010.

2. THE TREATED TIMBER PILES ARE DESIGNED TO SUPPORT A MAXIMUM ALLOWABLE LOAD OF 30 TONS PER PILE. FOR TREATED TIMBER PILE MATERIAL, TREATMENT, AND SIZE REQUIREMENTS SEE NYC BUILDING CODE SECTION 1809.1.

3. FOR TREATED TIMBER PILE INSTALLATION REQUIREMENTS SEE NYC BUILDING CODE SECTION 1808.2.8.1.5. THE TREATED TIMBER PILE SHALL BE DRIVEN USING THE DYNAMIC FORMULA WITH A HAMMER ENERGY OF 12 TO 16 FT/KIP PER NYC BUILDING CODE TABLE 1808.2.8.1.5B.

4. PROPOSED PILES, DRIVING CRITERIA, AND PILE DRIVING SETUP/EQUIPMENT ARE SUBJECT TO THE ENGINEER'S APPROVAL. SPECIAL INSPECTION OF PILE DRIVING AND LOAD TESTING IS REQUIRED. THIS WILL BE PROVIDED BY THE ENGINEER.

5. X (X) LATERAL LOAD TESTS SHALL BE PERFORMED FOLLOWING PROCEDURES OF ASTM D 3966 PER NYC BUILDING CODE SECTION 1808.2.9.3. THE TESTS SHALL BE PAID UNDER ITEM NO. 551.04000010.

6. NO SPLICING IS ALLOWED. DRIVING WITH FOLLOWERS IS NOT ALLOWED.

7. AS–DRIVEN PILE TOLERANCE SHALL BE AS SPECIFICED IN NYC BUILDING CODE SECTION 1808.2.21. AS–DRIVEN TIMBER PILES SHALL NOT BE IN EXCESS OF 3 INCHES FROM DESIGN LOCATIONS. AS–DRIVEN PILES SHALL NOT BE MORE THAN 4 PERCENT OUT OF PLUMB.

COFFERDAMS

1. SHOULD THE CONTRACTOR ELECT TO LAY BACK A PORTION OF THE EXISTING EARTH ADJACENT TO AN EXCAVATION REQUIRING A COFFERDAM, ANY REQUIRED EXTENSIONS OF THE COFFERDAM NECESSARY TO KEEP WATER FROM ENTERING THE EXCAVATION SHALL BE FURNISHED AND PLACED AT NO COST TO THE STATE.

2. WHERE A COFFERDAM IS USED, THE COST OF DEWATERING THE ENTIRE EXCAVATION, REGARDLESS OF SOURCE OF WATER SHALL BE INCLUDED IN THE UNIT PRICE BID FOR THE COFFERDAM ITEM.

3. IF MULTIPLE COFFERDAMS ARE REPLACED BY A SINGLE SYSTEM, AS PERMITTED BY THE ENGINEER, PAYMENT SHALL BE BASED ON ALL OF THE APPLICABLE COFFERDAM ITEMS INDICATED ON THE PLANS.

4. DEWATERING OF THE COFFERDAM SHALL BE ACCOMPLISHED BY PUMPING THE WATER TO AN APPROVED UPLAND VEGETATED AREA OUTSIDE OF THE STREAMBED AS SHOWN ON THE PLANS AND/OR APPROVED BY THE ENGINEER. TEMPORARY SOIL EROSION AND WATER POLLUTION CONTROL, SUCH AS STRAW BALES OR APPROVED EQUAL, MAY BE REQUIRED AS DETERMINED BY THE ENGINEER. NO SETTLEMENT BASIN SHALL BE CONSTRUCTED.

DESIGNED BY: _____
CHECKED BY: _____
DRAWN BY: _____
COMPARED BY: _____

SYMBOL	DESCRIPTION	APPROVED	DATE

REVISIONS

NV5
40 MARCUS DRIVE, SUITE 201
MELVILLE, NEW YORK 11747
P: 631.891.3200 WWW.NV5.COM

CARLLS RIVER WATERSHED PROJECT
DRAFT PROGRESS PLANS

GENERAL NOTES – 02

PROJECT NO.	SCALE	DWG. NO	SHEET NO.
728518–0000340	N/A	GN–02	3 OF 19

S:\Project\728518-0000340.00-Carlls River Watershed Design Project\Technical\Cadd\Plan Sheets\04-00b-General Notes - Location 1.dwg

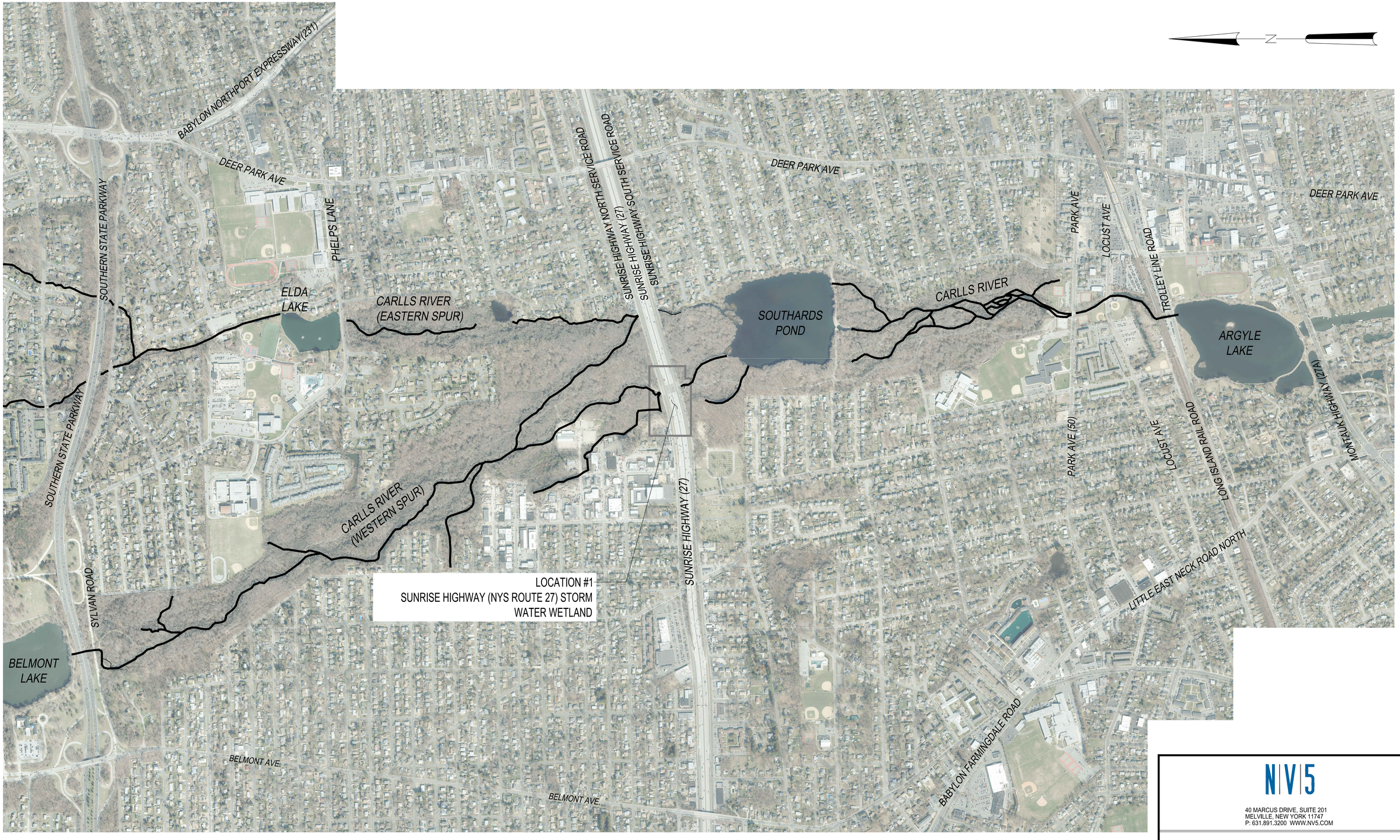

DESIGNED BY: _____

CHECKED BY: _____

DRAWN BY: _____

COMPARED BY: _____

SYMBOL	DESCRIPTION	APPROVED	DATE

REVISIONS

NV5

40 MARCUS DRIVE, SUITE 201
MELVILLE, NEW YORK 11747
P. 631.891.3200 WWW.NV5.COM

CARLLS RIVER WATERSHED PROJECT
DRAFT PROGRESS PLANS

KEY PLAN

PROJECT NO.	SCALE	DWG. NO	SHEET NO.
728518-0000340	1"=500'	KP-01	4 OF 19

S:\Project\728518-0000340.00-Carlls River Watershed Design Project\Technical\Cad\Plan Sheets\04-00c-Key Plan - Location 1.dwg

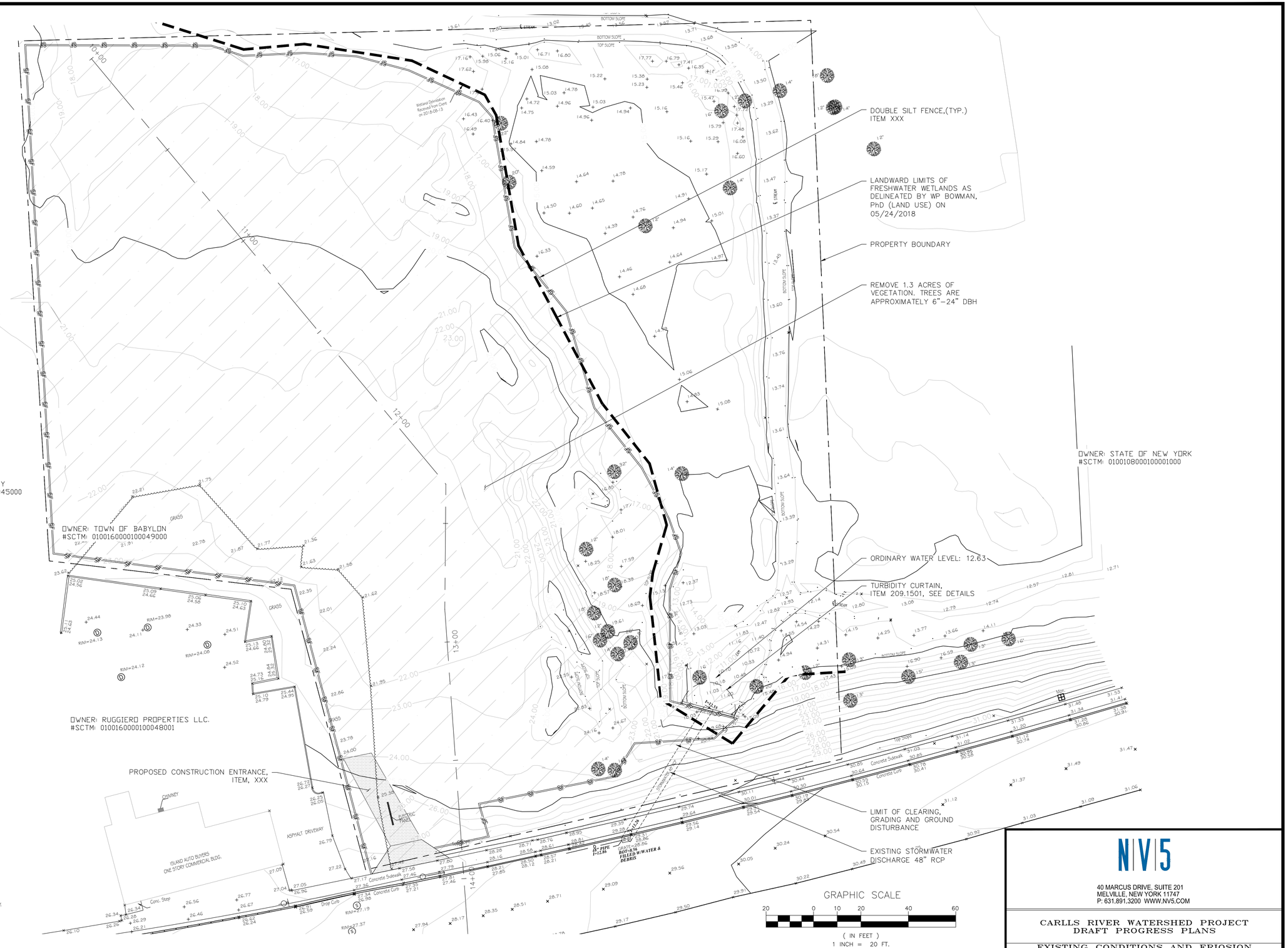

DESIGNED BY: _____

CHECKED BY: _____

DRAWN BY: _____

COMPARED BY: _____

SYMBOL	DESCRIPTION	APPROVED	DATE

REVISIONS

NV5
40 MARCUS DRIVE, SUITE 201
MELVILLE, NEW YORK 11747
P: 631.891.3200 WWW.NV5.COM

CARLLS RIVER WATERSHED PROJECT
DRAFT PROGRESS PLANS

EXISTING CONDITIONS AND ERIOSION AND SEDIMENTATION CONTROL PLAN
LOCATION #1 – SUNRISE HIGHWAY
(NYS RT27)

PROJECT NO.	SCALE	DWG. NO	SHEET NO.
728518–0000340	1"=20'	EC–L01	5 OF 19

S:\Project\728518-0000340.00-Carlls River Watershed Design Project\Technical\Cad\Plan Sheets\04-01-Existing Conditions Plans - Location 1.dwg

2'-6" TOP OF BERM
STA: 10+09.25
OFF: 40.80'R
VALENTE
PROPOSED AQUATIC BENCH SEE LANDSCAPE PLAN
10+00
11+00
BASIN
PROPOSED RIPRAP SCOUR HOLE AND APRON NO.1 (3 MD-03)
PROPOSED 6" HDPE ITEM 603.94000607
PROPOSED CONCRETE HEAD WALL STA: 11+88.92 OFF: 27.80'L (2 MD-03)
PROPOSED RIPRAP LINED FOREBAY SPILLWAY (4 MD-03)
WEN SESSA
50000100044001
PERMANENT POOL
STA: 11+35.71
OFF: 49.77'R
11'-6" (TYP.)
STA: 11+81.32
OFF: 12.80'R
STA: 11+83.31
OFF: 3.35'R
STA: 11+74.61
OFF: 32.08'R
12' (TYP.)
FOREBAY
STA: 11+31.99
OFF: 94.74'R
STA: 11+77.30
OFF: 116.12'R
STA: 11+39.89
OFF: 137.89'R
SUSAN HEARTY
0100160000100045000
STA: 11+55.39
OFF: 141.07'R
STA: 11+95.43
OFF: 71.76'R
R83'
OWNER: TOWN OF BABYLON
#SCTM: 0100160000100049600
R32'
R78'-3"
PROPOSED 6'-6" HT. CHAINLINK FENCE, ITEM 607.0522
PROPOSED GABION WALL (MD-07)
PROPOSED MAINTENANCE DRIVEWAY (PRECAST CONCRETE GRASS PAVER ITEM 608.13000008) (5 MD-06)
24" RCP END SECTION ITEM # 603.7305 STA: 20+00.64 OFF: 33.56'R
STA: 12+72.74
OFF: 60.22'R
STA: 12+93.91
OFF: 54.01'R
STA: 13+03.19
OFF: 42.21'R
STA: 13+03.65
OFF: 54.16'R
STA: 13+13.59
OFF: 28.07'R
STA: 13+21.99
OFF: 51.68'R
OWNER: RUGGIERO PROPERTIES LLC.
#SCTM: 0100160000100048001
STA: 13+35.20
OFF: 23.93'R
GRAVEL
STA: 13+54.43
OFF: 33.06'R
PROPOSED MAINTENANCE DRIVEWAY (ASPHALT) (5 MD-06)
PROPOSED CHAINLINK FENCE GATE ITEM 607.1661
PROPOSED DIVERSION STRUCTURE (1 MD-02)
PROPOSED CONCRETE SIDEWALK
PROPOSED DRIVEWAY APRON (3 MD-06)
R16'-5"
16'
22'
12'
R24'-2"
13+00
STA: 13+10.55
OFF: 12.16'R
STA: 13+32.16
OFF: 8.02'R
PRETREATMENT DEVICE RIMS: MATCH FINISHED GRADE (MD-01)
PROPOSED CHAINLINK FENCE ITEM 607.0522
LIMIT OF CLEARING, GRADING AND GROUND DISTURBANCE
EXISTING 48" STORM (APPROX.)
CONC
SUNRISE HWY NORTH SERVICE RD
SUNRISE HIGHWAY
STA: 11+38.56
OFF: 109.46'L
STA: 11+36.92
OFF: 75.04'L
GRASS
PROPOSED RIPRAP LINED EMERGENCY SPILLWAY (4 MD-03)
11'-6" TOP OF EMERGENCY SPILLWAY
STA: 11+75.84
OFF: 87.93'L
STA: 11+74.64
OFF: 62.81'L
STA: 11+91.39
OFF: 84.69'L
2'-6" TOP OF PROPOSED BERM
LANDWARD LIMITS OF FRESHWATER WETLANDS AS DELINEATED BY WP BOWMAN, PhD (LAND USE) ON 05/24/2018
27' MIN.
STA: 12+13.30
OFF: 51.74'L
PROPOSED RISER STRUCTURE (1 MD-03)
PROPOSED 30" RCP ITEM 603.6107
PROPOSED 30" RCP END SECTION ITEM 603.7305
STA: 12+46.09
OFF: 60.31'L
STA: 12+28.17
OFF: 6.95'R
PROPOSED RIPRAP SCOUR HOLE AND APRON NO. 2 (3 MD-03)
5'
PROPOSED VEGETATED DRAINAGE SWALE SEE LANDSCAPE PLAN
EXISTING SPOT ELEVATION (TYP.)
STREAM EDGE
PROPERTY BOUNDARY
OWNER: STATE OF NEW YORK
#SCTM: 0100108000100001000
N

GRAPHIC SCALE
20 0 10 20 40 60
(IN FEET)
1 INCH = 20 FT.

NOTE:

IN-STREAM CONSTRUCTION OR ANY ACTIVITY THAT MAY INCREASE TURBIDITY IS PROHIBITED BETWEEN OCTOBER 1ST AND MARCH 31ST.

DESIGNED BY:
CHECKED BY:
DRAWN BY:
COMPARED BY:

SYMBOL	DESCRIPTION	APPROVED	DATE

REVISIONS

NV5
40 MARCUS DRIVE, SUITE 201
MELVILLE, NEW YORK 11747
P: 631.891.3200 WWW.NV5.COM

CARLLS RIVER WATERSHED PROJECT
DRAFT PROGRESS PLANS

CONSTRUCTION PLAN
LOCATION #1 – SUNRISE HIGHWAY
(NYS RT27)

PROJECT NO.	SCALE	DWG. NO	SHEET NO.
728518-0000340	1"=20'	LM-L01	6 OF 19

S:\Project\728518-0000340.00-Carlls River Watershed Design Project\Technical\Cadd\Plan Sheets\04-02-Construction Plan - Location 1.dwg

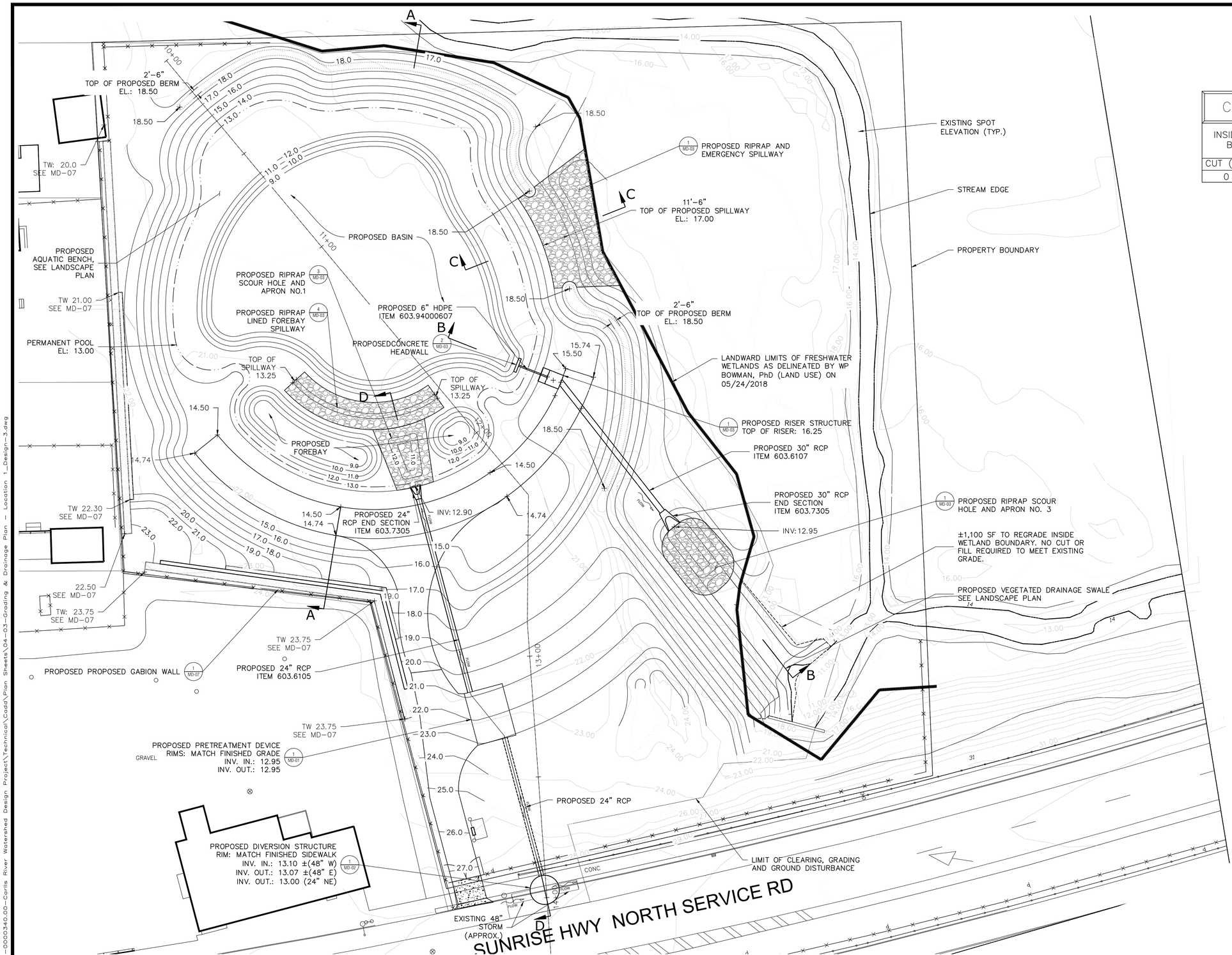

CUT/FILL QAUNTITIES

INSIDE WETLAND BOUNDARY		ADJACENT TO WETLAND BOUNDARIES	
CUT (CY)	FILL (CY)	CUT (CY)	FILL (CY)
0	0	11,300	0

GRAPHIC SCALE

20 0 10 20 40 60

(IN FEET)
1 INCH = 20 FT.

DESIGNED BY:
CHECKED BY:
DRAWN BY:
COMPARED BY:

SYMBOL	DESCRIPTION	APPROVED	DATE

REVISIONS

NV5
40 MARCUS DRIVE, SUITE 201
MELVILLE, NEW YORK 11747
P: 631.891.3200 WWW.NV5.COM

CARLLS RIVER WATERSHED PROJECT
DRAFT PROGRESS PLANS

GRADING & DRAINAGE PLAN
LOCATION #1 – SUNRISE HIGHWAY
(NYS RT27)

PROJECT NO.	SCALE	DWG. NO	SHEET NO.
728518-0000340	1"=20'	GD-L01	7 OF 19

S:\Project\728518-0000340.00-Carlls River Watershed Design Project\Technical\Cadd\Plan Sheets\04-03-Grading & Drainage Plan - Location 1_Design-3.dwg

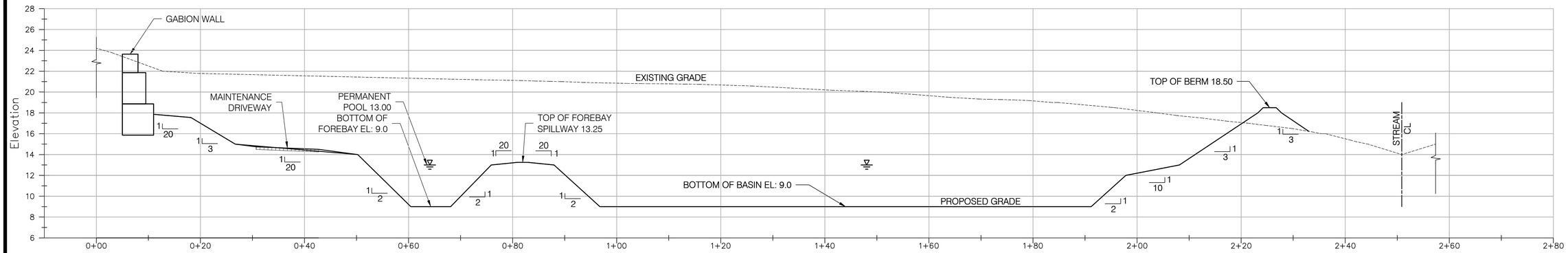

SECTION A-A

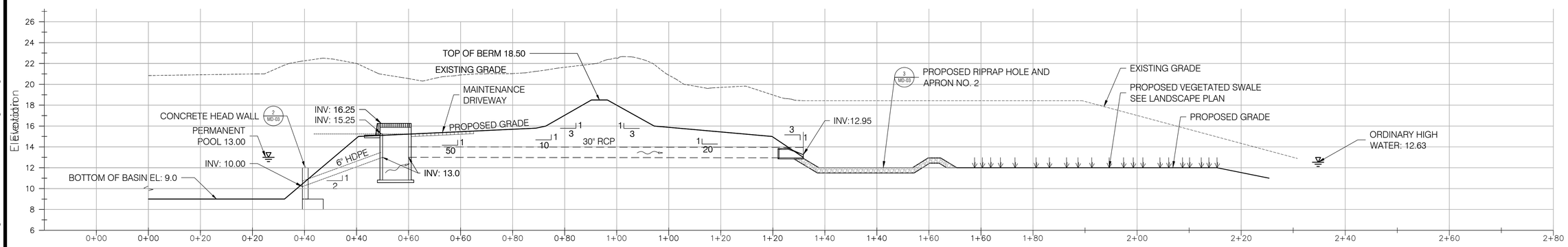

SECTION B-B

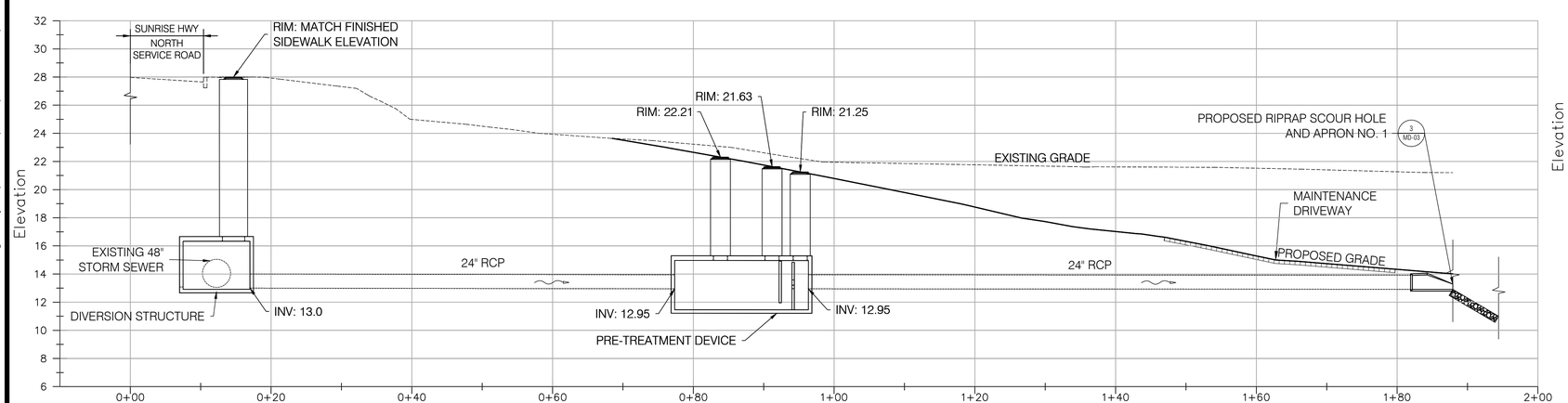

SECTION D-D

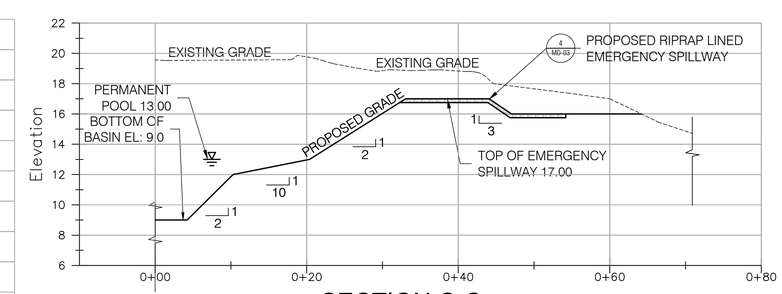

SECTION C-C

DESIGNED BY:
CHECKED BY:
DRAWN BY:
COMPARED BY:

VERTICAL SCALE
(IN FEET)
1 INCH = 5 FT.

HORIZONTAL SCALE
(IN FEET)
1 INCH = 10 FT.

SYMBOL	DESCRIPTION	APPROVED	DATE
	REVISIONS		

NV5
40 MARCUS DRIVE, SUITE 201
MELVILLE, NEW YORK 11747
P: 631.891.3200 WWW.NV5.COM

CARLLS RIVER WATERSHED PROJECT
DRAFT PROGRESS PLANS

GRADING & DRAINAGE SECTIONS
LOCATION #1 – SUNRISE HIGHWAY
(NYS RT27)

PROJECT NO.	SCALE	DWG. NO	SHEET NO.
728518-0000340	1"=10'	S1-L01	8 OF 19

S:\Project\728518-0000340.00-Carlls River Watershed Design Project\Technical\Cadd\Plan Sheets\04-03-Grading & Drainage Plan - Location 1_Design-3.dwg

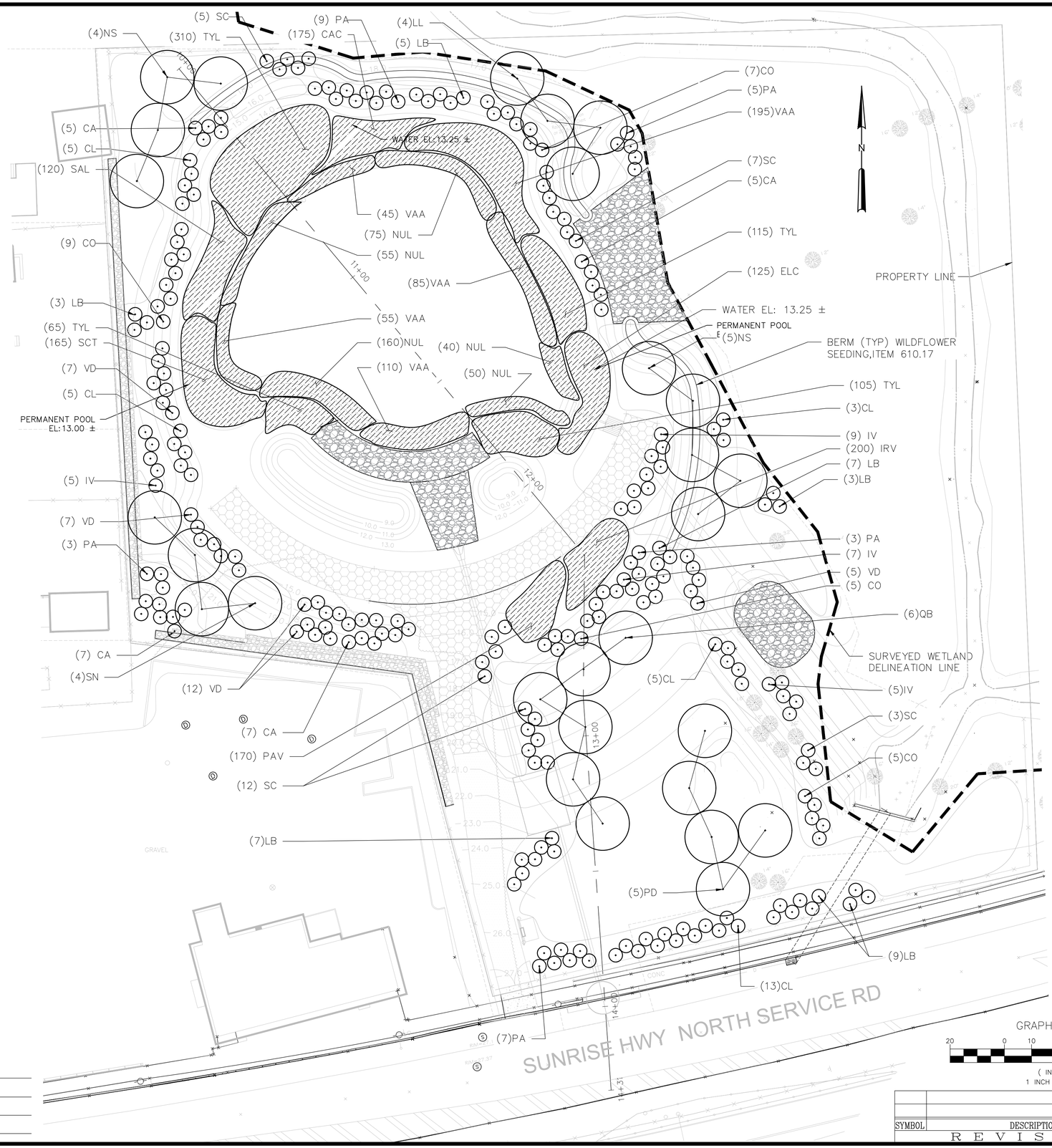

PLANTING NOTES:.

1. PLANT MATERIALS WERE SELECTED USING THE NEW YORK STATE STORMWATER MANAGEMENT DESIGN MANUAL, APPENDIX H: LANDSCAPING GUIDANCE/PLANT LISTS
2. FOR ADDITIONAL INFORMATION ABOUT UPLAND PLANTING AREAS, SHRUB PLANTING AREAS AND UPLAND SEEDING AREAS SEE LANDSCAPE PLAN AND TYPICAL SHORELINE SECTIONS.
3. ALL PLANT MATERIAL SHALL CONFORM TO THE REQUIREMENTS AS ESTABLISHED BY THE AMERICAN ASSOCIATION OF NURSERYMAN, LATEST EDITION.
4. SEE SPECIFICATIONS FOR ITEMS NOT COVERED ON THE PLANS AND DETAILS.
5. THE SITE SHALL BE KEPT NEAT AT ALL TIMES AND SHALL BE KEPT FREE OF DEBRIS LEFT FROM THE PLANTING OPERATION. THE CONTRACTOR IS TO USE CARE DURING EXCAVATION AND PLANTING TO AVOID DISTURBING OR DAMAGING ANY ADJACENT CONSTRUCTION SUBSURFACE DRAINAGE OR UTILITIES. ANY DAMAGE RESULTING FROM THIS CONSTRUCTION WILL BE THE CONTRACTOR'S RESPONSIBILITY AND SHALL BE RESTORED AT HIS EXPENSE TO THE SATISFACTION OF THE OWNER.
6. CONTRACTOR SHALL SUPPLY PLANT MATERIAL IN THE QUANTITIES INDICATED IN THE INDIVIDUAL CALL–OUTS ON THE PLANTING PLANS. SHOULD THERE BE DISCREPANCIES BETWEEN THE PLAN CALL–OUTS AND THE PLANT SCHEDULE, THE PLAN CALL–OUT SHALL DETERMINE FINAL QUANTITIES.
7. PLANT MATERIAL LOCATIONS ON THE PLANTING PLANS ARE APPROXIMATE AND SHALL BE ADJUSTED AS DIRECTED BY THE LANDSCAPE ARCHITECT IN THE FIELD. SHOULD PLANTS BE INSTALLED PRIOR TO LANDSCAPE ARCHITECT'S FIELD STAKING AND/OR PLACEMENT DIRECTION, CONTRACTOR SHALL PLANT AT THEIR OWN RISK.
8. ALL DISTURBED (±2,200 SY) AREA SHALL BE SEEDED WITH THE FOLLOWING WETLAND RESTORATION MEADOW MIX:

8.1. MIX COMPOSITION:
33.2% CAREX VULPINOIDEA, (FOX SEDGE)
20.0% ELYMUS VIRGINICUS, (VIRGINIA WILDRYE)
8.0% CAREX LUPULINA, (HOP SEDGE)
8.0% CAREX LURIDA, (LURID (SHALLOW) SEDGE)
8.0% CAREX SCOPARIA, (BLUNT BROOM SEDGE)
4.0% VERBENA HASTATA, (BLUE VERVAIN)
3.0% CINNA ARUNDINACEA, (WOOD REEDGRASS)
3.0% JUNCUS EFFUSUS, (SOFT RUSH)
2.5% ASCLEPIAS INCARNATA, (SWAMP MILKWEED)
2.0% HELIOPSIS HELIANTHOIDES, (OXEYE SUNFLOWER)
1.2% ASTER PUNICEUS, (PURPLESTEM ASTER)
1.2% ASTER UMBELLATUS, (FLAT TOPPED WHITE ASTER)
1.0% EUPATORIUM PERFOLIATUM, (BONESET)
1.0% HELENIUM AUTUMNALE, (COMMON SNEEZEWEED)
0.6% ASTER NOVAE–ANGLIAE (SYMPHYOTRICHUM), (NEW ENGLAND ASTER)
0.5% ALISMA SUBCORDATUM, (MUD PLANTAIN (WATER PLANTAIN))
0.5% LOBELIA SIPHILITICA, (GREAT BLUE LOBELIA)
0.5% PENTHORUM SEDOIDES, (DITCH STONECROP)
0.5% SCIRPUS ATROVIRENS, (GREEN BULRUSH)
0.5% SCIRPUS CYPERINUS, (WOOLGRASS)
0.3% EUPATORIUM FISTULOSUM, (JOE PYE WEED)
0.3% ONOCLEA SENSIBILIS (SENSITIVE FERN)
0.1% CHELONE GLABRA, (TURTLEHEAD)
0.1% MIMULUS RINGENS, (SQUARE STEMMED MONKEYFLOWER)

GRAPHIC SCALE
20 0 10 20 40 60
(IN FEET)
1 INCH = 20 FT.

DESIGNED BY:
CHECKED BY:
DRAWN BY:
COMPARED BY:

SYMBOL	DESCRIPTION	APPROVED	DATE

REVISIONS

NV5
40 MARCUS DRIVE, SUITE 201
MELVILLE, NEW YORK 11747
P: 631.891.3200 WWW.NV5.COM

CARLLS RIVER WATERSHED PROJECT
DRAFT PROGRESS PLANS

LANDSCAPE PLAN
LOCATION #1 – SUNRISE HIGHWAY
(NYS RT27)

PROJECT NO.	SCALE	DWG. NO	SHEET NO.
728518–0000340	1"=20'	LP–01	9 OF 19

S:\Project\728518-0000340.00-Carlls River Watershed Design Project\Technical\Cad\Plan Sheets\04-05-Landscape Plans - Location 1.dwg

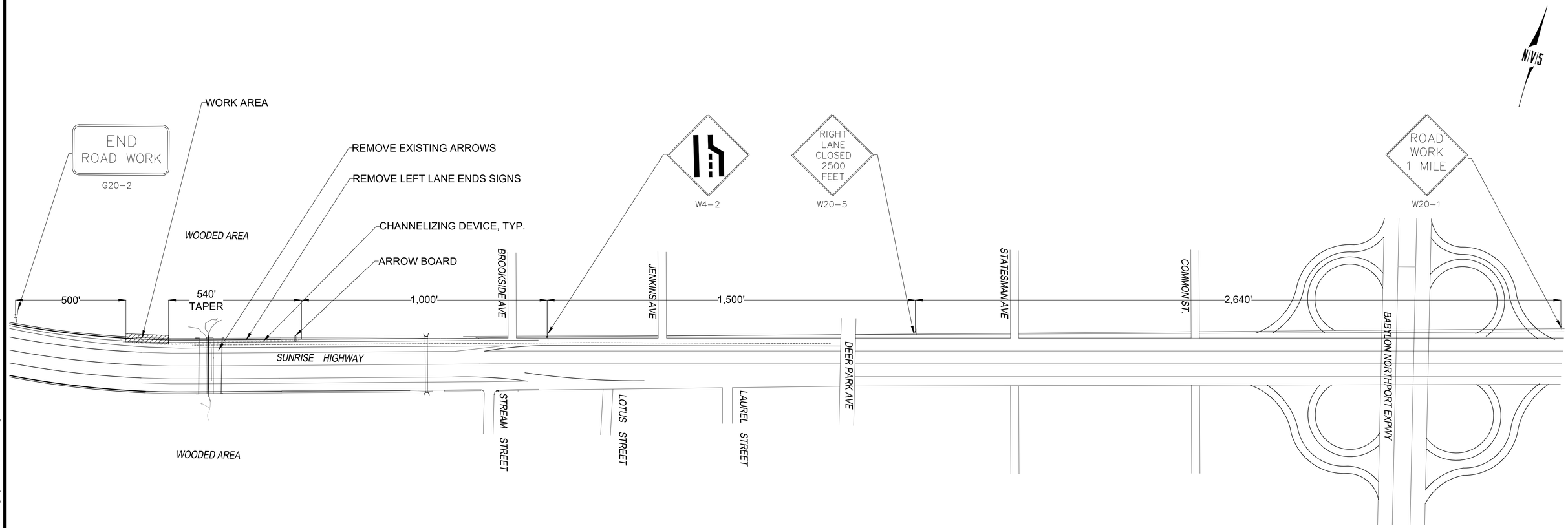

S:\Project\728518-0000340.00-Carlls River Watershed Design Project\Technical\Cadd\Plan Sheets\04-05-WZTC & Staging - Location 1.dwg

DESIGNED BY: _____

CHECKED BY: _____

DRAWN BY: _____

COMPARED BY: _____

SYMBOL	DESCRIPTION	APPROVED	DATE

R E V I S I O N S

N|V|5

40 MARCUS DRIVE, SUITE 201
MELVILLE, NEW YORK 11747
P: 631.891.3200 WWW.NV5.COM

CARLLS RIVER WATERSHED PROJECT
DRAFT PROGRESS PLANS

WORK ZONE TRAFFIC CONTROL PLAN
LOCATION #1 – SUNRISE HIGHWAY
(NYS RT27)

PROJECT NO.	SCALE	DWG. NO	SHEET NO.
728518-0000340	1"=200'	WZTC-01	10 OF 19

WORK ZONE TRAFFIC CONTROL

GENERAL:

1. THESE ARE GENERAL WORK ZONE TRAFFIC CONTROL NOTES. CERTAIN REQUIREMENTS SHOWN MAY NOT BE APPLICABLE FOR THIS CONTRACT.

2. THE CONTRACTOR SHALL BE RESPONSIBLE FOR ALL WORK ZONE TRAFFIC CONTROL (WZTC). WZTC SCHEMES SHALL CONFORM TO THE REQUIREMENTS OF THE NYSDOT STANDARD SPECIFICATIONS AND SHEETS SECTION 619 AND NATIONAL MANUAL OF UNIFORM TRAFFIC CONTROL DEVICES WITH NYS SUPPLEMENT (MUTCD) AND THESE SHEETS ARE TO BE CONSIDERED MINIMUM REQUIREMENTS. THE ENGINEER MAY ORDER ADDITIONAL WZTC DEVICES SUCH AS SIGNS, CONES, DRUMS, FLAGGERS, REFLECTORIZATION, SHADOW VEHICLES, FLASHING AND STEADY BURN LIGHTS, TEMPORARY CONCRETE BARRIER, LIGHTS FOR NIGHTTIME OPERATIONS, ETC., IF HE DEEMS IT NECESSARY AT NO ADDITIONAL COST TO THE TOWN. PAYMENT FOR ALL SUCH WORK SHALL BE INCLUDED IN ITEM 619.01 BASIC WORKZONE TRAFFIC CONTROL.

3. CONTRACTOR SHALL SUBMIT IN WRITING A WORK ZONE TRAFFIC CONTROL PLAN, CONFORMING TO THE REQUIREMENTS OF THE NYSDOT STANDARD SPECIFICATIONS AND SHEETS SECTION 619 AND NATIONAL MANUAL OF UNIFORM TRAFFIC CONTROL DEVICES WITH NYS SUPPLEMENT (MUTCD), TO THE ENGINEER FOR APPROVAL PRIOR TO STARTING CONSTRUCTION.

4. THE CONTRACTOR IS PLACED ON NOTICE THAT THE MAINTENANCE AND PROTECTION OF TRAFFIC OVER THE HIGHWAY DURING CONSTRUCTION IS CONSIDERED AS IMPORTANT AND NECESSARY AN ITEM OF WORK AS IS THE ACTUAL CONSTRUCTION ITSELF. THE CONTRACTOR SHALL AT ALL TIMES CONDUCT HIS OPERATION IN A MANNER TO INSURE THE SAFETY OF NOT ONLY THE MOTORIST BUT ALSO THE PEDESTRIAN AND HIS OWN EMPLOYEES.

5. THE CONTRACTOR MUST SUBMIT TO THE ENGINEER IN WRITING PROPOSED REVISIONS TO THE TEMPORARY TRAFFIC CONTROL PLANS FOR REVIEW AND APPROVAL BY THE EIC OR DESIGNEE FIVE (5) WORKING DAYS PRIOR TO THE PLANNED IMPLEMENTATION OF SUCH PROPOSED REVISION, EXCEPT FOR CHANGES THAT ALTER THE BASIC CONCEPT OF THE TRAFFIC CONTROL PLAN. SUCH CONCEPTUAL CHANGES MUST BE SUBMITTED TO THE ENGINEER FOR APPROVAL OR DESIGNEE THIRTY (30) DAYS PRIOR TO IMPLEMENTATION OF SUCH REVISIONS.

6. VEHICLES OR EQUIPMENT ARE NOT TO BE PARKED WITHIN THE CLEAR ZONE, ALONG THE ROADWAY USED BY THE GENERAL PUBLIC, OR ANY OTHER AREAS DEEMED HAZARDOUS BY THE ENGINEER.

7. VEHICLES BELONGING TO THE CONTRACTOR OR THE CONTRACTOR'S EMPLOYEES SHALL NOT BE PARKED ON THE PAVEMENT OR SHOULDERS ALONG THE ROADWAY WHERE PARKING IS NOT NORMALLY PERMITTED.

8. ANY GUIDE RAIL OR CONSTRUCTION APPLIANCE TEMPORARILY REMOVED TO GAIN ACCESS TO A WORK AREA SHALL BE REPLACED AT THE END OF EACH WORK PERIOD.

9. DURING NON–WORKING HOURS, ALL CONSTRUCTION EQUIPMENT AND MATERIALS SHALL BE STORED OFF OF ALL PAVEMENTS, IN AN AREA WHERE THEY ARE NOT DEEMED A HAZARD TO TRAFFIC AND PEDESTRIANS. STORED CONSTRUCTION EQUIPMENT SHALL NOT OBSTRUCT VEHICULAR AND PEDESTRIAN TRAFFIC OR ACCESS.

10. UNLESS APPROVED BY ENGINEER, THE MINIMUM LANE WIDTHS FOR WORK ZONE TRAVEL LANES SHALL BE AS FOLLOWS: FREEWAYS, EXPRESSWAYS, AND/OR SERVICE ROADS: 11'. FOR ALL OTHER TYPES OF ROADS: 10'.

ACTIVITY AREA:

11. CONSTRUCTION (INCLUDING UTILITY RELOCATIONS) SHALL BE RESTRICTED TO ONE SIDE OF ANY ROADWAY OR INTERSECTION UNTIL THAT SIDE IS COMPLETED AND OPEN TO ALL VEHICULAR AND PEDESTRIAN TRAFFIC.

12. WHEN PERMITTED THE CONTRACTOR SHALL MAINTAIN A MINIMUM 500' LONGITUDINAL DISTANCE BETWEEN CONSTRUCTION OPERATIONS ON ALTERNATE SIDES OF THE ROADWAY, UNLESS OTHERWISE APPROVED BY THE ENGINEER.

LANE CLOSURES:

13. UNLESS OTHERWISE PROVIDED IN THE CONTRACT DOCUMENTS, NO LANE CLOSINGS AND LANE SHIFTS WILL BE PERMITTED ON WEEKENDS.

ALSO, NO LANE CLOSINGS WILL BE PERMITTED:

- FROM NOON ON THE FRIDAY BEFORE MEMORIAL DAY THROUGH MEMORIAL DAY;
- INDEPENDENCE DAY;
- LABOR DAY;
- VETERAN'S DAY;
- FROM NOON THE DAY BEFORE THANKSGIVING DAY THROUGH THE SUNDAY FOLLOWING THANKSGIVING DAY
- THE DAY PRECEDING CHRISTMAS DAY
- CHRISTMAS DAY;
- THE DAY PRECEDING NEW YEAR'S DAY;
- NEW YEAR'S DAY

13. TWO WAY TRAFFIC AND ACCESS TO ALL PRIVATE PROPERTY MUST BE MAINTAINED AT ALL TIMES.

14. IF, IN THE OPINION OF THE ENGINEER, SHORT TERM LANE CLOSURES ARE CREATING EXCESSIVE DELAYS TO TRAFFIC OR ARE CREATING A SAFETY CONCERN DUE TO SLOW OR STOPPED TRAFFIC, THE AFFECTED LANE CLOSURE SHALL BE REMOVED AND THE ROADWAY OPENED TO TRAFFIC.

15. THE ENGINEER MAY REQUIRE THAT ALL LANES BE RE–OPENED AT ANY TIME IF THE ROUTE IS NEEDED FOR EMERGENCY PURPOSES. THIS COULD INCLUDE INCIDENTS AT LOCATIONS NOT WITHIN THE PROJECT LIMITS.

16. MOVING LANE CLOSURES MAY BE USED WHEN TEMPORARY WORK IS BEING PERFORMED SUCH AS SWEEPING, PAVEMENT MARKINGS, ETC.

17. THE CONTRACTOR SHALL LOCATE LANE CLOSURES TO PROVIDE OPTIMUM VISIBILITY, I.E. BEFORE CURVES AND CRESTS, TO THE EXTENT CONDITIONS PERMIT.

18. SHORT–TERM LANE CLOSURES WITH TWO–LANE TWO–WAY ROADWAY OPERATION WITH FLAGGERS MAY BE PERMITTED AS DETERMINED BY THE ENGINEER. NYSDOT STANDARD SHEET 619–60 SHALL BE FOLLOWED FOR THIS OPERATION.

19. SHOULDER CLOSURES SHALL BE PERMITTED AS DETERMINED BY THE ENGINEER. NYSDOT STANDARD SHEET 619–20 SHALL BE FOLLOWED FOR THIS OPERATION.

20. ALL LANES (AND SHOULDERS) SHALL BE REOPENED AT THE END OF EACH WORK DAY. TEMPORARY ASPHALT PATCHES MAY BE USED AS DETERMINED BY THE ENGINEER. TEMPORARY ASPHALT WILL BE PAID FOR UNDER ITEM 619.01.

SIGNING:

21. ANY EXISTING SIGNS WHICH CONFLICT WITH THE TEMPORARY TRAFFIC CONTROL SIGN LAYOUT SHALL BE COVERED, REMOVED, STORED OR RESET, AOBE. COVERS USED TO COVER PORTIONS OF EXISTING SIGNS SHALL BE OF A COLOR AND REFLECTORIZED MATERIAL MATCHING THAT OF THE SIGN BEING PARTIALLY COVERED. THE CONTRACTOR SHALL BE LIABLE FOR ANY DAMAGE TO SIGNS CAUSED BY THE METHODS USED TO TEMPORARILY REMOVE, RELOCATE OR COVER SIGN PANELS OR SIGN TEXT, AT NO ADDITIONAL COST TO THE TOWN. ALL APPROPRIATE EXISTING SIGNS SHALL BE RESTORED TO THEIR ORIGINAL CONDITION AND/OR LOCATION UNLESS OTHERWISE REPLACED IN THIS CONTRACT.

22. WHEN TWO OR MORE WORK AREAS ARE ADJACENT, OVERLAP, OR ARE IN CLOSE PROXIMITY AS DETERMINED BY THE ENGINEER, THE CONTRACTOR SHALL ENSURE THERE ARE NO CONFLICTING SIGNS AND THAT CONTINUITY IS MAINTAINED THROUGHOUT ALL WORK AREAS.

23. ALL CONSTRUCTION SIGNS SHALL BE MOUNTED ON NCHRP 350 APPROVED TEMPORARY SIGN SUPPORTS UNLESS SHIELDED BY TEMPORARY CONCRETE BARRIER OR GUIDE RAIL, AND LOCATED BEYOND THE DEFLECTION DISTANCES.

24. THE CONTRACTOR SHALL PLACE W8–1 "BUMP" SIGNS, W8–2 "DIP" SIGNS, W8–8 "ROUGH ROAD" SIGNS, W8–11 "UNEVEN LANES" AND/OR W8–15 "GROOVED PAVEMENT" WHERE DIRECTED BY THE ENGINEER. SEE NYS SPECIFICATION 619 BASIC WORK ZONE TRAFFIC CONTROL.

25. SIGNS AT OR NEAR INTERSECTIONS SHALL BE PLACED SO THAT THEY DO NOT OBSTRUCT A MOTORIST'S LINE OF SIGHT.

26. THE LOCATIONS OF THE SIGNS SHOWN ON THE WORK ZONE TRAFFIC CONTROL PLANS AND DETAILS MAY BE ADJUSTED BASED ON SIGHT DISTANCE AND OTHER CONSIDERATIONS. THE FINAL LOCATIONS OF SIGNS ARE SUBJECT TO APPROVAL OF THE ENGINEER.

27. ALL WARNING AND REGULATORY SIGNS SHALL BE POSTED ON BOTH SIDES OF MULTI–LANE DIVIDED HIGHWAYS, MULTI–LANE RAMPS, AND ONE–WAY STREETS. IN CASES WHERE LANE RESTRICTIONS REDUCE THE TRAVEL LANE TO ONE LANE, SIGNS SHALL BE POSTED ON THE RIGHT SIDE OF THE ACTIVE TRAVEL LANE, UNLESS OTHERWISE AUTHORIZED BY THE ENGINEER.

28. SIGNS MOUNTED ON THE MEDIAN OF DIVIDED HIGHWAYS WHERE MEDIAN BARRIER IS IN PLACE MAY BE MOUNTED ON THE BARRIER WITH A SADDLE TYPE BRACKET. LAYING THE SIGN DOWN IN A HORIZONTAL POSITION IS NOT PERMITTED.

29. THE DIMENSIONS OF WORK ZONE TRAFFIC CONTROL SIGNS ARE DESCRIBED IN THE MUTCD. ANY CHANGES TO THE DIMENSIONS SHALL BE APPROVED BY THE RESIDENT ENGINEER.

30. THE NYR9–11 "LICENSE SUSPENDED AFTER TWO WORK ZONE SPEEDING TICKETS" SIGN SHALL BE PLACED IN ADVANCE OF WORK ZONES NOT HAVING A REDUCED REGULATORY SPEED LIMIT. THE NYR9–12 "FINES DOUBLED FOR SPEEDING IN WORK ZONE" SIGN SHALL BE POSTED IN ADVANCE OF WORK ZONES HAVING A REDUCED REGULATORY SPEED LIMIT.

31. THE CONTRACTOR SHALL ERECT W20–1 'ROAD WORK AHEAD" SIGN IN ADVANCE OF INTERSECTING CROSS STREETS OR ENTERING RAMPS WITHIN THE PROJECT LIMITS. PAYMENT FOR THESE SIGNS SHALL BE MADE UNDER ITEM 619.01 FOR BASIC WORK ZONE TRAFFIC CONTROL.

32. SIGN PANELS SHALL MEET THE REFLECTIVE SHEETING REQUIREMENTS AS OUTLINED IN NYS STANDARD SPECIFICATION 619 BASIC WORK ZONE TRAFFIC CONTROL.

33. AS PER SECTION 6F–02 OF NATIONAL MUTCD, ALL SIGNS USED AT NIGHT SHALL BE ETHER RETROREFLECTIVE WITH A MATERIAL THAT HAS A SMOOTH, SEALED OUTER SURFACE, OR ILLUMINATED TO SHOW THE SAME SHAPE AND SIMILAR COLOR BOTH DAY AND NIGHT. THE REQUIREMENT FOR SIGN ILLUMINATION SHALL NOT BE CONSIDERED TO BE SATISFIED BY STREET, HIGHWAY OR STROBE LIGHTING.

BARRIER/SHADOW VEHICLES:

34. BARRIER AND SHADOW VEHICLES SHALL BE REQUIRED AND POSITIONED AS PER STANDARD SHEET TITLED "WORK ZONE TRAFFIC CONTROL LEGENDS AND NOTES" AND NYS STANDARD SPECIFICATION 619, COST INCLUDED IN THE UNIT BID PRICE FOR BASIC WORK ZONE TRAFFIC CONTROL.

35. NO WORK ACTIVITY, EQUIPMENT, VEHICLES AND/OR MATERIALS SHALL BE LOCATED BETWEEN THE BARRIER OR SHADOW VEHICLE AND THE ACTIVE WORK AREA (ROLL AHEAD DISTANCE).

36. THE CONTRACTOR MAY BE REQUIRED TO PROVIDE A BARRIER VEHICLE IN CONJUNCTION WITH POLICE PRESENCE IN THE WORK ZONE, TO BE INCLUDED IN THE UNIT BID PRICE FOR BASIC WORK ZONE TRAFFIC CONTROL.

PUBLIC ACCESS:

37. ACCESS TO RESIDENTIAL AND COMMERCIAL DRIVEWAYS SHALL BE MAINTAINED AT ALL TIMES, UNLESS OTHER AGREEMENTS, SUITABLE TO THE OWNERS, CAN BE MADE. THE CONTRACTOR SHALL NOTIFY PROPERTY OWNERS WHOSE DRIVEWAYS WILL BE MADE INACCESSIBLE AT LEAST 24 HOURS PRIOR TO RESTRICTING USE OF THE DRIVE. FOR MULTIPLE ACCESS PROPERTIES, ONLY ONE DRIVEWAY MAY BE CLOSED AT ONE TIME. ACCESS SHALL BE RESTORED TO ALL DRIVEWAYS AS SOON AS POSSIBLE.

38. SUITABLE RAMPS SHALL BE INSTALLED TO MAINTAIN SMOOTH TRANSITIONS FROM RESIDENTIAL AND COMMERCIAL DRIVEWAYS TO AND FROM THE WORK AREA. THE MATERIAL SHALL CONSIST OF CRUSHED STONE OR ASPHALT CONCRETE; WHICHEVER IS DEEMED MORE APPROPRIATE FOR THE CIRCUMSTANCES, AOBE. PLASTIC DRUMS OR OTHER APPROVED TRAFFIC CONTROL DEVICES SHALL BE USED TO DELINEATE THE DRIVEWAY AND TO CONTROL ACCESS DURING NON–WORKING HOURS.

39. ACCESS TO ALL PROPERTIES AND CROSS STREETS SHOULD BE MAINTAINED AT ALL TIMES DURING CONSTRUCTION. SEE NYS STANDARD SPECIFICATION 619.

CHANNELIZING DEVICE:

40. WHEN CONES AND/OR DRUMS ARE USED IN CONTROLLING THE MOVEMENT OF TRAFFIC THROUGH WORK AREAS, THE CONTRACTOR SHALL TAKE STEPS AS NECESSARY TO PREVENT THE CONES AND/OR DRUMS FROM BEING BLOWN OVER OR DISPLACED BY PASSING VEHICLES. THE CONTRACTOR SHALL ACCOMPLISH THIS BY DOUBLING CONES, BY THE USE OF SAND BAG RINGS, OR BY OTHER SUCH MEANS AS MAY BE APPROVED BY THE ENGINEER WHICH SHALL PRESENT NO HAZARD TO MOTORISTS OR TO WORKERS IF CONES AND/OR DRUMS ARE STRUCK. CONES SHALL NOT BE USED FOR NON–WORKING HOUR CLOSURES, NOR AT ANY TIME TO SEPARATE LANES OF TRAFFIC MOVING IN THE SAME DIRECTION.

41. WHERE NECESSARY, OR AS REQUIRED BY THE ENGINEER, THE CONTRACTOR SHALL UTILIZE FLAGGERS AT DRIVEWAYS TO CONTROL TRAFFIC ENTERING THE TRAVEL WAY.

42. DEFORMED OR DAMAGED CHANNELIZING DEVICES THAT DO NOT MAINTAIN APPEARANCE, COLOR AND REFLECTIVITY WILL BE EVALUATED FOR ACCEPTABILITY IN ACCORDANCE WITH THE AMERICAN TRAFFIC SAFETY SERVICES ASSOCIATION (ATSSA) "QUALITY GUIDELINES FOR WORK ZONE TRAFFIC CONTROL DEVICES." AS THE CONDITION OF DEVICES DETERIORATES OVER TIME, THOSE THAT FALL BELOW THE MARGINAL CATEGORY SHALL BE REPLACED.

43. WHERE POSSIBLE ALL CHANNELIZING AND GUIDING DEVICES ARE TO BE PLACED SO AS TO PROVIDE A MINIMUM 2' LATERAL CLEARANCE TO THE TRAVELED WAY.

44. THE TYPE AND SPACING BETWEEN CHANNELIZING DEVICES SHALL MEET THE CRITERIA AS OUTLINED IN NYS STANDARD SPECIFICATION 619.01 BASIC WORK ZONE TRAFFIC CONTROL.

SNOW/ICE REMOVAL:

45. PROVISION FOR SNOW AND ICE REMOVAL OPERATIONS: IN ORDER TO ALLOW FOR SNOW AND ICE CONTROL BY TOWN FORCES ON TOWN HIGHWAYS AND BY LOCAL MUNICIPALITIES ON LOCAL ROADS, THE CONTRACTOR SHALL SCHEDULE HIS WORK IN ACCORDANCE WITH THE FOLLOWING:

A. INTERFERENCE WITH SNOW PLOWING OPERATIONS BY DRUMS, BARRICADES, AND OTHER TRAFFIC CONTROL EQUIPMENT SHALL BE KEPT TO A MINIMUM. ANY DEVICES DISTURBED OR DAMAGED BY SNOW AND ICE CONTROL OPERATIONS SHALL BE REPLACED AND/OR RESET AS NECESSARY AND AS SOON AS POSSIBLE BY THE CONTRACTOR.

B. DRAINAGE FRAMES, GRATES, AND COVERS AND OTHER CASTINGS SHALL NOT BE ADJUSTED IN A TRAVEL LANE UNLESS THE FINAL PAVEMENT COURSE IS TO BE PLACED PRIOR TO THE ONSET OF SNOW AND ICE WEATHER. STEEL PLATES, ETC. SHALL NOT PROTRUDE ABOVE THE ADJACENT PAVEMENT. IF ANY OF THESE PROTRUSIONS EXIST IN A NON–TRAVEL LANE PRIOR TO A SNOW AND ICE CONDITION, THEN TEMPORARY ASPHALT RAMPS MUST BE PLACED SO THAT FOR EVERY 1 INCH OF RISE, THERE IS A 80 INCH RUN OF RAMP.

C. ALL PAVEMENT CUTS SHALL BE RESTORED TO THE ADJACENT PAVEMENT GRADE TO ELIMINATE RECESSED AREAS WHERE SNOW CANNOT BE PLOWED OR WHERE THE PLOWS MAY SNAG.

WARNING LIGHTS:

46. IN AREAS WHEN THERE IS A LONG TERM LANE SHIFT, LANE MERGE, LANE CLOSURE, ROAD CLOSURE OR OTHER POTENTIALLY HAZARDOUS AREAS, TYPE B WARNING LIGHTS SHALL BE USED TO WARN ROAD USERS DURING DAYTIME AND NIGHTTIME HOURS.

47. PER NYS STANDARD SPECIFICATION 619 ONE(1) TYPE A FLASHING WARNING LIGHT SHALL BE INSTALLED ON THE LAST CHANNELIZING DEVICE IN EACH SERIES OF A NIGHTWORK SHOULDER OR TRAVEL LANE CLOSURE. ONE(1) TYPE A FLASHING WARNING LIGHT SHALL BE INSTALLED ON CHANNELIZING DEVICES USED TO MARK THE LOCATION OF HAZARDS IN, OR ADJACENT TO THE TRAVEL LANE.

48. FOR NIGHTTIME WORK ONLY, TYPE B WARNING LIGHTS MAY BE MOUNTED ON ADVANCED WARNING SIGNS.

PEDESTRIANS/BICYCLISTS:

49. THE CONTRACTOR SHALL PROVIDE, DELINEATE AND MAINTAIN A CLEAR TRAVEL PATH FOR PEDESTRIANS AND BICYCLISTS EITHER THROUGH OR AROUND WORK ZONES FOR THE DURATION OF THIS PROJECT, IN ACCORDANCE WITH THE CONTRACT DOCUMENTS. THE TRAVEL PATH SHALL COMPLY WITH THE PROVISIONS OF THE ADA GUIDELINES, MUTCD AND NYS SUPPLEMENT AS APPLICABLE. THE CONTRACTOR MAY UTILIZE ANY COMBINATION OF THE FOLLOWING TO PROVIDE THE USABLE TRAVEL PATH: EXISTING SIDEWALKS/SHOULDERS; TEMPORARY SIDEWALKS/SHOULDERS; FINAL SIDEWALKS/SHOULDERS; AND EXISTING OR TEMPORARY SIDEWALK CURB RAMPS. THE USABLE TRAVEL PATH SHALL BE CLEARLY MARKED AND STAGED BETWEEN INTERSECTING ROADS TO ENSURE SAFE PEDESTRIAN CROSSING AND ACCESSIBILITY. PEDESTRIAN ACCESS TO RESIDENTIAL AND COMMERCIAL PROPERTIES SHALL BE MAINTAINED FOR THE DURATION OF CONSTRUCTION. SEE NYS STANDARD SPECIFICATION 619 BASIC WORK ZONE TRAFFIC CONTROL, INCLUDING NYSDOT STANDARD SHEETS 619–50 AND 619–51. PAYMENT FOR THIS WORK SHALL BE MADE UNDER THE UNIT PRICE BID FOR ITEM 619.01. TEMPORARY ASPHALT CAN BE UTILIZED TO MAINTAIN PEDESTRIAN ACCESS ROUTES. PAYMENT FOR THIS TEMPORARY ASPHALT SHALL BE MADE UNDER THE UNIT PRICE BID FOR ITEM 619.01.

50. THE CONTRACTOR SHALL CONDUCT WORK OPERATIONS TO MINIMIZE THE INTERRUPTION OF PEDESTRIAN TRAFFIC. THE TEMPORARY STORAGE OF CONSTRUCTION EQUIPMENT OR MATERIALS SHALL NOT BE PERMITTED ON ANY USABLE TRAVEL PATH THAT IS OPEN TO PEDESTRIAN TRAFFIC.

PROJECT SPECIFIC NOTES:

51. THE TOWN OF BABYLON WILL DETERMINE WHEN LANE CLOSURES AND LANE SHIFTS WILL BE PERMITTED. THESE TIMES MAY BE REDUCED BY THE ENGINEER IN CHARGE AT ANY LOCATION, AT ANY TIME DUE TO TRAFFIC AND SAFETY CONDITIONS

52. THE CONTRACTOR WILL NOT BE PERMITTED TO UTILIZE NIGHTTIME PAVING, LANE CLOSURES, OR LANESHIFTS, UNLESS PRIOR WRITTEN APPROVAL FROM TOWN OF BABYLON IS OBTAINED.

NOTIFICATION/COORDINATION:

53. THE CONTRACTOR MUST NOTIFY THE ENGINEER, THE SUFFOLK COUNTY POLICE DEPARTMENT, BABYLON SCHOOL DISTRICT, THE TOWN OF BABYLON HIGHWAY DEPARTMENT, AREA FIRE DEPARTMENTS, AND EMERGENCY SERVICES OF ALL DETOURS, PROPOSED STREET CLOSINGS, OR ANY WORK THAT MIGHT AFFECT THE MOBILITY OR ACCESS OF THE FIRE OR POLICE DEPARTMENT 72 HOURS IN ADVANCE OF THEIR IMPLEMENTATION. IN ADDITION, THE CONTRACTOR SHALL ENSURE THAT HYDRANTS AND ALARM BOXES ARE KEPT CLEAR AND AVAILABLE. PAYMENT FOR THE VMS SIGNS WILL BE MADE UNDER ITEM 619.01.

ADVANCE SIGNING:

54. THE CONTRACTOR SHALL SUPPLY AND OPERATE TWO (2) VMS APPROACHING THE PROJECT LIMITS (ONE IN EACH DIRECTION) ON LOCUST AVENUE AND PHELPS LANE. VMS SHALL BE OPERATIONAL TWO (2) WEEKS PRIOR TO THE START OF CONSTRUCTION AND MAINTAINED THROUGHOUT THE COURSE OF THE PROJECT, A.O.B.E, AND TWO (2) WEEKS PRIOR TO MILLING AND PAVING OPERATIONS.

55. IN ADDITION TO THE ADVANCED SIGNING SHOWN ON THE PLANS AND STANDARD DETAIL SHEETS, THE CONTRACTOR SHALL ERECT W20–1, "ROAD WORK AHEAD" SIGNS IN ADVANCE OF ANY MAJOR INTERSECTING CROSS STREETS OR ENTERING RAMPS WITHIN THE CONTRACT LIMITS, A.O.B.E. THE CONTRACTOR SHALL ALSO ERECT NYR9–11 "LICENCE SUSPENDED" IN ADVANCE OF THE PROJECT LIMITS AND AT APPROPRIATE DISTANCES WITHIN PROJECT PROJECT LIMITS (DISTANCES OF AT LEAST THE PRECONSTRUCTION SPEED LIMIT X 100). G20–2C, "END ROAD WORK" SIGNS SHALL BE LOCATED AT THE END OF WORK ZONES. PAYMENT FOR THESE SIGNS WILL BE MADE UNDER ITEM 619.01 FOR BASIC WORK ZONE TRAFFIC CONTROL.

56. FOR ADVANCED SIGNING SPACING REFER TO TABLE NY6H–3 FOR NYS STANDARD SHEET 619–11.

57. ROAD WORK NEXT 1/2 MILE SHALL BE ERECTED PRIOR TO THE PROJECT LIMIT FOR PROJECTS IN EXCESS OF 2 MILES OR A.O.B.E.

TAPER LENGTHS, SIGN SPACING, BUFFER SPACE AND VEHICLE PLACEMENT:

58. THE CONTRACTORS ATTENTION IS DIRECTED TO NYS STANDARD SHEET 619–11 TO CALCULATE TAPER LENGTHS, SIGN SPACING, BUFFER SPACE AND VEHICLE PLACEMENT. FOR REFERENCE AND PURPOSES OF USING THESE TABLES, USE THE PRECONSTRUCTION 85TH PERCENTILE SPEED, NOT THE PRECONSTRUCTION SPEED LIMIT AS SHOWN ON THE TABLES.

WORK ZONE SPEED LIMIT:

59. IF A REGULATORY SPEED REDUCTION IS NOT REQUIRED, ADDITIONAL R2–1 "SPEED LIMIT SIGNS" MAY BE INSTALLED WITHIN THE WORK ZONE DISPLAYING THE PRECONSTRUCTION SPEED LIMIT, A.O.B.E., EXISTING SPEED LIMIT SIGNS SHALL BE MAINTAINED DURING THE COURSE OF THE PROJECT IF REMOVED ADDITIONAL SPEED LIMIT SIGNS SHALL BE INSTALLED.

DESIGNED BY: _____

CHECKED BY: _____

DRAWN BY: _____

COMPARED BY: _____

SYMBOL	DESCRIPTION	APPROVED	DATE

REVISIONS

NV5
40 MARCUS DRIVE, SUITE 201
MELVILLE, NEW YORK 11747
P: 631.891.3200 WWW.NV5.COM

CARLLS RIVER WATERSHED PROJECT
DRAFT PROGRESS PLANS

WORK ZONE TRAFFIC CONTROL PLAN
LOCATION #1 – SUNRISE HIGHWAY
(NYS RT27)

PROJECT NO.	SCALE	DWG. NO	SHEET NO.
728518–0000340	1"=200'	WZTC–01	11 OF 19

S:\Project\728518-0000340.00-Carlls River Watershed Design Project\Technical\Cadd\Plan Sheets\04-05-WZTC & Staging - Location 1.dwg

STAGING NOTES

STAGE ONE: PROJECT SETUP AND CLEARING AND GRUBBING
1. INSTALL ARROW BOARD AND ADVANCED SIGNAGE FOR RIGHT LANE CLOSURE.
2. PERFORM SURVEY AND CONSTRUCTION LAYOUT.
3. PERFORM CLEARING AND GRUBBING.
   A. THE CONTRACTOR SHALL MARK ANY TREE IDENTIFIED ON THE PLANS FOR REMOVAL AND THE ENGINEER SHALL VERIFY.

STAGE TWO: EXCAVATE AND GRADE WETLAND
1. INSTALL WETLAND COMPONENTS (FOREBAY, WEIRWALLS, ETC...).
2. EXCAVATE AND GRADE WETLAND .
3. INSTALL PIPING.
4. INSTALL PRETREATMENT DEVICE.
5. INSTALL EMERGENCY SPILLWAY.
6. INSTALL RISER STRUCTURE AND WETLAND OVERFLOW.

STAGE THREE: IN-ROAD DRAINAGE INSTALLATION
1. CONTRACTOR WILL SET UP A STATIONARY LANE CLOSURE FOR A DIVIDED HIGHWAY AS PER MUTCD FIGURE 6H-33.
   A. THE CONTRACTOR SHALL PROVIDE TEMPORARY ASPHALT AS DETERMINED BY THE ENGINEER, TO MAINTAIN PEDESTRIAN ACCESS
2. CONTRACTOR WILL INSTALL DRAINAGE STRUCTURES

STAGE FOUR: ROADWAY RESTORATION, SIDEWALK, CURB, DRIVEWAY APRON
1. INSTALL SIDEWALK, CURB, ROADWAY ASPHALT, DRIVEWAY APRON AND TOPSOIL.
   A. SHOULDER CLOSURES SHALL BE PERMITTED AS DETERMINED BY THE ENGINEER. NYSDOT STANDARD SHEET 619-20 SHALL BE FOLLOWED FOR THIS OPERATION.
   B. THE CONTRACTOR SHALL PROVIDE TEMPORARY ASPHALT, AS DETERMINED BY THE ENGINEER, TO MAINTAIN PEDESTRIAN ACCESS AND VEHICULAR TRAFFIC TO DRIVEWAYS.
   C. PEDESTRIAN ACCESS SHALL BE MAINTAINED TO BUSINESSES AND RESIDENTS AT ALL TIMES. IF THE PEDESTRIAN ACCESS ROUTE IS DISRUPTED, A CONVENIENT AND ACCESSIBLE PATH SHALL BE PROVIDED WITH SIDEWALK CLOSURES AND DETOURS AS NEEDED.
   D. TEMPORARY ASPHALT CAN BE UTILIZED TO MAINTAIN PEDESTRIAN ACCESS ROUTES.
2. RESTORE PAVEMENT MARKINGS

DESIGNED BY: _____
CHECKED BY: _____
DRAWN BY: _____
COMPARED BY: _____

SYMBOL	DESCRIPTION	APPROVED	DATE

REVISIONS

NV5
40 MARCUS DRIVE, SUITE 201
MELVILLE, NEW YORK 11747
P: 631.891.3200 WWW.NV5.COM

CARLLS RIVER WATERSHED PROJECT
DRAFT PROGRESS PLANS

STAGING NOTES
LOCATION #1 – SOUTHARDS POND

PROJECT NO.	SCALE	DWG. NO	SHEET NO.
728518-0000340	N/A	SN-01	12 OF 19

S:\Project\728518-0000340.00-Carlls River Watershed Design Project\Technical\Cadd\Plan Sheets\04-05-WZTC & Staging - Location 1.dwg

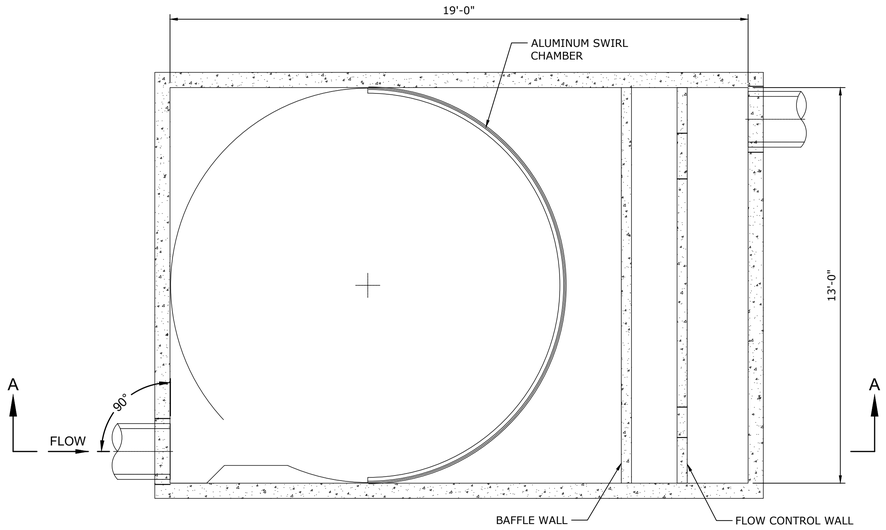

SECTION B-B

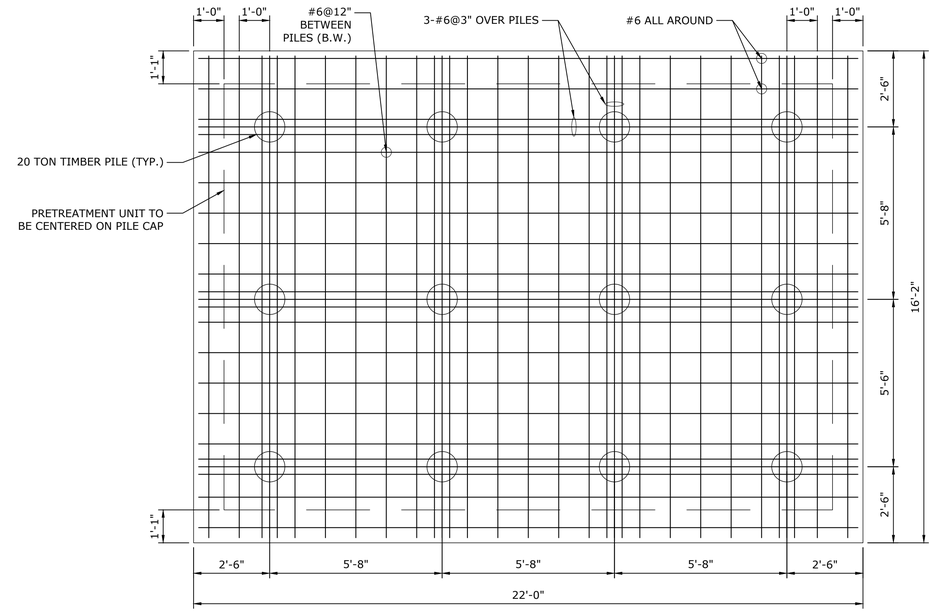

PILE PLAN

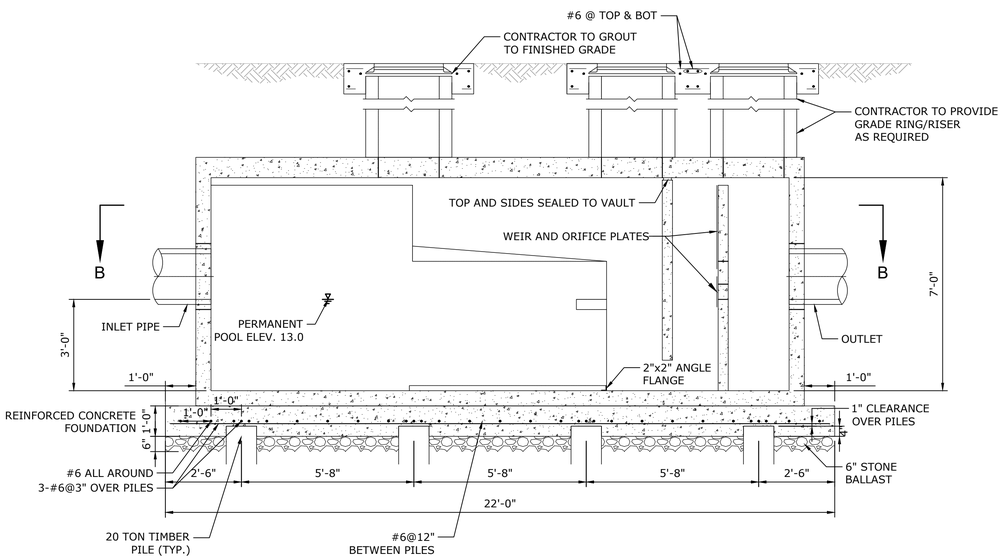

SECTION A-A

1 PRE-TREATMENT DEVICE
N.T.S.

DESIGNED BY: _____
CHECKED BY: _____
DRAWN BY: _____
COMPARED BY: _____

SYMBOL	DESCRIPTION	APPROVED	DATE

REVISIONS

NV5
40 MARCUS DRIVE, SUITE 201
MELVILLE, NEW YORK 11747
P: 631.891.3200 WWW.NV5.COM

CARLLS RIVER WATERSHED PROJECT
DRAFT PROGRESS PLANS

MISCELLANEOUS DETAILS

PROJECT NO.	SCALE	DWG. NO	SHEET NO.
728518-0000340	N/A	MD-01	13 OF 19

S:\Project\728518-0000340.00-Carlls River Watershed Design Project\Technical\Cadd\Plan Sheets\04-07-Miscellaneous Details-Location 1 _1.dwg

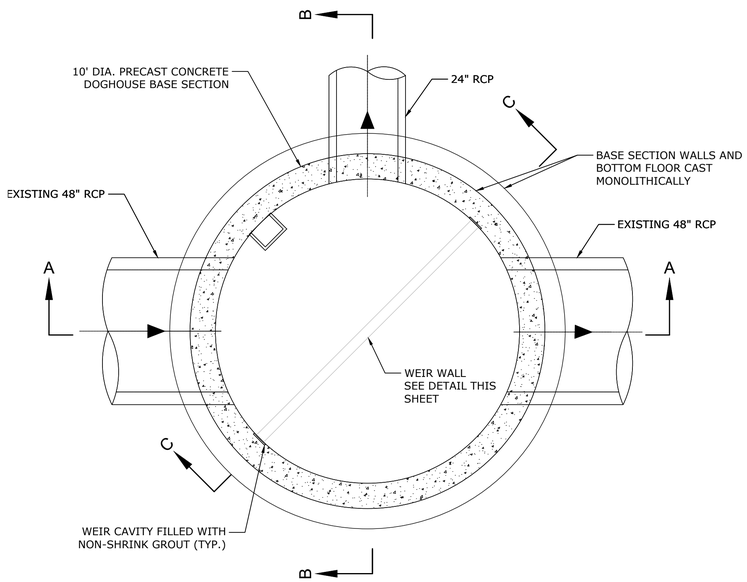

PLAN

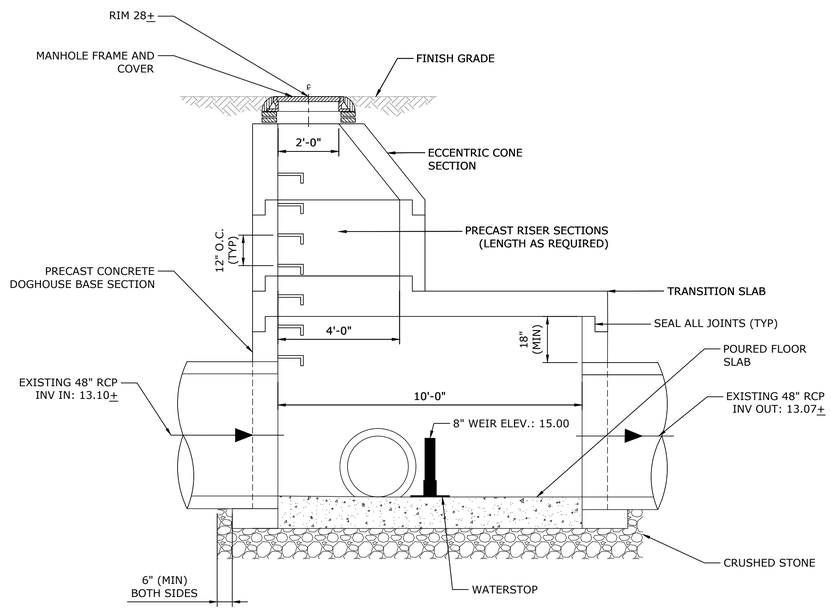

SECTION A-A

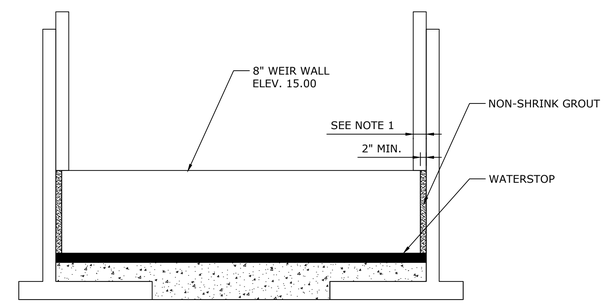

SECTION C-C

NOTES:.

1. WEIR CAPACITY SHALL BE OF SUFFICIENT DIMENSION FOR WEIR WALL TO BE SMOOTHLY INSTALLED INTO BASE SECTION LEAVING A GAP THAT IS MINIMIZED AND COMPATIBLE WITH NON-SHRINK GROUT USED TO FILL THE CAVITY BETWEEN WEIR WALL AND BASE SECTION. NON-SHRINK GROUT SHALL BE 7,000 PSI AND INSTALLED ONCE WEIR WALL HAS BEEN SET IN PLACE.
2. WEIR WALL SHALL BE 4,000 PSI PRECAST CONCRETE WITH TWO NO. 4 SPACED 12" O.C. EACH WAY AND WATER STOP CAST ON THE BOTTOM.

NOTES:.

1. DIVERSION STRUCTURE SHALL BE ORIENTED SUCH THAT FRAME, COVER, AND MANHOLE STEPS ARE LOCATED ENTIRELY WITHIN THE EXISTING SIDEWALK AREA.
2. AT A MINIMUM, REINFORCEMENT FOR PRECAST SECTIONS SHALL CONFORM TO NYSDOT STANDARDS FOR PRECAST DRAINAGE STRUCTURES.
3. EXISTING STORM SEWER SHALL REMAIN INTACT AND IN SERVICE DURING CONSTRUCTION OF DIVERSION STRUCTURE UNTIL THE PROPOSED WEIR WALL IS TO BE INSTALLED. WEIR WALL SHALL BE INSTALLED AND COMPLETED DURING DRY WEATHER ONLY.
4. CONTRACTOR SHALL FULLY SUPPORT EXISTING STORM SEWER DURING EXCAVATION AROUND AND UNDER SEWER, DURING PLACEMENT AND COMPACTION OF STONE BELOW DIVERSION STRUCTURE AND EXISTING SEWER, AND DURING PLACEMENT AND CURING OF POURED FLOOR SLAB.
5. CONTRACTOR SHALL CLEANLY SAW CUT EXISTING STORM SEWER WITHIN 2" (MAX) OF INSIDE FACE OF DIVERSION STRUCTURE.
6. AFTER COMPLETION OF THE DIVERSION STRUCTURE, INCLUDING THE WEIR WALL, CONTRACTOR SHALL INSTALL PLUG IN PROPOSED 24" STORM SEWER TO PREVENT FLOW FROM ENTERING PROPOSED WETLAND UNTIL AFTER THE VEGETATION ESTABLISHMENT PERIOD. AFTER THE VEGETATION ESTABLISHMENT PERIOD, CONTRACTOR SHALL REMOVE PLUG FROM 24" STORM SEWER.
7. CONTRACTOR SHALL VERIFY CENTERLINE AND INVERT ELEVATION OF EXISTING 48" RCP IN FIELD AT THE LOCATION OF THE DIVERSION STRUCTURE SHOWN ON THE PLANS AND SHALL INFORM ENGINEER OF FINDINGS PRIOR TO EXCAVATION.

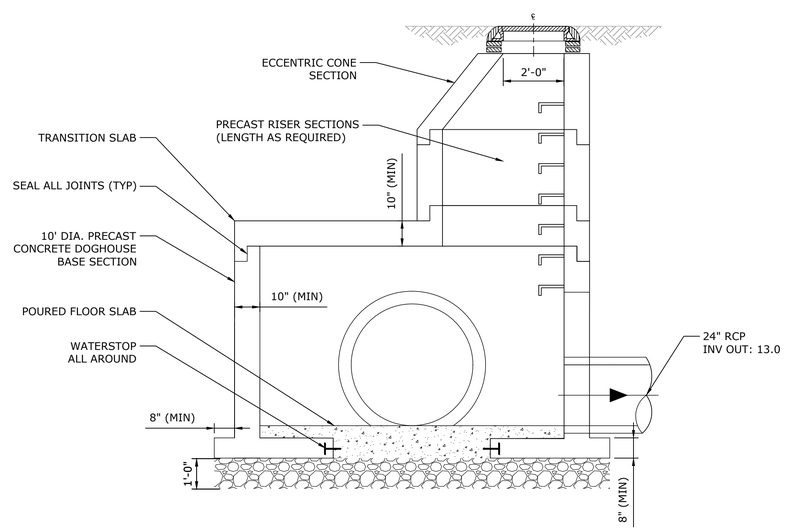

SECTION B-B

1 DIVERSION STRUCTURE
N.T.S.

DESIGNED BY: _____
CHECKED BY: _____
DRAWN BY: _____
COMPARED BY: _____

SYMBOL	DESCRIPTION	APPROVED	DATE
	R E V I S I O N S		

NV5
40 MARCUS DRIVE, SUITE 201
MELVILLE, NEW YORK 11747
P: 631.891.3200 WWW.NV5.COM

CARLLS RIVER WATERSHED PROJECT
DRAFT PROGRESS PLANS

MISCELLANEOUS DETAILS

PROJECT NO.	SCALE	DWG. NO	SHEET NO.
728518-0000340	N/A	MD-02	14 OF 19

S:\Project\728518-0000340.00-Carlls River Watershed Design Project\Technical\Cadd\Plan Sheets\04-07-Miscellaneous Details-Location 1 -1.dwg

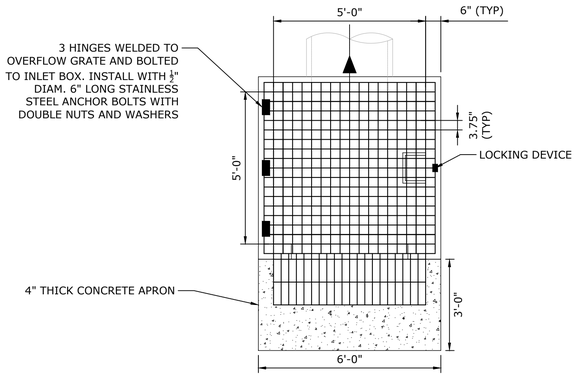

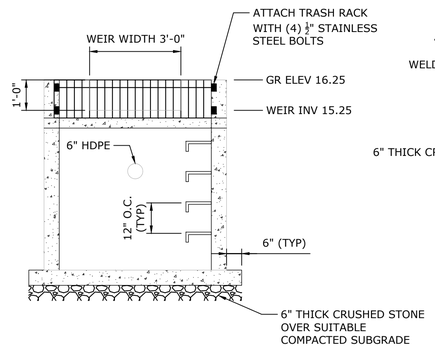

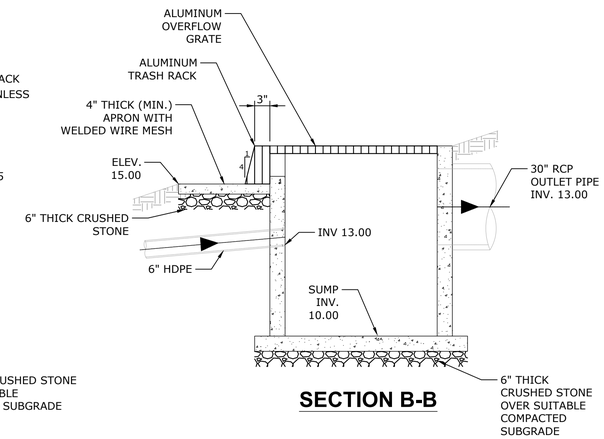

SECTION B-B

1 RISER STRUCTURE
N.T.S.

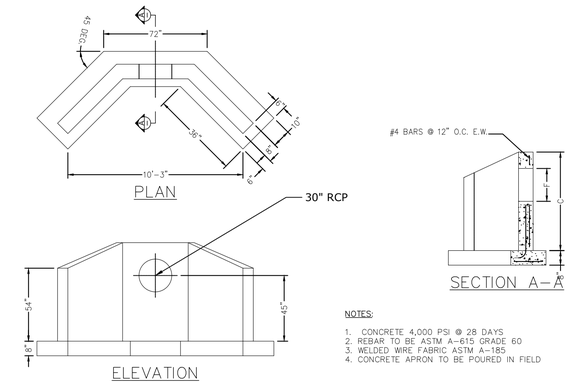

NOTES:

1. CONCRETE 4,000 PSI @ 28 DAYS
2. REBAR TO BE ASTM A-615 GRADE 60
3. WELDED WIRE FABRIC ASTM A-185
4. CONCRETE APRON TO BE POURED IN FIELD

2 CONCRETE HEADWALL
N.T.S.

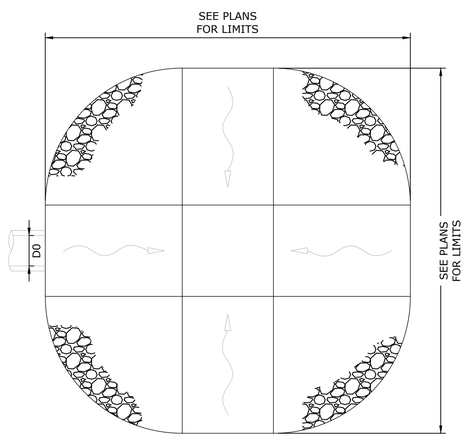

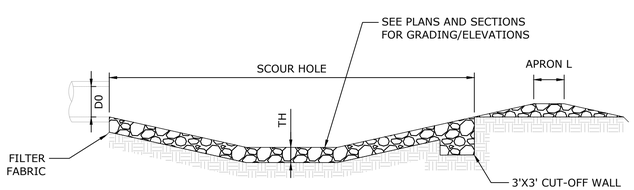

RIPRAP SCOUR HOLE AND APRON	D0	D50	TH	L
NO. 1	2'-0"	0'-6"	1'-0"	SEE FOREBAY SPILLWAY DETAIL
NO. 2	2'-6"	0'-9"	1'-6"	2'-6"

3 RIPRAP SCOUR HOLE AND APRON
N.T.S.

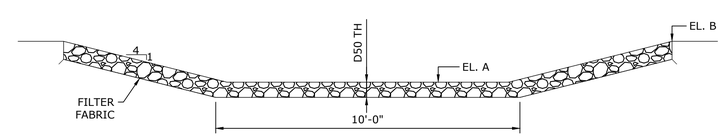

SPILLWAYS

SPILLWAY	D50	TH	EL. A	EL. B
FOREBAY SPILLWAY	0'-6"	1'-0"	13.25	13.5
EMERGENCY SPILLWAY	1'-0"	2'-0"	17	18.5

4 SPILLWAYS
N.T.S.

DESIGNED BY: _____
CHECKED BY: _____
DRAWN BY: _____
COMPARED BY: _____

SYMBOL	DESCRIPTION	APPROVED	DATE

REVISIONS

NV5
40 MARCUS DRIVE, SUITE 201
MELVILLE, NEW YORK 11747
P: 631.891.3200 WWW.NV5.COM

CARLLS RIVER WATERSHED PROJECT
DRAFT PROGRESS PLANS

MISCELLANEOUS DETAILS

PROJECT NO.	SCALE	DWG. NO	SHEET NO.
728518-0000340	N/A	MD-03	15 OF 19

S:\Project\728518-0000340.00-Carlls River Watershed Design Project\Technical\Cadd\Plan Sheets\04-07-Miscellaneous Details-Location 1 -1.dwg

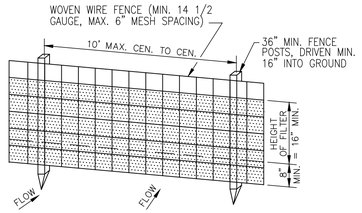

PERSPECTIVE VIEW

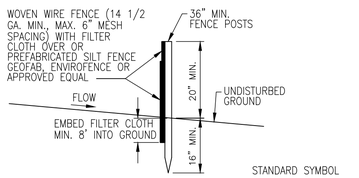

SECTION

CONSTRUCTION NOTES FOR FABRICATED SILT FENCE

1. WOVEN WIRE FENCE TO BE FASTENED SECURELY TO FENCE POSTS WITH WIRE TIES OR STAPLES.
2. FILTER CLOTH TO BE FASTENED SECURELY TO WOVEN WIRE FENCE WITH TIES SPACED EVERY 24" AT TOP AND MID SECTION.
3. WHEN TWO SECTIONS OF FILTER CLOTH ADJOIN EACH OTHER THEY SHALL BE OVER-LAPPED BY SIX INCHES AND FOLDED.
4. MAINTENANCE SHALL BE PERFORMED AS NEEDED AND MATERIAL REMOVED WHEN "BULGES" DEVELOP IN THE SILT FENCE.

POSTS: STEEL EITHER T OR U TYPE OR 2" HARDWOOD

FENCE: WOVEN WIRE, 14 1/2 GA. 6" MAX. MESH OPENING

FILTER CLOTH: FILTER X, MIRAFI 100X, STABI-LINKA T140N OR APPROVED EQUAL

PREFABRICATED UNIT: GEOFAB, ENVIROFENCE, OR APPROVED EQUAL

DEFINITION

THE CONTROL OF DUST RESULTING FROM LAND-DISTURBING ACTIVITIES

PURPOSE

TO PREVENT SURFACE AND AIR MOVEMENT OF DUST FROM DISTURBED SOIL SURFACES THAT MAY CAUSE OFF-SITE DAMAGE, HEALTH HAZARDS, AND TRAFFIC SAFETY PROBLEMS

CONDITIONS WHERE PRACTICE APPLIES

ON CONSTRUCTION ROADS, ACCESS POINTS, AND OTHER DISTURBED AREAS SUBJECT TO SURFACE DUST MOVEMENT AND DUST BLOWING WHERE OFF-SITE DAMAGE MAY OCCUR IF DUST IS NOT CONTROLLED.

DESIGN CRITERIA

CONSTURCTION OPERATIONS SHOULD BE SCHEDULED TO MINIMIZE THE AMOUNT OF AREA DISTURBED AT ONE TIME. BUFFER AREAS OF VEGETATION SHOULD BE LEFT WHERE PRACTICAL. TEMPORARY OR PERMAMANENT STABILIZATION MEASURES SHOULD BE INSTALLED. NO SPECIFIC DESIGN CRITERIA IS GIVEN; SEE CONSTRUCTION SPECIFICATIONS BELOW FOR COMMON METHODS OF DUST CONTROL.

CONSTRUCTION SPECIFICATIONS

VEGETATIVE COVER – FOR DISTURBED AREAS NOT SUBJECT TO TRAFFIC; VEGETATION PROVIDES THE MOST PRACTICAL METHOD OF DUST CONTROL. TEMPORARY SEEDING SHALL BE AS FOLLOWS:

A) RYE GRASS (ANNUAL OR PERENNIAL) AT 30 LBS. PER ACRE (0.7LBS/1000SF)

B) CERTIFIED "AROOSTOOK" WINTER RYE (CEREAL RYE) AT 100 LBS. PER ACRE (2.5 LBS/SF)

USE WINTER RYE IF SEEDING IN OCTOBER/NOVEMBER.

MULCH (INCLUDING GRAVEL MULCH) – MULCH OFFERS A FAST EFFECTIVE MEANS OF CONTROLLING DUST.

SPRAY ADHESIVES – EXAMPLES OF SPRAY ADHESIVES FOR USE ON MINERAL SOILS ARE SHOWN IN THE FOLLOWING TABLE:

MATERIAL	WATER DILUTION	NOZZLE TYPE	APPLY GALLONS/ACRE
ACRYLIC POLYMER	8:1	COURSE SPRAY	500
LATEX EMULSION	12.5:1	FINE SPRAY	235
RESIN IN WATER	4:1	FINE SPRAY	300

WATER QUALITY SHOULD BE CONSIDERED WHEN MATERIALS ARE SELECTED FOR DUST CONTROL

SPRINKLING – THE SITE MAY BE SPRAYED UNTIL THE SURFACE IS WET. THIS IS ESPECIALLY EFFECTIVE ON HAUL ROADS AND ACCESS ROUTES.

STONE USED FOR CONSTRUCTION ROADS IS ALSO EFFECTIVE FOR DUST CONTROL

BARRIERS – A FENCE OR SIMILAR BARRIER CAN CONTROL AIR CURRENTS AT INTERVALS EQUAL TO FIFTEEN TIMES THE BARRIER HEIGHT. PRESERVE EXISTING WIND BARRIER VEGETATION AS MUCH AS PRACTICAL.

MAINTENANCE

MAINTAIN DUST CONTROL MEASURES THROUGH DRY WEATHER PERIODS UNTIL ALL DISTURBED AREAS ARE STABILIZED.

1 SILT FENCE DETAIL
N.T.S.

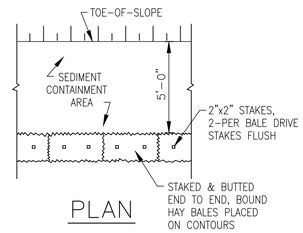

PLAN

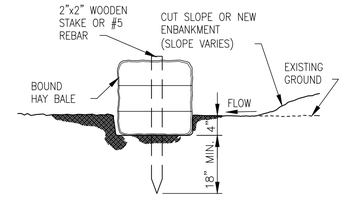

BEDDING DETAIL

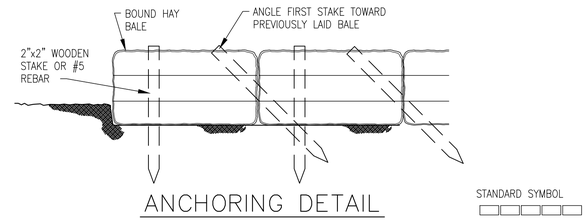

ANCHORING DETAIL

2 HAYBALE DETAIL
N.T.S.

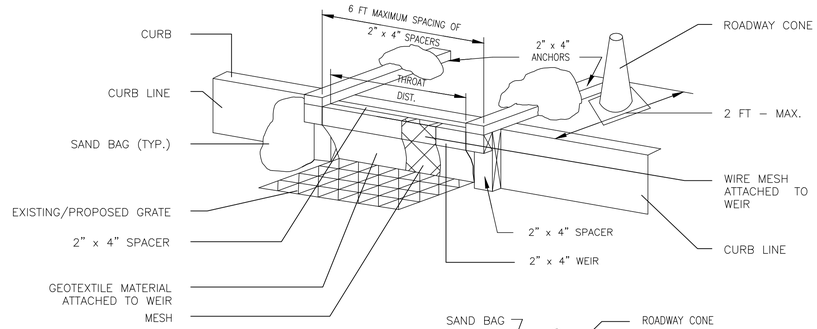

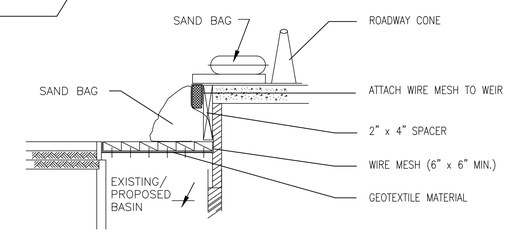

3 DRAINAGE STRUCTURES PROTECTION
N.T.S.

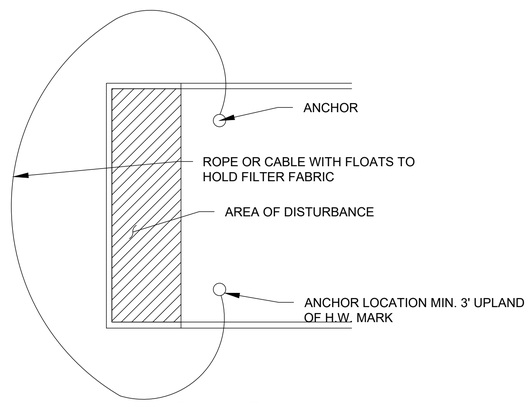

PLAN VIEW

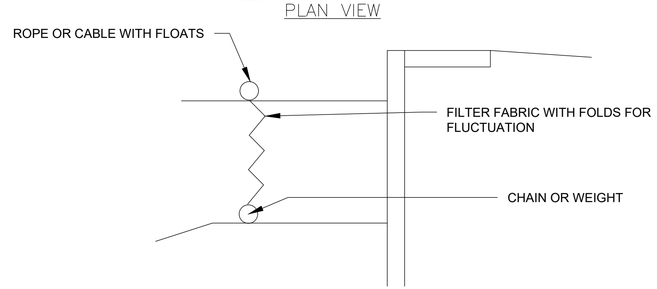

DISTANCE NECESSARY TO MAINTAIN STRUCTURAL INTEGRITY OF CURTAIN

SECTION VIEW

4 TURBIDITY CURTAIN
N.T.S.

PROFILE

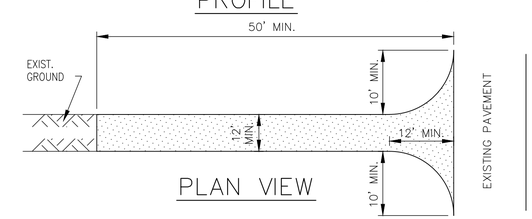

PLAN VIEW

1. STONE SIZE – USE 2" STONE, OR RECLAIMED OR RECYCLED CONCRETE EQUIVALENT.
2. LENGTH – NOT LESS THAN 50 FEET
3. THICKNESS – NOT LESS THAN SIX (6) INCHES.
4. WIDTH – TWELVE (12) FOOT MINIMUM, BUT NOT LESS THAN THE FULL WIDTH AT POINTS WHERE INGRESS OR EGRESS OCCURS.
5. FILTER CLOTH – WILL BE PLACED OVER THE ENTIRE AREA PRIOR TO PLACING OF STONE.
6. SURFACE WATER – ALL SURFACE WATER FLOWING OR DIVERTED TOWARD CON-STRUCTION ENTRANCES SHALL BE PIPED ACROSS THE ENTRANCE. IF PIPING IS IMPRACTICAL, A MOUNTABLE BERM WITH 5:1 SLOPES WILL BE PERMITTED.
7. MAINTENANCE – THE ENTRANCE SHALL BE MAINTAINED IN A CONDITION WHICH WILL PREVENT TRACKING OR FLOWING OF SEDIMENT ONTO PUBLIC RIGHTS-OF-WAY. ALL SEDIMENT SPILLED, DROPPED, WASHED OR TRACTED ONTO PUBLIC RIGHTS-OF-WAY MUST BE REMOVED IMMEDIATELY.
8. WHEN WASHING IS REQUIRED. IT SHALL BE DONE ON AN AREA STABILIZED WITH STONE AND WHICH DRAINS INTO AN APPROVED SEDIMENT TRAPPING DEVICE.
9. PERIODIC INSPECTION AND NEEDED MAINTENANCE SHALL BE PROVIDED AFTER EACH RAIN.

5 CONSTRUCTION ENTRANCE
N.T.S.

DESIGNED BY: _____

CHECKED BY: _____

DRAWN BY: _____

COMPARED BY: _____

SYMBOL	DESCRIPTION	APPROVED	DATE

REVISIONS

NV5
40 MARCUS DRIVE, SUITE 201
MELVILLE, NEW YORK 11747
P: 631.891.3200 WWW.NV5.COM

CARLLS RIVER WATERSHED PROJECT
DRAFT PROGRESS PLANS

MISCELLANEOUS DETAILS

PROJECT NO.	SCALE	DWG. NO	SHEET NO.
728518-0000340	N/A	MD-04	16 OF 19

S:\Project\728518-0000340.00-Carlls River Watershed Design Project\Technical\Cadd\Plan Sheets\04-07-Miscellaneous Details-Location 1 -1.dwg

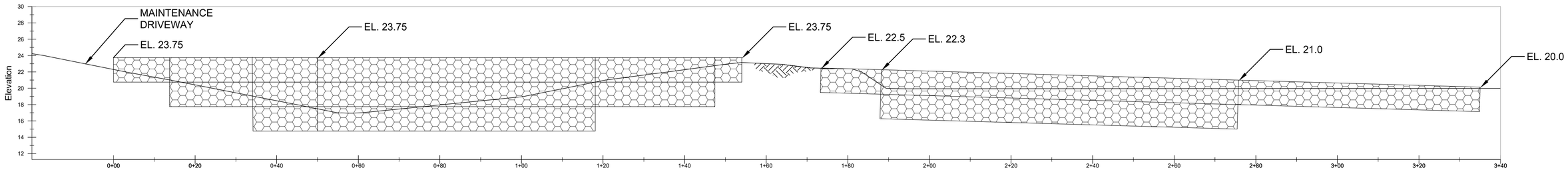

GABION WALL ELEVATION

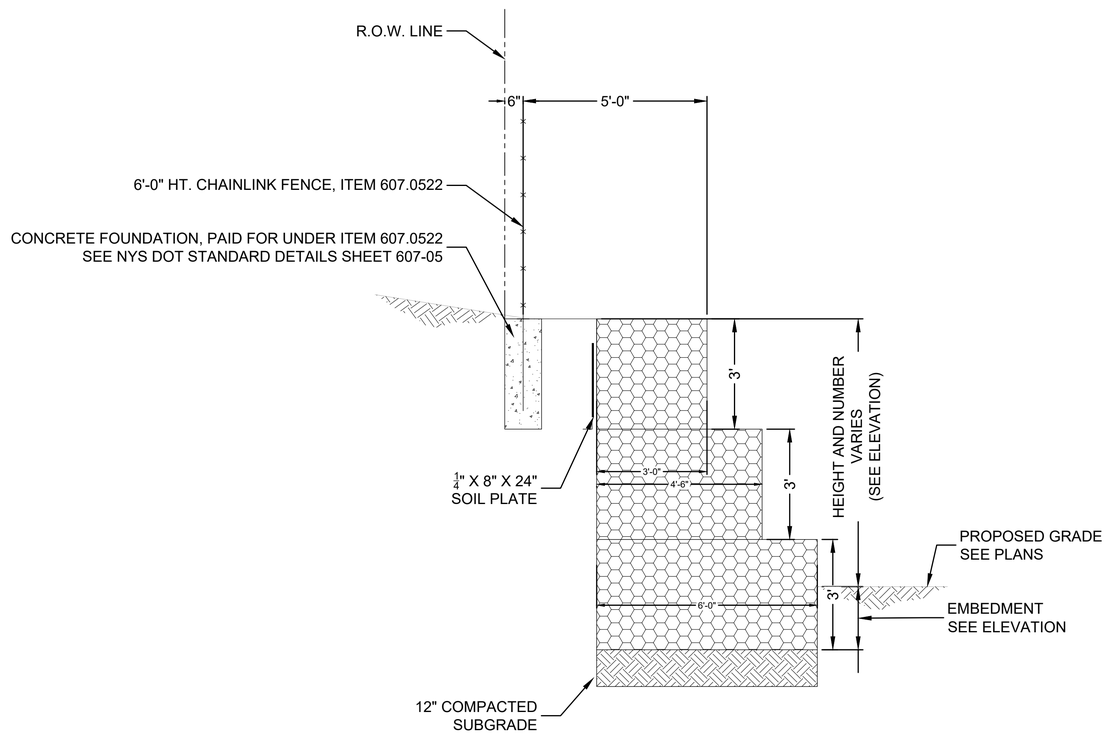

TYPICAL SECTION

1 GABION WALL
N.T.S.

DESIGNED BY: _____
CHECKED BY: _____
DRAWN BY: _____
COMPARED BY: _____

SYMBOL	DESCRIPTION	APPROVED	DATE

REVISIONS

NV5
40 MARCUS DRIVE, SUITE 201
MELVILLE, NEW YORK 11747
P: 631.891.3200 WWW.NV5.COM

CARLLS RIVER WATERSHED PROJECT
DRAFT PROGRESS PLANS

MISCELLANEOUS DETAILS

PROJECT NO.	SCALE	DWG. NO	SHEET NO.
728518-0000340	N/A	MD-07	17 OF 19

S:\Project\728518-0000340.00-Carlls River Watershed Design Project\Technical\Cadd\Plan Sheets\04-07-Miscellaneous Details-Location 1 _2.dwg

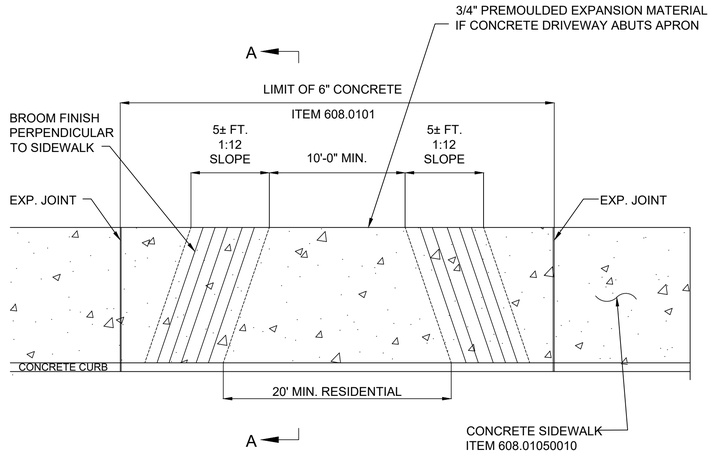

PLAN
N.T.S.

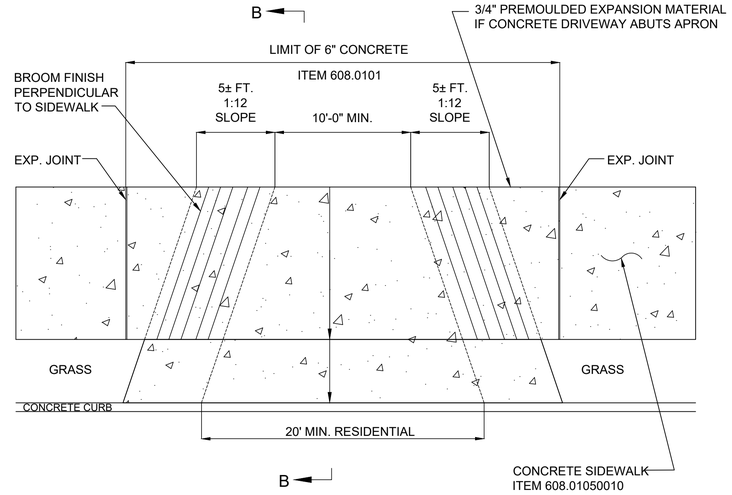

PLAN
N.T.S.

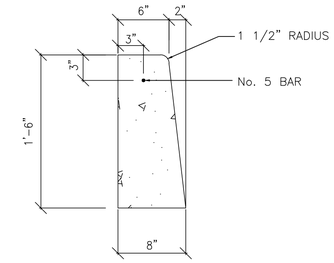

2 CAST-IN-PLACE CONCRETE CURB
N.T.S. (ITEM # 609.04)

NOTE:
1. COST OF REINFORCING INCLUDED IN PRICE BID FOR ITEM 609.04. NO SEPARATE PAYMENT WILL BE MADE FOR REINFORCING.

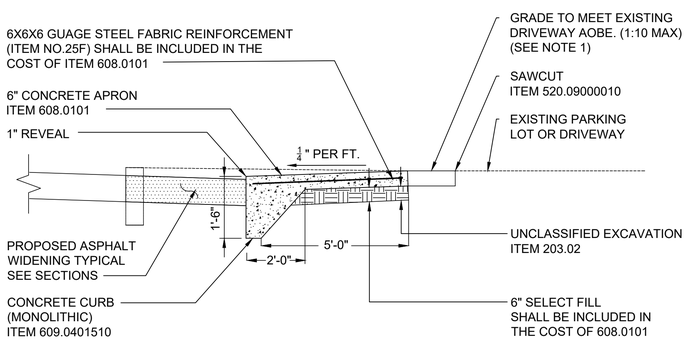

SECTION A-A

DRIVEWAY DETAIL
(SIDEWALK AT CURB)
N.T.S.

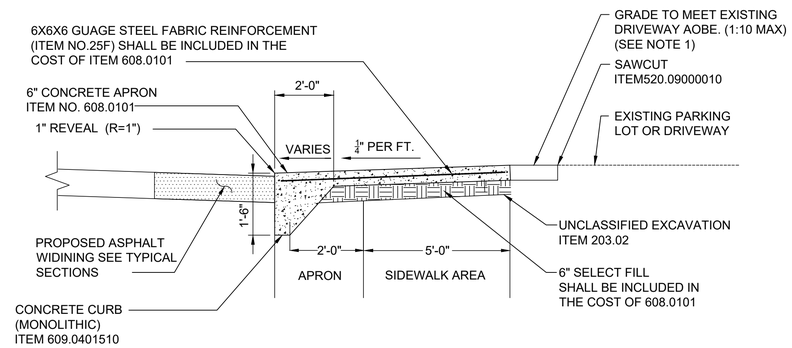

SECTION B-B

DRIVEWAY DETAIL
N.T.S.

1 DRIVEWAY APRON DETAIL
N.T.S. (ITEM # 608.0101)

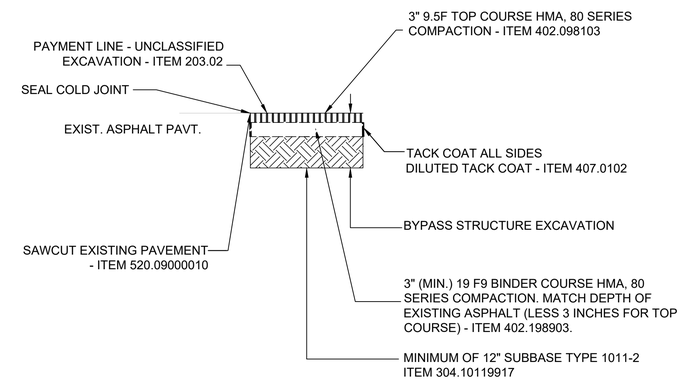

NOTE:
DETAIL IS FOR PAVEMENT RESTORATION IN SUNRISE HIGHWAY.

4 FULL DEPTH PAVEMENT
N.T.S. (ITEM # 608.01050010)

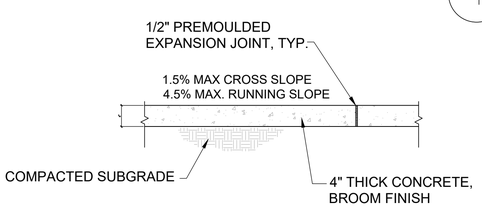

NOTE:
1. SIDEWALK SHALL BE 4" THICK OR AS NOTED ON THE PLANS.
2. CONCRETE SHALL HAVE A MINIMUM COMPRESSIVE STRENGTH OF 4,000 PSI AT 28 DAYS.
3. PROVIDE BITUMINOUS EXPANSION JOINT (1/2" WIDTH PREMOULDED BITUMINOUS FILL) AT CURB LINE AND EVERY 20' AND CONTROL JOINT (1/4" WIDTH X 3/4" DEPTH) EVERY 5'.
4. SIDEWALKS SHALL CONFORM TO CURRENT ADA GUIDELINES.

3 CONCRETE SIDEWALK DETAIL
N.T.S. (ITEM # 608.01050010)

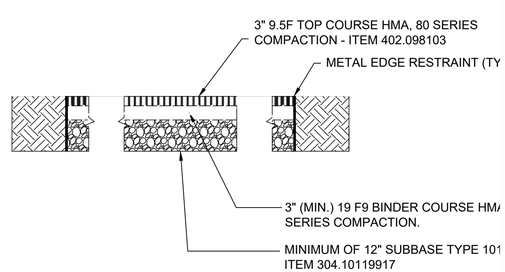

ASPHALT

5 MAINTENANCE DRIVEWAY
N.T.S.

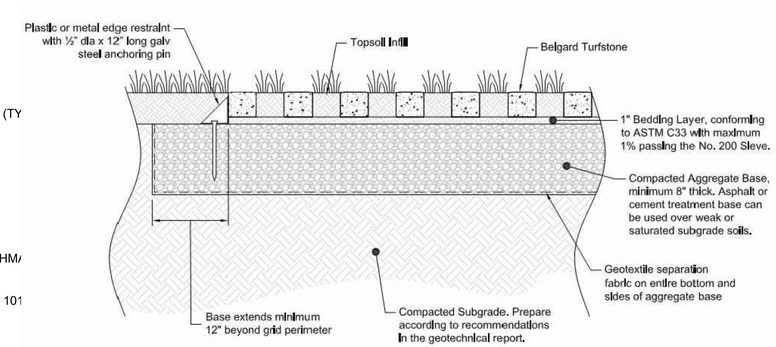

PRECAST CONCRETE GRASS PAVERS

DESIGNED BY: _____
CHECKED BY: _____
DRAWN BY: _____
COMPARED BY: _____

SYMBOL	DESCRIPTION	APPROVED	DATE

REVISIONS

NV5
40 MARCUS DRIVE, SUITE 201
MELVILLE, NEW YORK 11747
P: 631.891.3200 WWW.NV5.COM

CARLLS RIVER WATERSHED PROJECT
DRAFT PROGRESS PLANS

MISCELLANEOUS DETAILS

PROJECT NO.	SCALE	DWG. NO	SHEET NO.
728518-0000340	N/A	MD-06	18 OF 19

S:\Project\728518-0000340.00-Carlls River Watershed Design Project\Technical\Cadd\Plan Sheets\04-07-Miscellaneous Details-Location 1 _3.dwg

PLANT SCHEDULE

CONTOUR	QTY	KEY	BOTANICAL NAME	COMMON NAME	SIZE	NOTES	ITEM #
			DECIDUOUS MAJOR TREES				
	9	NS	NYSSA SYLVATICA VARIBIFLORA	TUPELO	2.5–3" CAL.	B&B, HEAVY	611.0111
	5	PD	POPULOUS DELTOIDES	EASTERN COTTONWOOD	2.5–3" CAL.	B&B, HEAVY	611.0111
	6	QB	QUERCUS BICOLOR	SWAMP WHITE OAK	2.5–3" CAL.	B&B, HEAVY	611.0111
	4	SN	SALIX NIGRA	BLACK WILLOW	2.5–3" CAL.	B&B, HEAVY	611.0111
			CONIFEROUS TREES				
	4	LL	LARIX LATRICINA	LARCH, TAMARACK	2–2.5" CAL.	B&B, HEAVY	611.0311
			DECIDUOUS SHRUBS				
	24	CA	CORNUS AMOMIUM	SILKY DOGWOOD	24–36" HT.	PLANT 48" ON CENTER	611.0411
15.00+	31	CL	CLETHRA ALNIFOLIA	SWEET PEPPERBUSH	24–36" HT.	PLANT 48" ON CENTER	611.0411
	26	CO	CEPAHLANTHUS OCCIDENTALIS	BUTTONBUSH	24–36" HT.	PLANT 48" ON CENTER	611.0411
	34	LB	LINDERA BENZOIN	COMMON SPICE BUSH	24–36" HT.	PLANT 48" ON CENTER	611.0411
	27	PA	PYRUS ARBUTIFOLIA	RED CHOKEBERRY	24–36" HT.	PLANT 48" ON CENTER	611.0411
	27	SC	SAMBUCUS CANADENSIS	ELDERBERRY	24–36" HT.	PLANT 48" ON CENTER	611.0411
	31	VD	VIBURNIUM DENTATUM	ARROWWOOD VIBURNUM	24–36" HT.	PLANT 48" ON CENTER	611.0411
	26	IV	ILLEX VERTICILLATA	WINTERBERRY	10–12' HT.	B&B, HEAVY	611.0511
			HERBACEOUS EMERGENT PLANTS ZONE III				
15.00 TO 13.00	175	CAC	CALAMAGROTIS CANADENSIS	BLUE ZINGER GLAUCOUS SEDGE	#2	18" ON CENTER	611.0711
	200	IRV	IRIS VERSICOLOR	BLUE FLAG IRIS	#2	18" ON CENTER	611.0711
	170	PAV	PANICUM VIRGATUM 'RUBY RIBBONS'	RUBY RIBBONS SWITCH GRASS	#2	18" ON CENTER	611.0711
			HERBACEOUS SUBEMERGENT/EMGERGENT PLANTS ZONE II				
13.00 TO 9.00	125	ELC	ELODEA CANADENSIS	WATERWEED	2" PLUGS	2' ON CENTER	611.0711
	120	SAL	SAGGITARIA LATIFOLIA	DUCK POTATO	2" PLUGS	2' ON CENTER	611.0711
	165	SCT	SCHOENOPLECTUS TABERNAEMONTANII	SOFT–STEM BULRUSH	2" PLUGS	2' ON CENTER	611.0711
	595	TYL	TYPHA LATIFOLIA	BROAD–LEAF CATTAIL	2" PLUGS	2' ON CENTER	611.0711
			HERBACEOUS SUBEMERGENT PLANTS ZONE I				
9.00	490	VAA	VALISNERIA AMERICANA	WILD CELERY	2" PLUGS	2' ON CENTER	611.0711
	380	NUL	NUPHAR LUTEUM	SPADDERDOCK	2" PLUGS	2' ON CENTER	611.0711

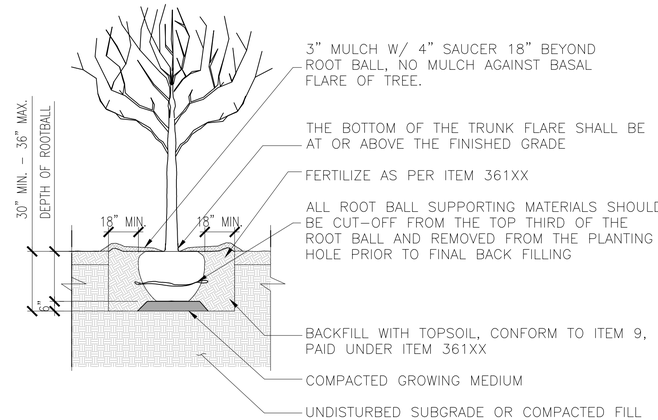

1 PLANTING MAJOR DECIDUOUS TREE
N.T.S.

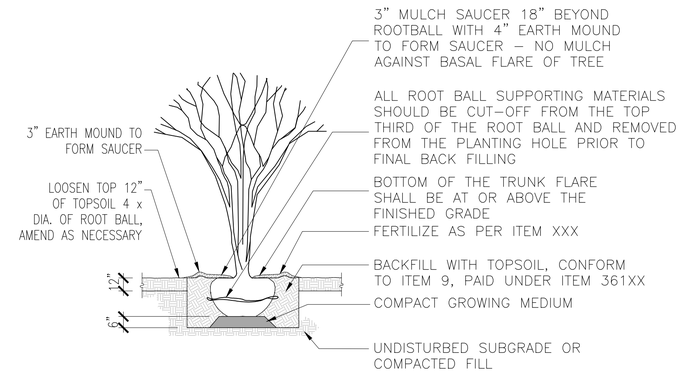

4 PLANTING MINOR DECIDUOUS TREE/SHRUB
N.T.S.

NOTES:
1. ON CENTER (TYP.) SEE PLANT SCHEDULE NOTES FOR SPACING.
2. PLACE MULCH LAYER PRIOR TO PLANTING GROUND COVER.

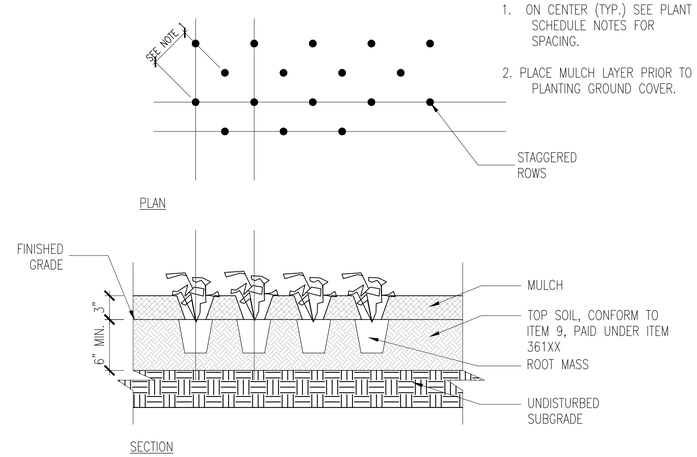

2 GROUND COVER/PERENNIAL PLANTING DETAIL
N.T.S.

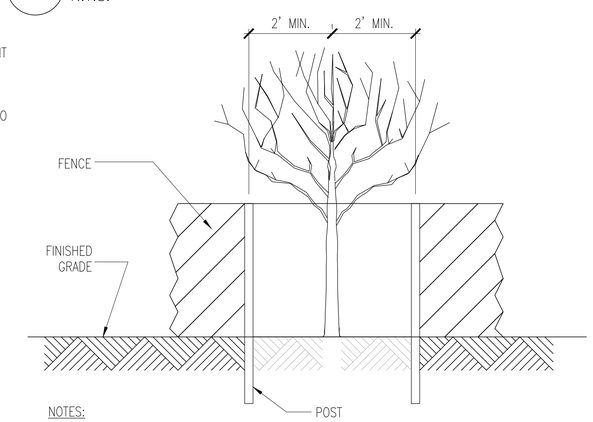

NOTES:
1. THE FENCE SHALL BE LOCATED A MINIMUM OF 6 FEET AWAY FROM THE TRUNK OF THE TREE TO BE SAVED OR AS APPROPRIATE TO MEET SITE AND CONSTRUCTION ACTIVITY CONDITIONS.
2. FENCE POSTS SHALL BE EITHER STANDARD STEEL POSTS OR WOOD POSTS WITH A MINIMUM CROSS SECTIONAL AREA OF 3.0 SQUARE INCH AND SHALL BE OF SUFFICIENT LENGTH TO ALLOW FOR INSTALLATION TO A DEPTH OF 3' BELOW GROUND LEVEL AND 6' ABOVE GROUND LEVEL.
3. FENCING SHALL BE ORANGE PLASTIC BARRIER FENCE WITH UNIFORM SQUARE MESH MEASURING APPROXIMATELY 3" BETWEEN ITS PARALLEL SIDES. FENCE HEIGHT SHALL BE 6'. FENCE SHALL BE MAINTAINED THROUGHOUT PROJECT DURATION. SHOULD IT BECOME DAMAGED DURING CONSTRUCTION PERIOD, CONSTRUCTION MANAGER SHALL BE RESPONSIBLE FOR REPAIRING AND RESTORING FENCE PROTECTION.

5 TREE PROTECTION
N.T.S.

PLANTING NOTES:.

1. PLANT MATERIALS WERE SELECTED USING THE NEW YORK STATE STORMWATER MANAGEMENT DESIGN MANUAL, APPENDIX H: LANDSCAPING GUIDANCE/PLANT LISTS
2. FOR ADDITIONAL INFORMATION ABOUT UPLAND PLANTING AREAS, SHRUB PLANTING AREAS AND UPLAND SEEDING AREAS SEE LANDSCAPE PLAN AND TYPICAL SHORELINE SECTIONS.
3. ALL PLANT MATERIAL SHALL CONFORM TO THE REQUIREMENTS AS ESTABLISHED BY THE AMERICAN ASSOCIATION OF NURSERYMAN, LATEST EDITION.
4. SEE SPECIFICATIONS FOR ITEMS NOT COVERED ON THE PLANS AND DETAILS.
5. THE SITE SHALL BE KEPT NEAT AT ALL TIMES AND SHALL BE KEPT FREE OF DEBRIS LEFT FROM THE PLANTING OPERATION. THE CONTRACTOR IS TO USE CARE DURING EXCAVATION AND PLANTING TO AVOID DISTURBING OR DAMAGING ANY ADJACENT CONSTRUCTION SUBSURFACE DRAINAGE OR UTILITIES. ANY DAMAGE RESULTING FROM THIS CONSTRUCTION WILL BE THE CONTRACTOR'S RESPONSIBILITY AND SHALL BE RESTORED AT HIS EXPENSE TO THE SATISFACTION OF THE OWNER.
6. CONTRACTOR SHALL SUPPLY PLANT MATERIAL IN THE QUANTITIES INDICATED IN THE INDIVIDUAL CALL–OUTS ON THE PLANTING PLANS. SHOULD THERE BE DISCREPANCIES BETWEEN THE PLAN CALL–OUTS AND THE PLANT SCHEDULE, THE PLAN CALL–OUT SHALL DETERMINE FINAL QUANTITIES.
7. PLANT MATERIAL LOCATIONS ON THE PLANTING PLANS ARE APPROXIMATE AND SHALL BE ADJUSTED AS DIRECTED BY THE LANDSCAPE ARCHITECT IN THE FIELD. SHOULD PLANTS BE INSTALLED PRIOR TO LANDSCAPE ARCHITECT'S FIELD STAKING AND/OR PLACEMENT DIRECTION, CONTRACTOR SHALL PLANT AT THEIR OWN RISK.

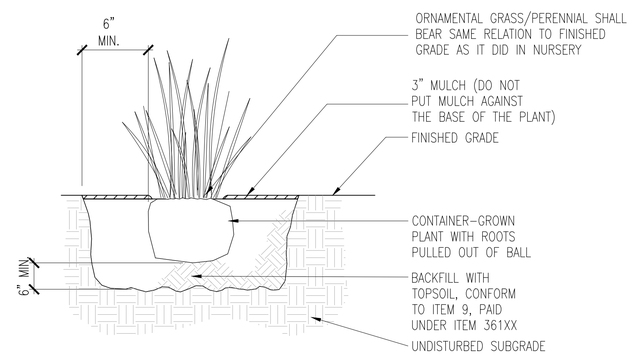

3 PLANTING MINOR ORNAMENTAL GRASSES
N.T.S.

DESIGNED BY: _____
CHECKED BY: _____
DRAWN BY: _____
COMPARED BY: _____

SYMBOL	DESCRIPTION	APPROVED	DATE

REVISIONS

NV5
40 MARCUS DRIVE, SUITE 201
MELVILLE, NEW YORK 11747
P: 631.891.3200 WWW.NV5.COM

CARLLS RIVER WATERSHED PROJECT
DRAFT PROGRESS PLANS

MISCELLANEOUS DETAILS

PROJECT NO.	SCALE	DWG. NO	SHEET NO.
728518–0000340	N/A	MD–05	19 OF 19

S:\Project\728518-0000340.00-Carlls River Watershed Design Project\Technical\Cadd\Plan Sheets\04-07-Miscellaneous Details-Location 1 _4.dwg

April 8, 2019

NYSDEC, Division of Environmental Permits
SUNY at Stony Brook, 50 Circle Drive
Stony Brook, NY 11790
Attn: Ms. Kim Lamiroult

Re: Town of Babylon- Carlls River Watershed Project
Southard's Pond Control Gate and Culverts: 1-4720-00811/02023

Dear Ms. Lamiroult:

Enclosed please find a NYSDEC permit application package for the proposed fish passage hydraulic improvements at Southards Pond located in Belmont Lake State Park. The proposed improvements include 1) replacement and up-sizing of the existing two (2) 36" x 60" CMP (corrugated metal pipe) overflow culverts with one 10' x 3' precast box culvert 2) installation of an additional 2' x 3' precast box culvert and 2' x 3' sluice gate 3) construction of naturalized fish and wildlife passage and associated 25 cubic yards of rip-rap at 18" deep (450 sq. ft.), and 5) creation of 200 sq. ft. of wetland mitigation area.

Environmental benefits expected to result from the proposed project include opening Southard's Pond and large reaches of the eastern and western spurs of the Carlls River to migratory fish as spawning habitat and providing hydraulic improvements including reducing upstream flooding elevations and downstream peak flows during storm events.

The project is part of a comprehensive watershed management plan for the Carlls River being implemented by the Town of Babylon in conjunction with the Governor's Office of Storm Recovery (GOSR) and the NY Rising Community Reconstruction (NYRCR) Program. Other flood mitigation and stormwater infrastructure improvement projects included in the comprehensive Carlls River Watershed project include the following:

- NYS Route 27 Stormwater Wetland: NYSDEC ID# 1-4720-00556/00010
- Locust Avenue Culvert Replacement: 1-4720-02115/00011
- Argyle Lake Outfall Culvert Replacement: NYSDEC ID#: 1-4720-00863/00023
- Elda Lake Control Gate & Culvert/Fish Passage Improvements: No NYSDEC ID

This application package for the Southard's Pond Control Gate and Culverts (1-4720-00811/02023) includes the following:

- Joint Application Form
- Belmont Lake State Park (NYSOPRHP) Letter of Support

DRAFT

- Site Plans (4 sets) prepared by NV5 (dated February 2019)
- Project Description including Discussion of Compatibility and Weighing Standards
- Short Environmental Assessment Form
- Structural and Archaeological Assessment Form
- Copy of Dam Safety Application including Completed D-1 Supplemental Form and Design Report
- NYS Parks, Recreation, and Historic Preservation Office Letter (dated May 29, 2018)
- New York Natural Heritage Program Letter (dated June 24, 2018)
- Site Photographs
- Location Map
- NYSDEC Article 24 Application Fee ($200)

Kindly contact me at (631) 727-2400 or wbowman@landuse.us if you have any questions or require additional information for Department's review of the Town's application for the Southard's Pond Control Gate, Culvert, and Fish Passage Project. Thank you.

Very truly yours,

William Bowman, PhD
Senior Scientist

cc. J Figueredo (NV5), via email
R Groh (Town of Babylon), via email

DRAFT

NEW YORK STATE | Department of Environmental Conservation | Office of General Services | Department of State

US Army Corps of Engineers

JOINT APPLICATION FORM

For Permits for activities activities affecting streams, waterways, waterbodies, wetlands, coastal areas, sources of water, and endangered and threatened species.

You must separately apply for and obtain Permits from each involved agency before starting work. Please read all instructions.

1. **Applications To:**

>NYS Department of Environmental Conservation ☑ Check here to confirm you sent this form to NYSDEC.

Check all permits that apply:

- ☑ Stream Disturbance
- ☑ Excavation and Fill in Navigable Waters
- ☐ Docks, Moorings or Platforms
- ☑ Dams and Impoundment Structures
- ☑ 401 Water Quality Certification
- ☑ Freshwater Wetlands
- ☐ Tidal Wetlands
- ☐ Wild, Scenic and Recreational Rivers
- ☐ Coastal Erosion Management
- ☐ Water Withdrawal
- ☐ Long Island Well
- ☐ Incidental Take of Endangered / Threatened Species

>US Army Corps of Engineers ☑ Check here to confirm you sent this form to USACE.

Check all permits that apply: ☑ Section 404 Clean Water Act ☑ Section 10 Rivers and Harbors Act

Is the project Federally funded? ☑ Yes ☐ No

If yes, name of Federal Agency: US Department of Housing and Urban Development- GOSR Project

General Permit Type(s), if known: NWP#3 Maintenance | NWP#27 Aquatic Habitat Restor.

Preconstruction Notification: ☑ Yes ☐ No

>NYS Office of General Services ☐ Check here to confirm you sent this form to NYSOGS.

Check all permits that apply:

- ☐ State Owned Lands Under Water
- ☐ Utility Easement (pipelines, conduits, cables, etc.)
- ☐ Docks, Moorings or Platforms

>NYS Department of State ☐ Check here to confirm you sent this form to NYSDOS.

Check if this applies: ☐ Coastal Consistency Concurrence

2. **Name of Applicant**

Town of Babylon (attn: Richard Groh)

Taxpayer ID (if applicant is NOT an individual): 11-600-1924

Mailing Address: Department of Coastal and Environmental Management, Room 23, 281 Phelps Lane

Post Office / City: North Babylon | State: NY | Zip: 11703

Telephone: 631-422-7640 Email: rgroh@townofbabylon.com

Applicant Must be (check all that apply): ☐ Owner ☑ Operator ☐ Lessee

3. **Name of Property Owner (if different than Applicant)**

New York State Parks, Recreation and Preservation

Mailing Address: 625 Belmont Ave

Post Office / City: West Babylon | State: NY | Zip: 11704

Telephone: (631) 669-1000 Email: Brian.Foley@parks.ny.gov

For Agency Use Only	Agency Application Number:

4. **Name of Contact / Agent**

William Bowman/Land Use Ecological Services, Inc.

Mailing Address	Post Office / City	State	Zip
570 Expressway Drive South, Suite 2F	Medford	NY	11763

Telephone 631-727-2400 Email wbowman@landuse.us

5. **Project / Facility Name**

Southard's Pond

Property Tax Map Section / Block / Lot Number: 102-1-3-1.1 & 1.2

Project Street Address, if applicable	Post Office / City	State	Zip
	Babylon	NY	11702

Provide directions and distances to roads, intersections, bridges and bodies of water

Project site is located where the Carll's River meets Southard's Pond at the southern pond boundary. Project site is approximately 765' west of Pond Place, and 725' east of Alexander Street.

☐ Town ☑ Village ☐ City

County	Stream/Waterbody Name
Babylon	Suffolk	Southard's Pond/Carll's River

Project Location Coordinates: Enter Latitude and Longitude in degrees, minutes, seconds:

Latitude: 40 ° 42 ' 33.7134 " Longitude: -73 ° 19 ' 43.5504 "

6. **Project Description:** Provide the following information about your project. Continue each response and provide any additional information on other pages. **Attach plans on separate pages.**

a. Purpose of the proposed project:

Project proposes replacement and upsizing of two (2) 36" x 60" CMP (corrugated metal pipe) overflow culverts, as well as installation of a new 2' x 3' precast box culvert and 2' x 3' sluice gate. Additionally, project proposes installation of a naturalized fish and wildlife passage channel. Proposed actions will aid in flood control and migratory fish spawning at the project site. Please see attached Project Description for details.

b. Description of current site conditions:

Project site is located on the southern margin of Southards Pond, beneath an existing pedestrian walkway. Location contains an existing 20.5' wide spillway and (2) 36" x 60" CMP overflow culverts.

c. Proposed site changes:

Project proposes to replace the existing CMP culverts with a 10' x 3' precast box culvert. Additionally, a new 2' x 3' precast box culvert will be installed, as well as a new 2' x 3' sluice gate. Construction of a naturalized fish and wildlife passage channel is also proposed. Please see Project Description for additional details.

d. Type of structures and fill materials to be installed, and quantity of materials to be used (e.g., square feet of coverage, cubic yards of fill material, structures below ordinary/mean high water, etc.):

Culverts to include one 10' x 3' precast box culvert, and one 2' x 3' precast box culvert. Proposed sluice gate to be 2' x 3'. A total of 15 CY of rip-rap will be placed along the fish passage channel. Approximately 200 SF of wetland mitigation area shall be planted as per project plan specifications. Please see attached Project Description for details.

e. Area of excavation or dredging, volume of material to be removed, location of dredged material placement:

All sediment removed during the proposed reconstruction will be temporarily stored, dewatered, and disposed of within the "dredging disposal area" as indicated on the site plans, located in the grassed walkway margin of the embankment. Dredged sediments will be covered with topsoil and re-planted. Total area of dredging disposal area is approximately 85 sq. ft

f. Is tree cutting or clearing proposed? ☐ Yes If Yes, explain below. ☑ No

Timing of the proposed cutting or clearing (month/year):

Number of trees to be cut: Acreage of trees to be cleared:

g. Work methods and type of equipment to be used:

Excavator, concrete truck, crane, excavator- or crane-mounted pile driving equipment, mudsucker pump, and other conventional construction equipment. For additional information, refer to provided Project Description.

h. Describe the planned sequence of activities:

1) Site preparation including utility relocation, pedestrian detours, and installation of sediment control practices; 2) Temporary water diversion and cofferdam installation; 3) Construction of new culvert, control gate, and fish passage from north to south; 4) Repair walkway and slopes and remove cofferdam; 5) Restoration and mitigation plantings; 6) Removal of remaining sediment control. Please see Project Description for more detail.

i. Pollution control methods and other actions proposed to mitigate environmental impacts:

None necessary nor proposed.

j. Erosion and silt control methods that will be used to prevent water quality impacts:

Silt fencing to be installed at downstream edge of work to prevent erosion of sediment into Southard's Pond & Carlls River. Turbidity curtain to be installed in the Carlls River downstream of project site. Temporary cofferdam shall be installed in order to perform work in the dry. These structures will alleviate erosion and sediment impacts associated with culvert installation to downstream habitats. Please see Project Description for details.

k. Alternatives considered to avoid regulated areas. If no feasible alternatives exist, explain how the project will minimize impacts:

Project will minimize impacts by reconstructing the new culverts in-place of the existing culverts. Additionally, installation of a fish passage will open the approximately 27-acre impoundment at Southard's Pond to spawning for migratory diadromous fish. Lastly, approx. 200 sq. ft. of mitigation wetland plantings and restoration plantings shall occur to offset the vegetated upland and wetland areas that will be lost.

l. Proposed use: ☐ Private ☑ Public ☐ Commercial

m. Proposed Start Date: Spring 2020 Estimated Completion Date: 3 months later

n. Has work begun on project? ☐ Yes If Yes, explain below. ☑ No

o. Will project occupy Federal, State, or Municipal Land? ☑ Yes If Yes, explain below. ☐ No

Project site is located within the Belmont Lake State Park.

p. List any previous DEC, USACE, OGS or DOS Permit / Application numbers for activities at this location:

Please see attached Previous Permits document.

q. Will this project require additional Federal, State, or Local authorizations, including zoning changes?

☑ Yes If Yes, list below. ☐ No

NYSDEC and USACOE approval is required.

7. **Signatures.**
Applicant and Owner (If different) must sign the application.
Append additional pages of this Signature section if there are multiple Applicants, Owners or Contact/Agents.

I hereby affirm that information provided on this form and all attachments submitted herewith is true to the best of my knowledge and belief.

Permission to Inspect - I hereby consent to Agency inspection of the project site and adjacent property areas. Agency staff may enter the property without notice between 7:00 am and 7:00 pm, Monday - Friday. Inspection may occur without the owner, applicant or agent present. If the property is posted with "keep out" signs or fenced with an unlocked gate, Agency staff may still enter the property. Agency staff may take measurements, analyze site physical characteristics, take soil and vegetation samples, sketch and photograph the site. I understand that failure to give this consent may result in denial of the permit(s) sought by this application.

False statements made herein are punishable as a Class A misdemeanor pursuant to Section 210.45 of the NYS Penal Law. Further, the applicant accepts full responsibility for all damage, direct or indirect, of whatever nature, and by whomever suffered, arising out of the project described herein and agrees to indemnify and save harmless the State from suits, actions, damages and costs of every name and description resulting from said project. In addition, Federal Law, 18 U.S.C., Section 1001 provides for a fine of not more than $10,000 or imprisonment for not more than 5 years, or both where an applicant knowingly and willingly falsifies, conceals, or covers up a material fact; or knowingly makes or uses a false, fictitious or fraudulent statement.

Signature of Applicant | Date

Applicant Must be (check all that apply): ☐ Owner ☑ Operator ☐ Lessee

Printed Name: Antonio Martinez/ Town of Babylon | Title: Deputy Supervisor

Signature of Owner (if different than Applicant) | Date

Printed Name: George Gorman | Title: Regional Parks Director NYS Parks

Signature of Contact / Agent | Date

Printed Name: William Bowman/Land Use Ecological Services, Inc. | Title: Senior Scientist

For Agency Use Only **DETERMINATION OF NO PERMIT REQUIRED**

Agency Application Number

(Agency Name) has determined that No Permit is required from this Agency for the project described in this application.

Agency Representative:

Printed Name | Title

Signature | Date

New York State
Department of Environmental Conservation

PERMISSION TO INSPECT PROPERTY

By signing this permission form for submission with an application for a permit(s) to the Department of Environmental Conservation ("DEC"), the signer consents to inspection by DEC staff of the project site or facility for which a permit is sought and, to the extent necessary, areas adjacent to the project site or facility. This consent allows DEC staff to enter upon and pass through such property in order to inspect the project site or facility, without prior notice, between the hours of 7:00 a.m. and 7:00 p.m., Monday through Friday. If DEC staff should wish to conduct an inspection at any other times, DEC staff will so notify the applicant and will obtain a separate consent for such an inspection.

Inspections may take place as part of the application review prior to a decision to grant or deny the permit(s) sought. By signing this consent form, the signer agrees that this consent remains in effect as long as the application is pending, and is effective regardless of whether the signer, applicant or an agent is present at the time of the inspection. In the event that the project site or facility is posted with any form of "posted" or "keep out" notices, or fenced in with an unlocked gate, this permission authorizes DEC staff to disregard such notices or unlocked gates at the time of inspection.

The signer further agrees that during an inspection, DEC staff may, among other things, take measurements, may analyze physical characteristics of the site including, but not limited to, soils and vegetation (taking samples for analysis), and may make drawings and take photographs.

Failure to grant consent for an inspection is grounds for, and may result in, denial of the permit(s) sought by the application.

Permission is granted for inspection of property located at the following address(es):

Belmont Lake State Park. Vicinity of Southards Pond earthen dam between Alexander Street and Southards Lane

*By signing this form, I affirm under penalty of perjury that I am authorized to give consent to entry by DEC staff as described above. I understand that false statements made herein are punishable as a Class A misdemeanor pursuant to Section 210.45 of the Penal Law.**

Ralph A. Scordino, Mayor		
Print Name and Title	Signature	Date

*The signer of this form must be an individual or authorized representative of a legal entity that:

- owns fee title and is in possession of the property identified above;
- maintains possessory interest in the property through a lease, rental agreement or other legally binding agreement; or
- is provided permission to act on behalf of an individual or legal entity possessing fee title or other possessory interest in the property for the purpose of consenting to inspection of such property.

Previous Permits

Town of Babylon
Carll's River System
Governor's Office of Storm Recovery Projects

Site 3: Southards Pond

Previous NYSDEC applications at Southards Pond Village Park as per DART search

Permit ID	Issue Date	Expiration Date
1-4720-01042/00001	2/16/1994	2/28/1999
1-4720-01042/00003	4/25/2005	4/29/2010
1-4720-01042/00004	None listed	None listed
1-4720-01042/00005	None listed	None listed
1-4720-01042/00006	4/14/2011	4/15/2016

1 Project Purpose and Existing Conditions

The Town of Babylon proposes replacement and up-sizing of two (2) 36" x 60" CMP (corrugated metal pipe) overflow culverts, via replacement with a 3' x 10' precast box culvert, as well as installation of a new 2' x 3' precast box culvert and 2' x 3' sluice control gate at the Southard's Pond outfall at Belmont Lake State Park. This site also features a 20.5' wide primary spillway, as well as a frequently utilized gravel pedestrian walkway and concrete bridge. Both the spillway and pedestrian pathway and bridge are to remain. Additionally, the applicant proposes installation of a naturalized fish and wildlife passage channel east of the existing spillway to allow for access to Southard's Pond for spawning migratory diadromous fish species. Lands and waters both upstream and downstream of the existing spillway are part of Belmont Lake State Park (New York State Office of Parks, Recreation, and Historic Preservation).

Southard's Pond has a surface impoundment of approximately 27 acres and a contributory drainage area of approximately 13,900 acres. Runoff that cannot be conveyed through the existing spillway or existing overflow culverts flows over the Southard's Pond embankment, which is approximately 3' higher than the existing spillway. This embankment currently serves as a pedestrian path through the park, and flooding of this embankment restricts pedestrian access during storm events. The proposed sluice gate with preemptive lowering in advance of storms will allow the Town to lower maximum upstream ponding elevations at Southard's Pond. Additionally, the larger relief culvert will enhance outlet performance during storm events. The proposed naturalized fish and wildlife passage will open the approximately 27-acre impoundment at Southard's Pond, as well as approximately 3.0 additional miles of upper Carlls River watershed, to spawning for migratory diadromous fish.

2 Proposed Project

The proposed project includes the following 1) replacement and up-sizing of the existing two (2) 36" x 60" CMP (corrugated metal pipe) overflow culverts with one 10' x 3' precast box culvert 2) installation of an additional 2' x 3' precast box culvert and 2' x 3' sluice gate 3) construction of naturalized fish and wildlife passage and associated 25 cubic yards of rip-rap at 18" deep (450 sq. ft.), and 5) creation of 200 sq. ft. of wetland mitigation area

It is expected that the new 2' x 3' control sluice gate will be used to pre-emptively lower the pond by 2.0 ft in advance of storms. For the proposed sluice gate, modelling indicates that the lake level can be dropped approximately 1.0 ft every 15 hours during low flow periods in advance of storms.

The proposed 10' x 3' precast box culvert and additional 2' x 3' precast box culvert and 2' x 3' sluice gate will be located within the footprint of the existing concrete embankment in which the existing corrugated metal pipe arch relief culverts are located. Accordingly, no loss of shoreline or wetland vegetation shall occur as a result of the proposed culvert modifications to the west of the primary spillway.

A temporary sheetpile cofferdam shall be installed upstream of the work area, so that construction may be completed in the dry. A mudsucker pump or well points may be used for local dewatering behind the cofferdam. If the contractor selects to use well points, the contractor will need to obtain the necessary permits and approvals before install the well point system, including a Long Island Well permit for temporary dewatering. This shall be obtained by the construction or dewatering contractor prior to installation as noted on the site plans. The Long Island Well permit cannot be applied for/obtained at this time; as the means and methods (i.e. number and depth of well points, number and capacity of pumps, maximum and daily pump rates) are not known at this time.

DRAFT

Sediments removed during the proposed construction will be temporarily stored, dewatered, and then disposed of within the "dredging disposal areas" shown on the site plans located in the grassed walkway margin of the Southard's Pond embankment. The dredged sediments will be covered with topsoil and re-planted.

The constructed naturalized fish passage channel will result require placement of approximately 450 of rip-rap (~25 CY) in wetland areas adjacent to the proposed fish passage channel on the north and south embankments of the pedestrian walkway at Southard's Pond. Accordingly, the proposed project includes establishment and re-planting of approximately 200 SF of mitigation wetland plantings (where no wetland vegetation currently exists) and restoration plantings in existing wetland areas that will be disturbed. Proposed vegetation consists of native wetland shrubs such as silky dogwood, sweet pepperbush, and spicebush, as well as native emergent herbaceous plants including broad-leaved cattail, broom sedge, and duck potato.

3 Environmental Mitigation

Silt fencing shall be installed at the downstream edge of the work limits to prevent erosion of disturbed sediments into Southard's Pond or the Carlls River. A turbidity curtain shall be installed in the Carlls River and Southard's Pond surrounding the project site to prevent downstream movement of turbidity resulting from the proposed construction. A cofferdam shall be installed surrounding upstream work areas and shall serve to minimize potential turbidity impacts in Southard's Pond. As mentioned previously, the proposed rip-rap placement will result in the loss of approximately 450 sq. ft. of naturally vegetated upland and wetland areas on the north and south embankments of the pedestrian walkway at Southard's Pond. Accordingly, the proposed project includes establishment and re-planting of approximately 200 SF of mitigation wetland plantings (where no wetland vegetation currently exists) and restoration plantings in existing wetland areas that will be disturbed. Proposed vegetation consists of native wetland shrubs such as silky dogwood, sweet pepperbush, and spicebush, as well as native emergent herbaceous plants including broad-leaved cattail, broom sedge, and duck potato.

The area of disturbance associated with the fish passage is relatively small (i.e. ~450 SF) within wetlands, located immediately adjacent to the earthen dam, and utilizes existing cleared areas to the maximum extent possible. Furthermore, additional wetland plantings are proposed to mitigate for the permanent wetland disturbance associated with the fish passage. The proposed overflow culvert and sluice gate improvements are located within an existing concrete embankment and, therefore, will not result in the degradation or loss of any natural vegetation and therefore will not result in the loss of any wetland functions or benefits. Due to the minimal disturbance to areas of natural vegetation to impacts to the NYS-protected wildlife and plants that may occur within Belmont Lake State Park are expected to result from the proposed project.

4 Discussion of Compatibility and Weighing Standards

Fill placement or grading within wetlands in considered incompatible with maintaining the function and benefits of freshwater wetlands, pursuant to the New York State Freshwater Wetlands Permit Requirements (6 CRR-NY 663.4(d)). However, the proposed project meets NYSDEC standards for activities within wetlands or adjacent area as it would 1) would be compatible with preservation, protection and conservation of the wetland and its benefits, 2) would result in no more than insubstantial degradation to, or loss of, any part of the wetland, and (3) would be compatible with public health and welfare. For example, the proposed fill placement and grading within wetlands and adjacent area is require for the proposed fish and wildlife passage channel. The proposed fish passage channel will enhance the function and benefits of the Carlls River and Southards Pond wetland complex by opening the approximately 27-acre impoundment at Southard's

Pond, as well as approximately 3.0 additional miles of upper Carlls River watershed, to spawning for migratory diadromous fish. In addition, the proposed fish passage will increase the potential for existing populations of resident (non-migratory) fish to move across the Southard Pond earthen dam. The area of disturbance associated with the fish passage is relatively small (i.e. ~450 SF) within wetlands, located immediately adjacent to the earthen dam, and utilizes existing cleared areas to the maximum extent possible. Furthermore, additional wetland plantings are proposed to mitigate for the permanent wetland disturbance associated with the fish passage. The proposed overflow culvert and sluice gate improvements are located within an existing concrete embankment and, therefore, will not result in the degradation or loss of any natural vegetation and therefore will not result in the loss of any wetland functions or benefits. Lastly, the proposed project clearly will not have any adverse impacts to public heath and welfare. The proposed sluice gate and larger overflow culvert will allow Southards Pond to be lowered prior to storm events and will decrease upstream ponding elevation during and after storm events. This will minimize potential for overtopping of the earthen dam and restrictions to pedestrian access within Belmont Lake State Park when flooding of the embankment restricts pedestrian access during storm events.

There are alternatives to the proposed natural fish passage that could require less disturbance to wetlands such as a Denil fish ladder located within the existing spillway. This alternative is not preferable for ecological or hydraulic reasons. First, placing the fish ladder within the spillway would result in some loss of conveyance capacity within the spillway and may increase the potential for the spillway to become clogged with debris. Second, the proposed natural channel will allow a greater number of aquatic and terrestrial species to cross between upstream and downstream side of the earthen dam compared to a fish ladder, which is focused at providing passage for migratory river herring. Accordingly, the proposed natural fish channel is the preferred alternative for the site.

Due to the minimal area of disturbance and restriction of this disturbance largely to an existing cleared area, the reduction of the wetlands values and functions at this location will not be adversely impacted by the proposed project. In fact, the ecological values of the Carlls River and Southards Pond complex will clearly be enhanced by the potential expansion of the migratory alewife run to utilize Southards Pond and upstream areas as spawning habitat and the enhanced ecological value clearly outweighs the localized disturbance associated with the fish passage installation. Furthermore, the proposed overflow culvert and sluice gate improvements satisfy a social need by improving the hydraulic function of the spillway and decreasing potential for overtopping of the earthen dam and flooding of the pedestrian pathway without any impacts to wetland functions or values due to the restriction of the proposed improvement to the existing concrete embankment.

5 Construction Sequence

Perform clearing and grubbing of construction area, and installation of erosion and sediment control practices, including silt fencing and turbidity curtain. Provide pedestrian path and road closure and detour signage and install concrete closure barriers. Next cofferdam installation, excavation, culvert and fish passage construction will occur. Then the pathway, sidewalks, and slopes repaired and then cofferdam removed. Lastly, restoration and mitigation plantings shall occur is disturbed areas. After site restoration, erosion and sediment control practices (silt fence and turbidity curtain) shall be removed.

DRAFT

617.20
Appendix B
Short Environmental Assessment Form

Instructions for Completing

Part 1 - Project Information. The applicant or project sponsor is responsible for the completion of Part 1. Responses become part of the application for approval or funding, are subject to public review, and may be subject to further verification. Complete Part 1 based on information currently available. If additional research or investigation would be needed to fully respond to any item, please answer as thoroughly as possible based on current information.

Complete all items in Part 1. You may also provide any additional information which you believe will be needed by or useful to the lead agency; attach additional pages as necessary to supplement any item.

Part 1 - Project and Sponsor Information

Name of Action or Project:
Southards Pond Control Gate, Culvert, and Fish Passage Improvements

Project Location (describe, and attach a location map):
Intersection of Carlls River and Southards Pond, approximately 765' west of Pond Place, and 725' east of Alexander Street, Babylon, NY 11702

Brief Description of Proposed Action:
The proposed improvements include 1) replacement and up-sizing of the existing two (2) 36" x 60" CMP (corrugated metal pipe) overflow culverts with one 10' x 3' precast box culvert 2) installation of an additional 2' x 3' precast box culvert and 2' x 3' sluice gate 3) construction of naturalized fish and wildlife passage and associated 25 cubic yards of rip-rap at 18" deep (450 sq. ft.), and 5) creation of 200 sq. ft. of wetland mitigation area. Environmental benefits expected to result from the proposed project include opening Southard's Pond and large reaches of the eastern and western spurs of the Carlls River to migratory fish as spawning habitat and providing hydraulic improvements including reducing upstream flooding elevations and downstream peak flows during storm events. Please see attached Project Description for details.

Name of Applicant or Sponsor:	Telephone: 631-727-2400
William Bowman/Land Use Ecological Services, Inc. (AGENT)	E-Mail: wbowman@landuse.us

Address:
570 Expressway Drive South, Suite 2F

City/PO:	State:	Zip Code:
Medford	NY	11763

	NO	YES
1. Does the proposed action only involve the legislative adoption of a plan, local law, ordinance, administrative rule, or regulation? If Yes, attach a narrative description of the intent of the proposed action and the environmental resources that may be affected in the municipality and proceed to Part 2. If no, continue to question 2.	☑	☐
2. Does the proposed action require a permit, approval or funding from any other governmental Agency? If Yes, list agency(s) name and permit or approval: NYSDEC and USACE approvals are required.	☐	☑

3.a. Total acreage of the site of the proposed action? +/-0.04 acres
b. Total acreage to be physically disturbed? +/-0.04 acres
c. Total acreage (project site and any contiguous properties) owned or controlled by the applicant or project sponsor? 54.89 acres Belmont Lake State Park

4. Check all land uses that occur on, adjoining and near the proposed action.
☐ Urban ☐ Rural (non-agriculture) ☐ Industrial ☐ Commercial ☐ Residential (suburban)
☐ Forest ☐ Agriculture ☑ Aquatic ☐ Other (specify): _____
☑ Parkland Southards Pond Park

	NO	YES	N/A
5. Is the proposed action,			
a. A permitted use under the zoning regulations?	☐	☑	☐
b. Consistent with the adopted comprehensive plan?	☐	☐	☑

	NO	YES
6. Is the proposed action consistent with the predominant character of the existing built or natural landscape?	☐	☑
7. Is the site of the proposed action located in, or does it adjoin, a state listed Critical Environmental Area? If Yes, identify: As per NYSDEC EAF Mapper	☑	☐
8. a. Will the proposed action result in a substantial increase in traffic above present levels? Please see attached plans for Traffic Control Plans	☑	☐
b. Are public transportation service(s) available at or near the site of the proposed action? Nearest bus station is approx. 0.5 mi. away	☐	☑
c. Are any pedestrian accommodations or bicycle routes available on or near site of the proposed action?	☐	☑
9. Does the proposed action meet or exceed the state energy code requirements? If the proposed action will exceed requirements, describe design features and technologies: Not applicable	☑	☐
10. Will the proposed action connect to an existing public/private water supply? If No, describe method for providing potable water: Not applicable	☑	☐
11. Will the proposed action connect to existing wastewater utilities? If No, describe method for providing wastewater treatment: Not applicable	☑	☐
12. a. Does the site contain a structure that is listed on either the State or National Register of Historic Places? As per NYSDEC EAF Mapper.	☐	☑
b. Is the proposed action located in an archeological sensitive area? Refer to NYSHPO Letter	☑	☐
13. a. Does any portion of the site of the proposed action, or lands adjoining the proposed action, contain wetlands or other waterbodies regulated by a federal, state or local agency? As per NYSDEC EAF Mapper	☐	☑
b. Would the proposed action physically alter, or encroach into, any existing wetland or waterbody? If Yes, identify the wetland or waterbody and extent of alterations in square feet or acres: Proposed actions shall occur within NYSDEC-regulated freshwater wetlands (ID: BW-1). Approximately 0.04 acres of temporary or permanent disturbance or alterations are proposed.	☐	☑

14. Identify the typical habitat types that occur on, or are likely to be found on the project site. Check all that apply:

☐ Shoreline ☐ Forest ☐ Agricultural/grasslands ☐ Early mid-successional

☑ Wetland ☐ Urban ☐ Suburban

	NO	YES
15. Does the site of the proposed action contain any species of animal, or associated habitats, listed by the State or Federal government as threatened or endangered? See attached for species listed by NYNHP or NY Nature Explorer	☐	☑
16. Is the project site located in the 100 year flood plain? As per NYSDEC EAF Mapper	☐	☑
17. Will the proposed action create storm water discharge, either from point or non-point sources? If Yes, a. Will storm water discharges flow to adjacent properties? ☐ NO ☐ YES	☑	☐
b. Will storm water discharges be directed to established conveyance systems (runoff and storm drains)? If Yes, briefly describe: ☐ NO ☐ YES		

	NO	YES
18. Does the proposed action include construction or other activities that result in the impoundment of water or other liquids (e.g. retention pond, waste lagoon, dam)? If Yes, explain purpose and size: _____	✔	☐
19. Has the site of the proposed action or an adjoining property been the location of an active or closed solid waste management facility? If Yes, describe: _____	✔	☐
20. Has the site of the proposed action or an adjoining property been the subject of remediation (ongoing or completed) for hazardous waste? If Yes, describe: As per NYSDEC EAF Mapper	✔	☐

I AFFIRM THAT THE INFORMATION PROVIDED ABOVE IS TRUE AND ACCURATE TO THE BEST OF MY KNOWLEDGE

Applicant/sponsor name: William Bowman/Land Use Ecological Services, Inc. Date: 2/7/19

Signature: _____

Part 2 - Impact Assessment. The Lead Agency is responsible for the completion of Part 2. Answer all of the following questions in Part 2 using the information contained in Part 1 and other materials submitted by the project sponsor or otherwise available to the reviewer. When answering the questions the reviewer should be guided by the concept "Have my responses been reasonable considering the scale and context of the proposed action?"

	No, or small impact may occur	Moderate to large impact may occur
1. Will the proposed action create a material conflict with an adopted land use plan or zoning regulations?	☐	☐
2. Will the proposed action result in a change in the use or intensity of use of land?	☐	☐
3. Will the proposed action impair the character or quality of the existing community?	☐	☐
4. Will the proposed action have an impact on the environmental characteristics that caused the establishment of a Critical Environmental Area (CEA)?	☐	☐
5. Will the proposed action result in an adverse change in the existing level of traffic or affect existing infrastructure for mass transit, biking or walkway?	☐	☐
6. Will the proposed action cause an increase in the use of energy and it fails to incorporate reasonably available energy conservation or renewable energy opportunities?	☐	☐
7. Will the proposed action impact existing: a. public / private water supplies?	☐	☐
b. public / private wastewater treatment utilities?	☐	☐
8. Will the proposed action impair the character or quality of important historic, archaeological, architectural or aesthetic resources?	☐	☐
9. Will the proposed action result in an adverse change to natural resources (e.g., wetlands, waterbodies, groundwater, air quality, flora and fauna)?	☐	☐

	No, or small impact may occur	Moderate to large impact may occur
10. Will the proposed action result in an increase in the potential for erosion, flooding or drainage problems?	☐	☐
11. Will the proposed action create a hazard to environmental resources or human health?	☐	☐

Part 3 - Determination of significance. The Lead Agency is responsible for the completion of Part 3. For every question in Part 2 that was answered "moderate to large impact may occur", or if there is a need to explain why a particular element of the proposed action may or will not result in a significant adverse environmental impact, please complete Part 3. Part 3 should, in sufficient detail, identify the impact, including any measures or design elements that have been included by the project sponsor to avoid or reduce impacts. Part 3 should also explain how the lead agency determined that the impact may or will not be significant. Each potential impact should be assessed considering its setting, probability of occurring, duration, irreversibility, geographic scope and magnitude. Also consider the potential for short-term, long-term and cumulative impacts.

☐ Check this box if you have determined, based on the information and analysis above, and any supporting documentation, that the proposed action may result in one or more potentially large or significant adverse impacts and an environmental impact statement is required.

☐ Check this box if you have determined, based on the information and analysis above, and any supporting documentation, that the proposed action will not result in any significant adverse environmental impacts.

Name of Lead Agency	Date
Print or Type Name of Responsible Officer in Lead Agency	Title of Responsible Officer
Signature of Responsible Officer in Lead Agency	Signature of Preparer (if different from Responsible Officer)

PRINT

Threatened and Endangered Plants and Animals as per NY Natural Heritage Program Correspondence and NY Nature Explorer

Southard's Pond Control Gate/Culvert & Fish Passage Improvements
Belmont Lake State Park, Babylon, NY 11702

Common Name	Scientific Name	NYS or Federal	Protection Status	Source
Prothonotary Warbler	*Protonotaria citrea*	NYS	Protected Bird	NYNHP
Barratt's Sedge	*Carex barrattii*	NYS	Endangered	NY Nature Explorer
Few-flowered Nut Sedge	*Scleria pauciflora*	NYS	Endangered	NY Nature Explorer
Flax-leaf Whitetop	*Sericocarpus linifolius*	NYS	Threatened	NY Nature Explorer
Hyssop-skullcap	*Scutellaria integrifolia*	NYS	Endangered	NY Nature Explorer
Soapwort Gentian	*Gentiana saponaria*	NYS	Endangered	NY Nature Explorer
Swamp Sunflower	*Helianthus angustifolius*	NYS	Threatened	NY Nature Explorer
Velvet Panic Grass	*Dichanthelium scoparium*	NYS	Endangered	NY Nature Explorer
Velvety Bush Clover	*Lespedeza stuvei*	NYS	Threatened	NY Nature Explorer
Red Maple-Blackgum Swamp		NYS	Rare Community	NYNHP

95-20-7 (12/98)

New York State Department of Environmental Conservation
Supplement to Joint Application Form

STRUCTURAL ARCHAEOLOGICAL ASSESSMENT FORM (SAAF)

PART 1 -- APPLICANT COMPLETES

APPLICANT INFORMATION

1.	Applicant Name	Town of Babylon (attn: Rich Groh)
2.	Applicant Address	Department of Coastal and Environmental Management, Room 23, 281 Phelps Lane North Babylon, NY 11703

PROJECT INFORMATION

3.	Project/Facility Name	Southards Pond Control Gate, Culverts, and Fish Passage Improvements
4.	Project/Facility Location	Intersection of Carlls River and Southards Pond, approximately 765' west of Pond Place, and 725' east of Alexander Street, Babylon, NY 11702
5.	Is the proposed project adjacent to, or does it contain a building or structure listed in the State or National Register of Historic Places?	☑ Yes ☐ No Belmont Lake SP Building District is listed as NR-eligible
6.	Are there any buildings or structures 50 years old or older adjacent to or within the proposed project area?	☑ Yes ☐ No
	If the answer to question 5 and/or 6 is yes, provide the following information for each building and structure (use attachments if necessary):	
a.	Name of structure	Southard's Pond Dam in Belmont Lake State Park Building District USN 1031.000748
b.	Location	Intersection of Carlls River and Southards Pond, approximately 765' west of Pond Place, and 725' east of Alexander Street, Babylon, NY 11702
c.	Type of structure (ex. house, outbuilding, barn, bridge, dam, ruins)	Spillway/Culvert/Dam
d.	Approximate age or date of construction	Between 1930 and 1947
7.	Might the proposed project have any impact (physical/visual) upon any buildings or structures listed in the State or National Register of Historic Places **or** 50 years old or older?	☑ Yes ☐ No

If yes, describe briefly (use attachments if necessary): Refer to NYSHPO letter dated May 28, 2018.

The new culvert and gate are within the footprint of the existing concrete embankment in which the existing corrugated metal pipe arch relief culverts are located. Accordingly, no visual impacts to the embankment are proposed. The new fish passage is located within an existing cleared area to the east of the spillway and, as per NYSHPO letter, is not expected to impact cultural resources.

APPLICANT SECTION CONTINUES ON REVERSE SIDE

PART 1 -- APPLICANT COMPLETES

8. Provide photographs of every building and structure that may be impacted by the project as described in number 7, on the opposite side of this page. The following standards are recommended:
   - Minimum of 2 photographs
   - Photographs must be 3.5" x 5" in size or larger
   - Photos must be **clear** and **focused**
   - Digital photographs must be printed on photo paper and be produced at a printer setting of a minimum of 600 dpi
   - Clearly label photos so it is obvious what is being illustrated; key photos to map or plan, if possible
   - Photo 1: show both the entire front and side of the structure in a single shot from as close to the building as possible. Be sure the structure is not partially or fully blocked by trees or other obstructions
   - Photo 2: show relationship of building or structure to roadway or surroundings

9. Has the land within the proposed project area been previously disturbed or altered (excavated, landscaped, filled, utilities installed)? ☑ Yes ☐ No

If yes, describe briefly, including depth of disturbance (use attachments if necessary):

Location is currently developed with a spillway and impoundment constructed between 1930 and 1947 and including walking path,

20.5' wide primary spillway and (2) 36" x 60" CMP overflow culverts. Depth of disturbance is approximately 8 feet.

10. Approximate percentage of proposed project area with slopes:

    Please note that some nominal portions of project area will have slopes greater than 15% as a result of the stream bank.

0 - 10%	100 %
10 - 15%	0 %
15% or greater	0 %

11. Approximate percentage of proposed project site with the following drainage characteristics:

    As per USDA Web Soil Survey, 100% of the soils consist of "berryland mucky sand" (very poorly drained).

Well drained	0 %
Moderately well drained	0 %
Poorly drained	100 %

Prepared By (Print or type name): William Bowman/Land Use Ecological Services, Inc.

Signature:

Date: 2/7/19

PART 2 -- DEPARTMENT OF ENVIRONMENTAL CONSERVATION (DEC) COMPLETES

APPLICANT/PROJECT INFORMATION		
1.	Applicant Name	
2.	Project/Facility Name	
3.	DEC Number	- - / -

BUILDINGS AND STRUCTURES		
4.	Might the proposed project have any impact (physical/visual) upon any buildings or structures listed in the State or National Register of Historic Places **or** 50 years old or older?	☐ Yes ☐ No
	If yes, DEC must consult with the Office of Parks, Recreation and Historic Preservation (OPRHP). DEC must request a determination of eligibility for the State Register of Historic Places and/or comments regarding project impact. Include information supplied by the applicant in response to questions 5, 6, 7 and 8 of **Part 1** of this form.	

ARCHAEOLOGICAL SITES		
5.	Does the proposed project area coincide with a circle, square or stippled area on OPRHP's Statewide Archaeological Inventory Map?	☐ Yes ☐ No
6.	Is the proposed project area outside of a circle or square, but one for which information has been provided (ex: documented reports of known sites) that suggests the area is archaeologically sensitive?	☐ Yes ☐ No
	If yes, what is the nature and source of information?	
7.	Is the proposed project area apparently undisturbed?	☐ Yes ☐ No
8.	Will the proposed action include a physical disturbance of the project area?	☐ Yes ☐ No
9.	Is the slope in the area characteristically less than 15% (unless on limestone/flint escarpments)?	☐ Yes ☐ No
10.	Is the proposed project area characteristically moderately well or well drained?	☐ Yes ☐ No
	If the answers to 5, 7-10 are yes, an archeological survey should be performed by the applicant. Provide the applicant with a copy of or the link to the *State Historic Preservation Office Phase 1 Archaeological Report Format Requirements (08/05).*	
	If the answer to 5 is no, but answers to 6-10 are yes, DEC must consult with OPRHP before requiring that the applicant perform an archaeological survey.	

DEC SECTION CONTINUES ON REVERSE SIDE

PART 2 -- DEPARTMENT OF ENVIRONMENTAL CONSERVATION (DEC) COMPLETES		
RESULTS OF EVALUATION		
☐ **SHPA-1**	No buildings, structures or archaeological sites identified at the project location.	
☐ **SHPA-2**	Buildings, structures or archaeological sites identified, but no impacts will occur, no survey required. No further cultural resources review required.	
☐	Consultation by DEC with OPRHP required.	☐ Structures ☐ Archaeology
☐	Archaeological survey required.	
Prepared by:		Date:

(03/2009 - Technical details updated)

NEW YORK STATE OF OPPORTUNITY.
Parks, Recreation, and Historic Preservation

ANDREW M. CUOMO
Governor

ROSE HARVEY
Commissioner

May 29, 2018

Ms. Jessica Enzmann
Environmental GIS Analyst
Town of Babylon
200 E. Sunrise Highway
Lindenhurst, NY 11757

Re: DEC
Stormwater Infrastructure Improvements - Carlls River Wetland
151 Phelps Lane, Town of Babylon, Suffolk County, NY
14PR02659

Thank you for requesting the comments of the Division for Historic Preservation of the Office of Parks, Recreation and Historic Preservation (OPRHP). We have reviewed the request for an updated OPRHP sign off letter in accordance with the New York State Historic Preservation Act of 1980 (section 14.09 of the New York Parks, Recreation and Historic Preservation Law). These comments are those of the Division for Historic Preservation and relate only to Historic/Cultural resources. They do not include potential environmental impacts to New York State Parkland that may be involved in or near your project. Such impacts must be considered as part of the environmental review of the project pursuant to the State Environmental Quality Review Act (New York Environmental Conservation Law Article 8) and its implementing regulations (6NYCRR Part 617).

Based upon this review, it is the OPRHP's opinion that your project will continue to have No Impact upon cultural resources in or eligible for inclusion in the State and National Register of Historic Places.

If you have any questions, I can be reached at (518) 268-2179.

Sincerely,

Nancy Herter

Nancy Herter
Archaeology Unit Program Coordinator

SITE PHOTOS 1 & 2:
Southard's Pond
Babylon, NY 11702

NOTES: 1. Photo 1 (top): Path towards Southard's Pond Spillway. Looking west. Photo taken 5/30/2018.
2. Photo 2 (bottom): Path towards Southard's Pond Spillway. Looking west. Photo taken 5/30/2018.

SITE PHOTOS 3 & 4:
Southard's Pond
Babylon, NY 11702

NOTES: 1. Photo 3 (top): Vegetation downstream of Impoundment. Looking southwest. Photo taken 5/30/2018.
2. Photo 4 (bottom): Benches and vegetation along Southard's Pond. Looking northeast. Photo taken on 5/30/2018.

SITE PHOTOS 5 & 6:
Southard's Pond
Babylon, NY 11702

NOTES: 1. Photo 5 (top): Existing Spillway and Overflow Culverts. Looking northwest. Photo taken 5/30/2018.
2. Photo 6 (bottom): Existing Spillway and Overflow Culverts. Looking northwest. Photo taken 5/30/2018.

SITE PHOTOS 7 & 8:
Southard's Pond
Babylon, NY 11702

NOTES: 1. Photo 7 (top): Existing Overflow Culverts. Looking northwest. Photo taken 5/30/2018
2. Photo 8 (bottom): Path to Southard's Pond Spllway. Looking west. Photo taken 5/30/2018

SITE PHOTO 9:
Southard's Pond
Babylon, NY 11702

NOTES: 1. Photo 9 (top): Path to Southard's Pond Spillway. Looking east. Photo taken 5/30/2018.

NEW YORK STATE OF OPPORTUNITY.
Parks, Recreation, and Historic Preservation

ANDREW M. CUOMO
Governor

ROSE HARVEY
Commissioner

May 29, 2018

Ms. Jessica Enzmann
Environmental GIS Analyst
Town of Babylon
200 E. Sunrise Highway
Lindenhurst, NY 11757

Re: DEC
Stormwater Infrastructure Improvements - Carlls River Wetland
151 Phelps Lane, Town of Babylon, Suffolk County, NY
14PR02659

Thank you for requesting the comments of the Division for Historic Preservation of the Office of Parks, Recreation and Historic Preservation (OPRHP). We have reviewed the request for an updated OPRHP sign off letter in accordance with the New York State Historic Preservation Act of 1980 (section 14.09 of the New York Parks, Recreation and Historic Preservation Law). These comments are those of the Division for Historic Preservation and relate only to Historic/Cultural resources. They do not include potential environmental impacts to New York State Parkland that may be involved in or near your project. Such impacts must be considered as part of the environmental review of the project pursuant to the State Environmental Quality Review Act (New York Environmental Conservation Law Article 8) and its implementing regulations (6NYCRR Part 617).

Based upon this review, it is the OPRHP's opinion that your project will continue to have No Impact upon cultural resources in or eligible for inclusion in the State and National Register of Historic Places.

If you have any questions, I can be reached at (518) 268-2179.

Sincerely,

Nancy Herter

Nancy Herter
Archaeology Unit Program Coordinator

NEW YORK STATE DEPARTMENT OF ENVIRONMENTAL CONSERVATION

Division of Fish and Wildlife, New York Natural Heritage Program
625 Broadway, Fifth Floor, Albany, NY 12233-4757
P: (518) 402-8935 | F: (518) 402-8925
www.dec.ny.gov

June 24, 2018

William Bowman
Land Use Ecological Services, Inc.
570 Expressway Drive South, Suite 2F
Medford, NY 11763

Re: Carlls River Watershed Infrastructure Improvements
County: Suffolk Town/City: Babylon

Dear Mr. Bowman:

In response to your recent request, we have reviewed the New York Natural Heritage Program database with respect to the above project.

Enclosed is a report of rare or state-listed animals and plants, and significant natural communities that our database indicates occur at the project site, or in its vicinity.

For most sites, comprehensive field surveys have not been conducted; the enclosed report only includes records from our database. We cannot provide a definitive statement as to the presence or absence of all rare or state-listed species or significant natural communities. Depending on the nature of the project and the conditions at the project site, further information from on-site surveys or other sources may be required to fully assess impacts on biological resources.

Our database is continually growing as records are added and updated. If this proposed project is still under development one year from now, we recommend that you contact us again so that we may update this response with the most current information.

The presence of the plants and animals identified in the enclosed report may result in this project requiring additional review or permit conditions. For further guidance, and for information regarding other permits that may be required under state law for regulated areas or activities (e.g., regulated wetlands), please contact the NYS DEC Region 1 Office, Division of Environmental Permits, as listed at www.dec.ny.gov/about/39381.html.

Sincerely,

Andrea Chaloux

Andrea Chaloux
Environmental Review Specialist
New York Natural Heritage Program

691

The following rare plants, rare animals, and significant natural communities have been documented at the project site, or in its vicinity.

We recommend that potential impacts of the proposed project on these species or communities be addressed as part of any environmental assessment or review conducted as part of the planning, permitting and approval process, such as reviews conducted under SEQR. Field surveys of the project site may be necessary to determine the status of a species at the site, particularly for sites that are currently undeveloped and may still contain suitable habitat. Final requirements of the project to avoid, minimize, or mitigate potential impacts are determined by the lead permitting agency or the government body approving the project.

The following animal, while not listed by New York State as Endangered or Threatened, is of conservation concern to the state, and is considered rare by the New York Natural Heritage Program.

COMMON NAME	*SCIENTIFIC NAME*	*NY STATE LISTING*	*HERITAGE CONSERVATION STATUS*
Birds			
Prothonotary Warbler *Breeding*	*Protonotaria citrea*	Protected Bird	Imperiled in NYS

Belmont, at or very near the project sites at Elda Lake, Sunrise Highway, and Southards Pond, and within 0.5 mile of the project sites at Locust Avenue and Argyle Lake, 2000-05: The birds were found at a riparian stream edge in a red maple-blackgum swamp. The understory vegetation includes sweet pepperbush and cinammon fern. 7785

The following natural community is considered significant from a statewide perspective by the NY Natural Heritage Program. It is either an example of a community type that is rare in the state, or a high-quality example of a more common community type. By meeting specific, documented criteria, the NY Natural Heritage Program considers this community occurrence to have high ecological and conservation value.

COMMON NAME	*SCIENTIFIC NAME*	*NY STATE LISTING*	*HERITAGE CONSERVATION STATUS*
Wetland/Aquatic Communities			
Red Maple-Blackgum Swamp		High-quality Occurrence of Rare Community Type	

Belmont Lake, at or very near the project sites at Elda Lake, Sunrise Highway, and Southards Pond, and within 0.5 mile of the project sites at Locust Avenue and Argyle Lake: A forested swamp of large size with surprisingly few exotic species, located within a landscape that is surrounded by heavy development. Several bridges and culverts have been placed across the stream that flows through the swamp. 8164

The following plant is listed as Endangered by New York State, and is considered rare by the New York Natural Heritage Program, and so is a vulnerable natural resource of conservation concern.

COMMON NAME	*SCIENTIFIC NAME*	*NY STATE LISTING*	*HERITAGE CONSERVATION STATUS*
Vascular Plants			
Sweetbay Magnolia	*Magnolia virginiana var. virginiana*	Endangered	Critically Imperiled in NYS

Belmont Lake South, within 0.5 mile of the project sites at Elda Lake and Sunrise Highway, 2001-06-28: These trees are located within a red maple hardwood swamp on state park property that is surrounded by intense residential development. A narrow stream flows through the wooded sections of the state park. At the point where this stream divides and begins to expand into a large wooded swamp, the magnolia trees begin to appear. Some of the trees are located directly along the edge of a dirt trail. The trees are often multi-trunked and located on super-saturated soil. In most locations, the soil is firm and walkable. The area also seems like it may provide potential habitat for *Populus heterophylla*. 3770

This report only includes records from the NY Natural Heritage database. For most sites, comprehensive field surveys have not been conducted, and we cannot provide a definitive statement as to the presence or absence of all rare or state-listed species. Depending on the nature of the project and the conditions at the project site, further information from on-site surveys or other sources may be required to fully assess impacts on biological resources.

If any rare plants or animals are documented during site visits, we request that information on the observations be provided to the New York Natural Heritage Program so that we may update our database.

Information about many of the rare animals and plants in New York, including habitat, biology, identification, conservation, and management, are available online in Natural Heritage's Conservation Guides at www.guides.nynhp.org, from NatureServe Explorer at www.natureserve.org/explorer, and from USDA's Plants Database at http://plants.usda.gov/index.html (for plants).

Information about many of the natural community types in New York, including identification, dominant and characteristic vegetation, distribution, conservation, and management, is available online in Natural Heritage's Conservation Guides at www.guides.nynhp.org. For descriptions of all community types, go to www.dec.ny.gov/animals/97703.html for Ecological Communities of New York State.

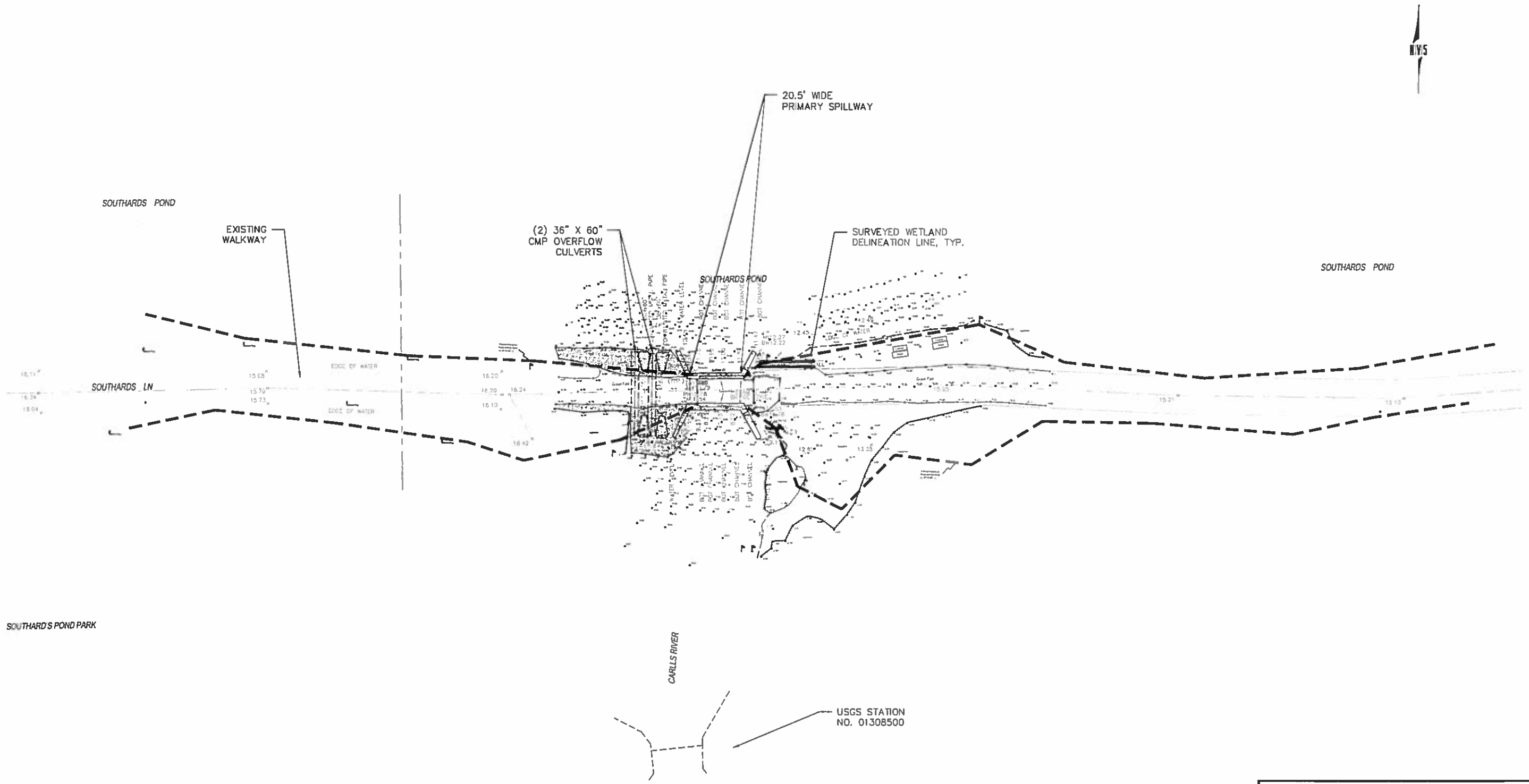

GRAPHIC SCALE

20 0 10 20 40 80

(IN FEET)
1 INCH = 20 FT.

DESIGNED BY: _____

CHECKED BY: _____

DRAWN BY: _____

COMPARED BY: _____

SYMBOL	DESCRIPTION	APPROVED	DATE

REVISIONS

NV5

40 MARCUS DRIVE, SUITE 201
MELVILLE, NEW YORK 11747
P: 631.891.3200 WWW.NV5.COM

CARLLS RIVER WATERSHED PROJECT
DRAFT PROGRESS PLANS

EXISTING CONDITIONS PLAN
LOCATION #3 – SOUTHARDS POND

PROJECT NO.	SCALE	DWG. NO	SHEET NO.
728518-0000340	1"=20'	EX-L03	X OF X

S:\Project\728518-0000340.00-Carlls River Watershed Design Project\Technical\Cadd\Plan Sheets\08-01-Existing Conditions Plans - Location 3.dwg

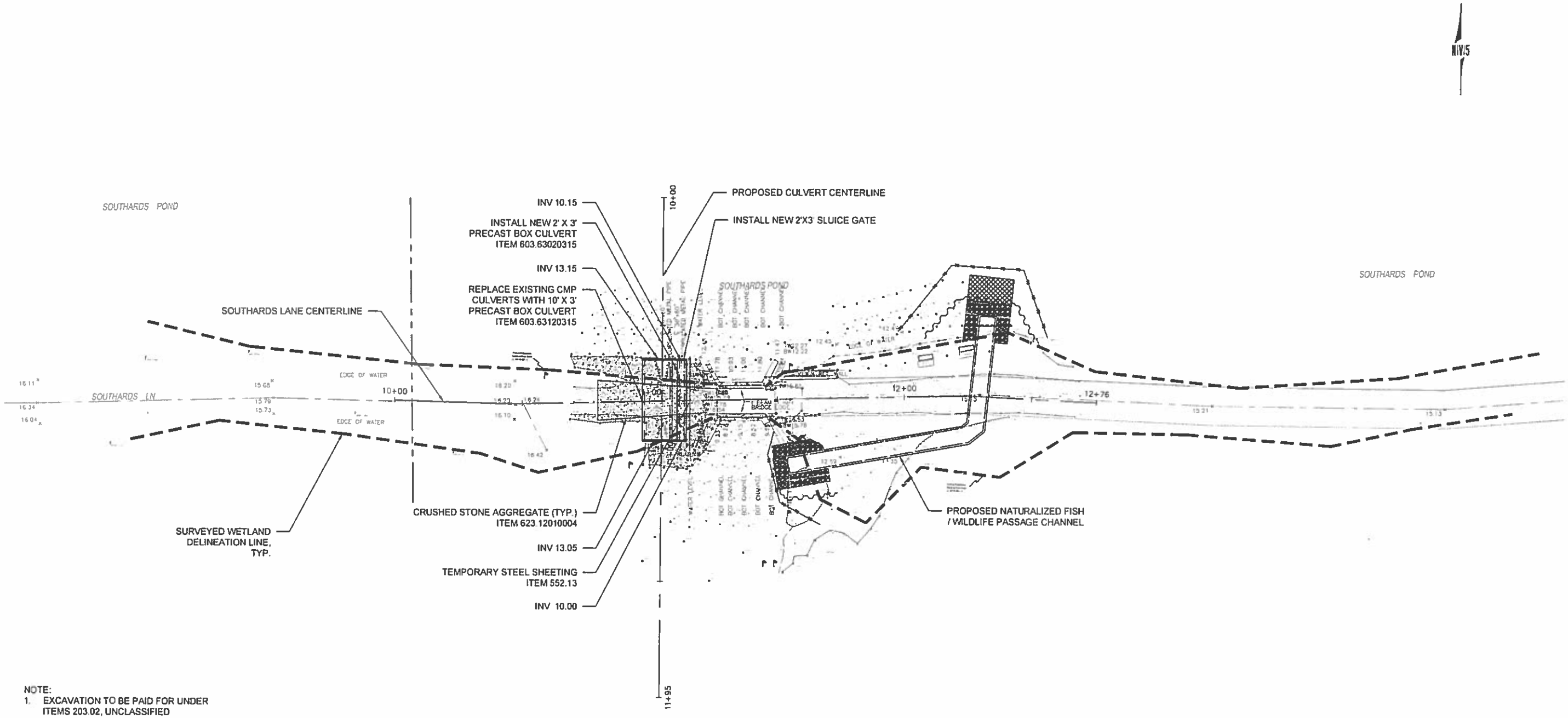

NOTE:
1. EXCAVATION TO BE PAID FOR UNDER ITEMS 203.02, UNCLASSIFIED EXCAVATION AND 206.0201, TRENCH AND CULVERT EXCAVATION
2. USE COFFERDAM TO KEEP EXCAVATION FREE FROM WATER DURING CULVERT INSTALLATION.ITEM 553.020001

GRAPHIC SCALE

20 0 10 20 40 60

(IN FEET)
1 INCH = 20 FT.

DESIGNED BY: _____
CHECKED BY: _____
DRAWN BY: _____
COMPARED BY: _____

SYMBOL	DESCRIPTION	APPROVED	DATE

REVISIONS

NIV5
40 MARCUS DRIVE, SUITE 201
MELVILLE, NEW YORK 11747
P: 631.691.3200 WWW.NIV5.COM

CARLLS RIVER WATERSHED PROJECT
DRAFT PROGRESS PLANS

CONSTRUCTION PLAN
LOCATION #3 - SOUTHARDS POND

PROJECT NO.	SCALE	DWG. NO	SHEET NO.
728518-0000340	1"=20'	CP-L03	X OF X

S:\Project\728518-0000340.00-Carlls River Watershed Design Project\Technical\Cadd\Plan Sheets\06-02-Construction Plans - Location 3.dwg

LOCATION #3 PROFILE

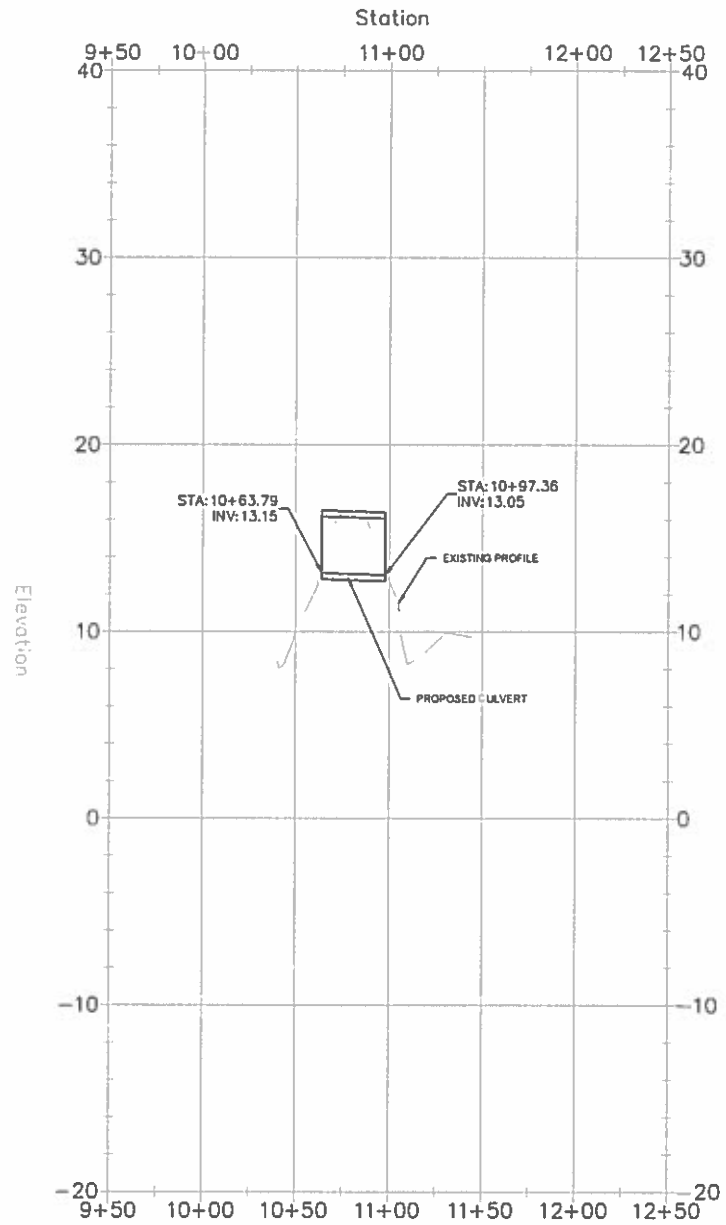

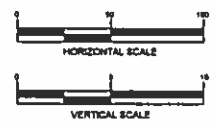

DESIGNED BY: _____

CHECKED BY: _____

DRAWN BY: _____

COMPARED BY: _____

SYMBOL	DESCRIPTION	APPROVED	DATE

REVISIONS

NV5

40 MARCUS DRIVE, SUITE 201
MELVILLE, NEW YORK 11747
P: 631.691.3200 WWW.NV5.COM

CARLLS RIVER WATERSHED PROJECT
DRAFT PROGRESS PLANS

PROFILE
LOCATION #3 – SOUTHARDS POND

PROJECT NO.	SCALE	DWG. NO	SHEET NO.
726518-0000340	–	PR-03	X OF X

S:\Project\726518-0000340.00-Carlls River Watershed Design Project\Technical\Cadd\Plan Sheets\08-05-Profiles – Location 3.dwg

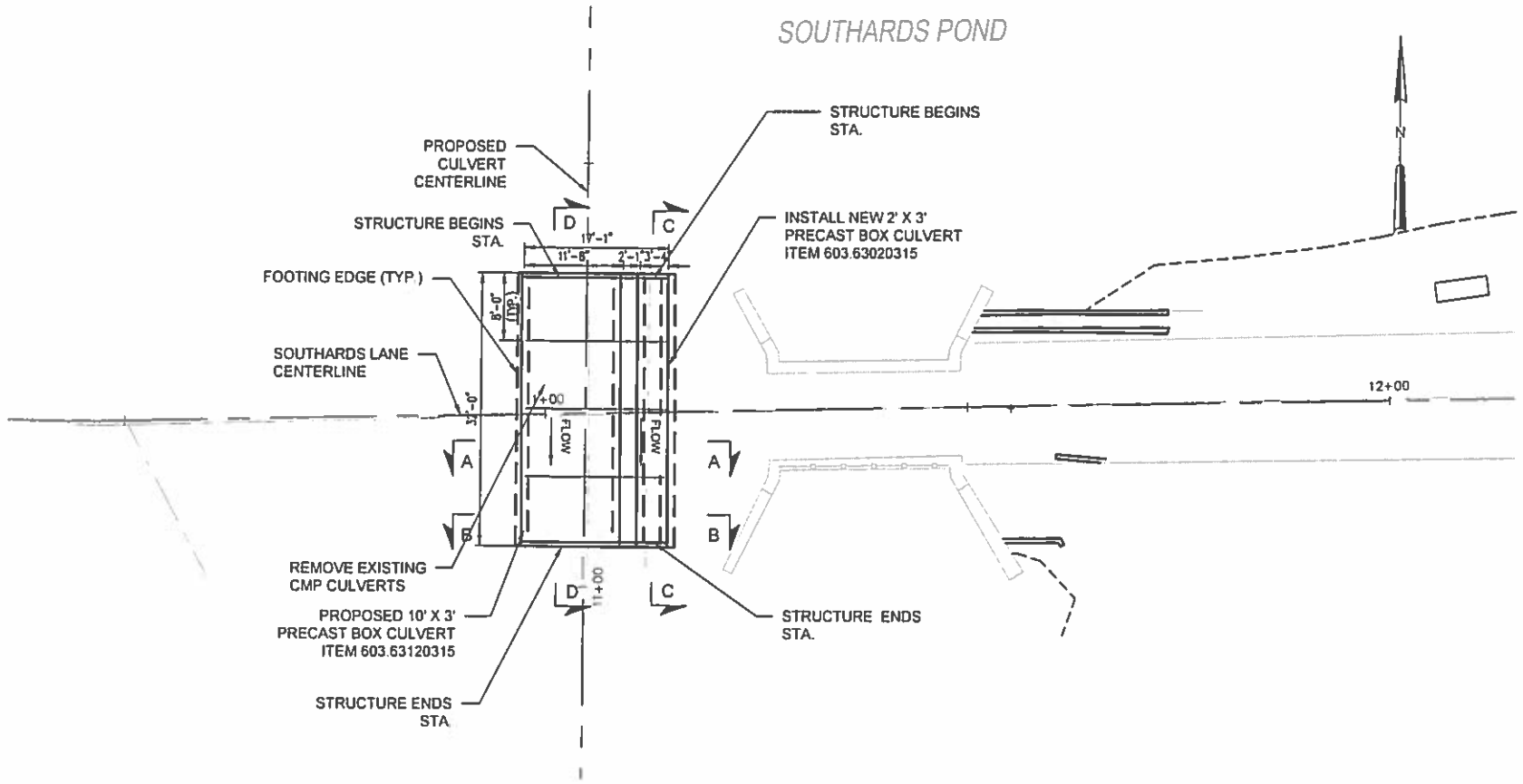

PLAN

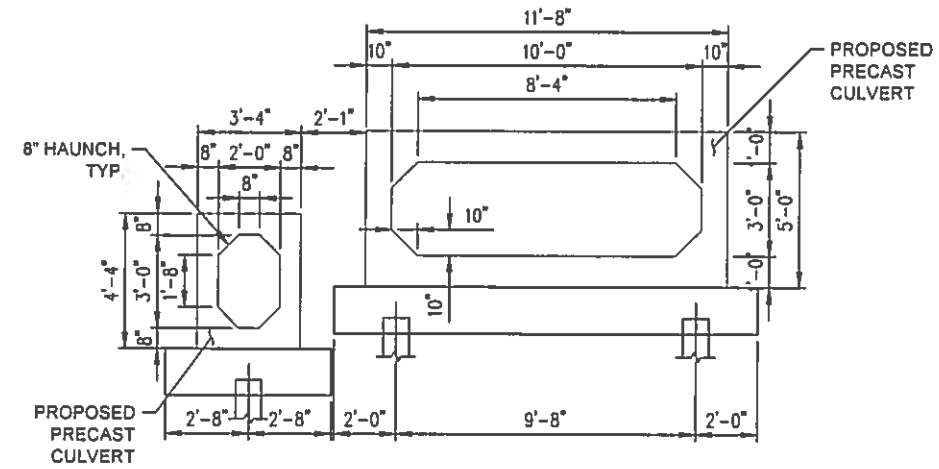

CULVERT SECTION A-A

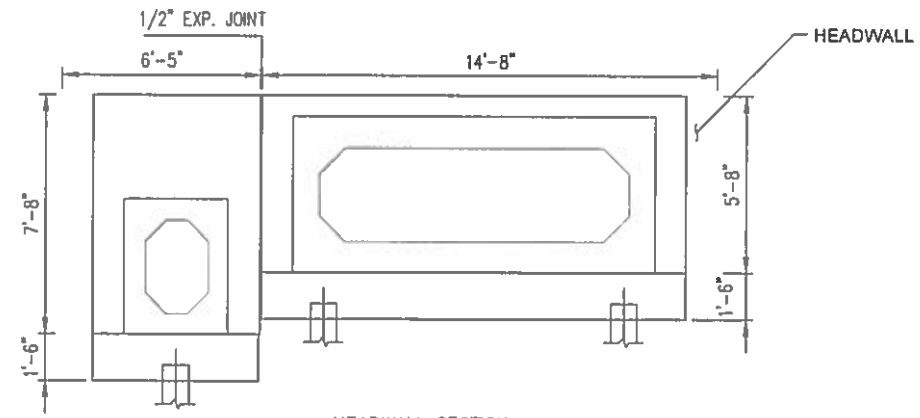

HEADWALL SECTION B-B

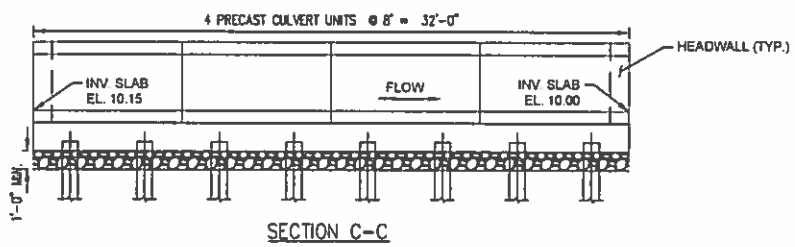

SECTION C-C

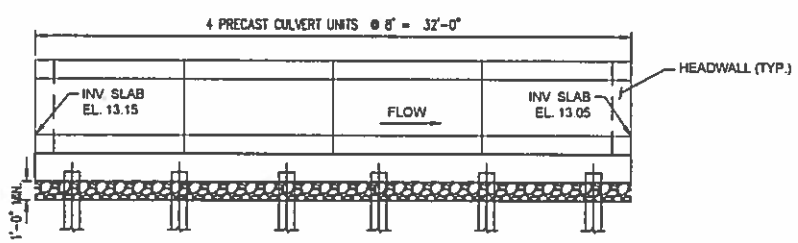

ELEVATION D-D

DESIGNED BY: _____

CHECKED BY: _____

DRAWN BY: _____

COMPARED BY: _____

SYMBOL	DESCRIPTION	APPROVED	DATE

REVISIONS

N|V|5

40 MARCUS DRIVE, SUITE 201
MELVILLE, NEW YORK 11747
P: 631.891.3200 WWW.NV5.COM

CARLLS RIVER WATERSHED PROJECT
DRAFT PROGRESS PLANS

STRUCTURAL PLAN
LOCATION #3 - SOUTHARDS POND

PROJECT NO.	SCALE	DWG. NO	SHEET NO.
728518-0000340		CP-L03	X OF X

S:\Project\728518-0000340.00-Carlls River Watershed Design Project\Technical\Cadd\Plan Sheets\05-03-Structural Plans - Location 3.dwg

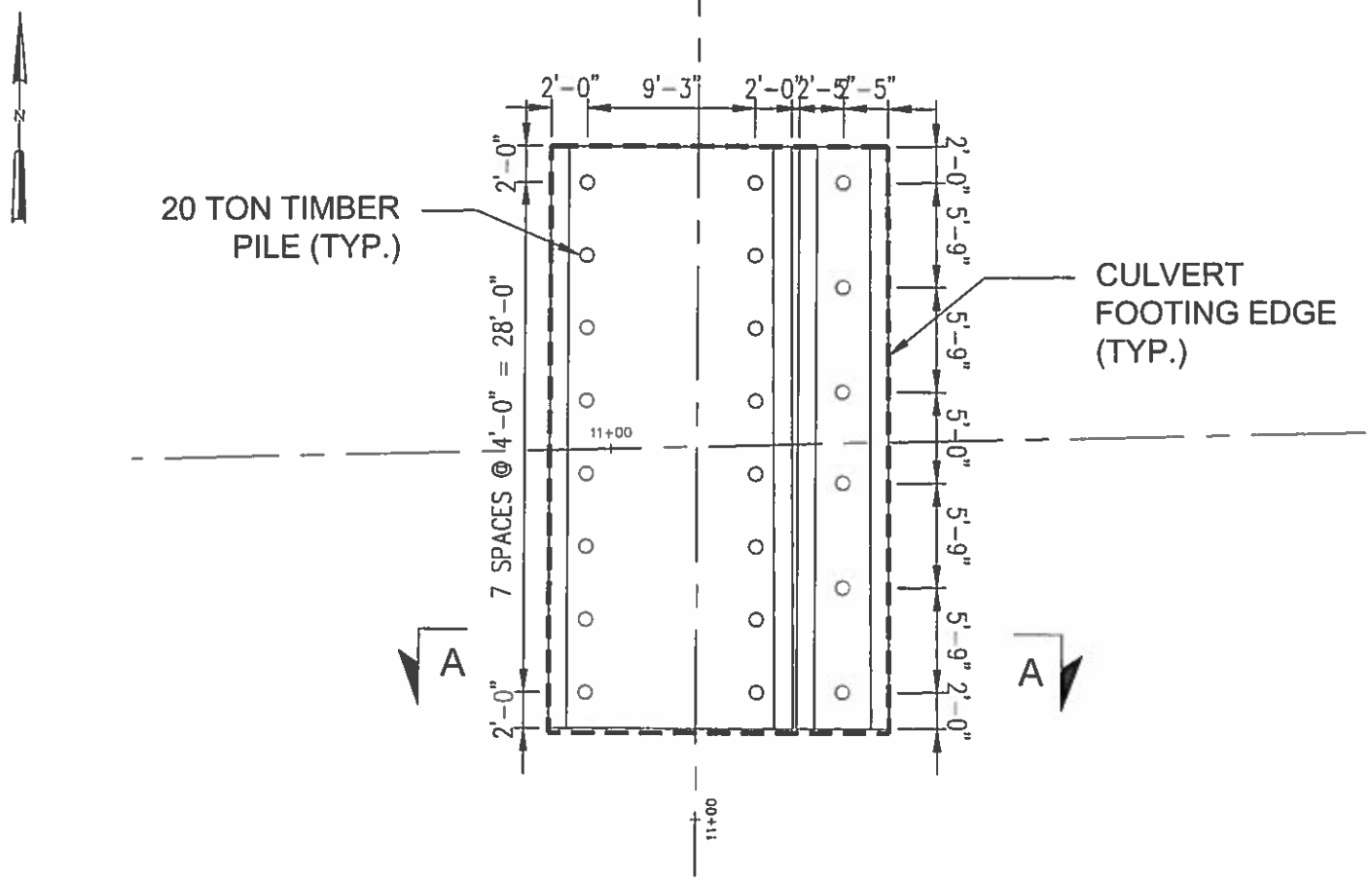

PILE LAYOUT PLAN

PILE TABLE			
PILE NO.	LENGTH BELOW CUT-OFF	PILE NO.	LENGTH BELOW CUT-OFF

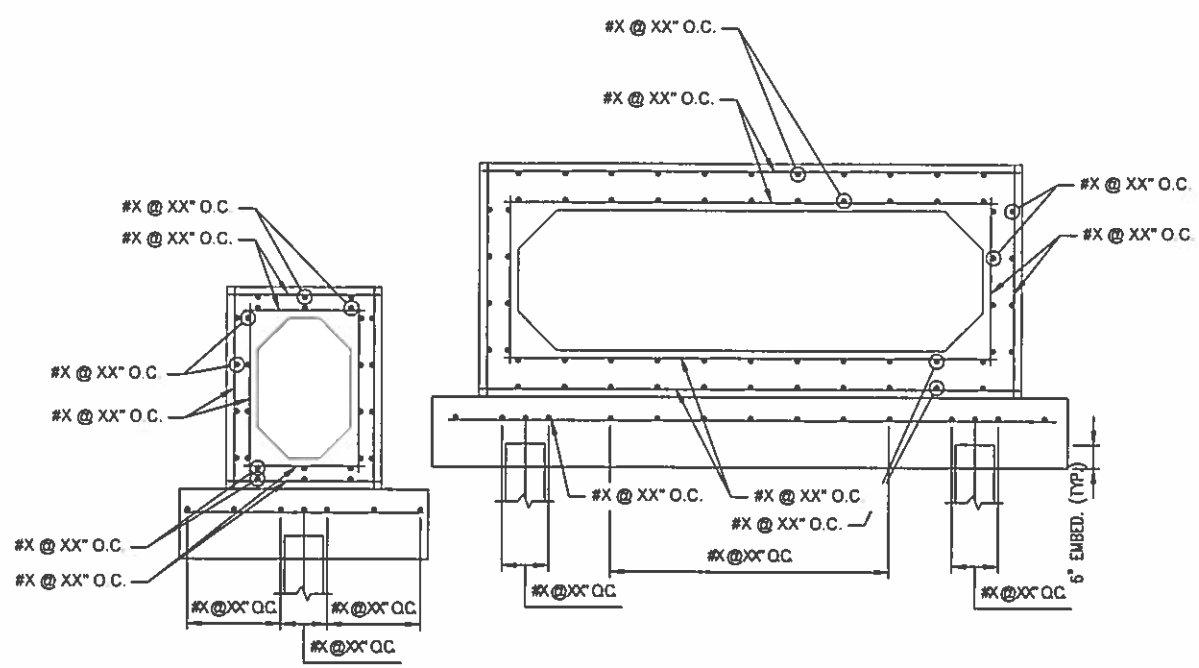

SECTION B-B

DESIGNED BY: _____
CHECKED BY: _____
DRAWN BY: _____
COMPARED BY: _____

SYMBOL	DESCRIPTION	APPROVED	DATE

REVISIONS

NV5
40 MARCUS DRIVE, SUITE 201
MELVILLE, NEW YORK 11747
P: 631.691.3200 WWW.NV5.COM

CARLLS RIVER WATERSHED PROJECT
DRAFT PROGRESS PLANS

STRUCTURAL PLAN
LOCATION #3 – SOUTHARDS POND

PROJECT NO.	SCALE	DWG. NO	SHEET NO.
728518-0000340		CP-L03	X OF X

S:\Project\728518-0000340.00-Carlls River Watershed Design Project\Technical\Cadd\Plan Sheets\08-04-Reinforcement Plans - Location 3.dwg

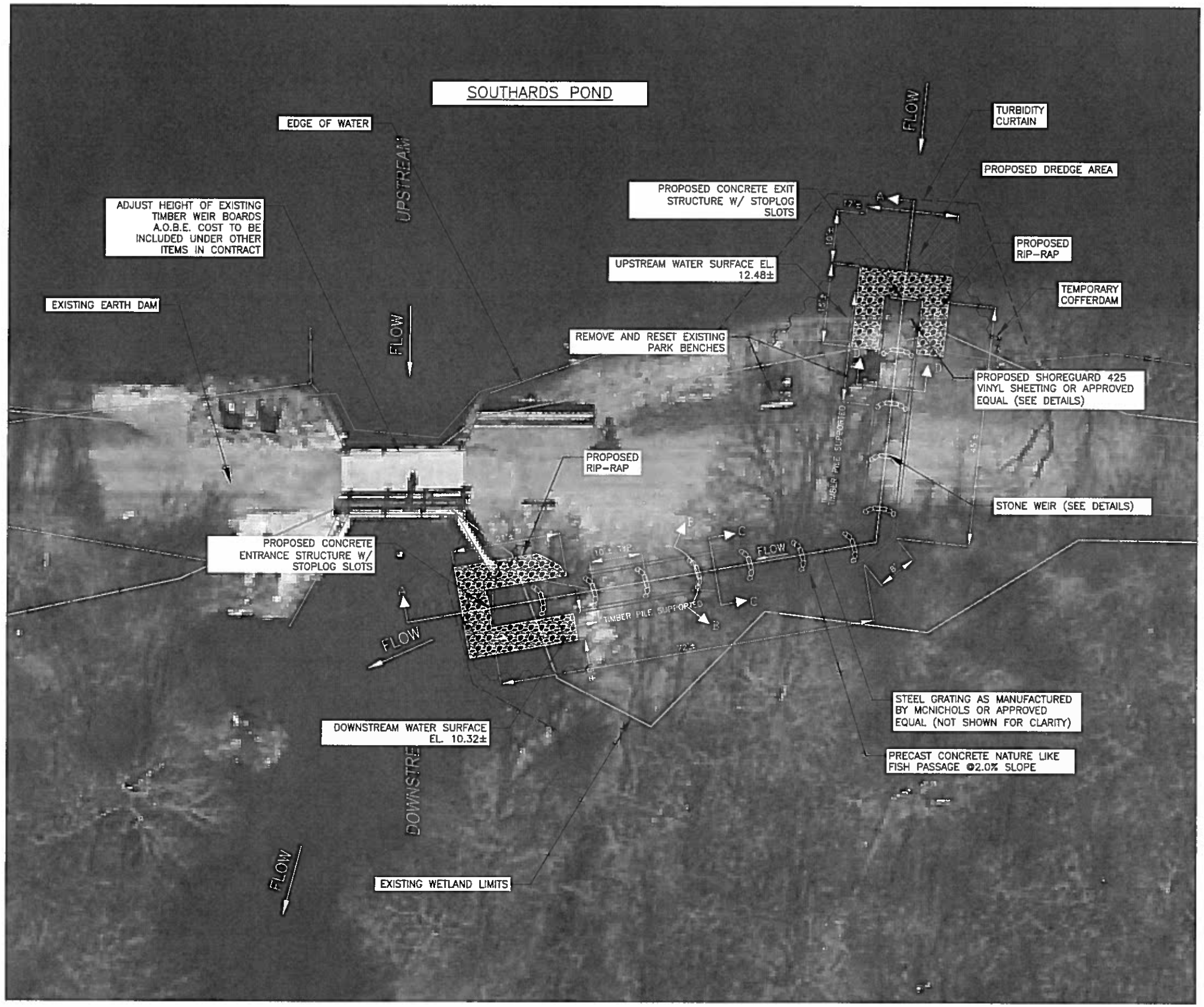

NORTH

NOTES:
1. SEE PROFILE AND FISH PASSAGE DETAILS FOR INFORMATION NOT SHOWN.
2. STEEL GRATE ON TOP OF FISH PASSAGE NOT SHOWN FOR CLARITY (SEE DETAILS).
3. CONTRACTOR SHALL USE TURBIDITY CURTAIN DURING CONSTRUCTION OF THE FISH PASSAGE.
4. EXISTING TREES AND BRUSH SHALL BE REMOVED FROM THE DAM AS REQUIRED BY THE NYSDEC.
5. ALL PROPOSED CONNECTIONS BETWEEN PRECAST CONCRETE FISH PASSAGE SHALL HAVE WATER TIGHT JOINTS.
6. CLEARING SHALL BE MINIMIZED TO THE GREATEST EXTENT POSSIBLE. ALL CLEARED AND DISTURBED AREAS AS SHOWN ON THE PLAN SHALL BE REPLANTED WITH HYDROSEEDING AND NATIVE, WET TOLERANT, 3 GALLON SHRUBS PLANTED NO LESS DENSE THAN 6 FEET ON CENTER.
7. THE CONTRACTOR SHALL BE AWARE THAT DEWATERING MAY BE NECESSARY DURING THE INSTALLATION OF THE PROPOSED FISH PASSAGE DUE TO THE HIGH GROUNDWATER TABLE. THERE WILL BE NO ADDITIONAL PAY ITEMS FOR DEWATERING. COST TO BE INCLUDED UNDER OTHER ITEMS IN CONTRACT.

GRAPHIC SCALE
10 0 5 10 20 30
(IN FEET)
1 INCH = 10 FT.

DATE	BY	DESCRIPTION	APPROV. BY

REVISIONS

TOWN OF BABYLON
SUFFOLK COUNTY, NEW YORK

CARLLS RIVER

SOUTHARDS POND
CONCEPTUAL PLAN

L. K. McLEAN ASSOCIATES, P.C.
CONSULTING ENGINEERS 437 SOUTH COUNTRY RD., BROOKHAVEN, NEW YORK 11719

Designed By: KJM	Scale: AS NOTED	DRAWING	
Drawn By: RTN	Date: AUGUST 2018	2 of 4	
Approved By: RAS	File No.: 18052.000		

Aug 17, 2018 - 09:31am
P:\18052.000 Carlls River\Civil DWG\Contract Drawings\General Plans.dwg

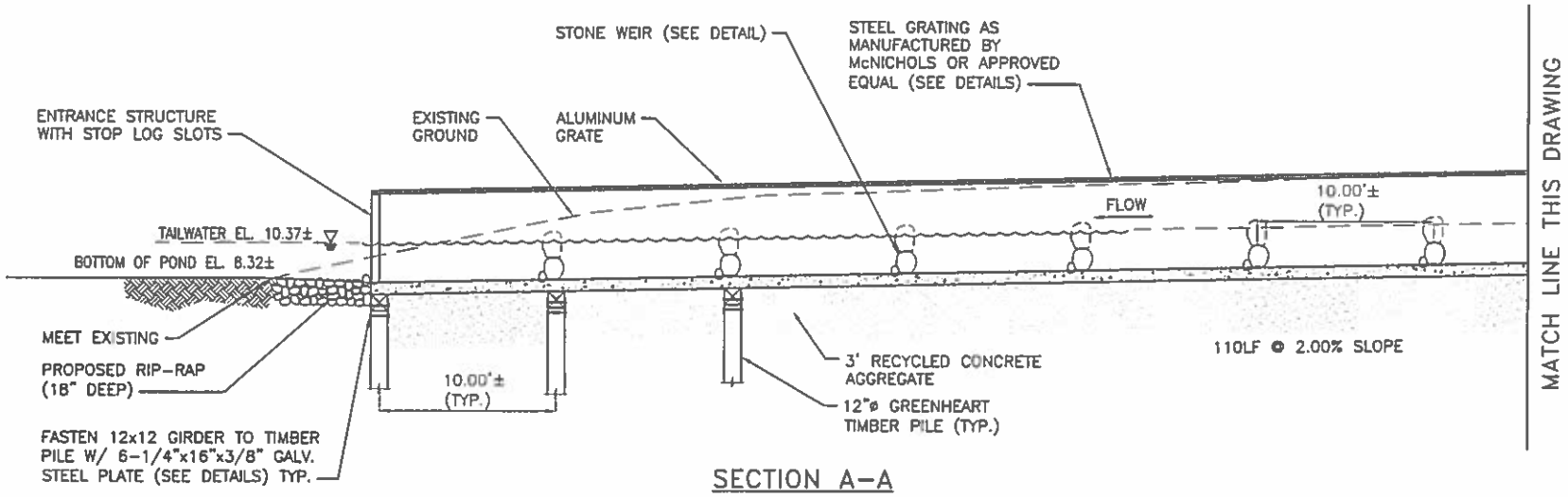

SECTION A-A
NATURE-LIKE FISH PASSAGE
SCALE 1"=5'

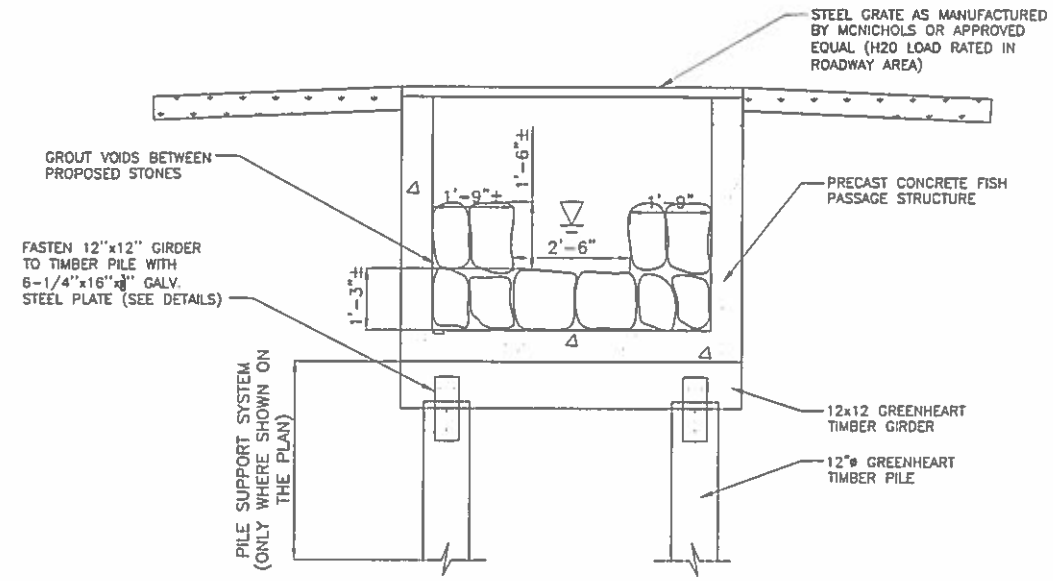

SECTION B-B
N.T.S.

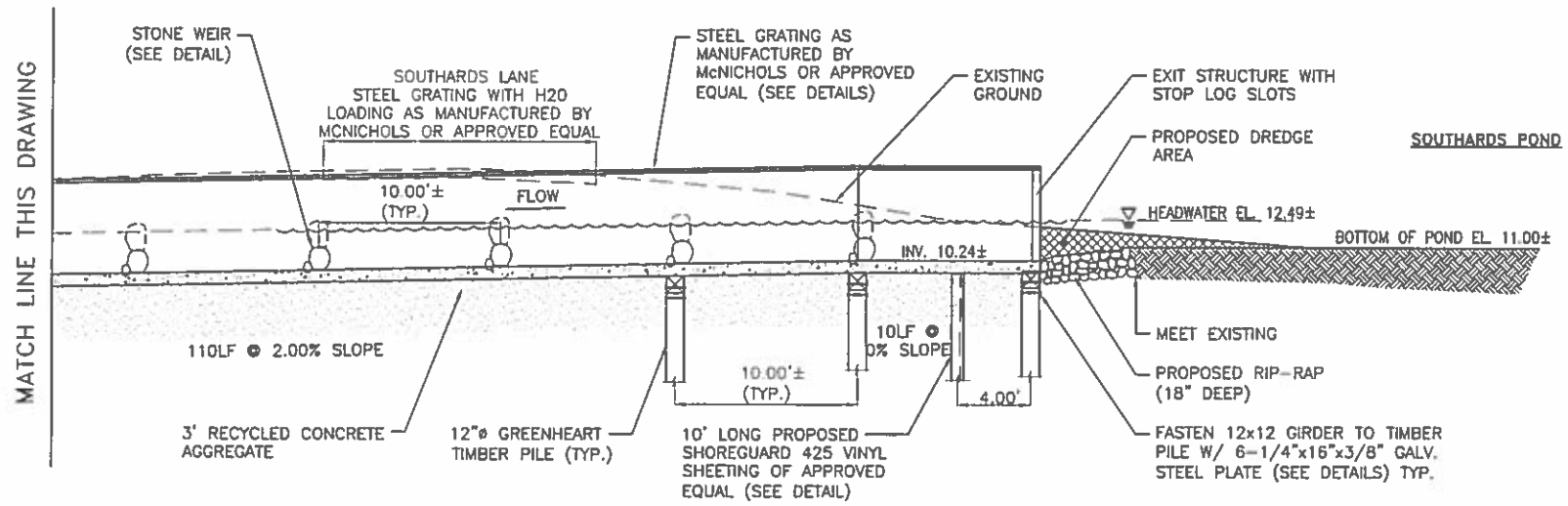

SECTION A-A
NATURE-LIKE FISH PASSAGE
SCALE 1"=5'

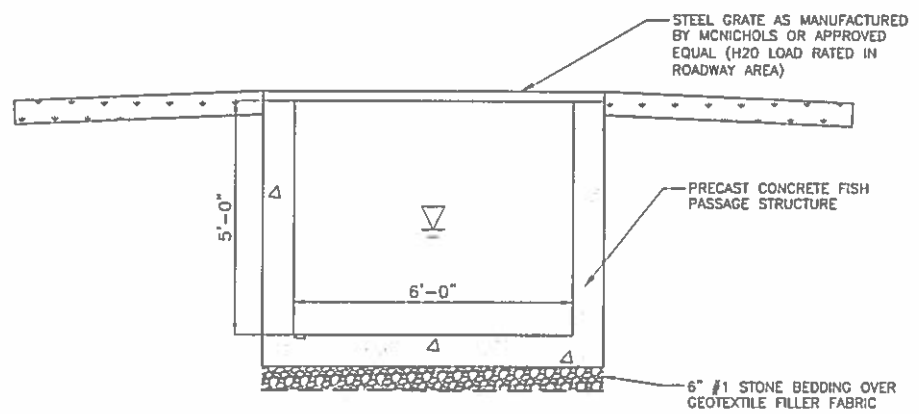

SECTION C-C
N.T.S.

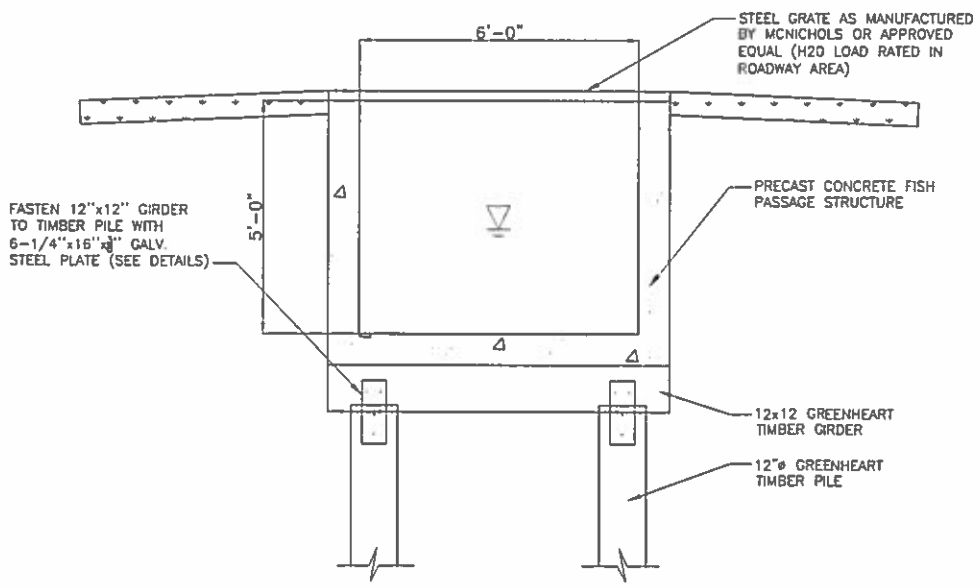

SECTION D-D
N.T.S.

DATE	BY	DESCRIPTION	APPROV. BY

REVISIONS

TOWN OF BABYLON
SUFFOLK COUNTY, NEW YORK

CARLLS RIVER

SOUTHARDS POND
FISH PASSAGE DETAILS

L. K. McLEAN ASSOCIATES, P.C.
CONSULTING ENGINEERS 437 SOUTH COUNTRY RD., BROOKHAVEN, NEW YORK 11719

Designed By: KJM	Scale: AS NOTED	DRAWING	
Drawn By: RTN	Date: AUGUST 2018	4 of 4	
Approved By: RAS	File No: 18052.000		

Aug 17, 2018 - 09:36am
P:\18052.000 Carlls River\Civil DWG\Contract Drawings\Southards Pond fish passage details.dwg

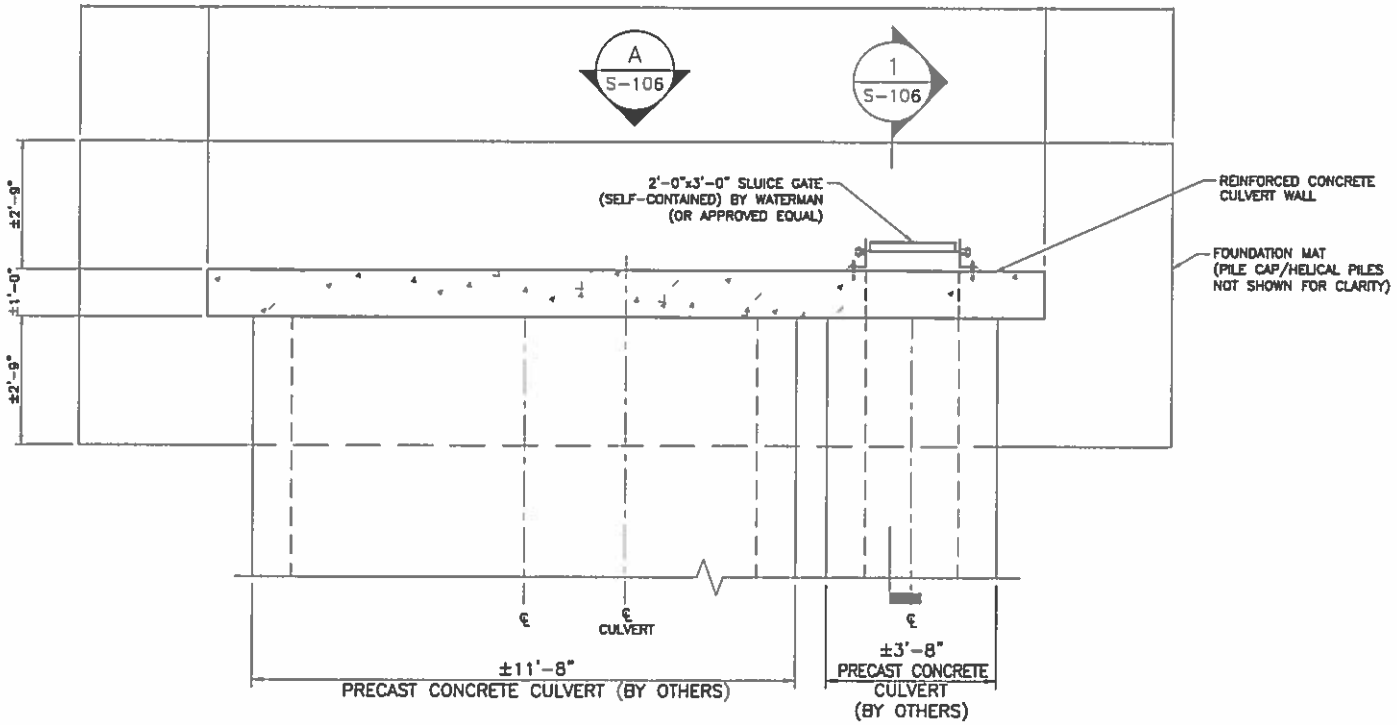

1 CULVERT, WING WALL & SLUICE GATE PLAN
SOUTHARDS POND
3/8" = 1'-0"

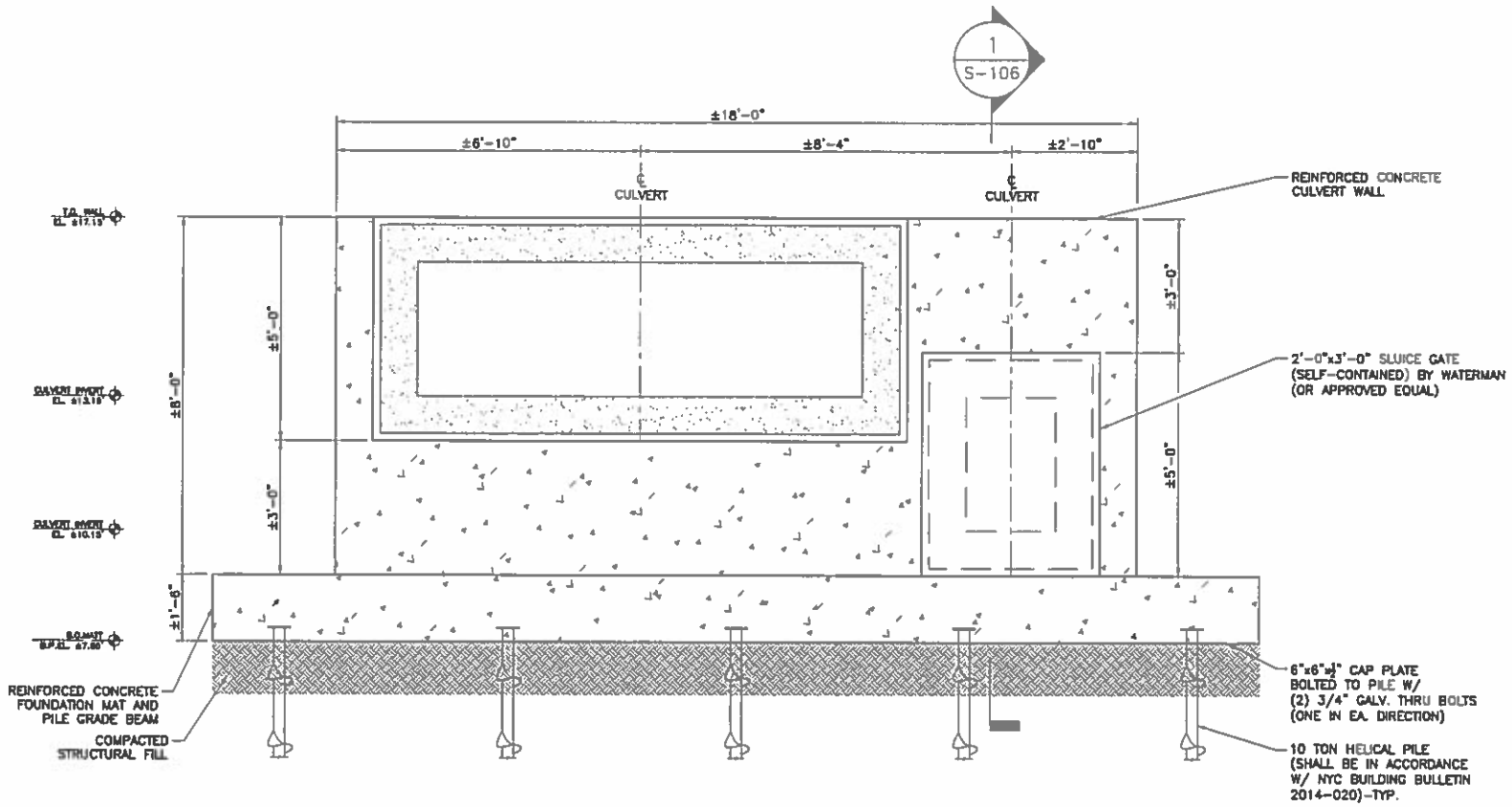

A ELEVATION (SOUTHARDS POND)
3/8" = 1'-0"

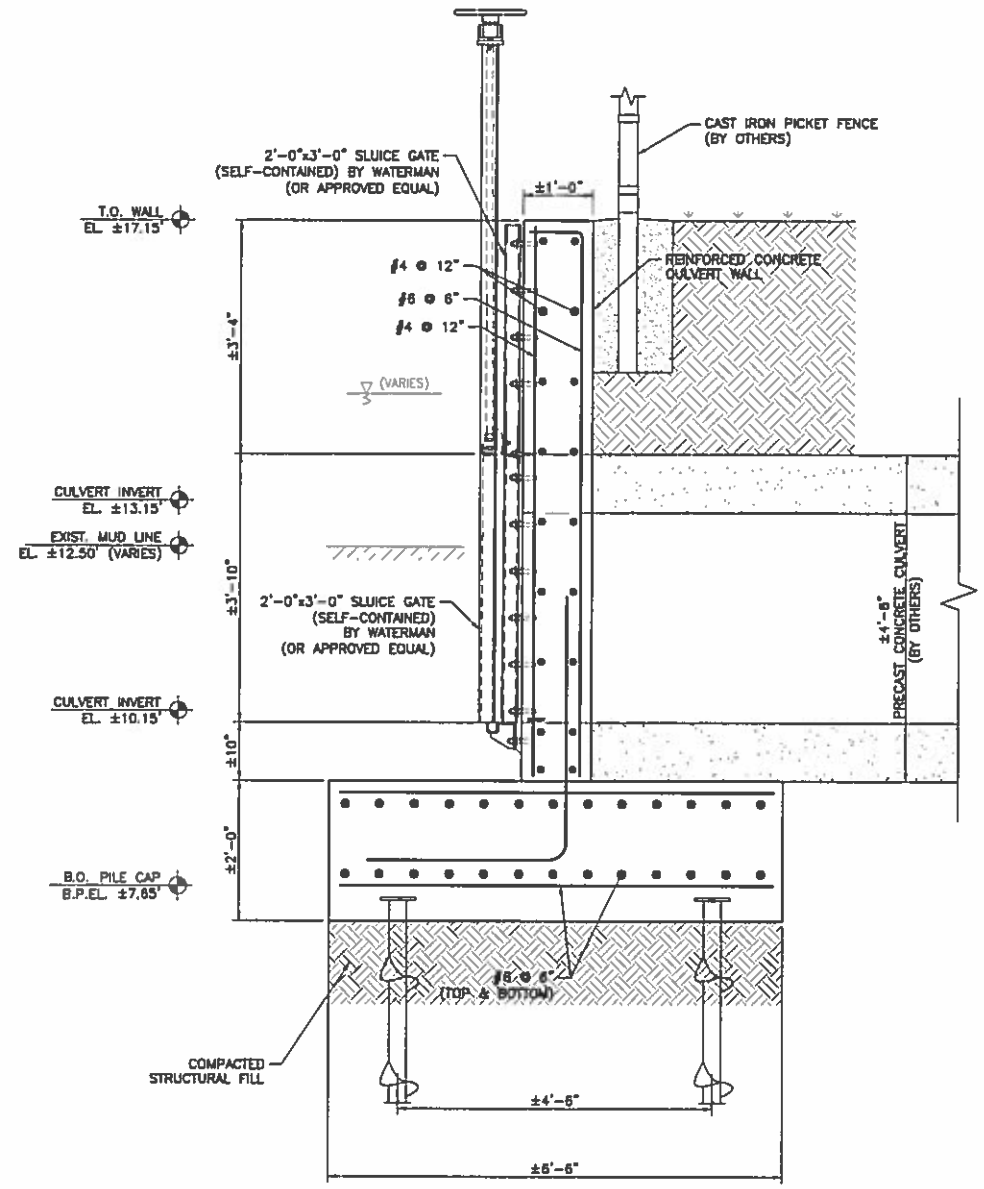

1 SECTION
1/2" = 1'-0"

DESIGNED BY: _____
CHECKED BY: _____
DRAWN BY: _____
COMPARED BY: _____

SYMBOL	DESCRIPTION	APPROVED	DATE

REVISIONS

NV5
40 MARCUS DRIVE, SUITE 201
MELVILLE, NEW YORK 11747
P: 631.691.3200 WWW.NV5.COM

CARLLS RIVER WATERSHED PROJECT
30% DRAFT PLANS

SLUICE GATE DETAILS
LOCATION #3 - SOUTHARDS POND

PROJECT NO.	SCALE	DWG NO	SHEET NO.
728518-0000340		S-106	OF X

\\H2-FS\ntdata$\Projects\18-0328_Carlls River Watershed_NYS\DESIGN\CAD DRAWINGS\24x36_Carll River_Sluice Design_Final.dwg

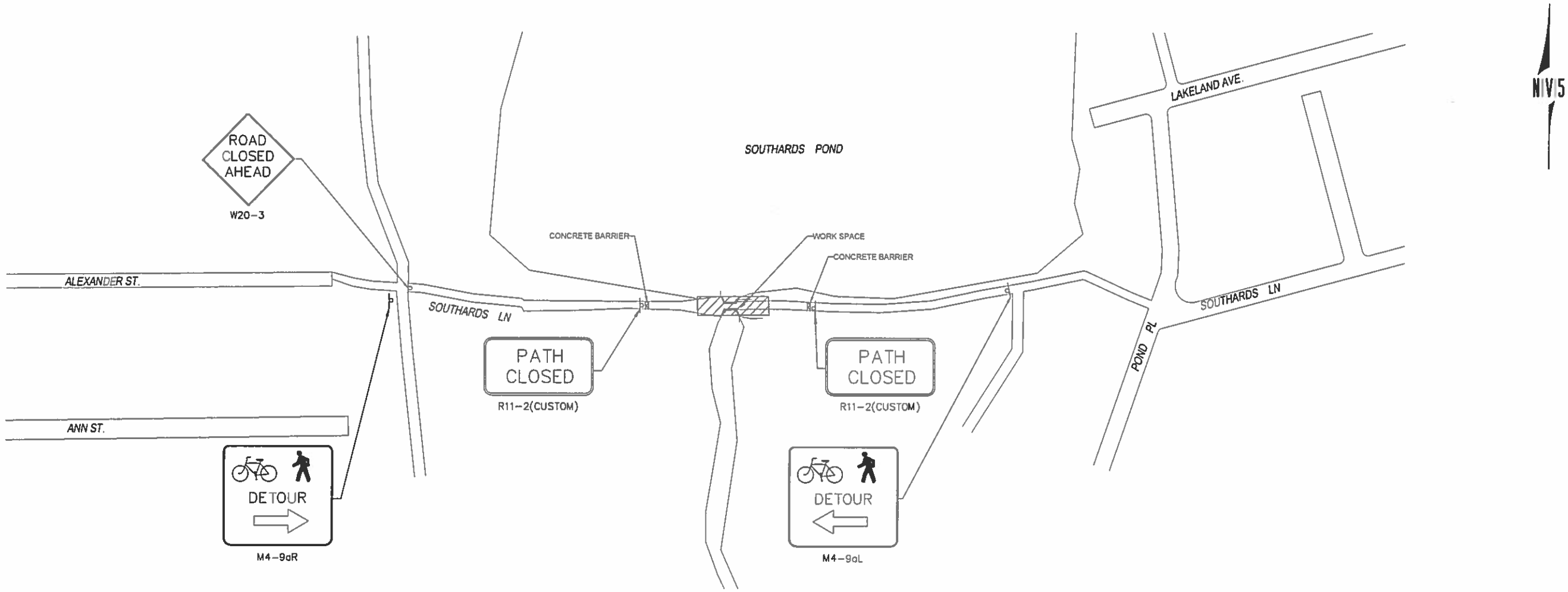

DESIGNED BY: _____

CHECKED BY: _____

DRAWN BY: _____

COMPARED BY: _____

SYMBOL	DESCRIPTION	APPROVED	DATE

REVISIONS

NV5

40 MARCUS DRIVE, SUITE 201
MELVILLE, NEW YORK 11747
P: 631.691.3200 WWW.NV5.COM

CARLLS RIVER WATERSHED PROJECT
DRAFT PROGRESS PLANS

WORK ZONE TRAFFIC CONTROL PLAN
LOCATION #3 – SOUTHARDS POND

PROJECT NO.	SCALE	DWG. NO	SHEET NO.
726518-0000340	1"=100'	WZTC-03	X OF X

S:\Project\726518-0000340.00-Carlls River Watershed Design Project\Technical\Cadd\Plan Sheets\06-07-WZTC & Staging - Location 3.dwg

STAGING NOTES

STAGE ONE: PROJECT SETUP AND CLEARING AND GRUBBING
1. PERFORM SURVEY AND CONSTRUCTION LAYOUT.
2. PERFORM CLEARING AND GRUBBING.

STAGE TWO: CULVERT INSTALLATION
1. CONTRACTOR WILL CLOSE THIS SECTION OF THE PARK PATH TO PEDESTRIAN TRAFFIC AND DIVERT PEDESTRIAN TRAFFIC TO THE MAIN SIDEWALK.
2. INSTALL COFFERDAM
3. PERFORM EXCAVATION
4. INSTALL CULVERT

STAGE THREE: PARK WALKWAY
1. SAWCUT, INSTALL RCA PATHWAY, CONCRETE SIDEWALK, AND TOPSOIL & SEED.

S:\Project\728518-0000340.00-Carlls River Watershed Design Project\Technical\Cadd\Plan Sheets\05-07-WZTC & Staging - Location 3.dwg

DESIGNED BY: _____
CHECKED BY: _____
DRAWN BY: _____
COMPARED BY: _____

SYMBOL	DESCRIPTION	APPROVED	DATE

REVISIONS

NV5

40 MARCUS DRIVE, SUITE 201
MELVILLE, NEW YORK 11747
P: 631.891.3200 WWW.NV5.COM

CARLLS RIVER WATERSHED PROJECT
DRAFT PROGRESS PLANS

STAGING NOTES
LOCATION #3 – SOUTHARDS POND

PROJECT NO.	SCALE	DWG. NO	SHEET NO.
728518-0000340	N/A	SN-05	X OF X

DESIGNED BY: _____

CHECKED BY: _____

DRAWN BY: _____

COMPARED BY: _____

GRAPHIC SCALE

20 0 10 20 40 60

(IN FEET)
1 INCH = 20 FT.

SYMBOL	DESCRIPTION	APPROVED	DATE

REVISIONS

N|V|5

40 MARCUS DRIVE, SUITE 201
MELVILLE, NEW YORK 11747
P: 631.891.3200 WWW.NV5.COM

CARLLS RIVER WATERSHED PROJECT
30% DRAFT PLANS

EXISTING CONDITIONS PLAN
LOCATION #2 – ELDA LAKE

PROJECT NO.	SCALE	DWG. NO	SHEET NO.
728518-0000340	1"=20'	EX-L02	X OF X

S:\Project\728518-0000340.00-Carlls River Watershed Design Project\Technical\Cadd\Plan Sheets\04-Existing Conditions Plans.dwg

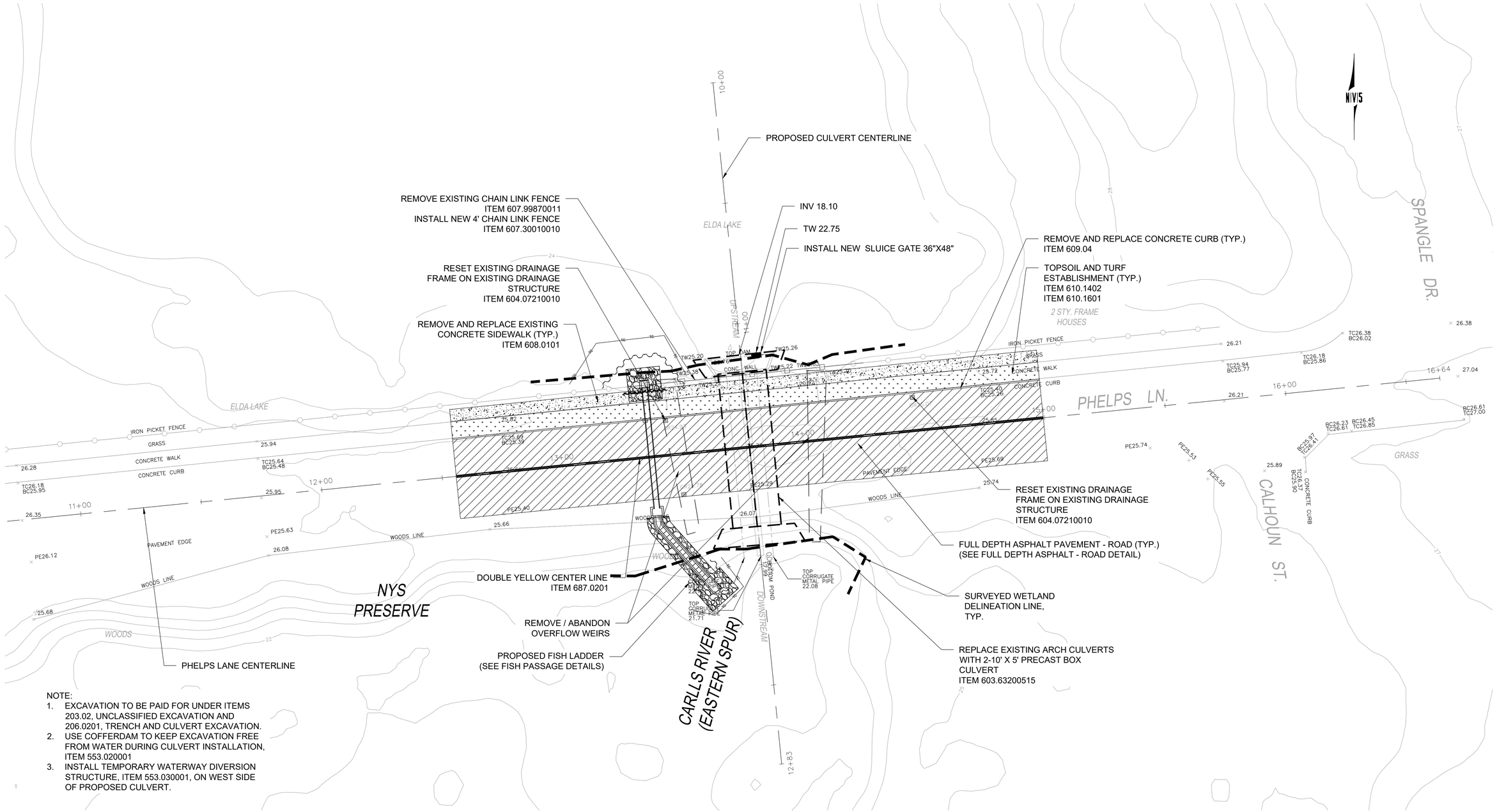

NOTE:

1. EXCAVATION TO BE PAID FOR UNDER ITEMS 203.02, UNCLASSIFIED EXCAVATION AND 206.0201, TRENCH AND CULVERT EXCAVATION.
2. USE COFFERDAM TO KEEP EXCAVATION FREE FROM WATER DURING CULVERT INSTALLATION, ITEM 553.020001
3. INSTALL TEMPORARY WATERWAY DIVERSION STRUCTURE, ITEM 553.030001, ON WEST SIDE OF PROPOSED CULVERT.

DESIGNED BY: _____

CHECKED BY: _____

DRAWN BY: _____

COMPARED BY: _____

GRAPHIC SCALE

20 0 10 20 40 60

(IN FEET)
1 INCH = 20 FT.

SYMBOL	DESCRIPTION	APPROVED	DATE

REVISIONS

NV5

40 MARCUS DRIVE, SUITE 201
MELVILLE, NEW YORK 11747
P: 631.891.3200 WWW.NV5.COM

CARLLS RIVER WATERSHED PROJECT
30% DRAFT PLANS

CONSTRUCTION PLAN
LOCATION #2 – ELDA LAKE

PROJECT NO.	SCALE	DWG. NO	SHEET NO.
728518-0000340	1"=20'	CP-L02	X OF X

S:\Project\728518-0000340.00-Carlls River Watershed Design Project\Technical\Cadd\Plan Sheets\05-Construction Plans.dwg

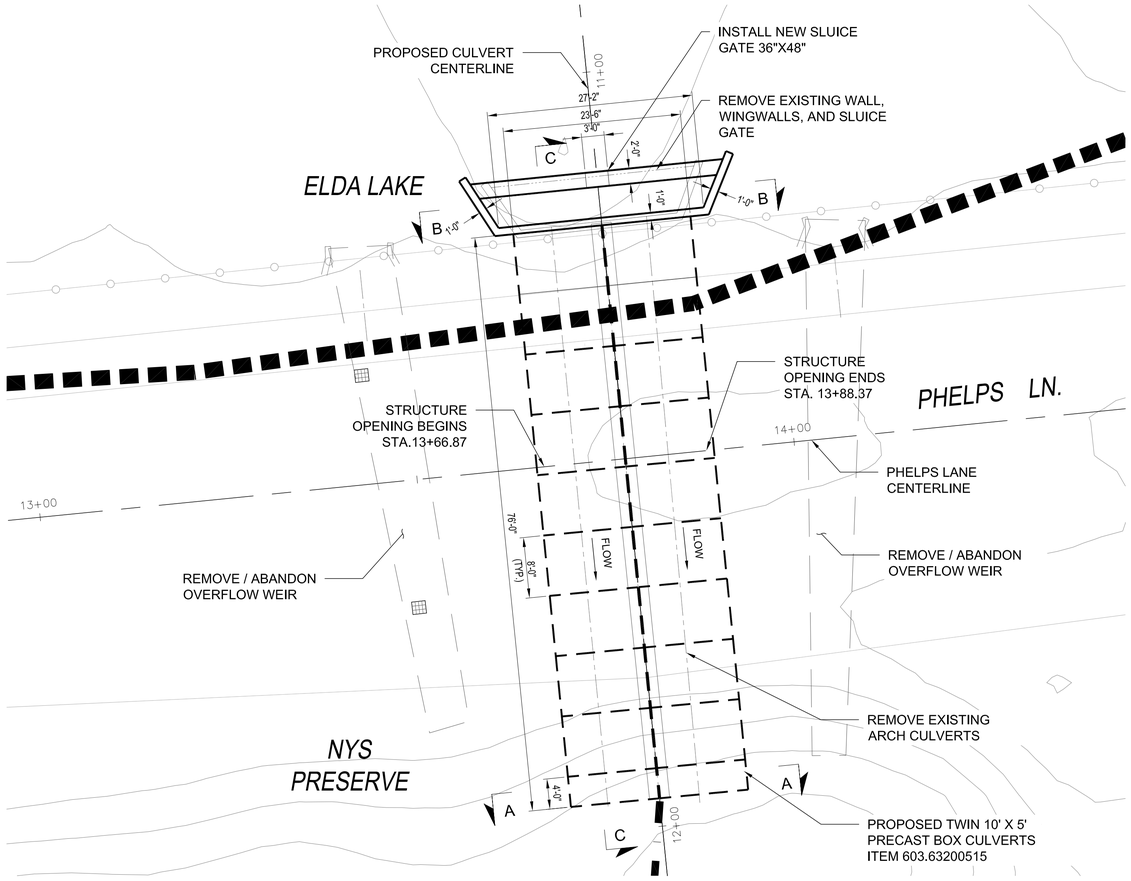

PLAN

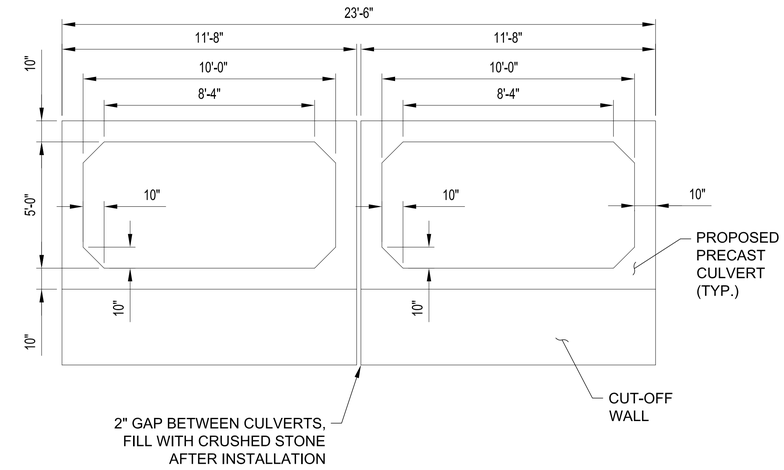

SECTION A-A

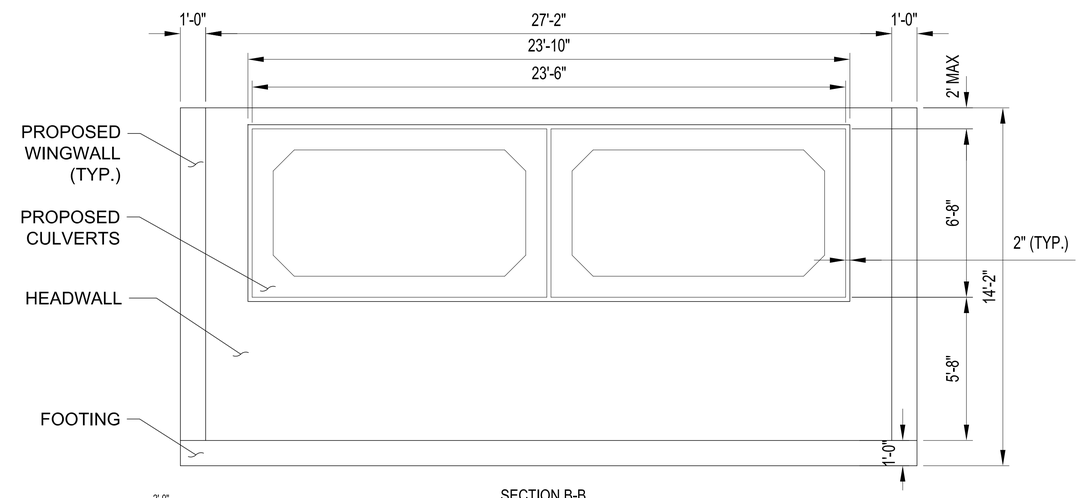

SECTION B-B

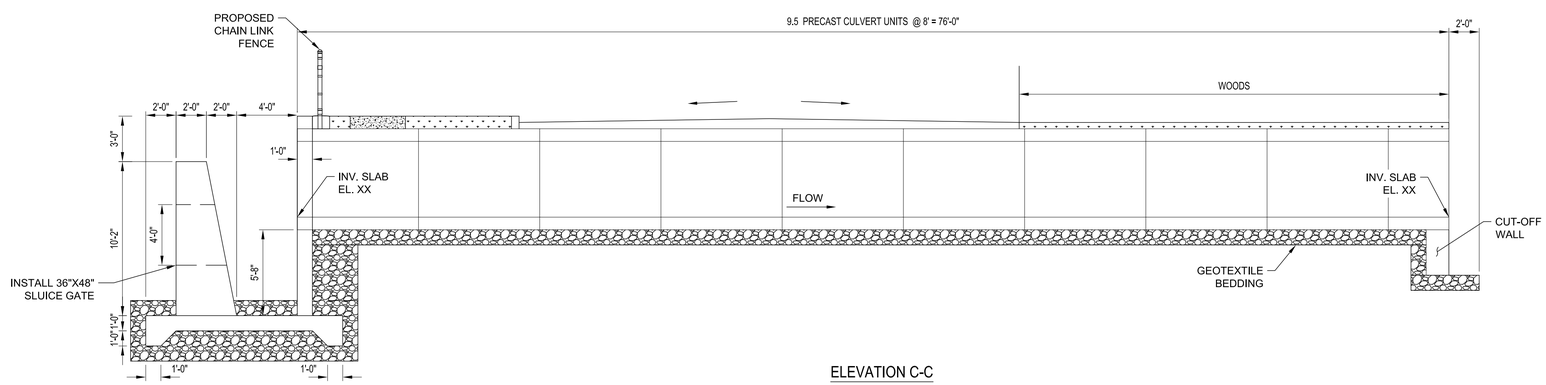

ELEVATION C-C

DESIGNED BY: _____

CHECKED BY: _____

DRAWN BY: _____

COMPARED BY: _____

SYMBOL	DESCRIPTION	APPROVED	DATE

REVISIONS

NV5

40 MARCUS DRIVE, SUITE 201
MELVILLE, NEW YORK 11747
P: 631.891.3200 WWW.NV5.COM

CARLLS RIVER WATERSHED PROJECT
30% DRAFT PLANS

STRUCTURAL PLAN & TYPICAL SECTION
LOCATION #2 – ELDA LAKE

PROJECT NO.	SCALE	DWG. NO	SHEET NO.
728518-0000340		CP-L02	X OF X

S:\Project\728518-0000340.00-Carlls River Watershed Design Project\Technical\Cadd\Plan Sheets\XX-GP&E Project 2-4.dwg

NORTH

NOTES:

1. SEE PROFILE AND FISH PASSAGE DETAILS FOR INFORMATION NOT SHOWN.
2. STEEL GRATE ON TOP OF FISH PASSAGE NOT SHOWN FOR CLARITY (SEE DETAILS).
3. CONTRACTOR SHALL USE TURBIDITY CURTAIN DURING CONSTRUCTION OF THE FISH PASSAGE.
4. EXISTING TREES AND BRUSH SHALL BE REMOVED FROM THE DAM AS REQUIRED BY THE NYSDEC.
5. ALL PROPOSED CONNECTIONS BETWEEN PRECAST CONCRETE FISH PASSAGE SHALL HAVE WATER TIGHT JOINTS.
6. CLEARING SHALL BE MINIMIZED TO THE GREATEST EXTENT POSSIBLE. ALL CLEARED AND DISTURBED AREAS AS SHOWN ON THE PLAN SHALL BE REPLANTED WITH HYDROSEEDING AND NATIVE, WET TOLERANT, 3 GALLON SHRUBS PLANTED NO LESS DENSE THAN 6 FEET ON CENTER.
7. THE CONTRACTOR SHALL BE AWARE THAT DEWATERING MAY BE NECESSARY DURING THE INSTALLATION OF THE PROPOSED FISH PASSAGE DUE TO THE HIGH GROUNDWATER TABLE. THERE WILL BE NO ADDITIONAL PAY ITEMS FOR DEWATERING. COST TO BE INCLUDED UNDER OTHER ITEMS IN CONTRACT.

GRAPHIC SCALE

10 0 5 10 20 30

(IN FEET)
1 INCH = 10 FT.

CONCEPTUAL PLAN

DATE	BY	DESCRIPTION	APPROV. BY

REVISIONS

TOWN OF BABYLON
SUFFOLK COUNTY, NEW YORK

CARLLS RIVER

ELDA LAKE CONCEPTUAL PLAN

L. K. McLEAN ASSOCIATES, P.C.
CONSULTING ENGINEERS 437 SOUTH COUNTRY RD., BROOKHAVEN, NEW YORK 11719

Designed By: KJM	Scale: AS NOTED	DRAWING	
Drawn By: RTN	Date: JUNE 2018	1 of 4	
Approved By: RAS	File No.: 18052.000		

Jun 26, 2018 - 03:33pm
P:\18052.000 Carlls River\Civil DWG\Contract Drawings\General Plans.dwg

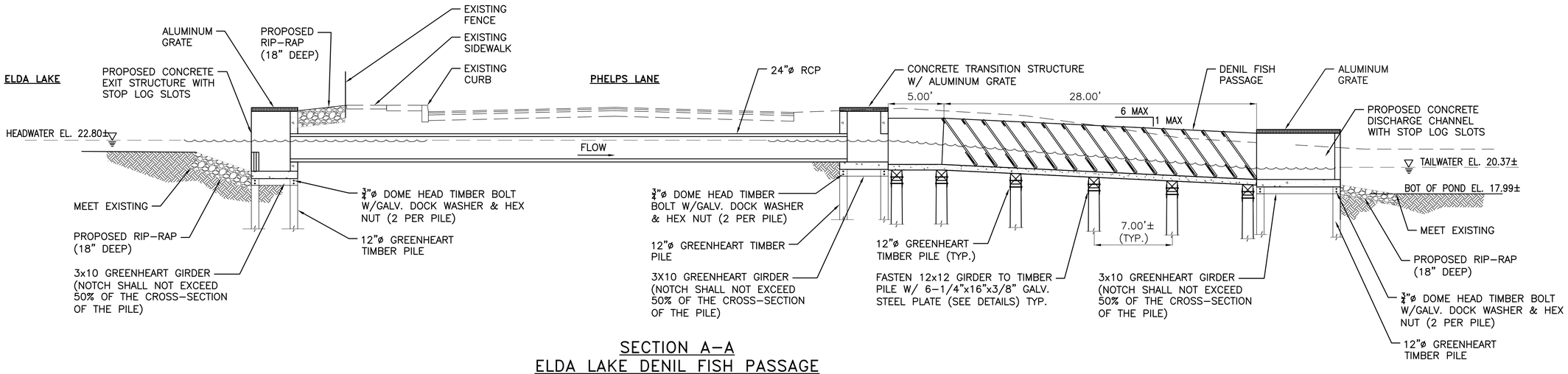

SECTION A–A
ELDA LAKE DENIL FISH PASSAGE
SCALE 1"=5'

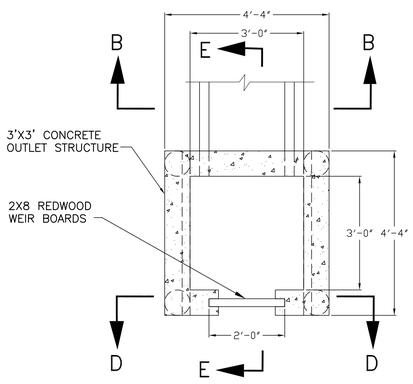

PLAN
3'X3' OUTLET STRUCTURE
N.T.S.

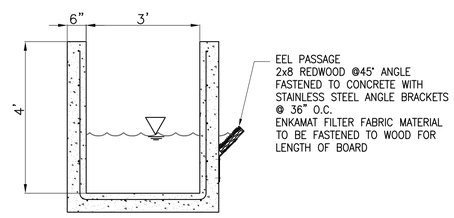

SECTION B–B
DENIL LADDER
NTS

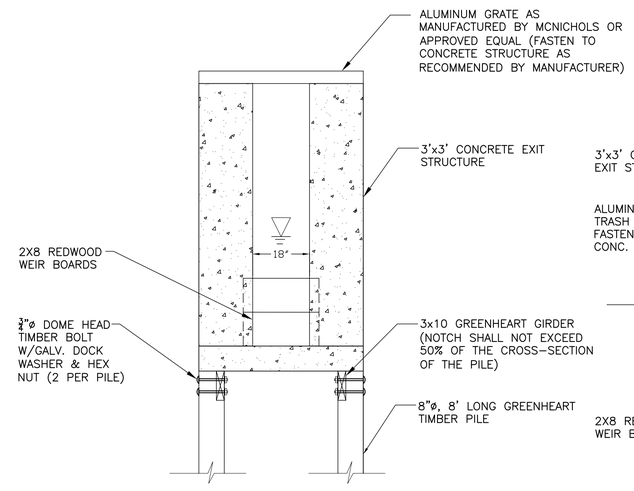

SECTION D–D
N.T.S.

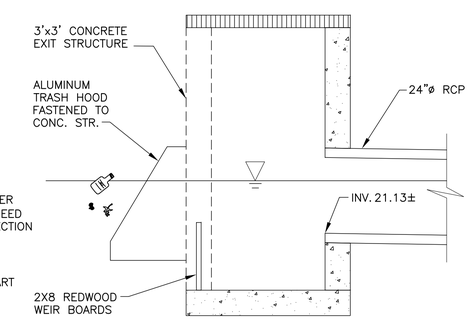

SECTION E–E
N.T.S.

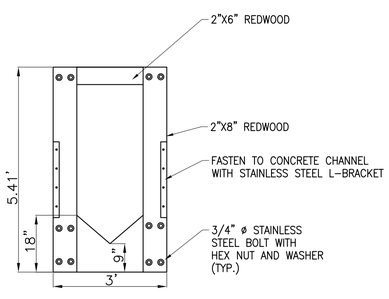

REDWOOD BAFFLE
NTS

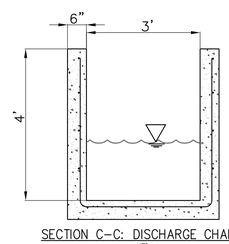

SECTION C–C: DISCHARGE CHANNEL
NTS

DATE	BY	DESCRIPTION	APPROV. BY

REVISIONS

TOWN OF BABYLON
SUFFOLK COUNTY, NEW YORK

CARLLS RIVER

ELDA LAKE
FISH PASSAGE DETAILS

L. K. McLEAN ASSOCIATES, P.C.
CONSULTING ENGINEERS 437 SOUTH COUNTRY RD., BROOKHAVEN, NEW YORK 11719

Designed By: KJM	Scale: AS NOTED	DRAWING	
Drawn By: RTN	Date: JUNE 2018	3 of 4	
Approved By: RAS	File No.: 18052.000		

Jun 26, 2018 – 03:41pm
P:\18052.000 Carlls River\Civil DWG\Contract Drawings\Elda Lake fish passage details.dwg

LOCATION #2 PROFILE

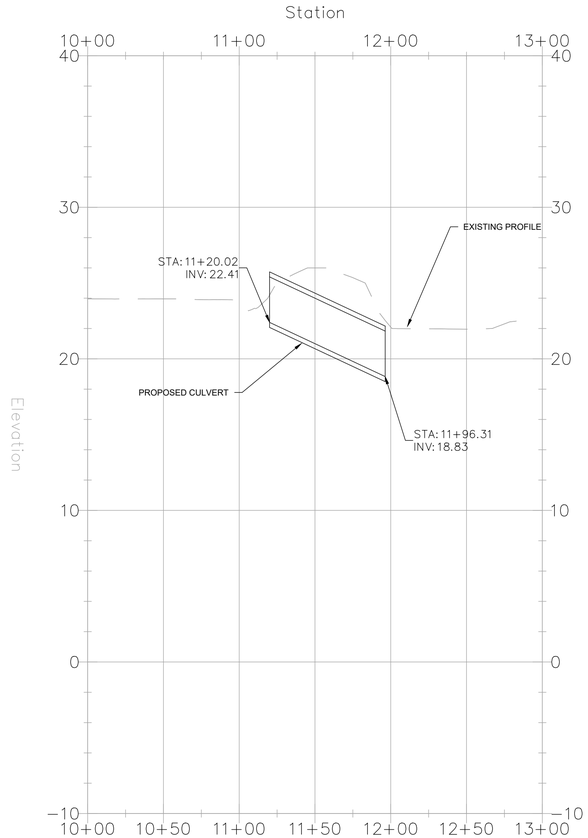

PHELPS LANE PROFILE

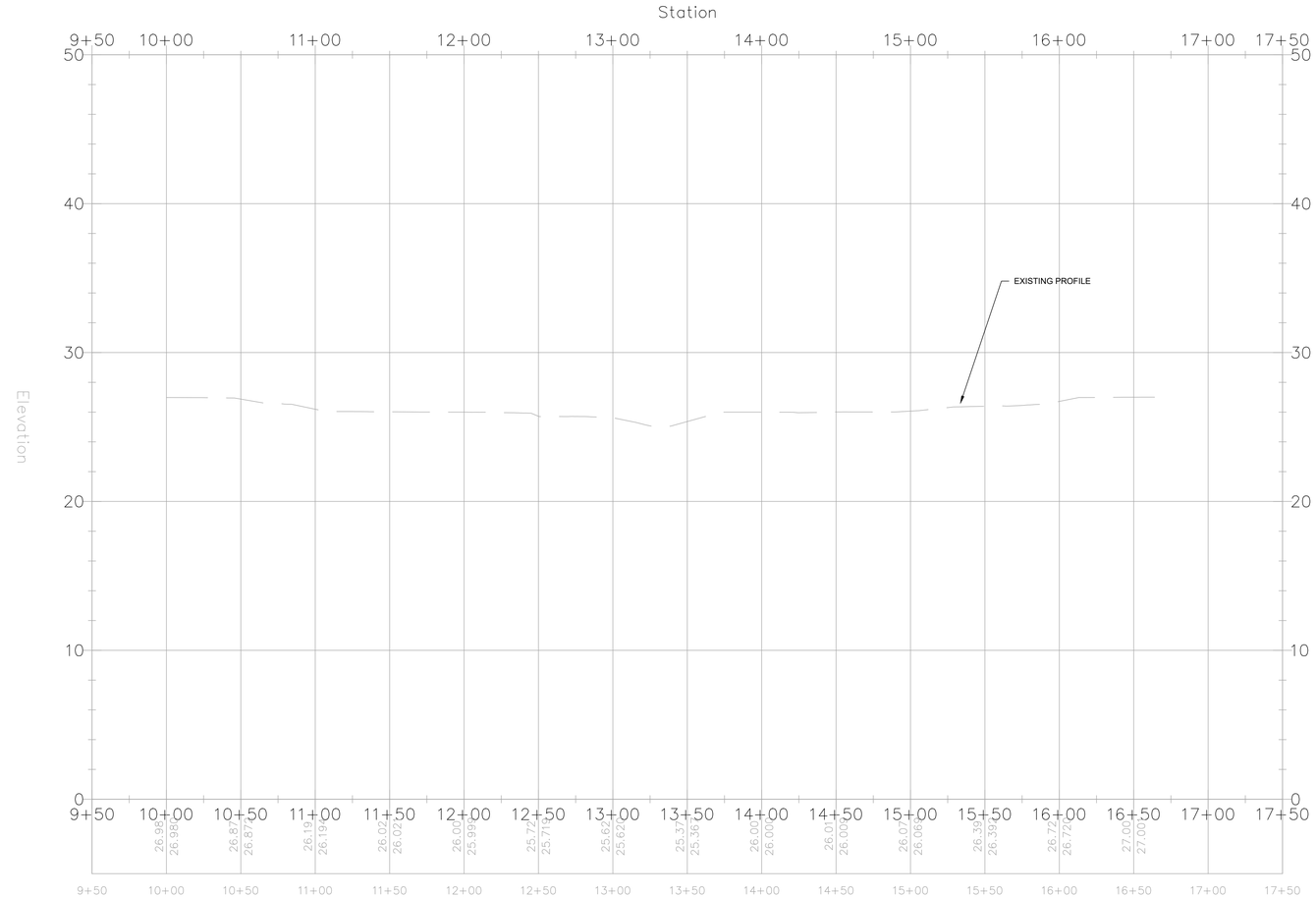

0 50 100
HORIZONTAL SCALE

0 5 10
VERTICAL SCALE

DESIGNED BY: _____

CHECKED BY: _____

DRAWN BY: _____

COMPARED BY: _____

SYMBOL	DESCRIPTION	APPROVED	DATE

REVISIONS

NV5

40 MARCUS DRIVE, SUITE 201
MELVILLE, NEW YORK 11747
P: 631.891.3200 WWW.NV5.COM

CARLLS RIVER WATERSHED PROJECT
30% DRAFT PLANS

PROFILE
LOCATION #2 – ELDA LAKE

PROJECT NO.	SCALE	DWG. NO	SHEET NO.
728518-0000340	–	PR-02	X OF X

S:\Project\728518-0000340.00-Carlls River Watershed Design Project\Technical\Cad\Plan Sheets\06-Profiles.dwg

Land Use
Ecological Services, Inc.

March 15, 2019

NYSDEC, Division of Environmental Permits
SUNY at Stony Brook, 50 Circle Drive
Stony Brook, NY 11790
Attn: Ms. Kim Lamiroult

Re: Town of Babylon- Carlls River Watershed Project
Locust Avenue Culvert Replacement
NYSDEC ID#: 1-4720-02115/00011

Dear Ms. Lamiroult:

Enclosed please find a NYSDEC permit application package for the proposed replacement and up-sizing of an existing 5-ft wide, 3-sided culvert with a 23-ft wide open span with the road bridge supported by concrete sheet piles.

The proposed project will provide hydraulic improvements by increasing stormwater conveyance capacity and reducing potential for flooding. These hydraulic improvements extend upstream to the north of the Park Avenue culvert, as the capacity of the Locust Avenue culvert limits flow through the Park Avenue culvert during high volume events. The proposed open span will improve stream habitat and function (in terms of fish and wildlife passage) by making flow rates within the improved crossing more consistent with upstream and downstream flows, providing natural substrate within the new open span, and minimizing potential culvert impacts to in-stream sediment transport. The proposed construction is located within the Village of Babylon right-of-way for Locust Avenue.

The project is part of a comprehensive watershed management plan for the Carlls River being implemented by the Town of Babylon in conjunction with the Governor's Office of Storm Recovery (GOSR) and the NY Rising Community Reconstruction (NYRCR) Program. Other flood mitigation and stormwater infrastructure improvement projects included in the comprehensive Carlls River Watershed project include the following:

- NYS Route 27 Stormwater Wetland: 1-4720-00556/00010
- Southard's Pond Control Gate and Culverts: 1-4720-00811/02023
- Argyle Lake Outfall Culvert Replacement: NYSDEC ID#: 1-4720-00863/00023
- Elda Lake Control Gate & Culvert/Fish Passage Improvements: No NYSDEC ID

This application package for the Locust Avenue culvert replacement (NYSDEC ID##: 1-4720-02155/00011) includes the following:

570 Expressway Drive South, Suite 2F, Medford, NY 11763
Phone: (631)-727-2400 Fax: (631)-727-2605

- Joint Application Form signed by Town of Babylon and Village of Babylon officials
- Site Plans (4 sets) prepared by NV5 (dated February 2019)
- Project Description
- Short Environmental Assessment Form
- Structural and Archaeological Assessment Form
- NYS Parks, Recreation, and Historic Preservation Office Letter (dated May 29, 2018)
- New York Natural Heritage Program Letter (dated June 24, 2018)
- Site Photographs
- Location Map
- NYSDEC Article 24 Application Fee ($50)

Kindly contact me at (631) 727-2400 or wbowman@landuse.us if you have any questions or require additional information for Department's review of the Town's application for the Locust Avenue culvert replacement project. Thank you.

Very truly yours,

William Bowman, PhD
Senior Scientist

cc. J Figueredo (NV5), via email
R Groh (Town of Babylon), via email

NEW YORK STATE | Department of Environmental Conservation | Office of General Services | Department of State

US Army Corps of Engineers

JOINT APPLICATION FORM

For Permits for activities activities affecting streams, waterways, waterbodies, wetlands, coastal areas, sources of water, and endangered and threatened species.

You must separately apply for and obtain Permits from each involved agency before starting work. Please read all instructions.

1. **Applications To:**

>NYS Department of Environmental Conservation ☑ Check here to confirm you sent this form to NYSDEC.

Check all permits that apply:

- ☑ Stream Disturbance
- ☐ Excavation and Fill in Navigable Waters
- ☐ Docks, Moorings or Platforms
- ☐ Dams and Impoundment Structures
- ☑ 401 Water Quality Certification
- ☑ Freshwater Wetlands
- ☐ Tidal Wetlands
- ☐ Wild, Scenic and Recreational Rivers
- ☐ Coastal Erosion Management
- ☐ Water Withdrawal
- ☐ Long Island Well
- ☐ Incidental Take of Endangered / Threatened Species

>US Army Corps of Engineers ☑ Check here to confirm you sent this form to USACE.

Check all permits that apply: ☑ Section 404 Clean Water Act ☑ Section 10 Rivers and Harbors Act

Is the project Federally funded? ☐ Yes ☑ No

If yes, name of Federal Agency: US Department of Housing and Urban Development -GOSR Project

General Permit Type(s), if known: NWP 3-Maintenance

Preconstruction Notification: ☐ Yes ☑ No

>NYS Office of General Services ☐ Check here to confirm you sent this form to NYSOGS.

Check all permits that apply:

- ☐ State Owned Lands Under Water
- ☐ Utility Easement (pipelines, conduits, cables, etc.)
- ☐ Docks, Moorings or Platforms

>NYS Department of State ☐ Check here to confirm you sent this form to NYSDOS.

Check if this applies: ☐ Coastal Consistency Concurrence

2. **Name of Applicant**

Town of Babylon (attn: Rich Groh)

Taxpayer ID (if applicant is NOT an individual)

Mailing Address: Department of Coastal and Environmental Management, Room 23, 281 Phelps Lane

Post Office / City: North Babylon | State: NY | Zip: 11703

Telephone: (631) 422-7640 Email: rgroh@townofbabylon.com

Applicant Must be (check all that apply): ☑ Owner ☐ Operator ☐ Lessee

3. **Name of Property Owner (if different than Applicant)**

Village of Babylon

Mailing Address: 153 West Main Street

Post Office / City: Babylon | State: NY | Zip: 11702

Telephone: 631-669-1212 Email:

For Agency Use Only	Agency Application Number:

4. **Name of Contact / Agent**

William Bowman/Land Use Ecological Services, Inc.

Mailing Address	Post Office / City	State	Zip
570 Expressway Drive South, Suite 2F	Medford	NY	11763

Telephone 631-727-2400 Email wbowman@landuse.us

5. **Project / Facility Name**

Locust Avenue Culvert Replacement

Property Tax Map Section / Block / Lot Number:

Project Street Address, if applicable	Post Office / City	State	Zip
Locust Avenue	Babylon	NY	11702

Provide directions and distances to roads, intersections, bridges and bodies of water

Project site is located at the intersection of the Carll's River and Locust Avenue. Project is located on Locust Ave, approximately 475' west of N Carll Ave.

☐ Town ☑ Village ☐ City

County	Stream/Waterbody Name
Suffolk	Carll's River

Babylon

Project Location Coordinates: Enter Latitude and Longitude in degrees, minutes, seconds:

Latitude: 40 ° 42 ' 3.7542 " Longitude: -73 ° 19 ' 39.7416 "

6. **Project Description:** Provide the following information about your project. Continue each response and provide any additional information on other pages. **Attach plans on separate pages.**

a. Purpose of the proposed project:

The project proposes the up-sizing of an existing culvert at Locust Avenue by replacement of an existing 15-ft wide, 3-sided culvert (62 ft. in length) with a 23-ft wide open span with the road bridge supported by concrete sheet piles. The proposed project will provide hydraulic improvements by increasing stormwater conveyance capacity and reducing potential for flooding. Please see attached Project Description for additional details.

b. Description of current site conditions:

The site is currently developed with an existing 15-ft wide, 3-sided culvert (62-ft in length) beneath the road surface. The stream channel upstream and downstream of the Locust Ave culvert is wider than the existing culvert. Nearby wetlands associated with the the Carll's River are dominated by invasive Phragmites stands.

c. Proposed site changes:

Project proposes to replace the existing culvert with a new 23-ft wide, 3-sided culvert (62-ft in length). New culvert shall be supported by concrete sheet piles. The 3-sided culvert will allow for substrate within the culvert, providing a more natural habitat for fish and wildlife. Existing gabions downstream of Locust Ave will be removed and replaced to align with the new span opening. Please see attached Project Description for details.

d. Type of structures and fill materials to be installed, and quantity of materials to be used (e.g., square feet of coverage, cubic yards of fill material, structures below ordinary/mean high water, etc.):

Culvert shall be 23 ft wide and 62 ft in length with a concrete abutment of the road bridge. Culvert shall be supported by 12-inch thick prestressed concrete sheet piles driven into the existing grade.

e. Area of excavation or dredging, volume of material to be removed, location of dredged material placement:

No in-stream excavation is proposed. All excavation will occur within the existing limits of the roadway.

f. Is tree cutting or clearing proposed? ☑ Yes If Yes, explain below. ☐ No

Timing of the proposed cutting or clearing (month/year): TBD

Number of trees to be cut: 1 Acreage of trees to be cleared:

g. Work methods and type of equipment to be used:

Excavator, crane for installing cofferdam sheeting, concrete truck, mudsucker pump, and other conventional construction equipment. Any water pumped from construction area via mudsucker shall be discharged into an upland area outside of the stream and wetlands. For additional information, refer to provided Project Description.

h. Describe the planned sequence of activities:

Complete clearing and grubbing within construction limits. Implement road closure, detour, and construct temporary pedestrian crossing. Install erosion, sediment, turbidity control practices. Excavate for culvert construction. Install sheet pile walls around existing culvert via jetting/driving. Remove existing culvert and construct remainder of the new culvert. Complete site restoration including native plantings.

i. Pollution control methods and other actions proposed to mitigate environmental impacts:

None necessary nor proposed.

j. Erosion and silt control methods that will be used to prevent water quality impacts:

Silt fence shall be installed to avoid suspension and transport of sediments from the dewatering area. A turbidity curtain shall also be installed downstream of the bridge and culvert to prevent downstream turbidity plumes.

k. Alternatives considered to avoid regulated areas. If no feasible alternatives exist, explain how the project will minimize impacts:

No feasible alternatives exist to avoid regulated areas, as the project involves replacing an existing culvert that is adjacent to freshwater wetlands. Project will minimize impacts through replanting approximately 500sq. ft. adjacent to the stream bank with native vegetation. Additionally, construction actions that may increase turbidity or to occur within the stream channel is prohibited between October 1 and March 31 to avoid potential impacts to trout spawning.

l. Proposed use: ☐ Private ☑ Public ☐ Commercial

m. Proposed Start Date: Fall 2019 Estimated Completion Date: 3-6 months

n. Has work begun on project? ☐ Yes If Yes, explain below. ☑ No

o. Will project occupy Federal, State, or Municipal Land? ☑ Yes If Yes, explain below. ☐ No

Project site is located within the Village of Babylon right-of-way for Locust Avenue. Lands upstream and downstream of the roadway are controlled by New York State.

p. List any previous DEC, USACE, OGS or DOS Permit / Application numbers for activities at this location:

Please see attached Previous Permits supplemental document.

q. Will this project require additional Federal, State, or Local authorizations, including zoning changes?

☑ Yes If Yes, list below. ☐ No

US Army Corps of Engineers approval is required.

7. **Signatures.**
Applicant and Owner (If different) must sign the application.
Append additional pages of this Signature section if there are multiple Applicants, Owners or Contact/Agents.

I hereby affirm that information provided on this form and all attachments submitted herewith is true to the best of my knowledge and belief.

Permission to Inspect - I hereby consent to Agency inspection of the project site and adjacent property areas. Agency staff may enter the property without notice between 7:00 am and 7:00 pm, Monday - Friday. Inspection may occur without the owner, applicant or agent present. If the property is posted with "keep out" signs or fenced with an unlocked gate, Agency staff may still enter the property. Agency staff may take measurements, analyze site physical characteristics, take soil and vegetation samples, sketch and photograph the site. I understand that failure to give this consent may result in denial of the permit(s) sought by this application.

False statements made herein are punishable as a Class A misdemeanor pursuant to Section 210.45 of the NYS Penal Law. Further, the applicant accepts full responsibility for all damage, direct or indirect, of whatever nature, and by whomever suffered, arising out of the project described herein and agrees to indemnify and save harmless the State from suits, actions, damages and costs of every name and description resulting from said project. In addition, Federal Law, 18 U.S.C., Section 1001 provides for a fine of not more than $10,000 or imprisonment for not more than 5 years, or both where an applicant knowingly and willingly falsifies, conceals, or covers up a material fact; or knowingly makes or uses a false, fictitious or fraudulent statement.

Signature of Applicant | Date: 2/20/19

Applicant Must be (check all that apply): ☐ Owner ☑ Operator ☐ Lessee

Printed Name: Antonio A. Martinez | Title: Deputy Supervisor

Signature of Owner (if different than Applicant) | Date: 02/22/19

Printed Name: RALPH A. SCORDINO
Ralph A. Scordino | Title: Mayor

Signature of Contact / Agent | Date: 3/15/19

Printed Name: William Bowman/Land Use Ecological Services, Inc. | Title: Senior Scientist

For Agency Use Only — **DETERMINATION OF NO PERMIT REQUIRED**

Agency Application Number _____

_____ (Agency Name) has determined that No Permit is required from this Agency for the project described in this application.

Agency Representative:
Printed Name _____ Title _____
Signature _____ Date _____

Land Use
Ecological Services, Inc.

March 15, 2019

NYSDEC, Division of Environmental Permits
SUNY at Stony Brook, 50 Circle Drive
Stony Brook, NY 11790
Attn: Ms. Kim Lamiroult

Re: Town of Babylon- Carlls River Watershed Project
NYS Route 27 Stormwater Wetland
NYSDEC ID# 1-4720-00556/00010

Dear Ms. Lamiroult:

Enclosed please find a NYSDEC permit application package for the proposed construction of a 1.5 acre stormwater management facility, including 10,600 SF of proposed stormwater wetlands, directly north of Sunrise Highway in uplands located on a 2.29-acre Town of Babylon-owned tax parcel (SCTM#: 100-16-1-49). The stormwater wetland is designed to treat stormwater runoff from 19.6 acres of impervious surfaces associated with Sunrise Highway prior to discharging in to the wester spur of Carlls River. Currently, this runoff discharges directly to surface waters. Environmental benefits expected to result from the proposed project include improvements to water quality by reducing discharge of sediments, road salt, and pollutants to the western spur of Carlls River, increasing habitat quality, and increasing habitat availability for wildlife.

The project is part of a comprehensive watershed management plan for the Carlls River being implemented by the Town of Babylon in conjunction with the Governor's Office of Storm Recovery (GOSR) and the NY Rising Community Reconstruction (NYRCR) Program. Other flood mitigation and stormwater infrastructure improvement projects included in the comprehensive Carlls River Watershed project include the following:

- Southard's Pond Control Gate and Culverts: 1-4720-00811/02023
- Locust Avenue Culvert Replacement: 1-4720-02115/00011
- Argyle Lake Outfall Culvert Replacement: NYSDEC ID#: 1-4720-00863/00023
- Elda Lake Control Gate & Culvert/Fish Passage Improvements: No NYSDEC ID

This application package for the NYS Route 27 Stormwater Wetland (NYSDEC ID# 1-4720-00556/00010) includes the following:

- Joint Application Form
- Site Plans (4 sets) prepared by NV5 (dated February 2019)

570 Expressway Drive South, Suite 2F • Medford, New York • 11763
631-727-2400 • Fax 631-727-2605

- Project Description
- Short Environmental Assessment Form
- Structural and Archaeological Assessment Form
- NYS Parks, Recreation, and Historic Preservation Office Letter (dated May 29, 2018)
- New York Natural Heritage Program Letter (dated June 24, 2018)
- Site Photographs
- Location Map
- NYSDEC Article 24 Application Fee ($200)

Kindly contact me at (631) 727-2400 or wbowman@landuse.us if you have any questions or require additional information for Department's review of the Town's application for the NYS Route 27 stormwater wetland project. Thank you.

Very truly yours,

William Bowman, PhD
Senior Scientist

cc. J Figueredo (NV5), via email
R Groh (Town of Babylon), via email

NEW YORK STATE | Department of Environmental Conservation | Office of General Services | Department of State

US Army Corps of Engineers

JOINT APPLICATION FORM

For Permits for activities activities affecting streams, waterways, waterbodies, wetlands, coastal areas, sources of water, and endangered and threatened species.

You must separately apply for and obtain Permits from each involved agency before starting work. Please read all instructions.

1. **Applications To:**

>NYS Department of Environmental Conservation ☑ Check here to confirm you sent this form to NYSDEC.

Check all permits that apply:

- ☑ Stream Disturbance
- ☐ Excavation and Fill in Navigable Waters
- ☐ Docks, Moorings or Platforms
- ☐ Dams and Impoundment Structures
- ☑ 401 Water Quality Certification
- ☑ Freshwater Wetlands
- ☐ Tidal Wetlands
- ☐ Wild, Scenic and Recreational Rivers
- ☐ Coastal Erosion Management
- ☐ Water Withdrawal
- ☐ Long Island Well
- ☐ Incidental Take of Endangered / Threatened Species

>US Army Corps of Engineers ☑ Check here to confirm you sent this form to USACE.

Check all permits that apply: ☑ Section 404 Clean Water Act ☑ Section 10 Rivers and Harbors Act

Is the project Federally funded? ☑ Yes ☐ No

If yes, name of Federal Agency: US Department of Housing and Urban Development -GOSR Project

General Permit Type(s), if known: NWP 43- Stormwater Management

Preconstruction Notification: ☑ Yes ☐ No

>NYS Office of General Services ☐ Check here to confirm you sent this form to NYSOGS.

Check all permits that apply:

- ☐ State Owned Lands Under Water
- ☐ Utility Easement (pipelines, conduits, cables, etc.)
- ☐ Docks, Moorings or Platforms

>NYS Department of State ☐ Check here to confirm you sent this form to NYSDOS.

Check if this applies: ☐ Coastal Consistency Concurrence

2. **Name of Applicant**: Town of Babylon (attn: Rich Groh)

Taxpayer ID (if applicant is NOT an individual):

Mailing Address: Department of Coastal and Environmental Management, Room 23, 281 Phelps Lane

Post Office / City: North Babylon

State: NY

Zip: 11703

Telephone: (631) 422-7640

Email: rgroh@townofbabylon.com

Applicant Must be (check all that apply): ☑ Owner ☐ Operator ☐ Lessee

3. **Name of Property Owner (if different than Applicant)**

Mailing Address

Post Office / City

State

Zip

Telephone

Email

For Agency Use Only	Agency Application Number:

4. **Name of Contact / Agent**

William Bowman/Land Use Ecological Services, Inc.

Mailing Address	Post Office / City	State	Zip
570 Expressway Drive South, Suite 2F	Medford	NY	11763

Telephone 631-727-2400 Email wbowman@landuse.us

5. **Project / Facility Name** NYS Route 27 Stormwater Wetland

Property Tax Map Section / Block / Lot Number: 100-16-1-49

Project Street Address, if applicable	Post Office / City	State	Zip
Sunrise Highway (NYS RTE 27)	Babylon	NY	11702

Provide directions and distances to roads, intersections, bridges and bodies of water

Project site is located at the western intersection of the western spur of the Carlls River and Sunrise Highway. Project site is located approximately 615' east of Harvard Road, and 1,185' west of Stream Street.

☑ Town ☐ Village ☐ City

County	Stream/Waterbody Name
Suffolk	Carlls River

Project Location Coordinates: Enter Latitude and Longitude in degrees, minutes, seconds:

Latitude: 40 ° 42 ' 52.29 " Longitude: -73 ° 19 ' 52.557 "

6. **Project Description:** Provide the following information about your project. Continue each response and provide any additional information on other pages. **Attach plans on separate pages.**

a. Purpose of the proposed project:

The proposed 1.5 acre stormwater wetland is designed to treat runoff from 19.62 acres of impervious surfaces of Sunrise Hwy prior to discharging in to the wester spur of Carlls River. Currently, this runoff discharges directly to surface waters. The project will result in improvements to water quality by reducing discharge of sediments, road salt, and pollutants to the western spur of the Carlls River and will improve fish and wildlife habitat.

b. Description of current site conditions:

The property is comprised of upland early successional forests and fields dominated by native and invasive vegetation. The site consists of historical fill and was largely cleared until at least 1984 (based on review of historical aerial imagery from the Suffolk County GIS-Viewer).

c. Proposed site changes:

The proposed 1.5 acre stormwater basin is located entirely within the upland areas on the site. The stormwater basin shall create a 10,600 SF of native emergent and submergent herbaceous wetland plantings area (El. 9 to 15) and native upland tree and shrubs plantings above El. 15. The permanent pool shall maintain a water depth of 4 feet. Excavation of 11,300 cubic yards of material is required (maximum cut depth of ~12 feet).

d. Type of structures and fill materials to be installed, and quantity of materials to be used (e.g., square feet of coverage, cubic yards of fill material, structures below ordinary/mean high water, etc.):

Component structures of stormwater wetland include asphalt maintenance driveway (120' from wetlands), 350 SF stormwater pre-treatment device (93' from wetlands), concrete/paver maintenance driveway (60' from wetlands), 4-ft earthen berm adjacent to wetlands, concrete riser structure and 30-inch concrete pipe (29' from wetlands), 550 SF rip-rap scour apron (5' from wetlands), and 1,500 SF rip-rap lined emergency spillway adjacent to wetlands.

e. Area of excavation or dredging, volume of material to be removed, location of dredged material placement:

Net cut/removal of upland fill is approximately 11,300 CY. Material shall be removed from site and disposed at an authorized location. Re-grading within 1,100 SF of existing wetlands is required to establish vegetated drainage swale; however, this grading will require no net cut/fill.

f. Is tree cutting or clearing proposed? ☑ Yes If Yes, explain below. ☐ No

Timing of the proposed cutting or clearing (month/year): TBD. Targeted Fall/Winter 2019

Number of trees to be cut: Acreage of trees to be cleared: 1.3

g. Work methods and type of equipment to be used:

Excavator, crane and/or concrete truck for installing/constructing riser and/or pre-treatment structure, payloader, bulldozer, and other conventional construction equipment. De-watering methods to be determined by contractor, but is anticipated to include mudsucker pump. If the contractor instead uses well points for dewatering, they will be obtain all necessary permits. For additional information, refer to provided Project Description.

h. Describe the planned sequence of activities:

Refer to Project Description. Install erosion and sediment practices and tree protection practices. Necessary lane closure shall be implemented and temporary asphalt constructed. Clearing and grubbing of the basin site shall be completed. Drainage basin and associated structures shall be constructed. Plantings and re-vegetation shall be completed at appropriate time of year. Restore roadway and pedestrian sidewalk. Removal of erosion controls.

i. Pollution control methods and other actions proposed to mitigate environmental impacts:

The aim of the proposed stormwater management basin is to reduce stormwater pollution through reducing discharge of sediments, road salt, and pollutants to the western spur of Carlls River. In addition, a stormwater pre-treatment device shall be installed upstream of the proposed stormwater wetland.

j. Erosion and silt control methods that will be used to prevent water quality impacts:

The project will require the preparation of a Stormwater Pollution Prevention Plan and include erosion and sediment control measures including tree protection, silt fence, temporary seeding, construction entrance, and turbidity curtain. Also, the impacts of silt and turbidity to trout spawning will be minimized by limiting in-stream or adjacent construction to between April 1 and Sept 30 of any calendar year.

k. Alternatives considered to avoid regulated areas. If no feasible alternatives exist, explain how the project will minimize impacts:

Stormwater management facilities do not necessarily need to be located in regulated areas. However, this facility must be located in close proximity to Carlls River in order to receive stormwater that is now discharged directly to the stream. The project minimizes impacts by locating the stormwater wetland in a previously cleared upland area. Only minor encroachment into the wetlands is proposed to establish connection from basin to stream.

l. Proposed use: ☐ Private ☑ Public ☐ Commercial

m. Proposed Start Date: Fall 2019 Estimated Completion Date: 6-9 months

n. Has work begun on project? ☐ Yes If Yes, explain below. ☑ No

o. Will project occupy Federal, State, or Municipal Land? ☑ Yes If Yes, explain below. ☐ No

Project site is owner by the Town of Bablyon and adjacent to New York State Parklands (Belmont Lake State Park)

p. List any previous DEC, USACE, OGS or DOS Permit / Application numbers for activities at this location:

Please see attached Previous Permits document.

q. Will this project require additional Federal, State, or Local authorizations, including zoning changes?

☑ Yes If Yes, list below. ☐ No

USACOE approval is required.

7. **Signatures.**
Applicant and Owner (If different) must sign the application.
Append additional pages of this Signature section if there are multiple Applicants, Owners or Contact/Agents.

I hereby affirm that information provided on this form and all attachments submitted herewith is true to the best of my knowledge and belief.

Permission to Inspect - I hereby consent to Agency inspection of the project site and adjacent property areas. Agency staff may enter the property without notice between 7:00 am and 7:00 pm, Monday - Friday. Inspection may occur without the owner, applicant or agent present. If the property is posted with "keep out" signs or fenced with an unlocked gate, Agency staff may still enter the property. Agency staff may take measurements, analyze site physical characteristics, take soil and vegetation samples, sketch and photograph the site. I understand that failure to give this consent may result in denial of the permit(s) sought by this application.

False statements made herein are punishable as a Class A misdemeanor pursuant to Section 210.45 of the NYS Penal Law. Further, the applicant accepts full responsibility for all damage, direct or indirect, of whatever nature, and by whomever suffered, arising out of the project described herein and agrees to indemnify and save harmless the State from suits, actions, damages and costs of every name and description resulting from said project. In addition, Federal Law, 18 U.S.C., Section 1001 provides for a fine of not more than $10,000 or imprisonment for not more than 5 years, or both where an applicant knowingly and willingly falsifies, conceals, or covers up a material fact; or knowingly makes or uses a false, fictitious or fraudulent statement.

Signature of Applicant: Antonio Martinez

Date: 2/15/19

Applicant Must be (check all that apply): ☑ Owner ☐ Operator ☐ Lessee

Printed Name: Antonio A. Martinez

Title: Deputy Supervisor

Signature of Owner (if different than Applicant):

Date:

Printed Name:

Title:

Signature of Contact / Agent:

Date: 3/15/19

Printed Name: William Bowman/Land Use Ecological Services, Inc.

Title: Senior Scientist

For Agency Use Only **DETERMINATION OF NO PERMIT REQUIRED**

Agency Application Number

(Agency Name) has determined that No Permit is required from this Agency for the project described in this application.

Agency Representative:

Printed Name: Title:

Signature: Date:

Land Use
Ecological Services, Inc.

March 18, 2019

NY District U.S. Army Corps of Engineers
Eastern Permits Section, Regulatory Branch
26 Federal Plaza, Room 1937
New York, NY 10278

RE: Application for Section 404 Authorization
Town of Babylon- Carlls River Watershed Project
Locust Avenue Culvert Replacement

Dear Sir or Madam:

Enclosed please find a USACE permit application package for the proposed replacement and up-sizing of an existing 5-ft wide, 3-sided culvert with a 23-ft wide open span with the road bridge supported by concrete sheet piles. This reach of the Carlls River is located on New York State Parks lands upstream and downstream of the Locust Avenue culvert.

The proposed project will provide hydraulic improvements by increasing stormwater conveyance capacity and reducing potential for flooding. These hydraulic improvements extend upstream to the north of the Park Avenue culvert, as the capacity of the Locust Avenue culvert limits flow through the Park Avenue culvert during high volume events. The proposed open span will improve stream habitat and function (in terms of fish and wildlife passage) by making flow rates within the improved crossing more consistent with upstream and downstream flows, providing natural substrate within the new open span, and minimizing potential culvert impacts to in-stream sediment transport. The project is part of a comprehensive watershed management plan for the Carlls River being implemented by the Town of Babylon in conjunction with the Governor's Office of Storm Recovery (GOSR) and the NY Rising Community Reconstruction (NYRCR) Program. Other flood mitigation and stormwater infrastructure improvement projects included in the comprehensive Carlls River Watershed project include the following:

- NYS Route 27 Stormwater Wetland
- Southard's Pond Control Gate and Culverts
- Argyle Lake Outfall Culvert Replacement
- Elda Lake Control Gate & Culvert/Fish Passage Improvements

This application package for the Locust Avenue culvert replacement project includes the following:

- Environmental Questionnaire
- Joint Application for Permit

570 Expressway Drive South, Suite 2F, Medford, NY 11763
Phone: (631)-727-2400 Fax: (631)-727-2605

- Project Description
- Site Plan prepared by NV5, last revised February 2019
- Copy of the NYSDEC application package
- Site Photographs
- Location Map

Kindly contact me at (631) 727-2400 or wbowman@landuse.us if you have any questions or require additional information for review of the Town's application for the Locust Avenue culvert replacement project. Thank you.

Very truly yours,

William Bowman, PhD
Senior Scientist

cc. J Figueredo (NV5), via email
R Groh (Town of Babylon), via email

Land Use
Ecological Services, Inc.

March 18, 2019

NY District U.S. Army Corps of Engineers
Eastern Permits Section, Regulatory Branch
26 Federal Plaza, Room 1937
New York, NY 10278

RE: Application for Section 404 Authorization
Town of Babylon- Carlls River Watershed Project
NYS Route 27 Stormwater Wetland

Dear Sir or Madam:

Enclosed please find a USACE permit application package for the proposed construction of a 2.25 acre stormwater management facility including 10,860 SF of wetlands directly north of Sunrise Highway in uplands located on a 2.29-acre Town of Babylon-owned tax parcel (SCTM#: 100-16-1-49). The stormwater wetland is designed to treat 19.62 acres of impervious runoff from Sunrise Highway prior to discharging in to the western spur of Carlls River. Currently, this runoff discharges directly to surface waters. Environmental benefits expected to result from the proposed project include improvements to water quality by reducing discharge of sediments, road salt, and pollutants to the western spur of Carlls River and increasing habitat availability for wildlife and fish.

The project is part of a comprehensive watershed management plan for the Carlls River being implemented by the Town of Babylon in conjunction with the Governor's Office of Storm Recovery (GOSR) and the NY Rising Community Reconstruction (NYRCR) Program. Other flood mitigation and stormwater infrastructure improvement projects included in the comprehensive Carlls River Watershed project include the following:

- Southard's Pond Control Gate and Culverts
- Locust Avenue Culvert Replacement
- Argyle Lake Outfall Culvert Replacement
- Elda Lake Control Gate & Culvert/Fish Passage Improvements

This application package for the NYS Route 27 Stormwater Wetland project includes the following:

- Environmental Questionnaire
- Joint Application for Permit
- Project Description
- Site Plan prepared by NV5, last revised February 2019

570 Expressway Drive South, Suite 2F, Medford, NY 11763
Phone: (631)-727-2400 Fax: (631)-727-2605

- Copy of the NYSDEC application package
- Site Photographs
- Location Map

Kindly contact me at (631) 727-2400 or wbowman@landuse.us if you have any questions or require additional information for review of the Town's application for the NYS Route 27 Stormwater Wetland project. Thank you.

Very truly yours,

William Bowman, PhD
Senior Scientist

cc. J Figueredo (NV5), via email
R Groh (Town of Babylon), via email

DRAFT

Operation and Maintenance Plan (O & M Plan): Argyle Lake Sluice Gate and Culvert at Argyle Park Village of Babylon, NY Carll's River Tributary/Watershed Project

Prepared by Richard Groh

Chief Environmental Analyst

And Emily Sweet

Environmental GIS Analyst

Town of Babylon

Department of Coastal and Environmental Management

Room 406

281 Phelps Lane

North Babylon, NY 11703-4045

Phone (631) 422-7640

Fax (631) 422-7686

October 15, 2019

This plan is for the proposed operation, monitoring and maintenance of the new sluice gate and culvert proposed at Argyle Lake at Argyle Park, Village of Babylon, NY. This would augment the existing control gate and culvert that is part of the dam that impounds the portion of Carll's River that creates Argyle Lake. The purpose of the plan is to describe the operational management of the infrastructure. The following is the operation program that would be administered by the Village of Babylon.

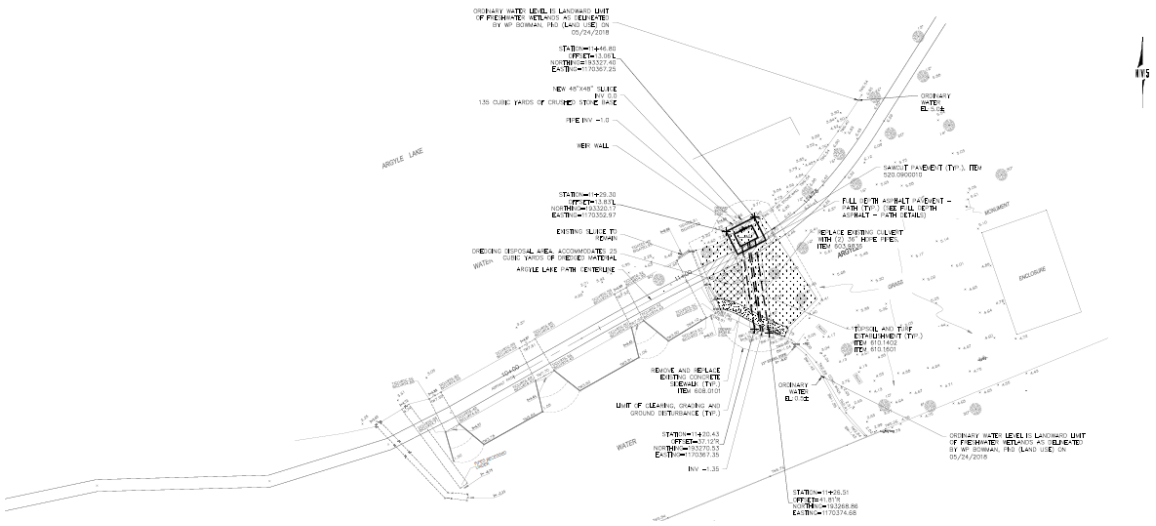

Proposed new infrastructure

Department in Charge of Infrastructure:

Department in Control: Village of Babylon Highway Department (VOB HD)

General Maintenance

1. Visual Inspections of the weir, sluice gate and culvert for debris accumulation and blockages and water level on a weekly basis. In the event any debris is found, a crew will be dispatched to remove the material and properly dispose off site.
2. Preemptive Water Level Control In anticipation of significant precipitation or spring thawing events, VOB HW monitors weather reports and will drop water levels ahead of the storm or significant thaw event using the sluice gate to appropriate levels based on the magnitude of the event.

3. Check for any damage of infrastructure following significant storm events and freezing conditions.

Long Term Maintenance

The infrastructure will be inspected annually for any signs of structural changes, erosion or any sign of defect in construction. The Village Highway Department is led by Skip Gardner, Highway Superintendent, who has over 51 years' experience in all facets of infrastructure, maintenance, and repair. The Village Highway Superintendent would be responsible to insure that any maintenance and repairs are completed as necessary.

DRAFT

Operation and Maintenance Plan (O & M Plan): Elda Lake Dam and Culverts at Elda Lake Phelp's Lane North Babylon, NY Carll's River Tributary/Watershed Project

Prepared by Richard Groh

Chief Environmental Analyst

And Emily Sweet

Environmental GIS Analyst

Town of Babylon

Department of Coastal and Environmental Management

Room 406

281 Phelps Lane

North Babylon, NY 11703-4045

Phone (631) 422-7640

Fax (631) 422-7686

October 15, 2019

This plan is for the proposed operation, monitoring and maintenance of the proposed new dam structure, control valve, culverts and fish ladder at Phelps Lane, North Babylon, NY. This dam impounds a tributary of Carll's River and currently has a dam with control gate. The purpose of the plan is to describe the operational management of the infrastructure. The following is the operation program that would be administered by the Town of Babylon.

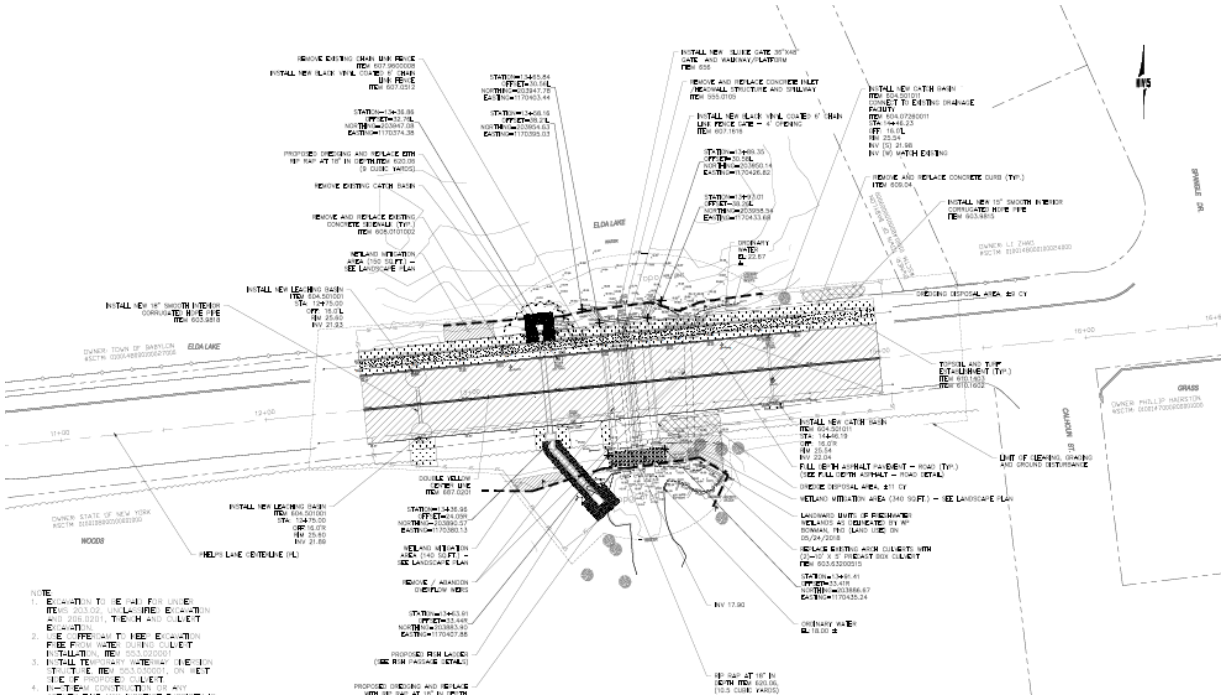

Proposed new infrastructure

Department in Charge of Infrastructure:

Department in Control Town of Babylon Department of Public Works (TOB DPW)

General Maintenance

1. Visual Inspections of dam structure, headwall, culverts (3) and fish ladder for debris accumulation and blockages and water level on a weekly basis. In the event any debris is found a crew will be dispatched to remove the material and properly dispose off site.
2. Preemptive Water Level Control in anticipation of significant precipitation or spring thawing events, TOB DPW monitors weather reports and will drop water levels ahead of the storm using the control gate at the appropriate level based on the magnitude of the event.
3. Check for any damage of infrastructure following significant storm events and freezing conditions.
4. Check the condition of the fence and any signs of attempted access or tampering with lock.

Long Term Maintenance

The infrastructure will be inspected annually for any signs of structural changes, erosion or any sign of defect in construction. The following is the maintenance responsibilities: Tom Stay, Commissioner of Public Works, is a long time public works commissioner with over 12 years' experience with the Town of Babylon. As commissioner, he has the responsibility of maintaining and repairing a significant amount of infrastructure throughout the Town. This includes town buildings, parks, roads, bridges, and drainage infrastructure. Mr. Stay is ultimately responsible for all of this infrastructure. Vincent Piccoli, Deputy Commissioner of Public Works, has over 25 years' experience in building and construction. Mr. Piccoli will be responsible for maintaining water levels and insuring that basic maintenance, such as debris and floatables removal, is conducted by the DPW personnel. The DPW Highway Department Engineering Division is also responsible for maintaining this proposed infrastructure. This would be part of the overall road infrastructure since the culverts are located under Phelps Lane, a Town road.

DRAFT

Operation and Maintenance Plan (O & M Plan): Southard's Pond Culverts, Sluice Gate and Fish Passage at Belmont Lake State Park North Babylon, NY Carll's River Tributary/Watershed Project

Prepared by Richard Groh

Chief Environmental Analyst

And Emily Sweet Environmental GIS Analyst

Town of Babylon

Department of Coastal and Environmental Management

Room 406

281 Phelps Lane

North Babylon, NY 11703-4045

Phone (631) 422-7640

Fax (631) 422-7686

October 15, 2019

This plan is for the proposed operation, monitoring and maintenance of the new culverts, sluice gate and fish ladder at the dam at Southard's Pond, Belmont Lake State Park, North Babylon, NY. This dam impounds a tributary of Carll's River and has existing culverts. The purpose of the plan is to describe the operational management of the infrastructure. The following is the operation program that would be administered by the Village of Babylon.

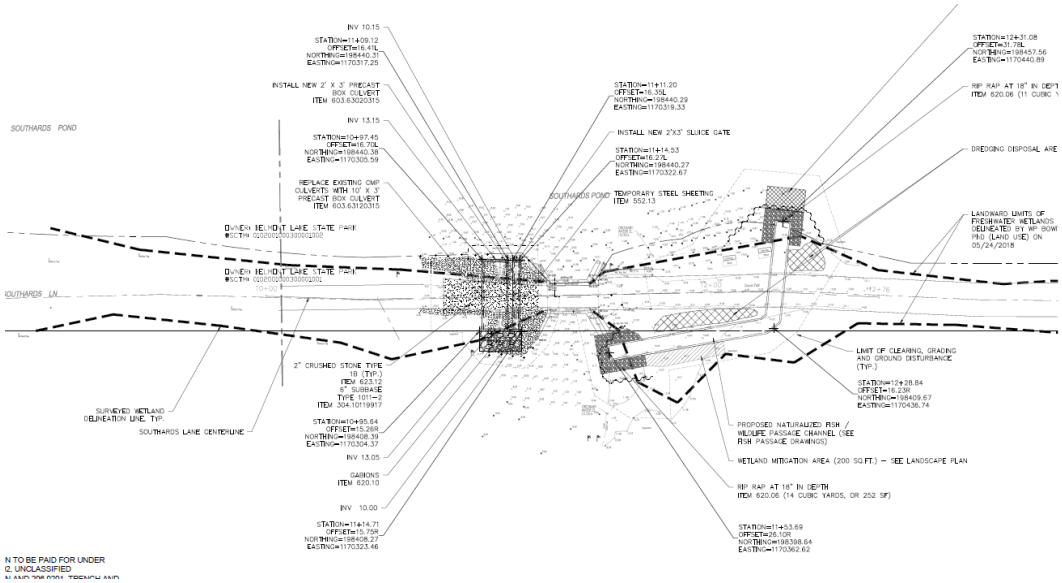

Proposed new infrastructure

Department in Charge of Infrastructure:
*Department in Control Village of Babylon Highway Department (VOB HW)

General Maintenance

1. Visual Inspections of culvert/box structures and fish ladder for debris accumulation and blockages and water level on a weekly basis. In the event any debris is found a crew will be dispatched to remove the material and properly dispose.
2. Preemptive Water Level Control In anticipation of significant precipitation or spring thawing events, VOB HD monitors weather reports and will drop water levels ahead of the storm using the control gate based on the magnitude of the event.
3. Check for any damage of infrastructure following significant storm events and freezing conditions.

Long Term Maintenance

The infrastructure will be inspected annually for any signs of structural changes, erosion or any sign of defect in construction. The Village Highway Department is led by Skip Gardner, Highway Superintendent, who has over 51 years' experience in all facets of infrastructure, maintance, and repair. The Village Highway superintendent would be responsible to insure that any maintenance and repairs are completed as necessary.

*New York State Parks is the owner of the land at the site of this infrastructure. Agreement between the Village of Babylon and NYS Parks is attached as Appendix I to this manual.

THIS INDENTURE, made the 2nd day of March, 1971, between the LONG ISLAND STATE PARK COMMISSION, by and for the People of the State of New York, with offices at Belmont Lake State Park, Babylon, County of Suffolk, State of New York, party of the first part, and the INCORPORATED VILLAGE OF BABYLON, a municipal corporation of the State of New York, having its place of business at 153 West Main Street, Babylon, County of Suffolk, State of New York, party of the second part.

WHEREAS, the party of the first part is charged by law with the supervision and control of all State Parks and Parkways in the Counties of Nassau and Suffolk, including Belmont Lake State Park, Town of Babylon, County of Suffolk, and

WHEREAS, the party of the second part desires to obtain from the party of the first part, a permanent easement to use for park and recreational purposes certain parcels of land within Belmont Lake State Park, south of Sunrise Highway and hereinafter more particularly described, and

WHEREAS, the party of the first part is willing to grant to the party of the second part the desired easement under appropriate conditions and safeguards provided the party of the second part shall develop, maintain, use, and operate said area in a manner at all times acceptable to the party of the first part.

NOW, THIS INDENTURE WITNESSETH that the party of the first part pursuant to authority provided under Section 780 of the Conservation Law, and subject to conditions hereinafter set forth, does hereby grant and convey to the party of the second part a permanent easement to develop, maintain, use, and operate for park and recreational purposes, certain parcels of land within Belmont Lake State Park described as follows:

All that certain lot, piece, or parcel of land, situate, lying and being in the Town of Babylon, County of Suffolk, State of

New York, shown on map entitled "Map No. 4R-2285L showing lands in Belmont Lake State Park to be licensed to the Village of Babylon for Park and Recreation Purposes" dated October 9, 1970, prepared by George H. Walbridge Co., Land Surveyors and Land Planners, Babylon and East Hampton, L.I., New York, for and on file with the Long Island State Park Commission, Belmont Lake State Park, Babylon, New York, which map is attached hereto and made a part hereof, and

All those certain lots, pieces, or parcels of land, situate, lying and being in the Incorporated Village of Babylon, Town of Babylon, County of Suffolk, State of New York, shown as Parcels Nos. 6,7,8,9,10,11,12,13,15,16,17A,17B,18,19,20,21,22,23,23A,24,26,27,28, 29,30,31,32,33,34,35,36,37,38,39,40,41,42,43,44,45,46,47,48,49,50, 51 and 1315 on map entitled "Map of Property Located in the Village of Babylon, Suffolk County, New York to be acquired by the Village of Babylon for Park and Parkway Purposes" surveyed January 1931, amended April 15, 1931, by George H. Walbridge Co., Civil Engineer and Surveyors, Babylon, L.I., New York, on file with the Long Island State Park Commission, Belmont Lake State Park, Babylon, New York, which map is attached hereto and made a part hereof, and

All that certain lot, piece or parcel of land, situate, lying and being in the Incorporated Village of Babylon, Town of Babylon, County of Suffolk, State of New York, being a portion of Lot No. 5 as shown on "Map of Surdi Park situate in the Village of Babylon" dated August 1, 1950 and being further shown on Map No. 15R-1923, dated October 11, 1951, prepared by and on file with the Long Island State Park Commission, Belmont Lake State Park, Babylon, New York, which latter map is attached hereto and made a part hereof.

IT IS EXPRESSLY UNDERSTOOD AND AGREED that this permanent easement is for park and recreational purposes and is to be confined to the lines of the above-described parcels of land and is granted

subject to compliance by the party of the second part with the following provisions:

1. All plans for the construction, installation and/or modification of any and all facilities and improvements in or on said easement area shall be submitted to the party of the first part for approval and/or comment prior to the construction, installation and/or modification of such facilities and improvements.

2. The party of the second part shall at all times supervise, police, operate and maintain the premises herein described and any facilities that may be placed thereon so as to insure the safe, orderly and proper use of said premises and facilities.

3. The party of the second part shall provide adequate labor to pick up, collect, and dispose of all litter, trash, rubbish, etc., from the premises herein described and will maintain the property in a neat and sightly condition.

4. The party of the second part shall not erect or maintain or permit the erection or maintenance of any advertising sign or advertising device without a prior written permit from the party of the first part.

IT IS FURTHER EXPRESSLY UNDERSTOOD AND AGREED that the permanent easements for park and recreational purposes previously granted by the party of the first part to the party of the second part under instruments dated the 4th day of August, 1964 and the 11th day of December, 1968 over parcels of land which are included in the premises described herein are hereby cancelled and terminated and superseded by the easement granted herein as of the day and year first above written.

IT IS FURTHER EXPRESSLY UNDERSTOOD AND AGREED that the easement granted herein is subject to any and all other easements granted previously by the party of the first part to parties other than the party of the second part in, over or under parcels of land

which are included in the premises described herein.

IT IS FURTHER EXPRESSLY UNDERSTOOD AND AGREED that the permanent easement hereby granted does not convey any fee in the lands other than an easement for park and recreational purposes hereinabove set forth.

IT IS FURTHER EXPRESSLY UNDERSTOOD AND AGREED that the party of the second part covenants and agrees to indemnify and hold harmless the State of New York and the Long Island State Park Commission from and against any and all claims, suits, losses, damages or injuries to persons or property arising out of or in connection with the use of said premises by the party of the second part or others.

IT IS FURTHER EXPRESSLY UNDERSTOOD AND AGREED that the party of the first part will not change or affect the flow of water in the natural waterways and lake in and through land described herein by mechanical or other means at a point north of said land without forty-eight hours prior written notice to the party of the second part, except in cases of emergency.

AND THIS INSTRUMENT is given, however, on the express condition that in the event said lands are used for other than the purposes hereinbefore set forth, or in the event the said Village park and recreational facility is discontinued, or abandoned, or in the event the party of the second part does not comply with all the terms and conditions of this agreement or any of them, then and in either event this grant shall terminate and all rights herein shall terminate and all rights herein granted shall cease and determine, and the Long Island State Park Commission shall be entitled to take immediate physical possession of the premises above described without notice to the grantee, and without making application to the courts to dispossess or otherwise remove the party of the second part therefrom, and without the institution of an action in ejection, and the party of the second part covenants and agrees, in the event

of such re-entry by the party of the first part for non-compliance with the terms and conditions of this grant, or for any other reason, to remove promptly and without expense to the party of the first part, all structures, equipment and fixtures that it has erected, placed or installed in or on said premises and to restore the property as nearly as possible to its original condition.

The party of the second part, for itself and its succesors does hereby covenant and agree to comply with all of the terms and conditions of this agreement, on penalty of forfeiture of all rights hereunder.

THIS GRANT OF EASEMENT SHALL NOT BE ASSIGNED OR TRANSFERRED.

IN WITNESS WHEREOF, the parties hereto have caused these presents to be signed and sealed the day and year first above written.

LONG ISLAND STATE PARK COMMISSION

By s/ Frank Champ
Assistant General Manager

Attest:

s/ VINCENT LEITCH
Administrative Officer

INCORPORATED VILLAGE OF BABYLON

By s/ Gilbert C. Hance

Attest:

s/ Anita T. Baxter

STATE OF NEW YORK)
: SS.:
COUNTY OF SUFFOLK)

On this 2nd day of March, 1971, before me personally came FRANK CHAMP, to me known, who being by duly sworn did depose and say that he resides at No Number, No Street, Belmont Lake State Park, Town of Babylon, County of Suffolk, State of New York, that he is the Assistant General Manager of the Long Island State Park Commission, the Commission described in and which executed the foregoing instrument; that he knows the seal of said Commission, that the seal affixed to said instrument is such official seal, and that it was so affixed by order of the said Commission and that he signed his name thereto by like order.

s/ Richard C. French
Notary Public
Richard C. French
Notary Public, State of New York
No. 52-6402549
Qualified in Suffolk County
Commission Expires March 30, 1972

STATE OF NEW YORK)
:
COUNTY OF SUFFOLK)

On this 2nd day of March, 1971, before me personally came Gilbert C. Hance to me known, who being by me duly sworn, did depose and say that he resides at 130 Little East Neck Rd. S. Babylon N.Y., that he is the Mayor of the Incorporated Village of Babylon, the Village described in and which executed the foregoing instrument, that he knows the seal of said Village; that the seal affixed to said instrument is such official seal, and that it was so affixed pursuant to a resolution of the Board of Trustees of said Village and that he signed his name thereto pursuant to said resolution.

s/ Wilbur H. Schneider
Notary Public
Wilbur H. Schneider
Notary Public, State of New York
No. 52-3519350
Residence in Suffolk County
Commission Expires March 30, 1971