Montgomery County Culvert Replacement, New York
Towns of Florida and Amsterdam, Montgomery County, NY
Environmental Review Record

Prepared by Tetra Tech Inc.
1999 Harrison Street, Suite 500
Oakland, CA 94612

New York State Homes and Community Renewal
Governor's Office of Storm Recovery
38-40 State Street
Albany, NY 12207

May 27, 2017

Montgomery County Culvert Replacement, New York

Environmental Review Record

May 27, 2017

Project Name:	Montgomery County Culvert Replacement
Project Location:	Towns of Florida and Amsterdam, Montgomery County, NY
Federal Agency:	US Department of Housing and Urban Development
Responsible Entity:	New York State Homes and Community Renewal
Responsible Agency's Certifying Officer:	Lori A. Shirley, Governor's Office of Storm Recovery, Certifying Officer
Project Sponsor:	Montgomery County
Primary Contact:	Mathew Ossenfort County Executive (518) 853-4304 ce@co.montgomery.ny.us
Project NEPA Classification:	24 CFR 58.35(a) (Categorical Exclusion Subject To 58.5)

Certification	The undersigned hereby certifies that New York State Homes and Community Renewal has conducted an environmental review of the project identified above and prepared the attached environmental review record in compliance with all applicable provisions of the National Environmental Policy Act of 1969, as amended (42 USC Sec. 4321 et seq.) and its implementing regulations at 24 CFR Part 58.
Signature	Lori A. Shirley – Certifying Officer

Environmental Review Prepared By:	Consultant:	Tetra Tech, Inc.
	Address:	1999 Harrison Street, Suite 500 Oakland, CA 94612

CERTIFICATION OF NEPA CLASSIFICATION

It is the finding of the New York State Housing Trust Fund Corporation that the activity(ies) proposed in its 2017 NYS CDBG-DR project, the Montgomery County Culvert Replacement Project is:

Check the applicable classification.

☐ Exempt as defined in 24 CFR 58.34 (a).

☐ Categorically Excluded as defined in 24 CFR 58.35(b).

☐ Categorically Excluded as defined in 24 CFR 58.35(a) and no activities are affected by federal environmental statues and executive orders [i.e., exempt under 58.34(a)(12)].

☒ Categorically Excluded as defined in 24 CFR 58.35(a) and some activities are affected by federal environmental statues and executive orders.

☐ "Other" neither exempt (24 CFR 58.34(a)) nor categorically excluded (24 CFR 58.35).

☒ Part or all of the project is located in an area identified as a floodplain or wetland. For projects located in a floodplain or wetland, evidence of compliance with Executive Orders 11988 and/or 11990 is required.

For activities excluding those classified as "Other", attached is the appropriate Classification Checklist (Exhibit 2-4) that identifies each activity and the corresponding citation.

Lori A Shirley

Signature of Certifying Officer

May 27, 2017
Date

Lori A. Shirley
Director, Bureau of Environmental Review and Assessment
Governor's Office of Storm Recovery

NEPA CLASSIFICATION CHECKLIST FOR
CATEGORICALLY EXCLUDED ACTIVITIES [24 CFR 58.35(a)]

☒ Acquisition, repair, improvement, reconstruction, or rehabilitation of public facilities and improvements (other than buildings) when the facilities and improvements are in place and will be retained in the same use without change in size or capacity of more than 20 percent (e.g., replacement of water or sewer lines, reconstruction of curbs and sidewalks, repaving of streets)

☐ Special projects directed to the removal of material and architectural barriers that restrict the mobility of and accessibility to elderly and handicapped persons.

☐ Rehabilitation of buildings and improvements when the following conditions are met:

(i) In the case of a building for residential use (with one to four units), the density is not increased beyond four units, and the land use is not changed;
(ii) In the case of multifamily residential buildings:
  a. Unit density is not changed more than 20 percent;
  b. The project does not involve changes in land use from residential to non-residential; and
  c. The estimated cost of rehabilitation is less than 75 percent of the total estimated cost of replacement after rehabilitation.
(iii) In the case of non-residential structures, including commercial, industrial, and public buildings:
  a. The facilities and improvements are in place and will not be changed in size or capacity by more than 20 percent; and
  b. The activity does not involve a change in land use, such as from non-residential to residential, commercial to industrial, or from one industrial use to another.

☐ An individual action on up to four dwelling units where there is a maximum of four units on any one site. The units can be four one-unit buildings or one four-unit building or any combination in between. (This does not apply to rehabilitation of a building for residential use).

☐ An individual action on a project of five or more housing units developed on scattered sites when the sites are more than 2,000 feet apart and there are not more than four housing units on any one site. (This does not apply to rehabilitation of a building for residential use).

☐ Acquisition (including leasing) or disposition of, or equity loans on an existing structure, or acquisition (including leasing) of vacant land provided that the structure or land acquired, financed, or disposed of will be retained for the same use.

☐ Combinations of the above activities.

Lori A Shirley _____ May 27, 2017 _____

Signature of Certifying Officer Date

Lori A. Shirley, Director, Bureau of Environmental Review and Assessment, Governor's Office of Storm Recovery

CERTIFICATION OF SEQRA CLASSIFICATION

It is the finding of the New York State Housing Trust Fund Corporation that the activity(ies) proposed in its 2107 NYS CDBG-DR project, the Montgomery County Culvert Replacement Project constitutes a:

Check the applicable classification:

- ☐ Type I Action (6NYCRR Section 617.4)
- ☒ Type II Action (6NYCRR Section 617.5)
- ☐ Unlisted Action (not Type I or Type II Action)

Check if applicable:

- ☐ Environmental Impact Statement (EIS) Prepared
  - ☐ Draft EIS
  - ☐ Final EIS

Lori A Shirley
_____ May 27, 2017 _____
Signature of Certifying Officer Date

Lori A. Shirley
Director, Bureau of Environmental Review and Assessment
Governor's Office of Storm Recovery

Description of the Proposed Project [24 CFR 50.12 & 58.32; 40 CFR 1508.25]**:**
Montgomery County is proposing to replace 11 existing culverts in the Town of Florida and the Town of Amsterdam, at these locations:

- Culvert 4A at McKinney Road, approximately 1,600 feet north of Lost Valley Road in the Town of Florida;
- Culvert 4B at McKinney Road, approximately 3,200 feet north of Peck Road in the Town of Florida;
- Culvert 5B at Bullshead Road, approximately 450 feet north of Thayer Road in the Town of Florida;
- Culvert 6A at Pattersonville Road, approximately 100 feet south of Bullshead Road in the Town of Florida;
- Fort Hunter Road, approximately 560 feet southeast of Morris Road in the Town of Florida;
- Hartley Road, approximately 900 feet southeast of Snooks Corners Road in the Town of Florida;
- Langley Road, approximately 700 feet southwest of Thayer Road in the Town of Florida;
- McKay Road No. 1 at McKay Road, approximately 600 feet south of McDonald Drive in the Town of Amsterdam;
- McKay Road No. 2 at McKay Road, approximately 2,000 feet south of McDonald Drive in the Town of Amsterdam;
- Strevy Lane, approximately 1,100 feet northwest of its intersection with Fort Hunter Road in the Town of Florida; and
- Shellstone Road, approximately 200 feet southwest of State Route 30/Sulphur Springs Road in the Town of Florida.

The Project is designed to reduce flooding and mitigate stream bank and roadway erosion from rainfall that could not be accommodated by the existing, undersized culverts. The smaller culverts would be made of high-density polyethylene (HDPE). Many of the smaller culverts are in ditches rather than streams. Four-sided, precast-concrete box culverts would be used for the larger culverts, for ease of construction (requiring no footings as with a three-sided, open bottom culvert), reduced scour concerns, and lower costs. Each culvert bottom would be filled to an appropriate depth with natural streambed material (embedment). Roadway restoration would be considered. It is anticipated that construction would involve substantial earthwork that would occur in the existing rights-of-way of each road. Each culvert would exceed the carrying capacity for a 50-year storm.

The proposed changes at individual culverts are discussed in the sections below and shown in in detail in the design drawings, Figures 1a through 1k.

Culvert 4A. The existing 72-inch, corrugated-metal pipe (CMP) culvert with a concrete mid-section conveying an unnamed stream beneath McKinney Road would be removed, realigned,

and replaced with an 84-inch, high-density, polyethylene (HDPE) culvert (See **Figure 1a**). The bottom of the proposed new culvert would have a 17-inch embedment (i.e., be filled to a depth of 17 inches) of natural streambed material. The existing stone headwall at the inlet of the existing culvert would be removed. The Project at this site would include stream reshaping, and rip-rap would be installed at the inlet and outlet of the proposed culvert.

Culvert 4B. The existing 84-inch CMP culvert conveying an unnamed stream beneath McKinney Road would be removed, realigned, and replaced with a 144- by 144-inch box culvert (See **Figure 1b**). The bottom of the proposed new culvert would have a 29-inch embedment of natural streambed material. The existing concrete headwall and wing walls at the inlet of the existing culvert, and the existing spillway would be removed. The Project at this site would include stream reshaping, and rip-rap would be installed at the inlet and outlet of the proposed culvert.

Culvert 5B. The existing 48-inch HDPE culvert conveying an unnamed stream beneath Bullshead Road would be removed, realigned, and replaced with a 66-inch HDPE culvert with a 13-inch embedment of natural streambed material (See **Figure 1c**). Stacked stone at the inlet and outlet of the existing culvert would be removed. The Project at this site would include stream reshaping, and rip-rap would be installed at the inlet and outlet of the proposed culvert.

Culvert 6A. The existing 60-inch CMP culvert conveying an unnamed stream beneath Pattersonville Road at the east side of the intersection with Bullshead Road would be removed, realigned, and replaced with a 96- by 84-inch box culvert (See **Figure 1d**). The bottom of the proposed new culvert would have a 17-inch embedment of natural streambed material. The Project at this site would include stream reshaping, and rip-rap would be installed at the inlet and outlet of the proposed culvert.

Fort Hunter Road. The existing 3-foot by 5.25-foot concrete box culvert conveying an unnamed stream beneath Fort Hunter Road would be removed and replaced with an 84-inch HDPE culvert (See **Figure 1e**). The bottom of the proposed new culvert would have a 17-inch embedment of natural streambed material. The existing headwall and wing walls at the inlet and outlet of the existing culvert would be removed. The Project at this site would include stream reshaping, and rip-rap would be installed at the inlet and outlet of the proposed culvert.

Hartley Road. The existing 48-inch CMP culvert conveying an unnamed stream beneath Hartley Road would be removed and replaced with an 84-inch HDPE culvert (See **Figure 1f**). The bottom of the proposed new culvert would have a 17-inch embedment of natural streambed material. The existing headwall of the existing culvert would be removed. Rip-rap would be installed at the inlet and outlet of the proposed culvert.

Langley Road. The existing 36-inch CMP culvert crossing Langley Road, adjacent to the intersection with Covey Road, would be removed and replaced with a 60- by 36-inch box culvert (See **Figure 1g**). The bottom of the proposed new culvert would have a 7-inch embedment of natural streambed material. The existing concrete headwall and wing walls at the inlet and stone

headwall at the outlet of the existing culvert would be removed. The Project at this site would include stream reshaping, and rip-rap would be installed at the inlet and outlet of the proposed culvert. Stone would be installed at the ditch at the inlet of the proposed culvert, and the outlet stream would be diverted to the existing stream, approximately 1,200 feet to the west. Five trees with a diameter at breast height of 3 inches or more would be removed to accommodate the culvert pipe.

McKay Road No. 1. The three existing CMP culverts would be replaced by larger HDPE culverts (See **Figure 1h**). Rip-rap would be installed at the ends of each culvert. The 24-inch culvert extending along the stone driveway to the west of McKay Road, extending to the ditch on the east side of the road, would be replaced with a 36-inch culvert and would include a 7-inch embedment of natural streambed material. The 3- by 4-foot culvert in the same area that extends to the ditch on the west side of the road would be removed, realigned, and replaced by a 60-inch culvert with a 12-inch embedment of natural streambed material. The 24-inch culvert, carrying the ditch along the east side of the road beneath an asphalt drive, would be replaced by a 36-inch culvert with a 7-inch embedment of natural streambed material.

McKay Road No. 2. The existing 30-inch reinforced concrete pipe that conveys Fitzpatrick Creek under McKay Road would be removed, realigned, and replaced by a 60-inch HDPE culvert with a 12-inch embedment of natural streambed material (See **Figure 1i**). The Project at this site would include stream reshaping, and rip-rap would be installed at each end of the culvert.

Strevy Lane. The existing 30-inch reinforced concrete pipe that conveys an unnamed stream under Strevy Lane near its intersection with State Route 30 would be removed, realigned, and replaced with a 60-inch HDPE culvert (See **Figure 1j**). The bottom of the proposed new culvert would be lined with natural streambed material. The Project at this site would include stream reshaping, and rip-rap would be installed at the inlet and outlet of the proposed culvert.

Shellstone Road. The existing 9.5- by 6.83-foot concrete box culvert conveying an unnamed stream beneath Shellstone Road near its intersection with State Route 5S would be removed and replaced with a 12- by 7-foot box culvert (See **Figure 1k**). The bottom of the proposed new culvert would have a 17-inch embedment of natural streambed material. The Project at this site would include stream reshaping, and rip-rap would be installed at the inlet and outlet of the proposed culvert.

Statement of Purpose and Need for the Proposal [40 CFR 1508.9(b)]:
In the Town of Amsterdam, the flood waters from Hurricane Irene eroded the banks of local creeks, caused property damage, and washed out many roads. Storm water runoff down steep grades in the Town caused backups at undersized culverts. Portions of the existing storm water management system became clogged with debris and did not function during the storms, resulting in localized flooding.

Following the storms, during the New York Rising Community Reconstruction (NYRCR) planning process, the Town determined that improved storm water management systems are needed in these areas. The City of Amsterdam, Town of Amsterdam, and the Town of Florida developed a community vision to anticipate and mitigate flood risks, limit impacts to property and infrastructure when flooding is unavoidable, and respond efficiently and recover quickly, to protect vulnerable populations and the community's quality of life. The community presented goals to mitigate damage to transportation corridors and infrastructure and recommended upgrades to the storm water and sewer infrastructure throughout the community.

The purpose of the Project is to accommodate storm water from a 100-year flood, reduce flooding, and mitigate roadway and stream bank erosion.

Existing Conditions and Trends [24 CFR 58.40(a)]:
New York State experienced a number of storms over the last decade (i.e., Hurricane Irene, Tropical Storm Lee, and Hurricane Sandy) that caused substantial damage. This trend increased the need for improved storm water management systems and mitigation of damage to transportation corridors to support storm-stricken communities. In the Towns of Florida and Amsterdam, the flood waters from Hurricane Irene eroded the banks of local creeks and caused property damage to residences. Many roads were washed out. Steep grades in the towns caused storm water runoff to flow down hillsides and collect and backup at undersized culverts. The proposed culvert replacement would mitigate the damage to the existing culverts, allowing the restored use of damaged roadways, protect them from damage during future storms, and would increase the towns' resiliency.

Standard Conditions for All Projects

Any change to the approved scope of work requires re-evaluation by the Certifying Officer for compliance with NEPA and other laws and Executive Orders.

This review does not address all federal, state and local requirements. Acceptance of federal funding requires the recipient to comply with all federal state and local laws. Failure to obtain all appropriate federal, state and local environmental permits and clearances may jeopardize federal funding.

Funding Information

Estimated Total HUD Funded Amount:
$ 2,679,361

Estimated Total Project Cost (HUD and non-HUD funds) [24 CFR 58.32(d)]:
$ 2,679,361

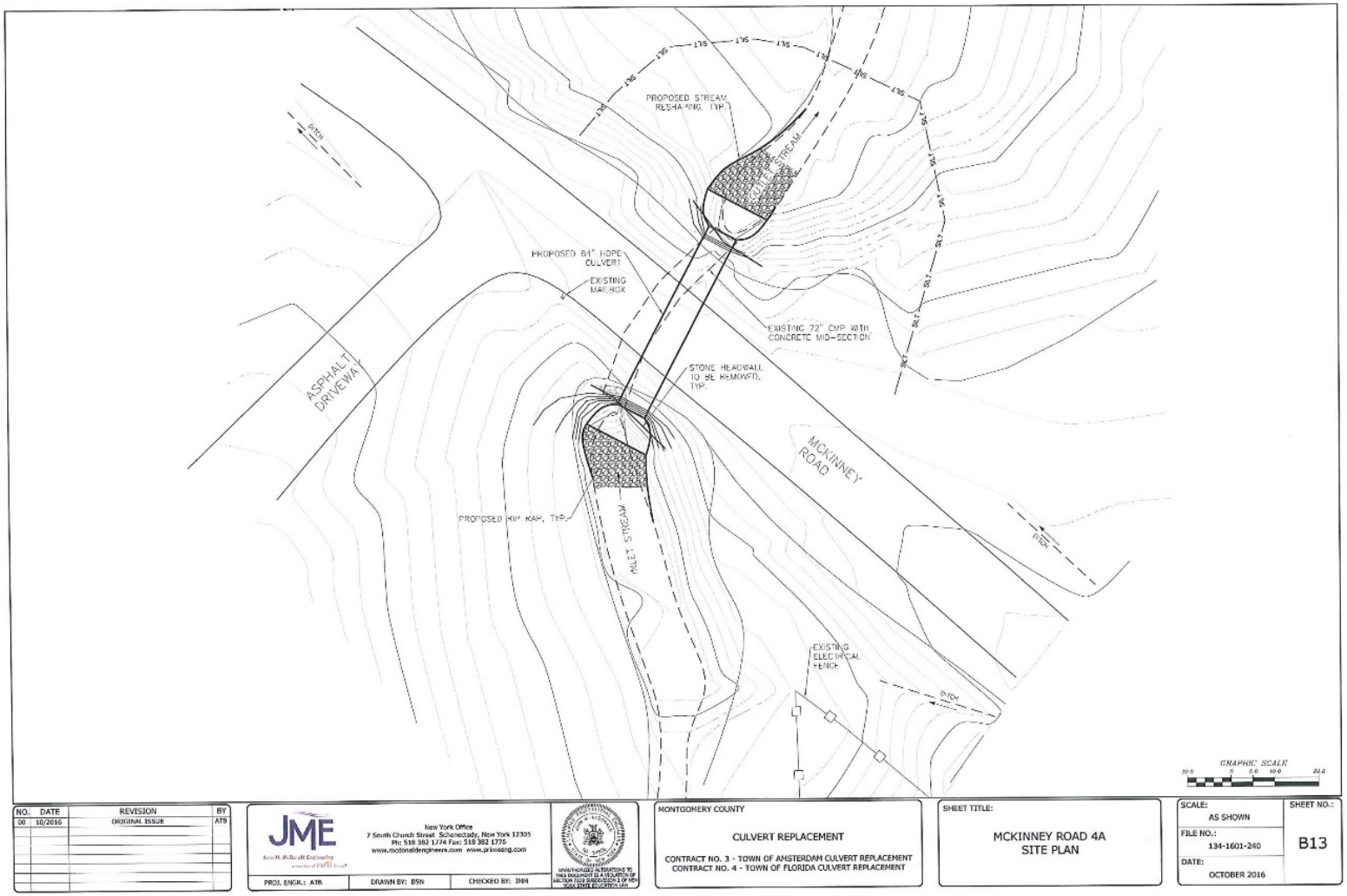

Figure 1a – Site Plan

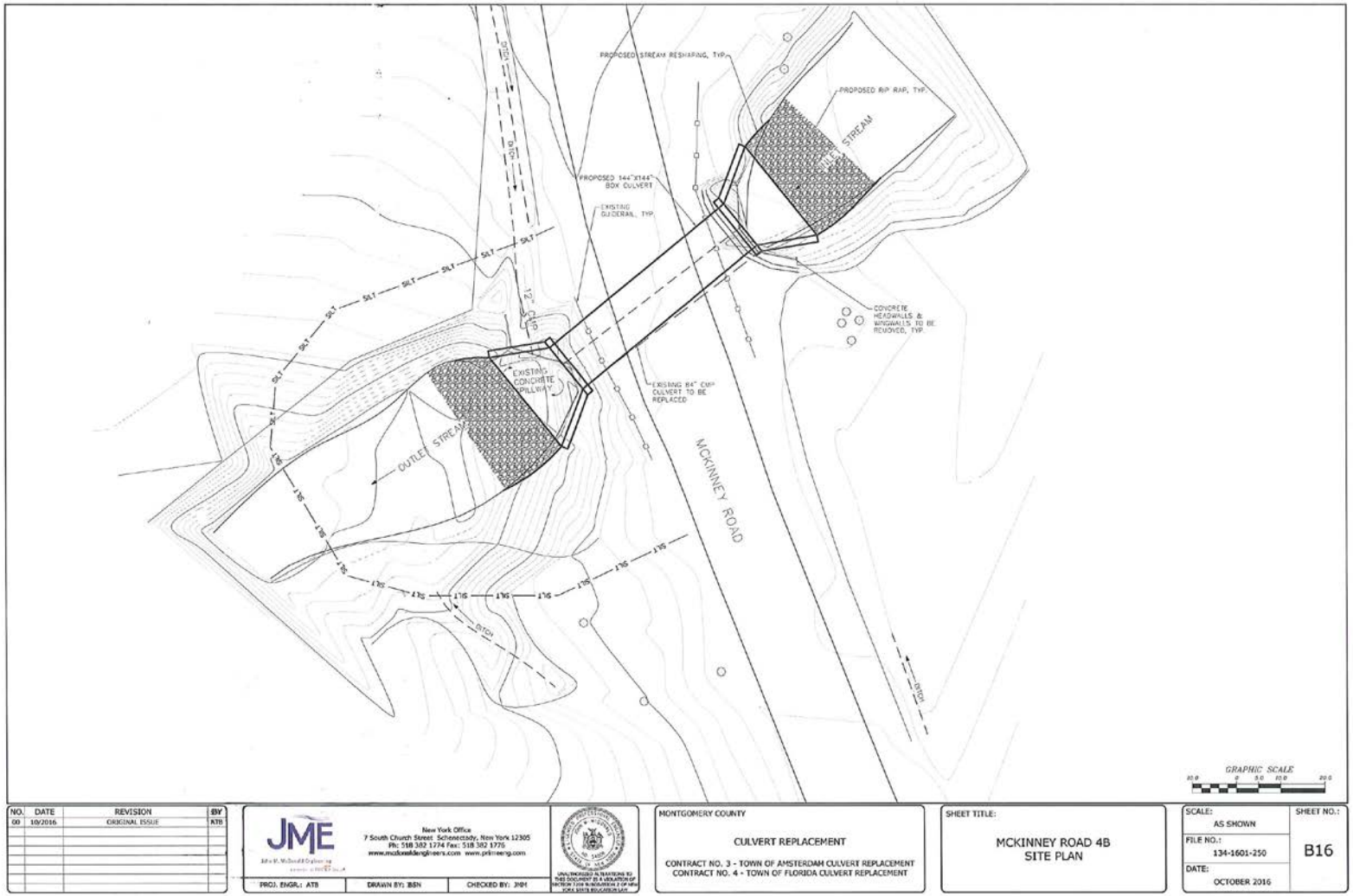

Figure 1b – Site Plan

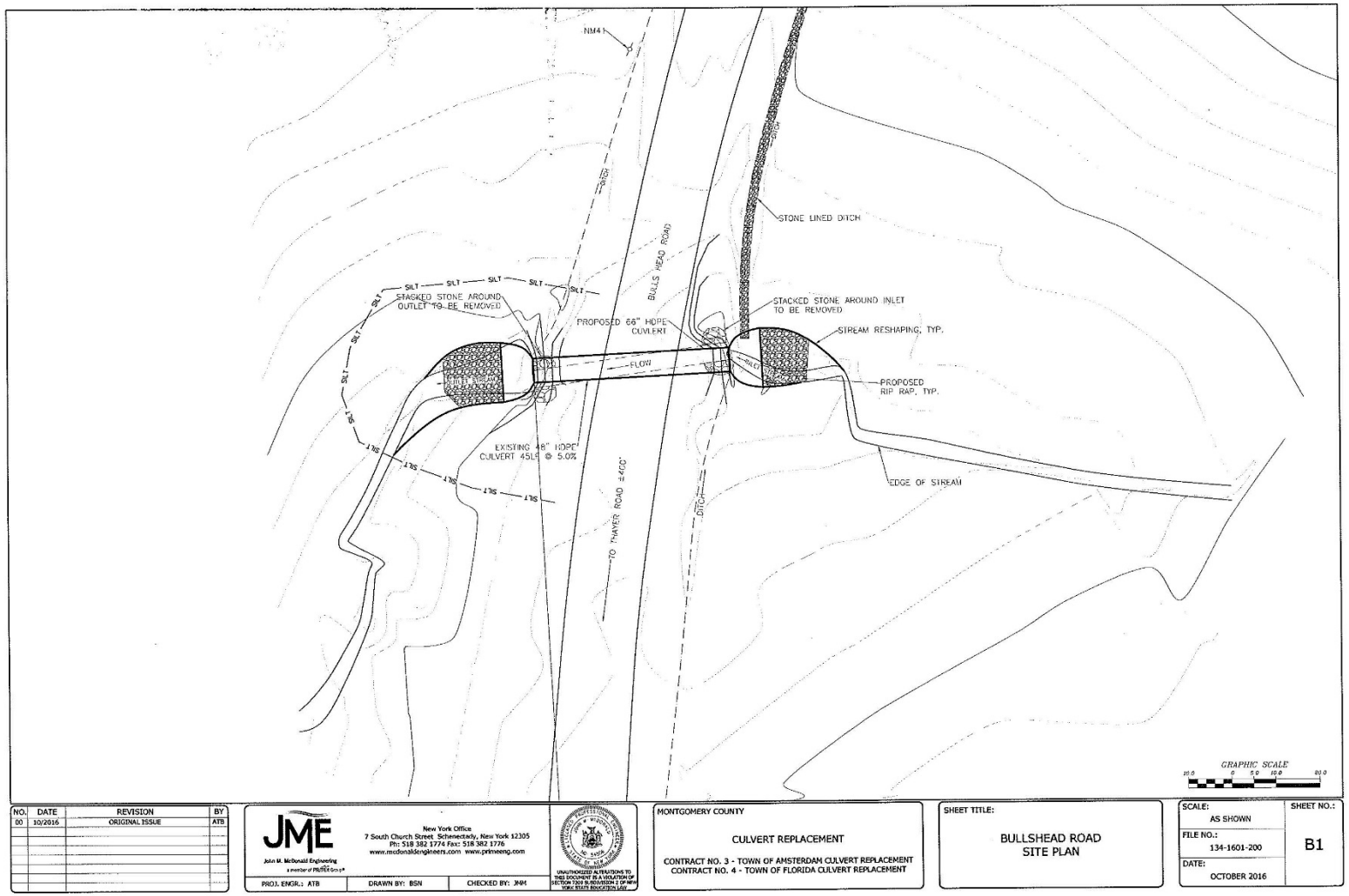

Figure 1c – Site Plan

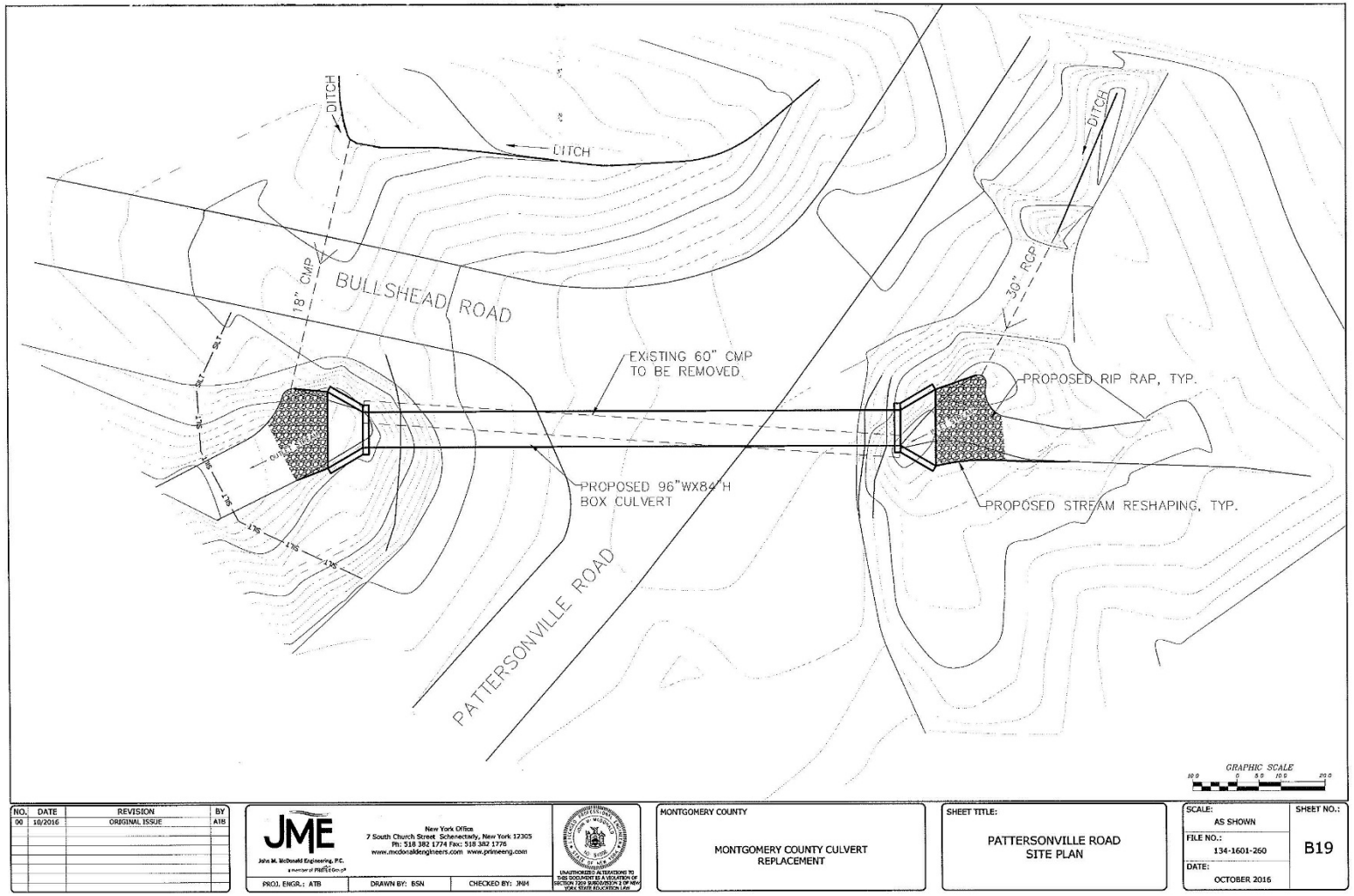

Figure 1d – Site Plan

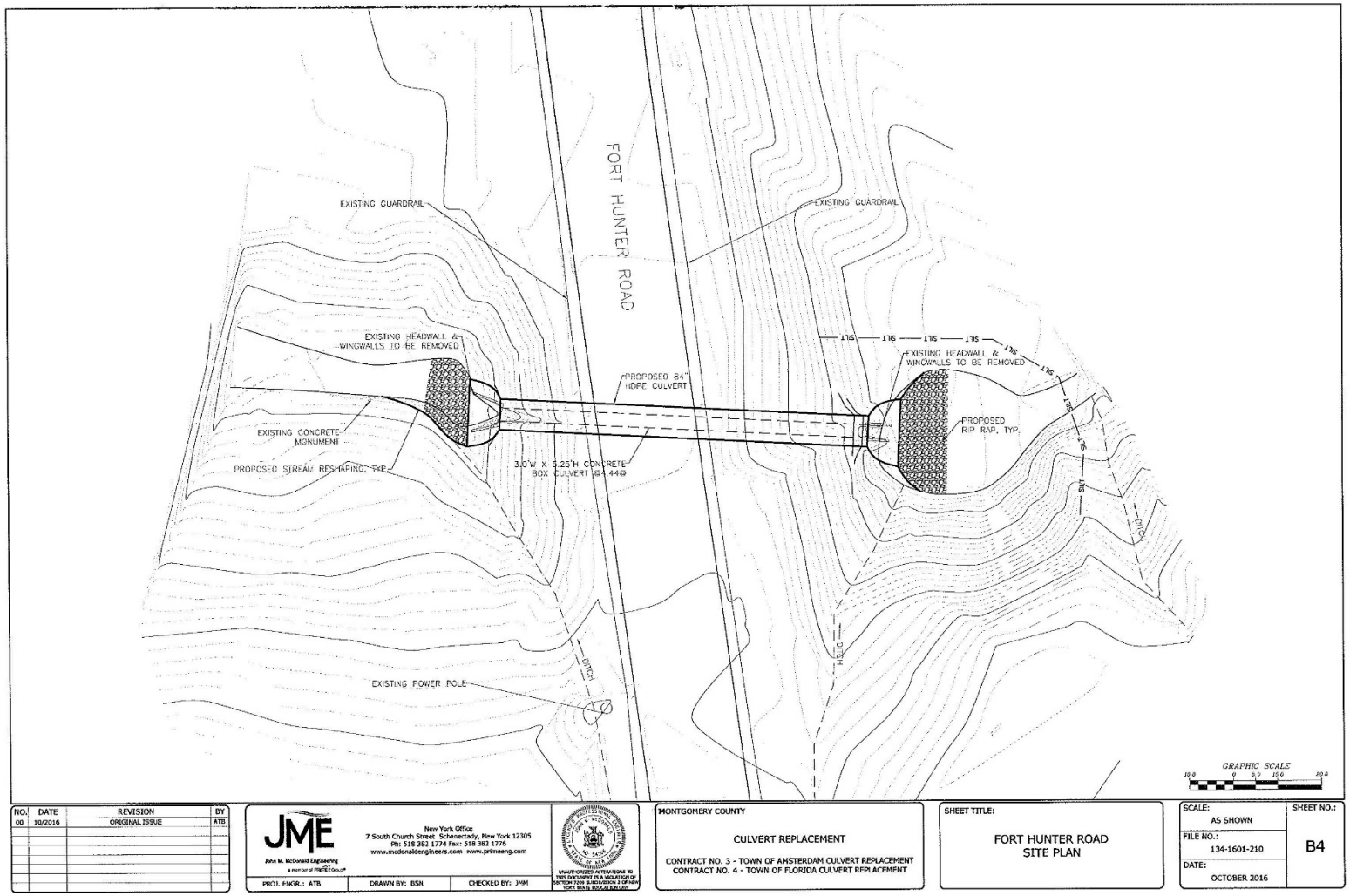

Figure 1e – Site Plan

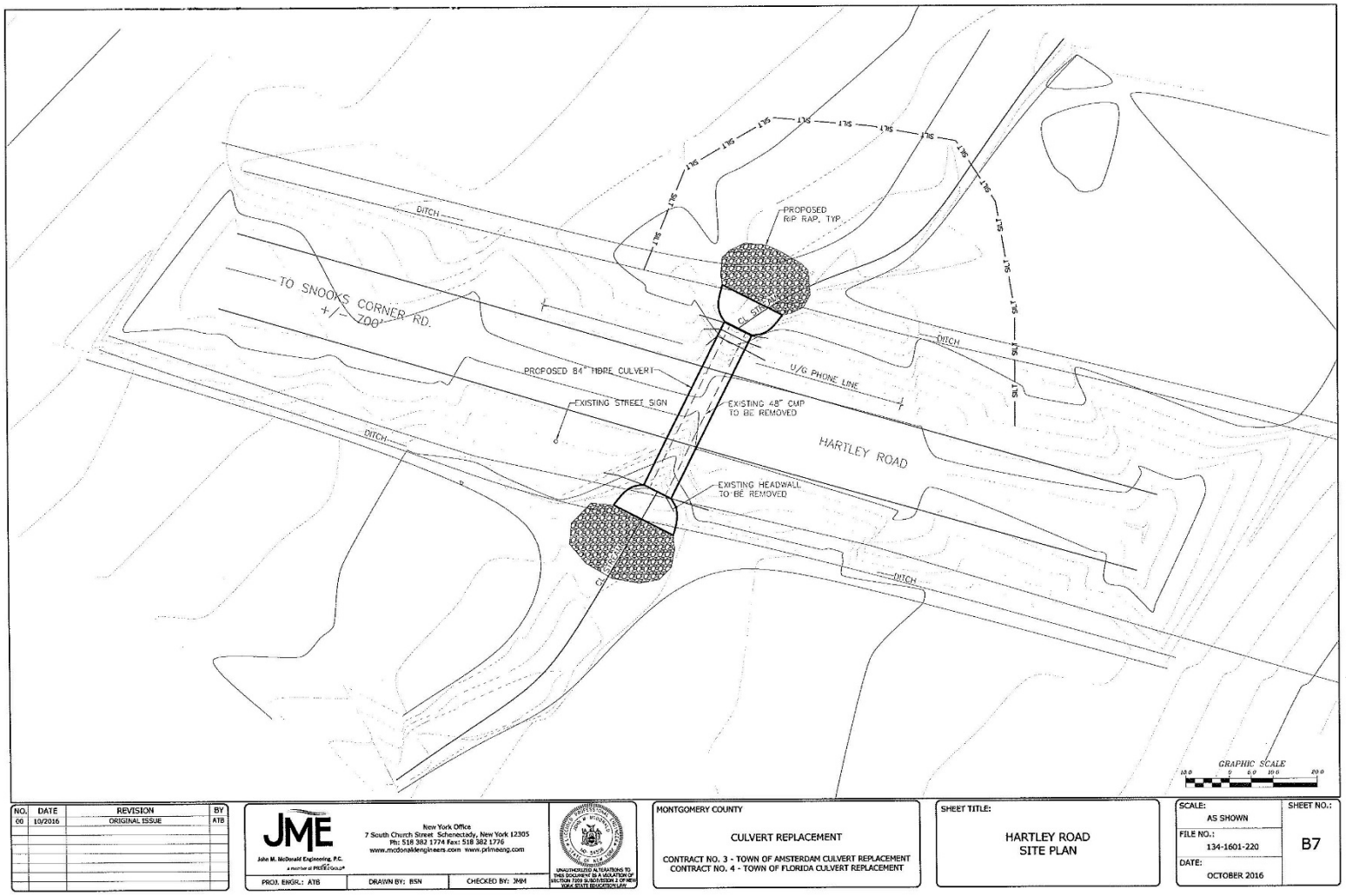

Figure 1f – Site Plan

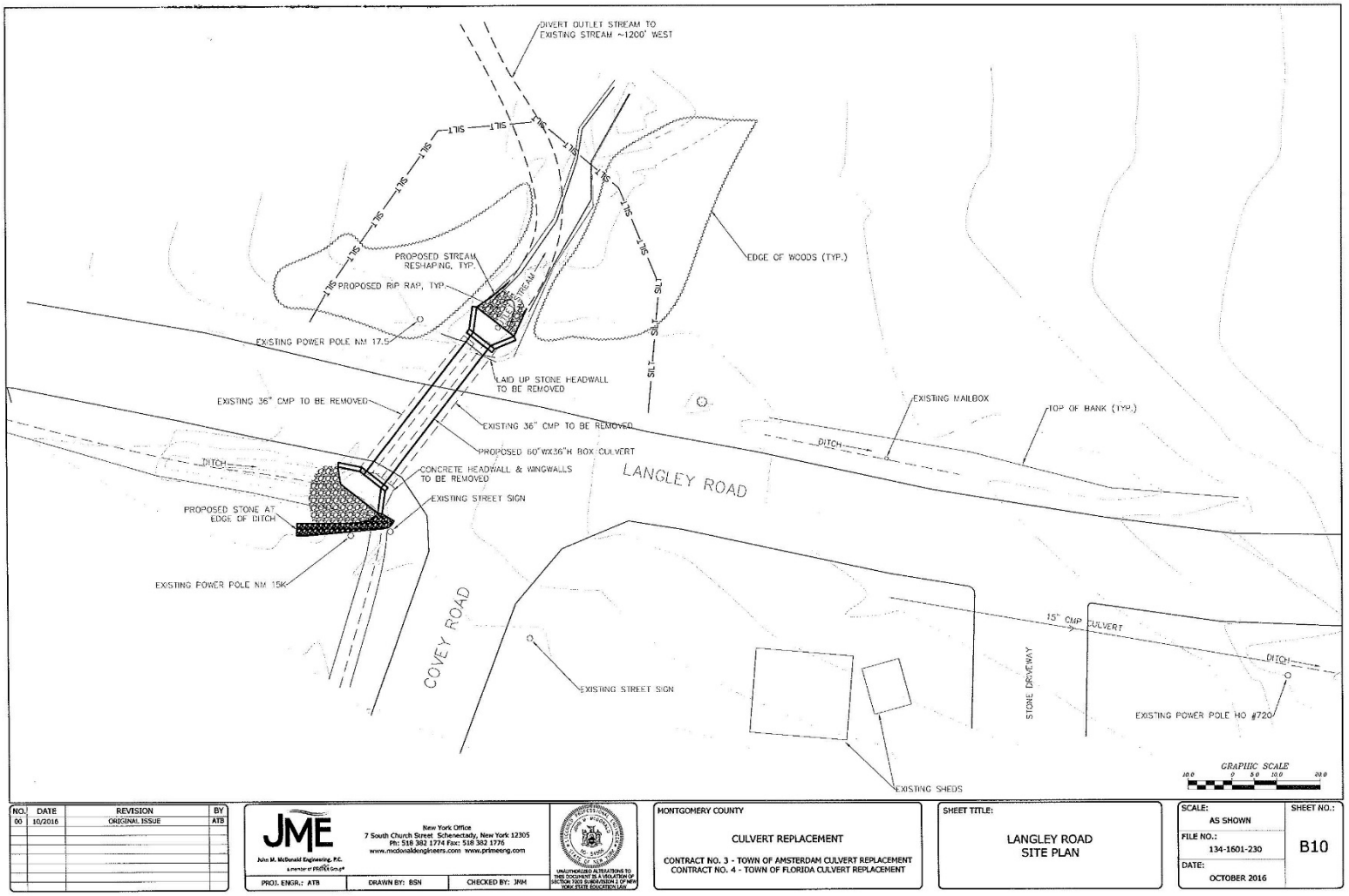

Figure 1g – Site Plan

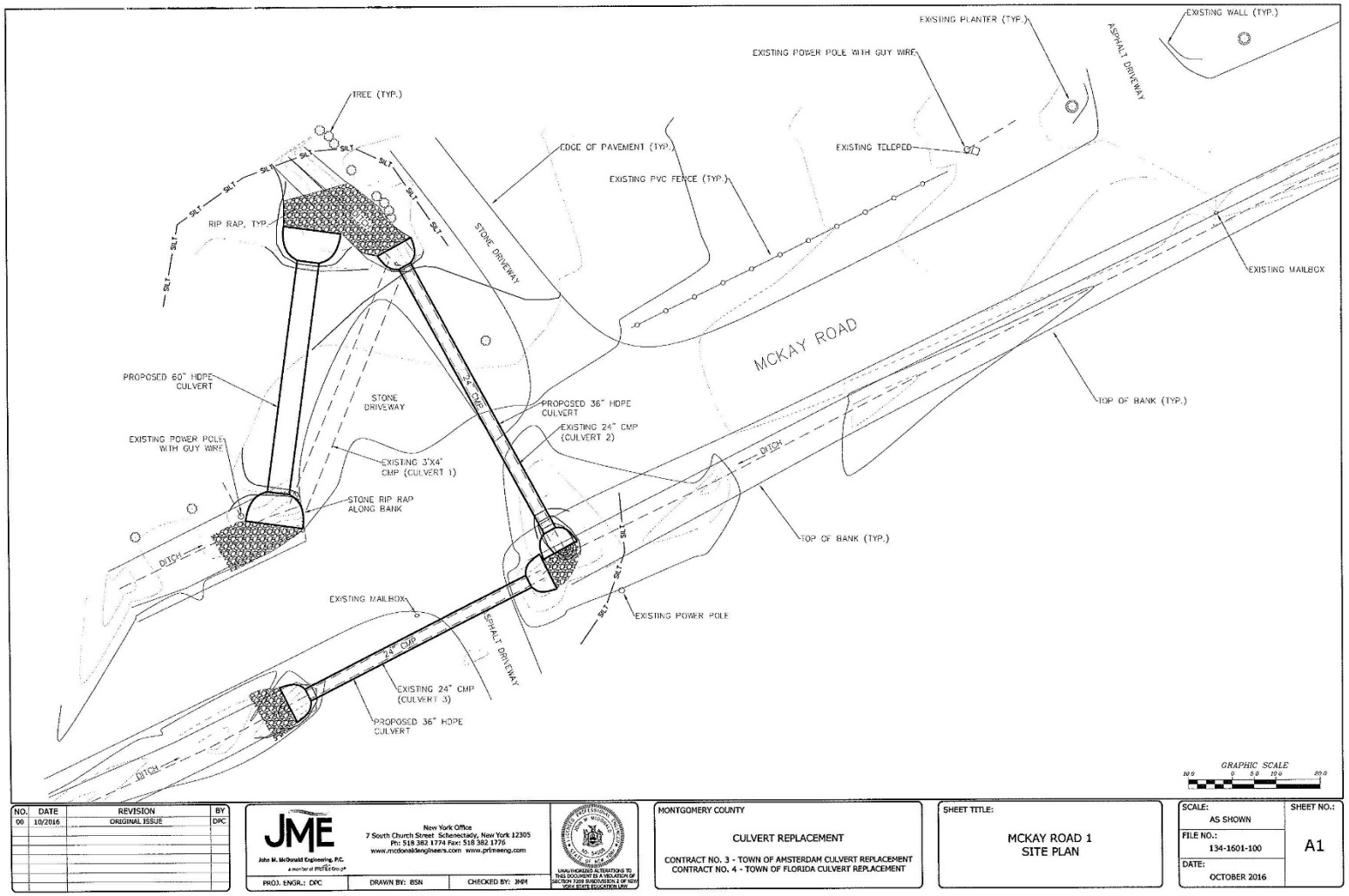

Figure 1h – Site Plan

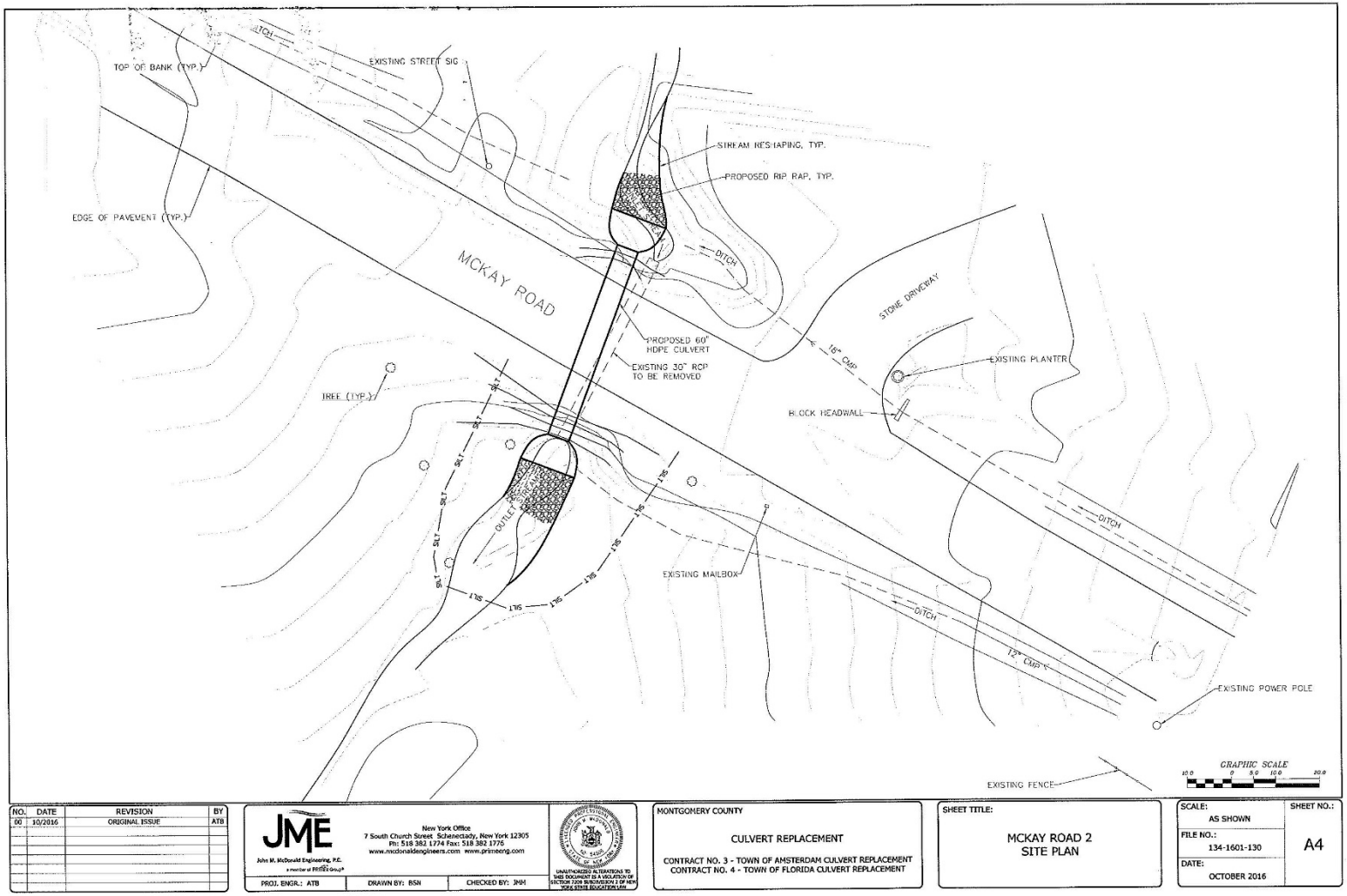

Figure 1i – Site Plan

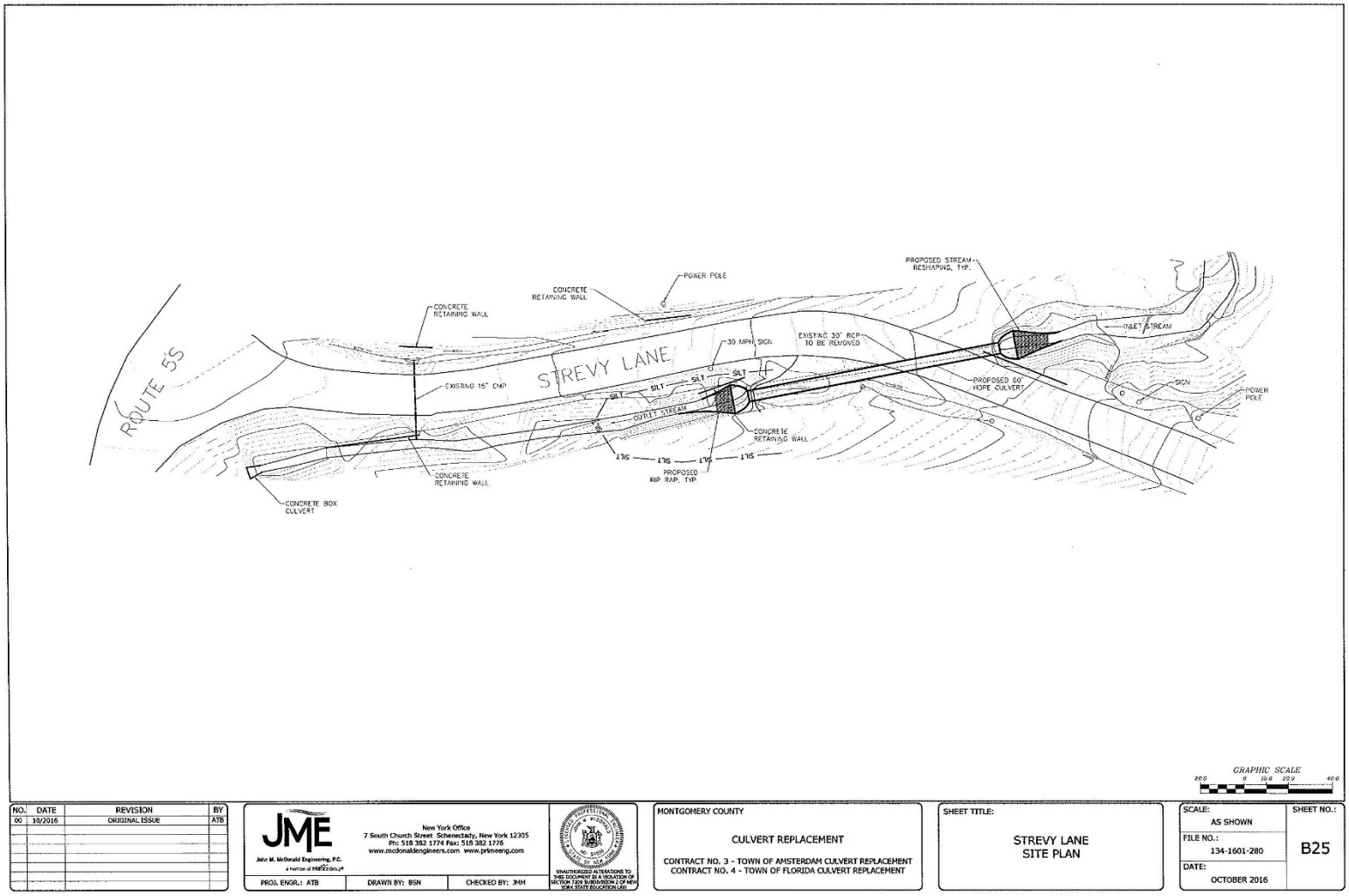

Figure 1j – Site Plan

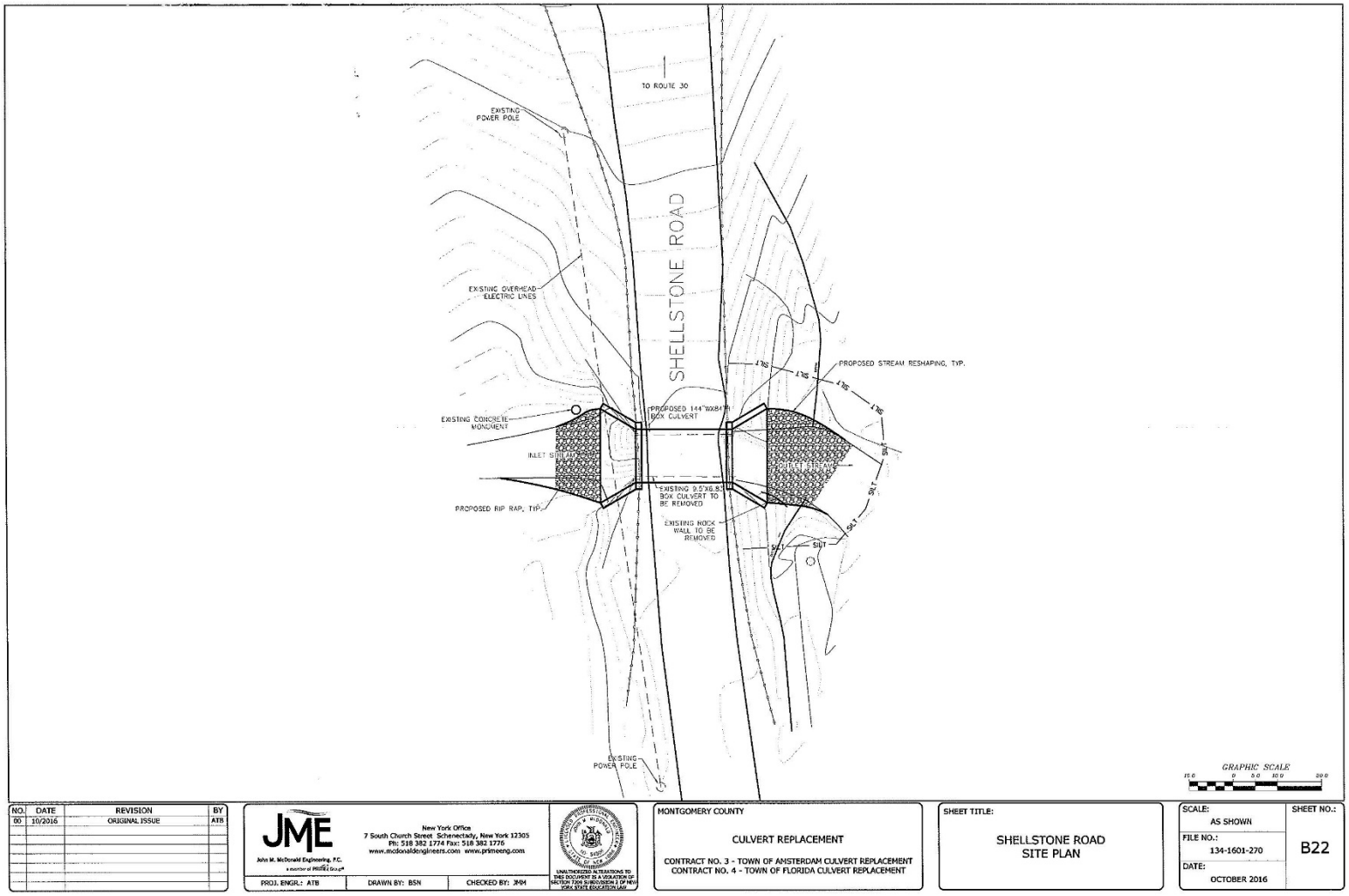

NO.	DATE	REVISION	BY
00	10/2016	ORIGINAL ISSUE	ATB

JME
John M. McDonald Engineering, P.C.
a member of PRIME Group
New York Office
7 South Church Street Schenectady, New York 12305
Ph: 518 382 1774 Fax: 518 382 1776
www.mcdonaldengineers.com www.primeeng.com

PROJ. ENGR.: ATB | DRAWN BY: BSN | CHECKED BY: JMM

UNAUTHORIZED ALTERATIONS TO THIS DOCUMENT IS A VIOLATION OF SECTION 7209 SUBDIVISION 2 OF NEW YORK STATE EDUCATION LAW

MONTGOMERY COUNTY

CULVERT REPLACEMENT

CONTRACT NO. 3 - TOWN OF AMSTERDAM CULVERT REPLACEMENT
CONTRACT NO. 4 - TOWN OF FLORIDA CULVERT REPLACEMENT

SHEET TITLE:

SHELLSTONE ROAD
SITE PLAN

SCALE: AS SHOWN
FILE NO.: 134-1601-270
DATE: OCTOBER 2016
SHEET NO.: B22

Figure 1k – Site Plan

Compliance with 24 CFR 58.5 and 58.6 Laws and Authorities

Record below the compliance or conformance determinations for each statute, executive order, or regulation. Provide credible, traceable, and supportive source documentation for each authority. Where applicable, complete the necessary reviews or consultations and obtain or note applicable permits of approvals. Clearly note citations, dates/names/titles of contacts, and page references. Attach additional documentation as appropriate.

Compliance Factors: Statutes, Executive Orders, and Regulations listed at 24 CFR §58.5 and §58.6	Are formal compliance steps or mitigation required?	Compliance determinations
STATUTES, EXECUTIVE ORDERS, AND REGULATIONS LISTED AT 24 CFR 58.6		
Airport Hazards 24 CFR Part 51 Subpart D	Yes ☐ No ☒	Based on HUD guidance in Fact Sheet #D1, the National Plan of Integrated Airport Systems (NPIAS) was reviewed for civilian, commercial service airports near the Project sites, as projects within 2,500 feet of a civil airport require consultation with the appropriate civil airport operator. No civilian airports are within 2,500 of the Project site, and no military airports are within 15,000 feet of the Project sites. (See **Appendix A**, Figures) **Source: 3, 4**
Coastal Barrier Resources Coastal Barrier Resources Act, as amended by the Coastal Barrier Improvement Act of 1990 [16 USC 3501]	Yes ☐ No ☒	The Project sites are not in a Coastal Barrier Resources Area as defined by the state's Coastal Zone Management Program. (See **Appendix A**, Figures) **Source: 5, 6**
Flood Insurance Flood Disaster Protection Act of 1973 and National Flood Insurance Reform Act of 1994 [42 USC 4001-4128 and 42 USC 5154a]	Yes ☐ No ☒	The Project sites are not in a mapped Special Flood Hazard Area (SFHA) Zone, as shown on the Federal Emergency Management Agency (FEMA) Flood Insurance Rate Map (FIRM) Community Panel Number 360441C and 360445B, both dated December 1, 1987. Preliminary

		mapping dated January 18, 2016 shows that none of the culverts that make up the Project site are in a mapped SFHA. (See **Appendix A**, Figures.) The Project would not involve financial assistance for construction, rehabilitation, or acquisition of a mobile home, building, or insurable personal property or the purchase of machinery, equipment, fixtures, or furnishings insurable under the National Flood Insurance Program (NFIP). **Source: 7**
STATUTES, EXECUTIVE ORDERS, AND REGULATIONS LISTED AT 24 CFR 58.5		
Clean Air Clean Air Act, as amended, particularly section 176(c) & (d); 40 CFR Parts 6, 51, 93	Yes ☐ No ☒	The Project sites are not included in the most recent listing of nonattainment or maintenance areas for inhalable particulate matter (PM2.5) or the 2008 8-hour ozone standard, as defined by the US Environmental Protection Agency (EPA) Green Book Nonattainment Areas for Criteria Pollutants. The Project would not require an NYS Air Registration, Air Facility Permit, or Federal Clean Air Act Title IV or Title V Permit. The Project activities would not substantively affect air quality. Implementation of standard best management practices (BMP) would control dust and other emissions during construction. Air quality impacts would be short term and localized during construction, so no significant adverse impacts to air quality are anticipated. (See **Appendix A**, Figures) **Source: 8**
Coastal Zone Management Coastal Zone Management Act, sections 307(c) & (d)	Yes ☐ No ☒	The Project sites are not in a coastal zone as defined by the state's Coastal Zone Management or a Local Waterfront

		Revitalization Program. (See **Appendix A**, Figures) **Source: 5**
Contamination and Toxic Substances 24 CFR Part 50.3(i) & 58.5(i)(2)	Yes ☐ No ☒	The Project sites have been previously disturbed by the existing culverts. No hazardous or solid waste storage is evident at any of the culvert sites, and the Project would not expose new populations to hazards or nuisances because no new populations would reside on the Project sites. A search of the NYSDEC Bulk Storage Program Database identified four petroleum bulk storage (PBS) facilities within one mile of the Project sites. None of these facilities are adjacent to any of the Project sites, and none of the Project sites were identified in NYSDEC Bulk Storage Program Database. (See **Appendix A**, Figures) The Project would not involve storage of flammable or explosive materials. No remedial sites were identified within a mile of any of the Project sites in a search of the NYSDEC Remedial Site Database, containing records of the sites being addressed under one of NYSDEC's remedial programs (State Superfund, Brownfield Cleanup, Environmental Restoration and Voluntary Cleanup, the Registry of Inactive Hazardous Waste Disposal Sites, and Institutional and Engineering Controls). (See **Appendix A**, Figures) The Project would not introduce populations that could be subject to soil or groundwater exposure, and the Project sites were not identified in NYSDEC Remedial Site Database. EPA's NEPAssist mapping tool identified two Resource Conservation and Recovery Act (RCRA) sites, three sites with National

		Pollutant Discharge System Permit System (NPDES), permits within 1 mile of the Project area. The Project sites were not identified by NEPAssist. The Project would not result in the exposure of people or sensitive environmental resources to the facilities identified in these databases. HUD regulations at 24 CFR 50.3(i) and 58.5(i)(2) require all property to be free of contamination where a hazard could affect the health and safety of occupants or conflict with the intended use of the property. Section 50.3(i) states that "It is HUD policy that all property proposed for use in HUD programs be free of hazardous materials, contamination, toxic chemicals and gasses, and radioactive substances, where a hazard could affect the health and safety of occupants or conflict with the intended utilization of the property". The National Emission Standards for Hazardous Air Pollutants (NESHAP) regulations under the Clean Air Act specify work practices for asbestos to be followed during demolitions and renovations of all structures, installations, and buildings. The regulations require the owner of the building or the operator to notify the appropriate state agency before any demolition, or before any renovations of buildings that could contain a certain threshold amount of asbestos or asbestos-containing material. The Project would involve the demolition of a part of the roads each culvert passes under and the removal of the existing culvert materials (CMP, HDPE, or concrete), which are not likely to contain asbestos-containing materials. **Source: 9, 10, 11**
Endangered Species	Yes No	The US Fish and Wildlife Service (USFWS) online review process, completed on

Endangered Species Act of 1973, particularly section 7; 50 CFR Part 402	☒ ☐	January 26, 2017, indicated that there is one threatened species potentially associated with the Project sites: the northern long-eared bat (NLEB) (*Myotis septentrionalis*). Several migratory birds of concern that could be affected by the proposed Project also were identified in the online review process. The main impact of concern for bats is the cutting or removal of potential hibernacula or roost trees. The sites are not within 0.25 mile of known or assumed hibernacula for the NLEB, nor are there documented maternity roosts within 150 feet of the Project sites. The sites are not within 5 miles of NLEB hibernacula. Impacts to the NLEB are not anticipated. A letter of detailing the Responsible Entity's No Effect Determination was sent to the USFWS on March 6, 2017. A letter dated March 7, 2017, acknowledged the No Effect Determination and stated no further Endangered Species Act coordination or consultation would be required. On May 19, 2017, GOSR provided the USFWS a notice of determination of that the project may affect the NLEB, but that any resulting incidental take of the NLEB is not prohibited by the final 4(d) rule. The notice stated that if the USFWS does not respond within 30 days of the notice, GOSR may presume that its determination is informed by the best available information and that its project responsibilities under 7(a)(2) with respect to the NLEB are fulfilled through the USFWS January 5, 2016, "Programmatic Biological Opinion (BO) on the Final 4(d) Rule for the Northern Long-Eared Bat and Activities Excepted from Take Prohibitions." To date, the USFWS has not objected to the determination. If the USFWS has objections,

		the environmental review record will be updated and project activities modified in accordance with USFWS recommendations. Additionally, if the project activities do not occur within a year of May 19, 2017, GOSR will update the determination. Based on the small number of anticipated trees to be removal and the distances to known or assumed hibernacula and maternity roosts, the UFSWS is not anticipated to object to the determination. In response to a February 3, 2017, New York Natural Heritage Program (NYNHP) inquiry regarding potential rare or state-listed animals or plants near the Project sites, the NYNHP stated on February 24, 2017, that it has no records of rare or state-listed animals or plants, or significant natural communities at the Project sites or nearby. (See **Appendix B** USFWS and NYNHP Correspondence, and **Appendix A**, Figures) **Source: 12, 13**
Explosive and Flammable Hazards 24 CFR Part 51 Subpart C	Yes ☐ No ☒	The Project would not introduce housing or sensitive public uses at the sites that could be exposed to explosive or flammable hazards. The Project does not constitute a HUD-funded hazardous facility, so 24 CFR part 51 Subpart C does not apply. HUD-assisted projects must be at an Acceptable Separation Distance (ASD) from stationary hazardous operations that store, handle, or process chemicals or petrochemicals of an explosive or flammable nature. These tanks include: • Aboveground storage tanks (AST) that store flammable or explosive gasses (such as propane) within a 1,000-foot radius of the Project site; • ASTs exceeding 100 gallons that store flammable or explosive liquids

		within a 1,000-foot radius of the Project site; or • ASTs that exceed 20,000 gallons and are within 1 mile of the site. There are no known ASTs that store flammable or explosive gasses or liquids within 1,000 feet of the Project sites, and no known ASTs that exceed 20,000 gallons are identified in the NYSDEC Bulk Storage Program Database within 1 mile of the Project sites. **Source: 9**
Farmlands Protection Farmland Protection Policy Act of 1981, particularly sections 1504(b) and 1541; 7 CFR Part 658	Yes ☐ No ☒	The culverts at McKay Road 1, Fort Hunter Road, Hartley Road, Bullshead Road, Pattersonville Road, Shellstone Road McKinney Road 4A and 4B, and Strevy Lane are situated on Soils of Statewide Importance. The culverts at McKay Road 2 and Langley Road are on soils that are considered Prime Farmland if drained. All of the culverts except those on McKay Road also are in a New York state agricultural district. The areas affected by the proposed culvert replacements are not in agricultural use and would not convert existing farmland to non-agricultural uses. There would be no change in land use. None of the culverts would disturb three acres or more of these protected soils, falling under the NRCS small acreage exemption of 3 acres or less. According to Part 523.11 E of the Farmland Protection Policy Act (FPPA) Manual, an AD 1006 is not required. (See **Appendix A**, Figures) **Source: 14**
Floodplain Management Executive Order 11988, particularly section 2(a); 24 CFR Part 55	Yes ☐ No ☒	The Project sites are not in a mapped Special Flood Hazard Area (SFHA) Zone, as shown on the Federal Emergency Management Agency (FEMA) Flood Insurance Rate Map (FIRM) Community

		Panel Number 360441C and 360445B, both dated December 1, 1987. Preliminary mapping dated January 18, 2016 also shows that none of the culverts that make up the Project site are in a mapped SFHA. (See **Appendix A**, Figures.) **Source: 7**
Historic Preservation National Historic Preservation Act of 1966, particularly sections 106 and 110; 36 CFR Part 800; Tribal notification for new ground disturbance.	Yes ☐ No ☒	Consultation with the New York State Historic Preservation Office (SHPO) and the Division for Historic Preservation (DHP) in the Office of Parks, Recreation and Historic Preservation (OPRHP) in accordance with Section 106 of the National Historic Preservation Act of 1966 was initiated on April 26, 2017. On May 8, 2017, the SHPO provided its finding that no historic properties would be affected by the Project. (See **Appendix C**, SHPO Correspondence.) The Saint Regis Mohawk Tribe and the Mohawk Nation Council of Chiefs of Haudenosaunee Six Nations Confederacy were identified as possible consulting parties. Each was sent a letter on April 26, 2017, with the site descriptions, photographs, site plans, and maps. No responses were received as of the time of publication of this review. (See **Appendix D**, Tribal Correspondence.)
Noise Abatement and Control Noise Control Act of 1972, as amended by the Quiet Communities Act of 1978; 24 CFR Part 51 Subpart B	Yes ☐ No ☒	The Project is not a noise sensitive use and the policies of 24 CFR 51.101(a)(3) do not apply to any action or emergency assistance under disaster assistance provisions or appropriations that are provided to save lives and protect public health and safety. The Project involves the replacement of culverts and would not introduce any new or rehabilitate any existing noise-sensitive uses.

Sole Source Aquifers Safe Drinking Water Act of 1974, as amended, particularly section 1424(e); 40 CFR Part 149	Yes ☐ No ☒	The Project area is not in the bounds of a Sole Source Aquifer Designated Area. (See **Appendix A**, Figures) **Source: 11, 14**
Wetlands Protection Executive Order 11990, particularly sections 2 and 5	Yes ☒ No ☐	The culverts at Fort Hunter Road, Bullshead Road, Pattersonville Road, Shellstone Road, and Strevy Lane are in riverine wetlands, as identified National Wetlands Inventory (NWI). The culvert at Fort Hunter Road is within 300 feet of freshwater regulatory wetlands identified by NYSDEC (See **Appendix A**, Figures) The wetlands that would be temporarily disturbed by construction of the Project have been previously disturbed by construction of the roads and the existing culverts under the roads. The flow of the waterways and the associated wetlands are already modified by the existing culverts at each location. Each culvert replacement would include stream reshaping and placement of rip-rap in the stream channel at each end of the culvert. This material would continue to allow infiltration and flow of the waterway. The majority of additional disturbance to the wetlands from the Project would be temporary, and the total area of wetland disturbance for each, including the area of installed rip-rap, would be below the 1-acre threshold for recommended appropriate and practicable compensatory mitigation for unavoidable adverse impacts (see **Appendix E**, Wetlands). The streams associated with each culvert are classified by NYSDEC as Class C (waters supporting fisheries and suitable for non-contact activities). A joint application for disturbance of a stream was submitted to the NYSDEC and the US Army Corps of

		Engineers. The Project will adhere to all applicable conditions in the permit. A dewatering plan for each culvert was designed to maintain the clarity of the water downstream of the work area at the same level as the clarity of the water upstream of the work area (see **Appendix E**, Wetlands). Precautions would be taken during construction to preclude contamination of the waterway by suspended solids, sediments, turbid waters or any other environmentally deleterious materials. Excavated soil will be properly retained and covered to avoid runoff. The work area would be isolated from flowing water, and water retained upstream of the work area would be filtered before being returned to the waterway. All unused excavated material and construction debris will be removed to a minimum of 100 feet from each waterway upon completion of construction of each culvert. The temporary disturbance to the streams is not expected to have any significant negative effect on the adjacent riparian buffer wetland areas, and the Project would not alter the survival and quality of the wetlands. In accordance with 24 CFR Part 55, Floodplain Management and Protection of Wetlands, five-step wetland analysis was done for the Project to identify potential impacts to the wetlands and methods to minimize the potential adverse impacts in the wetlands associated with the culverts at Fort Hunter Road, Bullshead Road, Pattersonville Road, Shellstone Road, and Strevy Lane. (See **Appendix E**, Wetlands.) **Source: 16, 17, 18**
Wild and Scenic Rivers	Yes No	There are no state or federally designated wild and scenic rivers at or near the Project. Schoharie Creek is the nearest designated

Wild and Scenic Rivers Act of 1968, particularly section 7(b) and (c)	☐ ☒	wild and scenic river, and it is approximately 0.5 mile from the McKinney Road 4A and 4B sites. (See **Appendix A**, Figures) **Source: 19, 20, 21**
ENVIRONMENTAL JUSTICE		
Environmental Justice Executive Order 12898	Yes No ☐ ☒	Because this culvert replacement Project has no potential adverse impacts, there are no disproportionate adverse impacts anticipated. No adverse impacts are anticipated on the surrounding community because the Project would follow local ordinances. The Project sites are not in or near areas with environmental justice populations, as defined by NYSDEC based on data from the 2000 U.S. Census. (See **Appendix A**, Figures) **Source: 22**

List of Sources, Agencies and Persons Consulted [40 CFR 1508.9(b)]:

1. New York State. 2013. State of New York Action Plan for Community Development Block Grant Program Disaster Recovery (Action Plan, issued April 25, 2013, amended July 3, 2012) New York State. 2013.

2. New York State. 2014. Montgomery County NY Rising Countywide Resiliency Plan. July 2014.

3. Federal Aviation Administration. Report to Congress – National Plan of Integrated Airport Systems. Internet Website: http://www.faa.gov/airports/planning_capacity/npias/reports/media/ npias-2015-2019-report-appendix-b-part-4.pdf.

4. Federal Aviation Administration. Report to Congress – National Plan of Integrated Airport Systems. Internet Website: http://www.faa.gov/airports/planning_capacity/npias/reports/media/npias-2015-2019-report-narrative.pdf.

5. New York State Department of State, Office of Communities and Waterfronts – Coastal Boundary Map. Internet Website: http://appext20.dos.ny.gov/coastal_map_public/map.aspx.

6. US Fish and Wildlife Service. 2015. Coastal Barrier Resources Mapper – Beta. Internet Website: http://www.fws.gov/cbra/Maps/Mapper.html.

7. United States Federal Emergency Management Agency. Current FEMA issued Flood Maps. Internet Website: https://msc.fema.gov/portal.

8. United States Environmental Protection Agency. Green Book Nonattainment Areas. Internet Website: http://www.epa.gov/oaqps001/greenbk/ancl.html.

9. New York State Department of Environmental Conservation Bulk Storage Database Search. Internet Website: http://www.dec.ny.gov/cfmx/extapps/derexternal/index.cfm?pageid=4.

10. New York State Department of Environmental Conservation Environmental Site Remediation Database Search. Internet Website: http://www.dec.ny.gov/cfmx/extapps/derexternal/index.cfm?pageid=3.

11. United States Environmental Protection Agency. 2015. NEPAssist Internet Mapping Tool. http://www.epa.gov/nepa/nepassist.

12. US Fish and Wildlife Service. 2016. Northern Long-eared Bat Hibernacula and Maternity Roost Tree Location Information. Internet Website: https://www.fws.gov/northeast/nyfo/es/MYSE%20bat%20sites_2016.xlsx.

13. US Fish and Wildlife Service. 2016. Endangered Species Act Official Species List. November 16, 2016.

14. United States Department of Agriculture. Natural Resources Conservation Service. Internet Website: http://websoilsurvey.sc.egov.usda.gov/App/WebSoilSurvey.aspx.

15. U.S. Environmental Protection Agency Region 2. 2007. Sole Source Aquifers for NY and NJ. September 2007. Internet Website: http://www.epa.gov/region02/gis/data/downloads/r2sole_source_aquifer.zip.

16. U.S. Fish and Wildlife Service. 2014. National Wetlands Inventory, New York. Internet Website: http://www.fws.gov/wetlands/Data/State-Downloads.html.

17. New York State Department of Environmental Conservation. Regulatory Freshwater Wetlands – New York State – 2002 GIS data. Internet Website: http://cugir.mannlib.cornell.edu/datatheme.jsp?id=111.

18. New York State Department of Environmental Conservation. Tidal Wetlands – NYC and Long Island – 1974. Internet Website: https://gis.ny.gov/gisdata/inventories/details.cfm?DSID=1139

19. National Wild and Scenic Rivers System. Internet Website: http://www.rivers.gov/new-york.php.

20. New York State Department of Environmental Conservation. Wild Scenic and Recreational Rivers. Internet Website: http://www.dec.ny.gov/permits/32739.html.

21. USDA Forest Service – Automated Lands Program. 2015. Wild and Scenic Rivers GIS data. November 30, 2015.

22. New York State Department of Environmental Conservation. Potential Environmental Justice Areas in the City of Schenectady, Schenectady County, New York. Internet Website: http://www.dec.ny.gov/docs/permits_ej_operations_pdf/ulsterej.pdf.

List of Appendices

Appendix A Figures

Appendix B USFWS and NYNHP Correspondence

Appendix C SHPO Correspondence

Appendix D Tribal Correspondence

Appendix E Wetlands

List of Permits Obtained or Required:

NYSDEC and USACE permit to undertake activities affecting streams, waterways, water bodies, wetlands, coastal areas and sources of water withdrawal. (See **Appendix E**, Wetlands.)

- NYSDEC Article 15 – Protection of Water Permit
- NYSDEC Section 401 Water Quality Certification
- NYSDEC Article 24 – Freshwater Wetland Permit
- USACE Section 404 of the Clean Water Act Permit
- SPDES General Permit

List of Approvals Obtained or Required:

SEQRA Type II determination per Section 617.5(c)(7).

Preparer Signature: Genevieve Kaiser Date: May 27, 2017

Name/Title/Organization: Genevieve Kaiser, Senior Environmental Planner, Tetra Tech, Inc.

Certifying Officer Signature: Lori A Shirley Date: May 27, 2017

Name/Title: Lori A. Shirley, Certifying Officer, Governor's Office of Storm Recovery

This original, signed document and related supporting material must be retained on file by the Responsible Entity in an Environmental Review Record (ERR) for the activity/project (ref: 24 CFR Part 58.38) and in accordance with recordkeeping requirements for the HUD program(s).

APPENDIX A

FIGURES

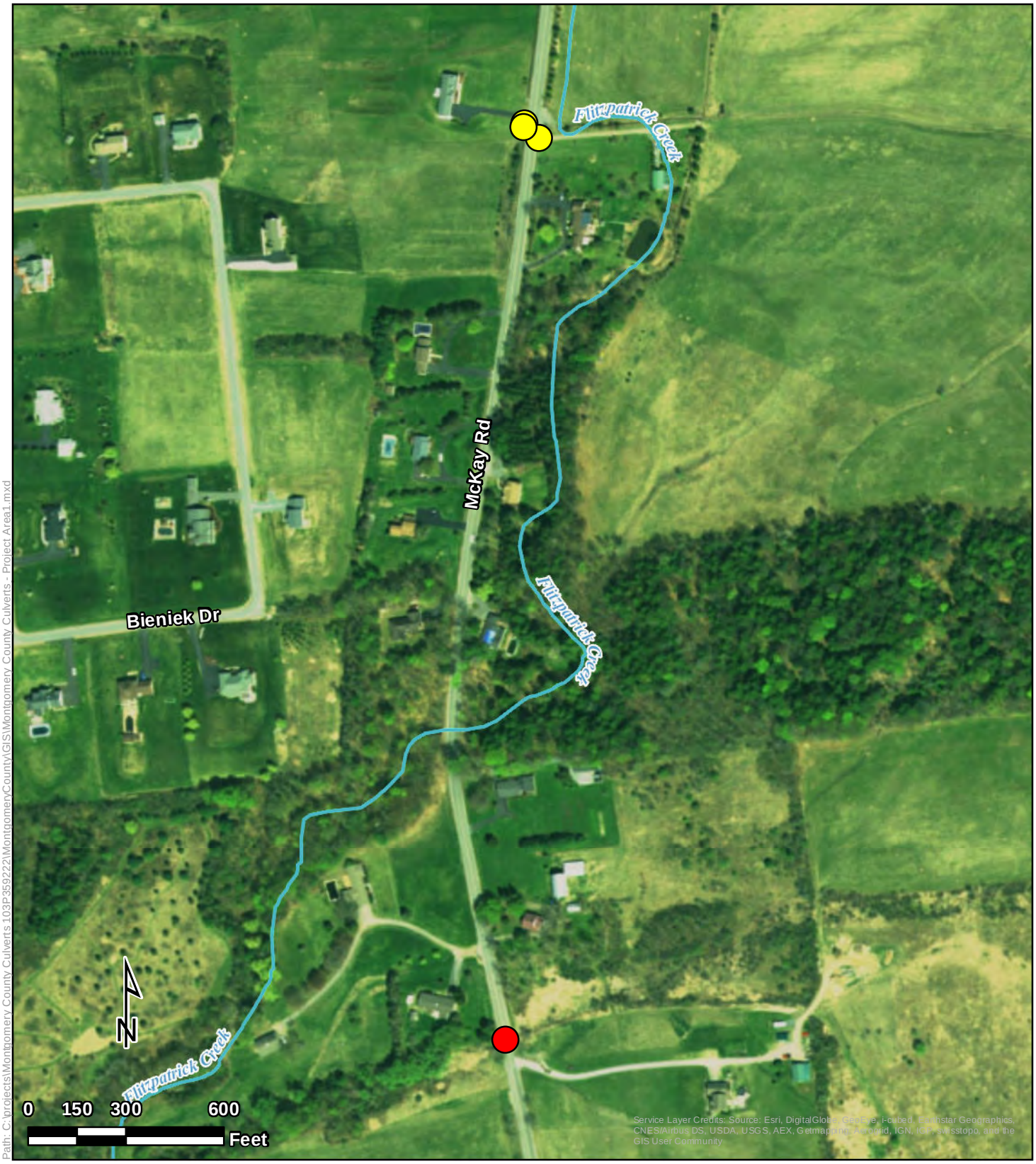

Path: C:\projects\Montgomery County Culverts 103P359222\MontgomeryCountyVGIS\Montgomery County Culverts - Project Area1.mxd

Project Area 1

Montgomery County Culverts
McKay Road
Montgomery County, New York

Legend

Culvert Locations

- McKay Road 1
- McKay Road 2

Tetra Tech, Inc

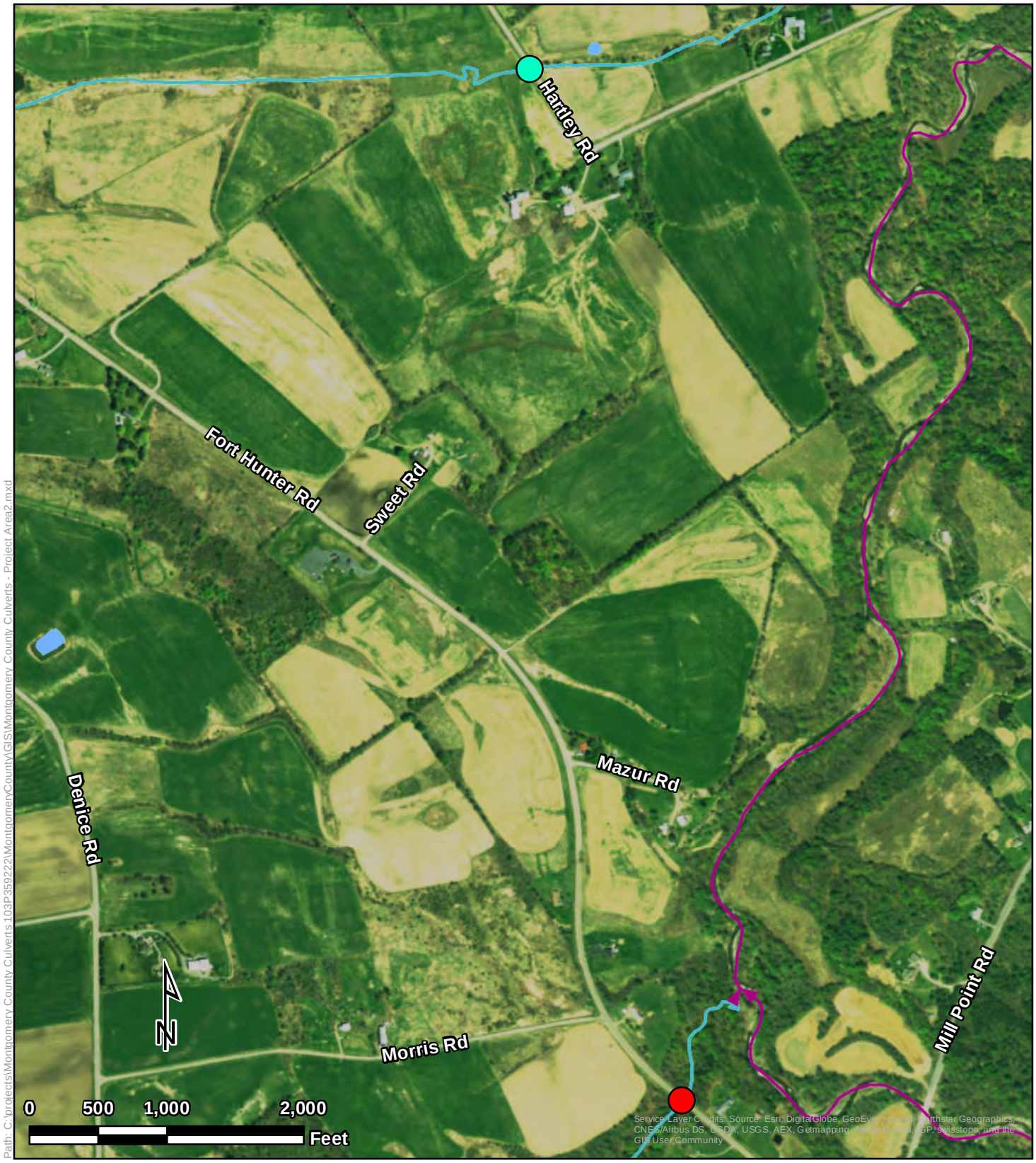

Path: C:\projects\Montgomery County Culverts 103P359222\MontgomeryCountyVGIS\Montgomery County Culverts - Project Area2.mxd

Project Area 2

Montgomery County Culverts
Fort Hunter Road, Hartley Road
Montgomery County, New York

Legend

Culvert Locations

- Fort Hunter Road
- Hartley Road

Tetra Tech, Inc

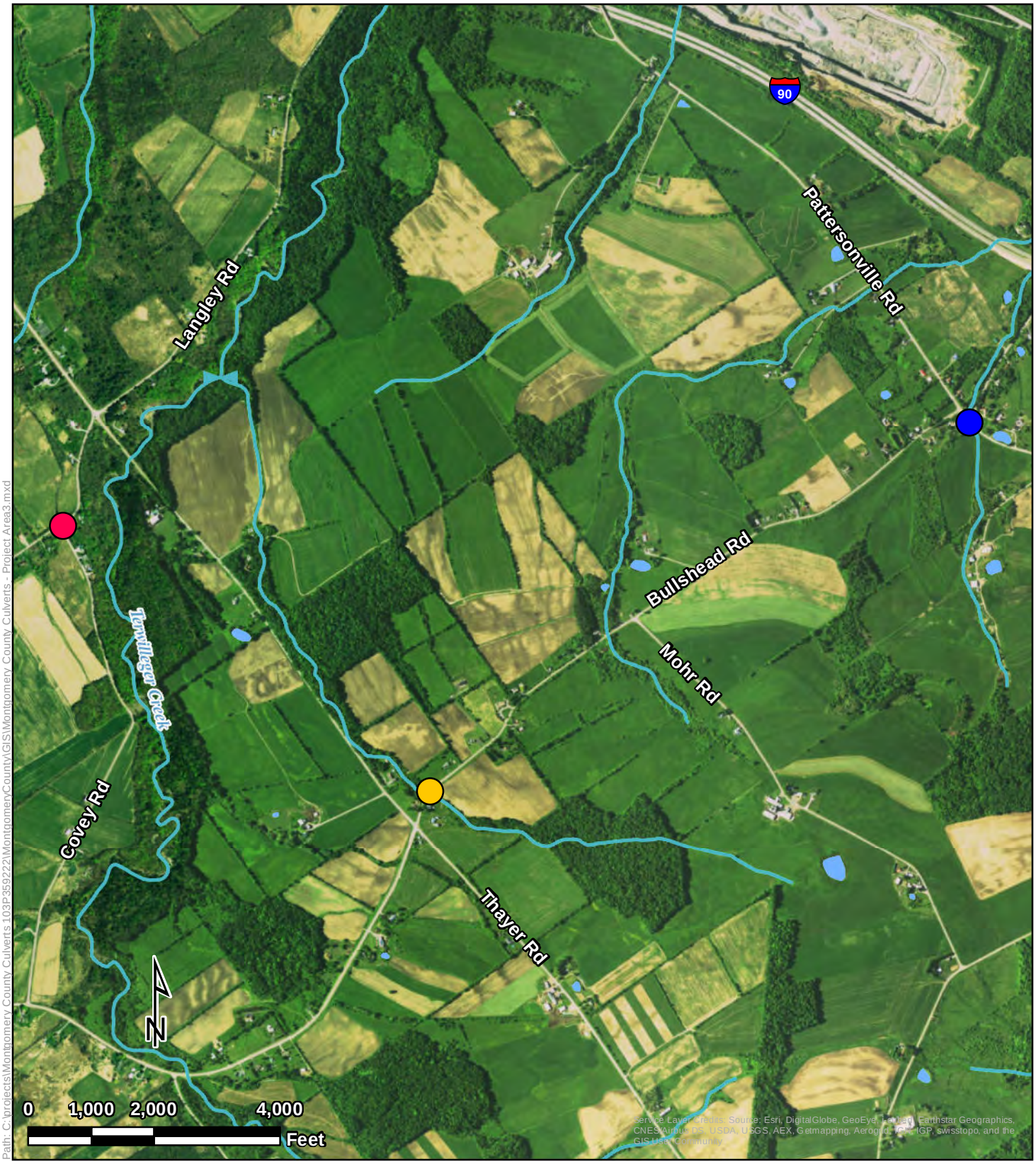

Path: C:\projects\Montgomery County Culverts 103P359222\MontgomeryCountyVGIS\Montgomery County Culverts - Project Area3.mxd

Legend

Culvert Locations

- Bullshead Road
- Langley Road
- Pattersonville Road

Project Area 3

Montgomery County Culverts
Bullshead Road, Langley Road, Pattersonville Road
Montgomery County, New York

Tetra Tech, Inc

Path: C:\projects\Montgomery County Culverts 103P359222\MontgomeryCountyVGIS\Montgomery County Culverts - Project Area4.mxd

Project Area 4

Montgomery County Culverts
Shellstone Road
Montgomery County, New York

Legend

Culvert Locations

Shellstone Road

Tetra Tech, Inc

Path: C:\projects\Montgomery County Culverts 103P359222\MontgomeryCounty\GIS\Montgomery County Culverts - Project Area5.mxd

Project Area 5

Montgomery County Culverts
McKinney Road
Montgomery County, New York

Legend

Culvert Locations

- McKinney Road 4A
- McKinney Road 4B

Tetra Tech, Inc

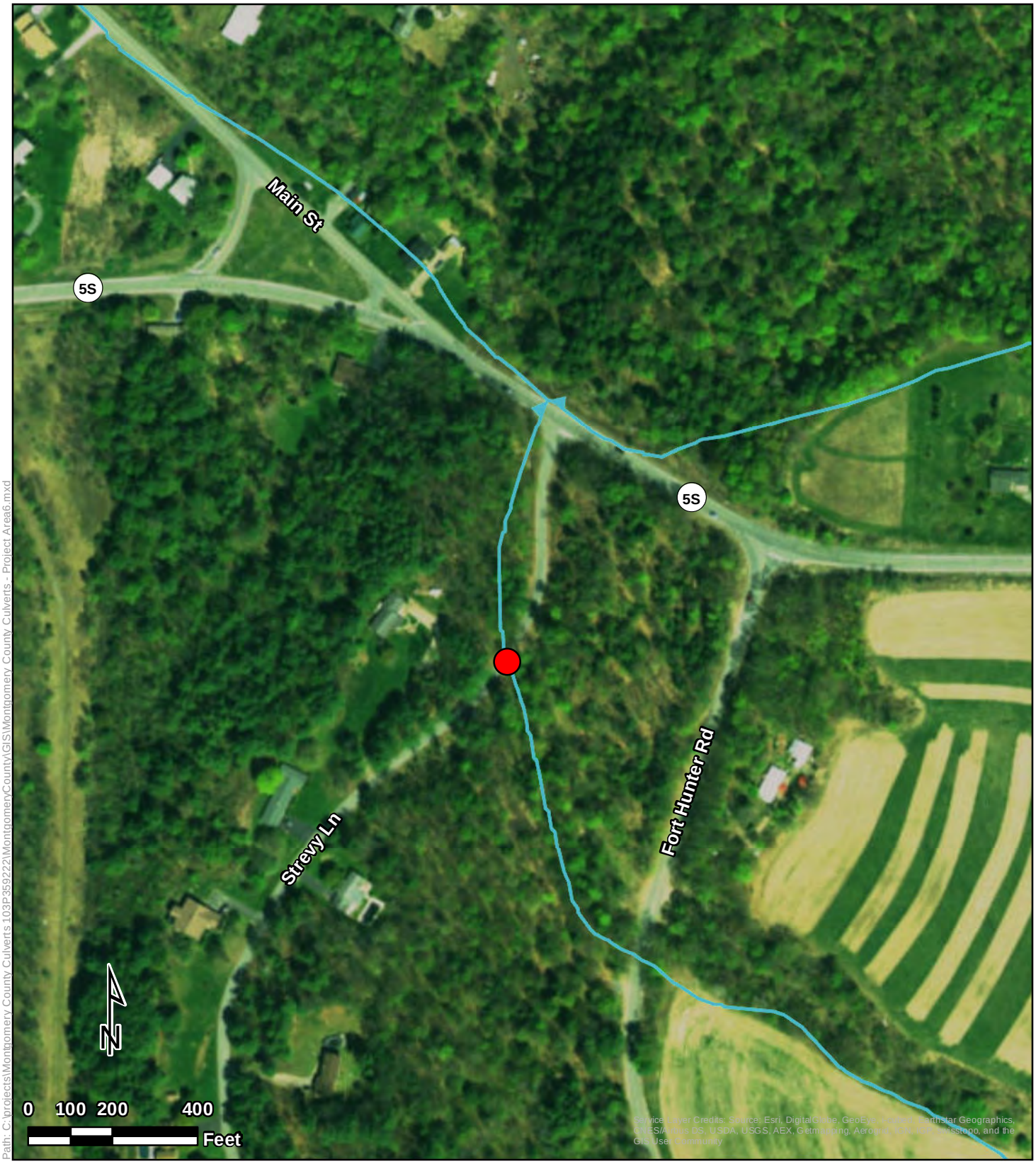

Path: C:\projects\Montgomery County Culverts 103P359222\MontgomeryCountyVGIS\Montgomery County Culverts - Project Area6.mxd

Project Area 6

Montgomery County Culverts
Strevy Lane
Montgomery County, New York

Legend

Culvert Locations

Strevy Lane

Tetra Tech, Inc

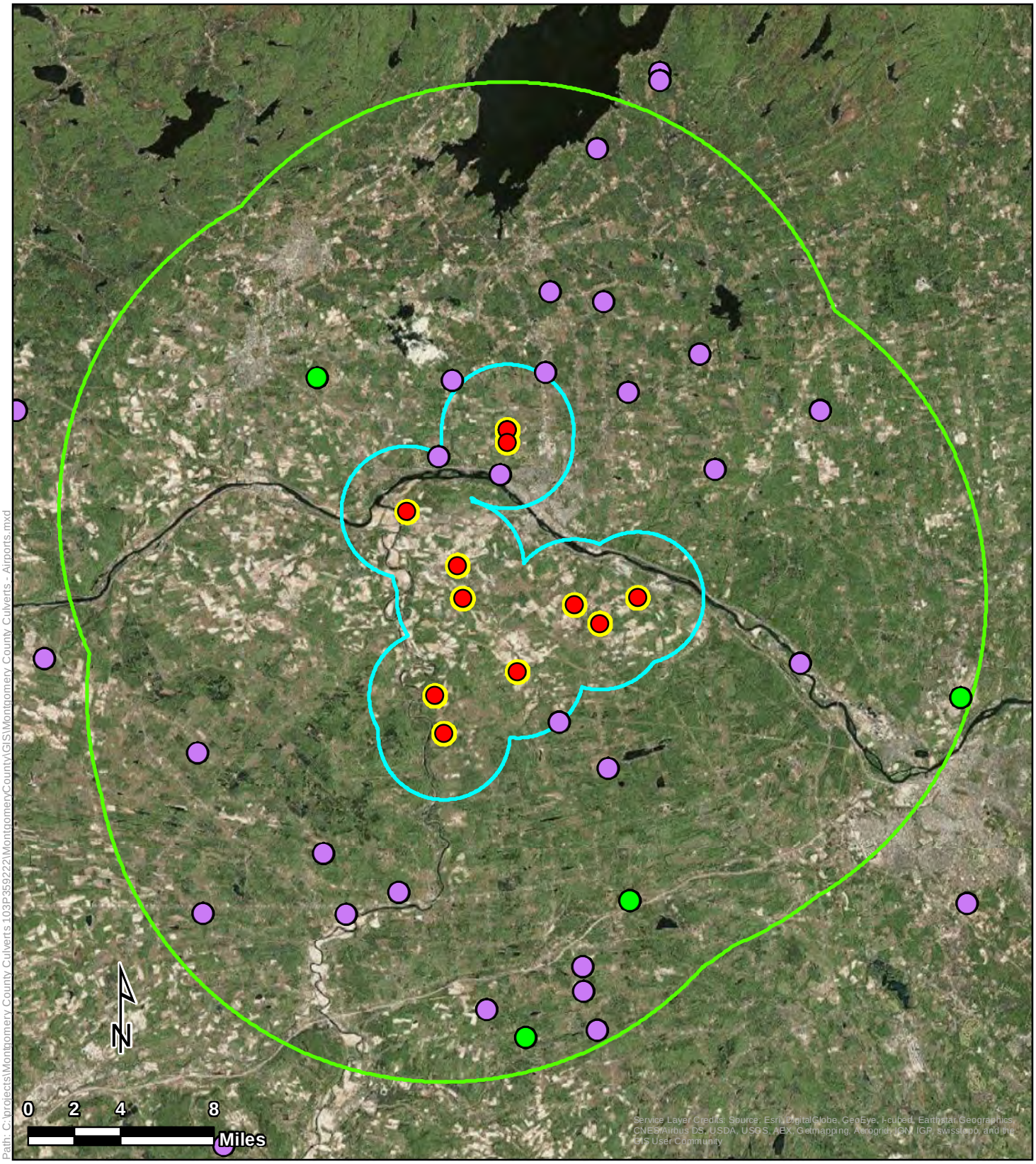

Path: C:\projects\Montgomery County Culverts 103P359222\MontgomeryCountyVGIS\Montgomery County Culverts - Airports.mxd

Legend

Culvert Locations

Airports

Public Use

Private Use

2,500-Foot Project Site Buffer

15,000-Foot Project Site Buffer

15-Mile Project Site Buffer

Airports

Montgomery County Culverts
Montgomery County, New York

Tetra Tech, Inc

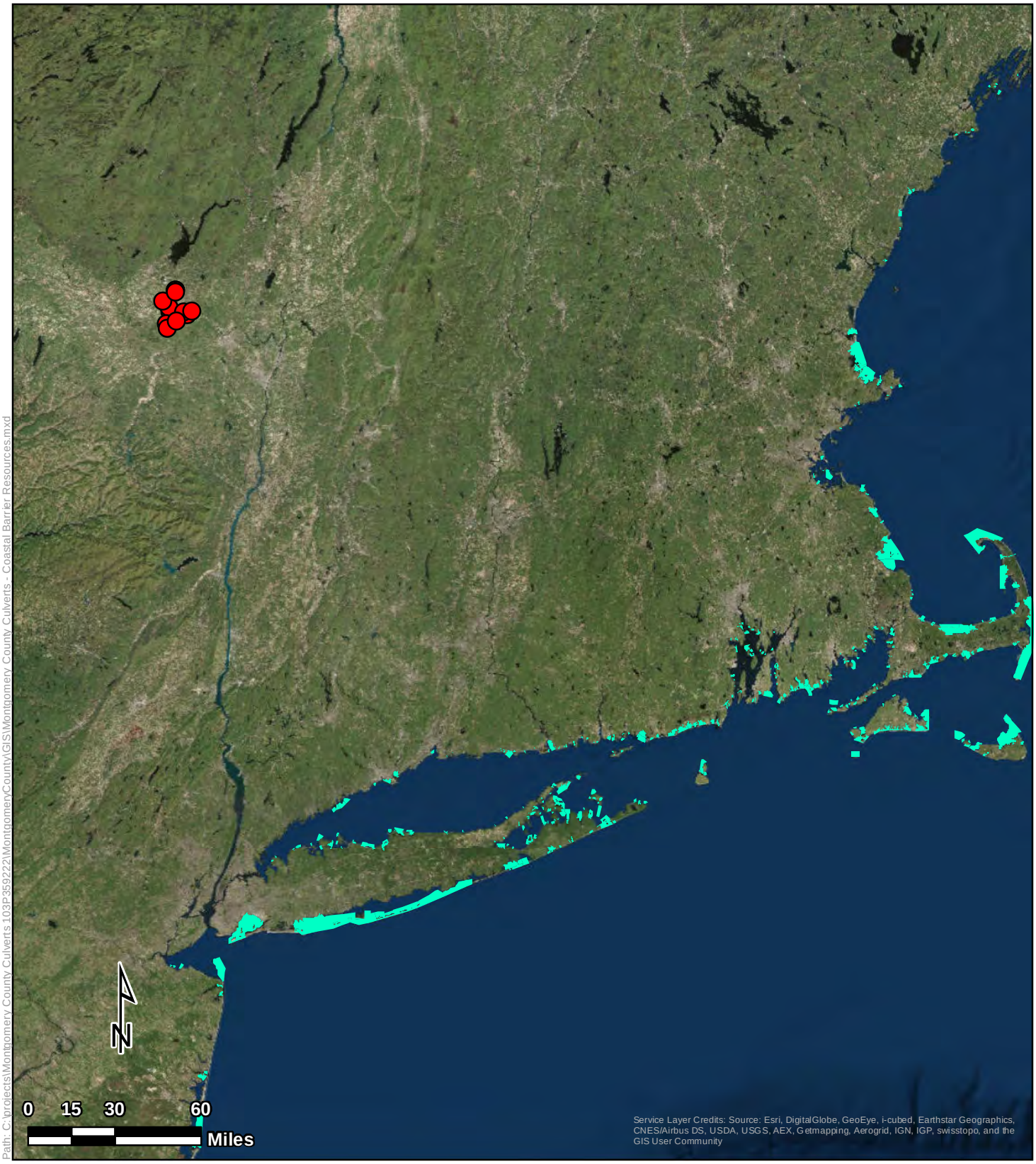

Path: C:\projects\Montgomery County Culverts 103P359222\MontgomeryCountyVGIS\Montgomery County Culverts - Coastal Barrier Resources.mxd

Coastal Barrier Resources

Montgomery County Culverts
Montgomery County, New York

Legend

- Culvert Locations
- CBRS Polygons

Tetra Tech, Inc

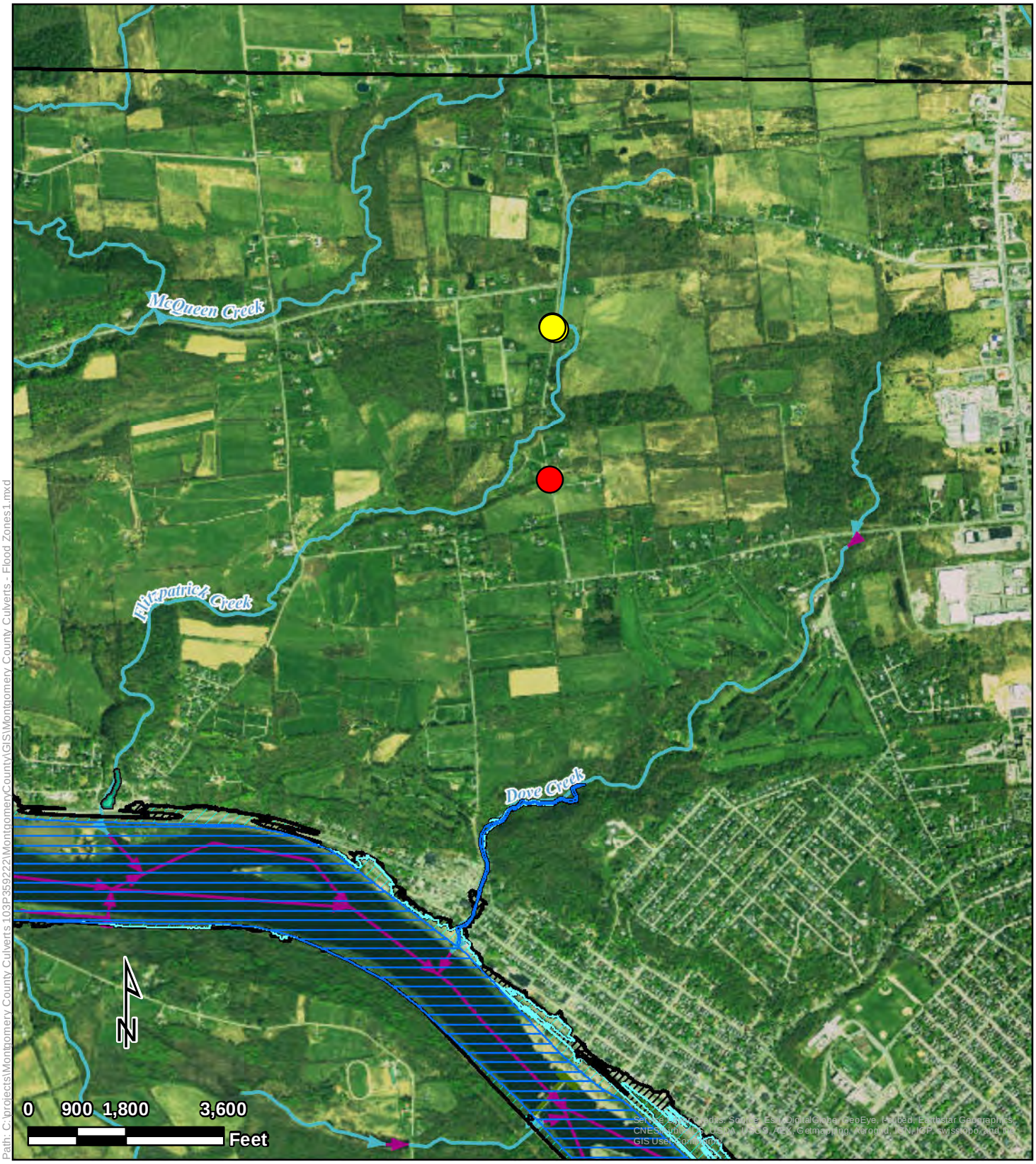

Path: C:\projects\Montgomery County Culverts 103P359222\Montgomery County\GIS\Montgomery County Culverts - Flood Zones1.mxd

Legend

Culvert Locations

- McKay Road 1
- McKay Road 2

Flood Zones (Preliminary)

- Zone A- within the 1% annual chance flood
- Zone AE- Floodway within the 1% annual chance flood
- Zone AE- within the 1% annual chance flood
- Zone X-within the 0.2% annual chance of flood
- Zone X- protected by levee
- Zone X- area of minimal flood hazard

Flood Zones 1

Montgomery County Culverts
McKay Road
Montgomery County, New York

Tetra Tech, Inc

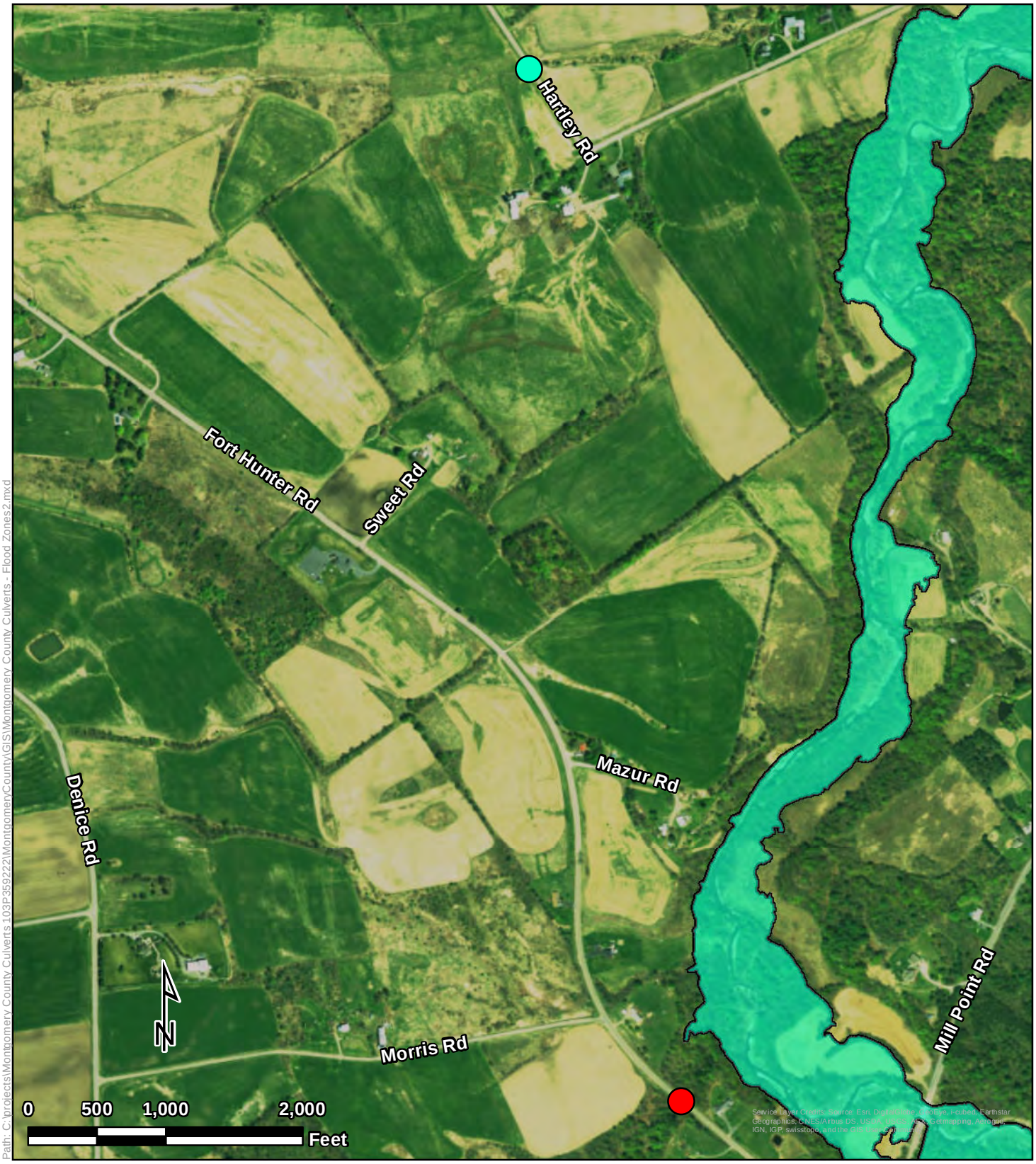

Path: C:\projects\Montgomery County Culverts 103P359222\MontgomeryCountyVGIS\Montgomery County Culverts - Flood Zones2.mxd

Legend

Culvert Locations

- Fort Hunter Road
- Hartley Road

Flood Zones (Preliminary)

- Zone A- within the 1% annual chance flood
- Zone AE- Floodway within the 1% annual chance flood
- Zone AE- within the 1% annual chance flood
- Zone X-within the 0.2% annual chance of flood
- Zone X- protected by levee
- Zone X- area of minimal flood hazard

Flood Zones 2

Montgomery County Culverts
Fort Hunter Road, Hartley Road
Montgomery County, New York

Tetra Tech, Inc

Path: C:\projects\Montgomery County Culverts 103P359222\MontgomeryCounty\GIS\Montgomery County Culverts - Flood Zones3.mxd

Legend

Culvert Locations

- Bullshead Road
- Langley Road
- Pattersonville Road

Flood Zones (Preliminary)

- Zone A- within the 1% annual chance flood
- Zone AE- Floodway within the 1% annual chance flood
- Zone AE- within the 1% annual chance flood
- Zone X-within the 0.2% annual chance of flood
- Zone X- protected by levee
- Zone X- area of minimal flood hazard

Flood Zones 3

Montgomery County Culverts
Bullshead Road,
Langley Road, Pattersonville Road
Montgomery County, New York

Tetra Tech, Inc

Path: C:\projects\Montgomery County Culverts 103P359222\MontgomeryCounty\GIS\Montgomery County Culverts - Flood Zones4.mxd

Legend

Culvert Locations

- Shellstone Road

Flood Zones (Preliminary)

- Zone A- within the 1% annual chance flood
- Zone AE- Floodway within the 1% annual chance flood
- Zone AE- within the 1% annual chance flood
- Zone X-within the 0.2% annual chance of flood
- Zone X- protected by levee
- Zone X- area of minimal flood hazard

Flood Zones 4

Montgomery County Culverts
Shellstone Road
Montgomery County, New York

Tetra Tech, Inc

Path: C:\projects\Montgomery County Culverts 103P359222\MontgomeryCountyVGIS\Montgomery County Culverts - Flood Zones5.mxd

Legend

Culvert Locations

- McKinney Road 4A
- McKinney Road 4B

Flood Zones (Preliminary)

- Zone A- within the 1% annual chance flood
- Zone AE- Floodway within the 1% annual chance flood
- Zone AE- within the 1% annual chance flood
- Zone X-within the 0.2% annual chance of flood
- Zone X- protected by levee
- Zone X- area of minimal flood hazard

Flood Zones 5

Montgomery County Culverts
McKinney Road
Montgomery County, New York

Tetra Tech, Inc

Path: C:\projects\Montgomery County Culverts 103P359222\MontgomeryCountyVGIS\Montgomery County Culverts - Flood Zones6.mxd

Legend

Culvert Locations

- Strevy Lane

Flood Zones (Preliminary)

- Zone A- within the 1% annual chance flood
- Zone AE- Floodway within the 1% annual chance flood
- Zone AE- within the 1% annual chance flood
- Zone X-within the 0.2% annual chance of flood
- Zone X- protected by levee
- Zone X- area of minimal flood hazard

Flood Zones 6

Montgomery County Culverts
Strevy Lane
Montgomery County, New York

Tetra Tech, Inc

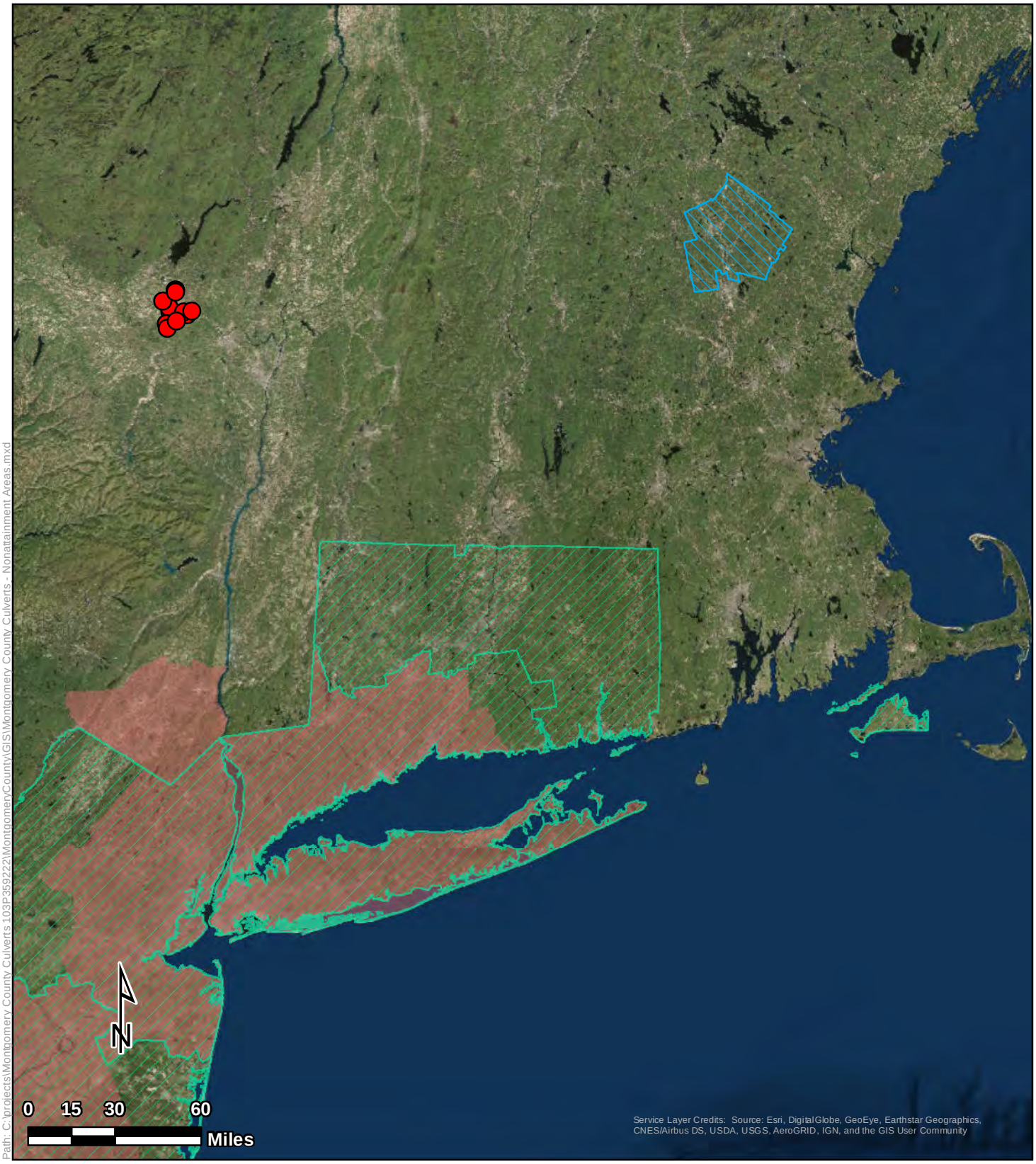

Path: C:\projects\Montgomery County Culverts 103P359222\MontgomeryCounty\GIS\Montgomery County Culverts - Nonattainment Areas.mxd

Legend

- Culvert Locations
- Pb NAA 2008
- SO2 2010 Standard NAA
- Ozone 8hr 2008 Standard NAA
- PM 2.5 2006 Standard NAA

Nonattainment Areas

Montgomery County Culverts
Montgomery County, New York

Tetra Tech, Inc

Welcome to the NYS Coastal Boundary Map

Help

Search

Address:

Enter Address Here

Find Address

Please note that the address marker is automatically placed along the street while certain activities may take place along the waterward property boundary. Please make sure to click and drag the marker to the exact location of the proposed activity for an accurate assessment of whether or not the activity would be located within any DOS Special Management Areas.

Layers

- [x] Landward Coastal Boundary
- [x] Scenic Areas
- [x] Local Waterfront Revitalization Areas
- [x] Local Waterfront Revitalization Program Communities
- [x] Significant Coastal Fish and Wildlife Habitats
- [x] DOS Identified Canals
- [x] Long Island Sound CMP (excludes LWRP communities)
- [ ] Federally Owned Lands
- [ ] Native American Lands

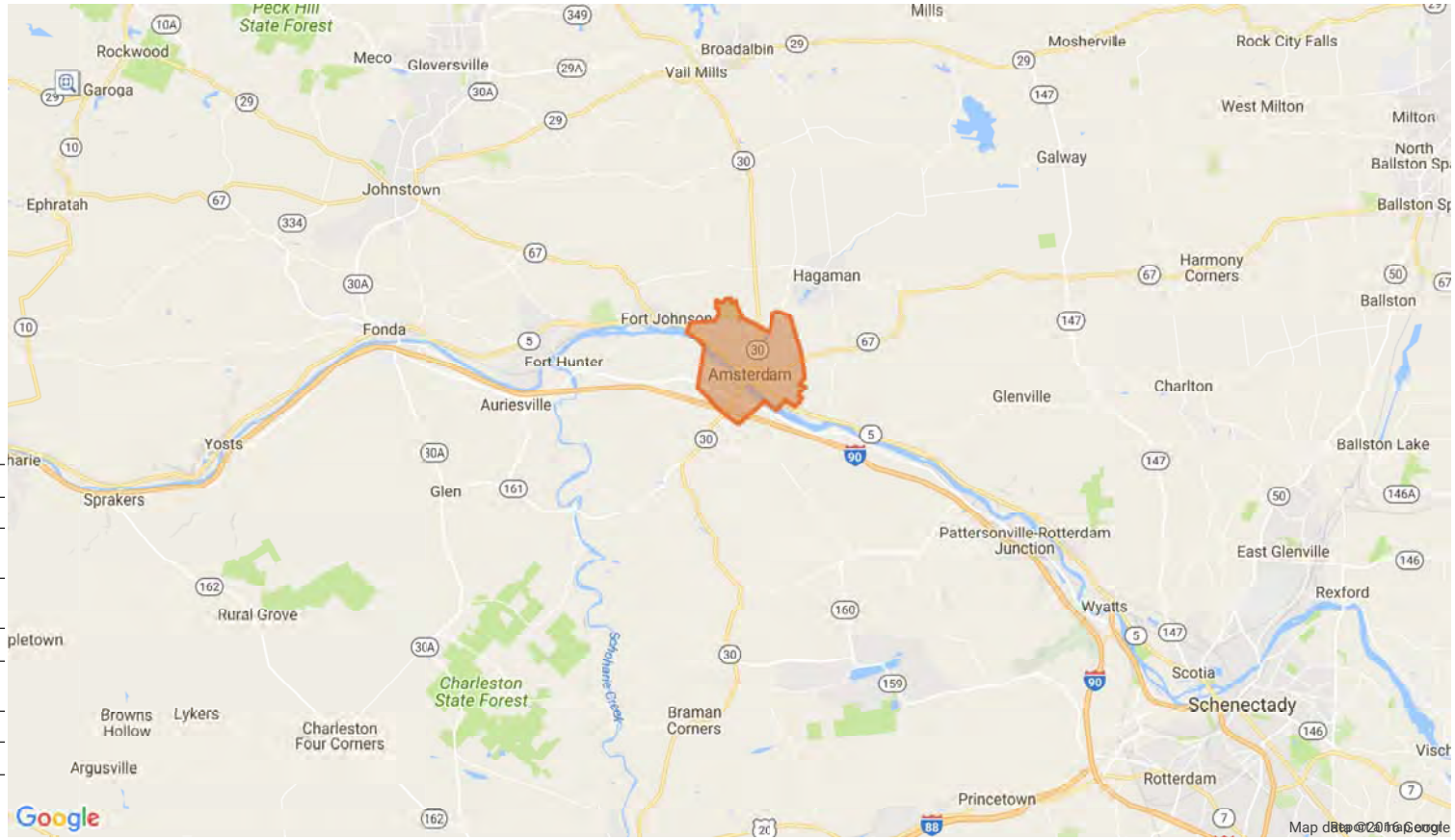

Latitude: 42.803 Longitude: -75.399

The New York State Department of State makes every effort to post accurate and reliable information on this website. The Department of State does not guarantee or warrant that the information on this web site is complete, accurate or current. The information on this website is intended solely for the purpose of electronically providing the public with general coastal consistency-related information and convenient access to data resources. The Department of State neither assumes responsibility for the use or application of any material posted on this website nor responsibility for any error, omission or other discrepancy between the electronic and printed versions of documents.

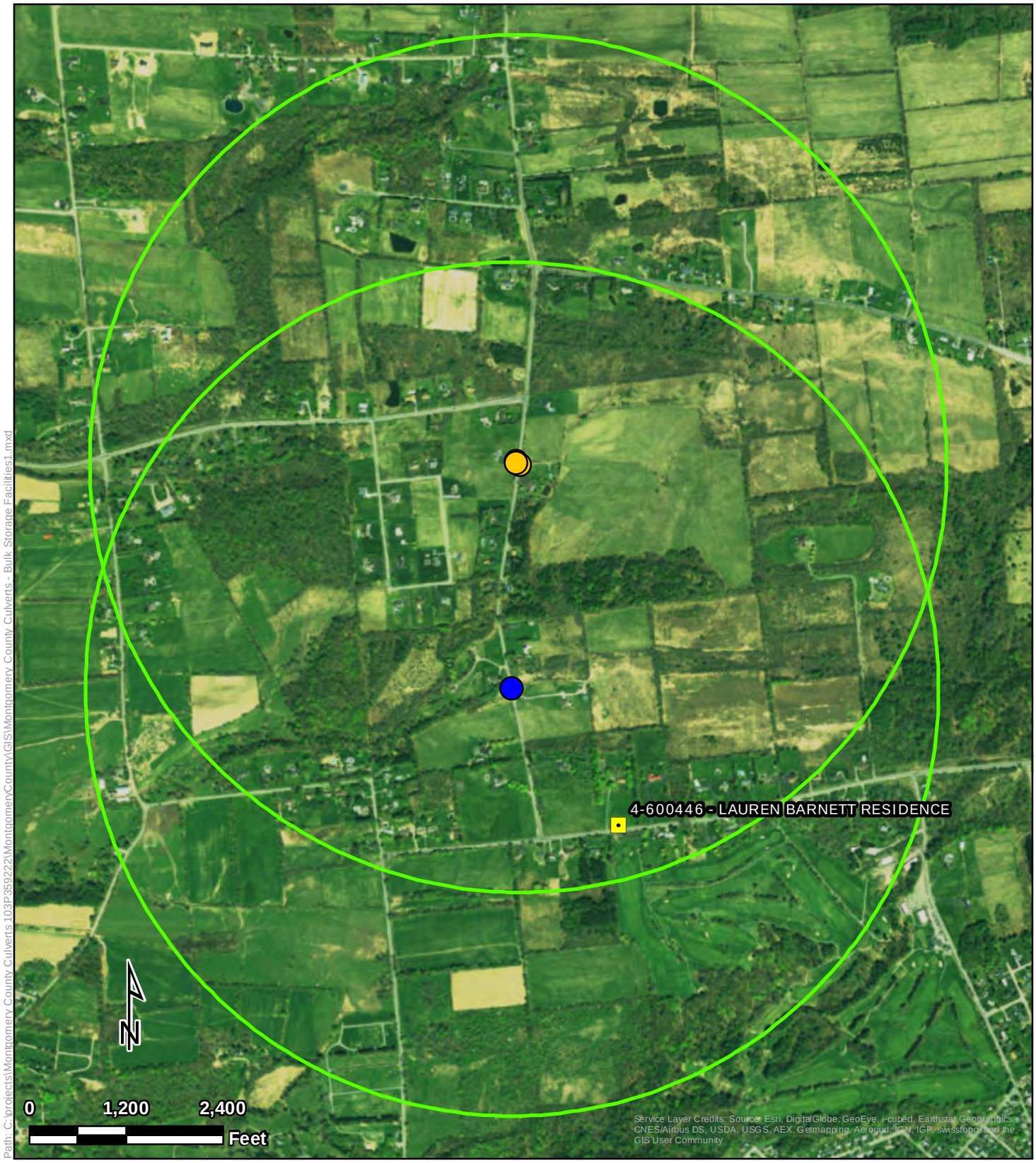

Path: C:\projects\Montgomery County Culverts 103P359222\MontgomeryCountyVGIS\Montgomery County Culverts - Bulk Storage Facilities1.mxd

Bulk Storage Facilities 1

Montgomery County Culverts
McKay Road
Montgomery County, New York

Legend

Culvert Locations

- McKay Road 1
- McKay Road 2

Bulk Storage Facilities

- Chemical Bulk Storage
- Major Oil Storage Facility
- Petroleum Bulk Storage
- One Mile Project Site Buffer

Tetra Tech, Inc

Path: C:\projects\Montgomery County Culverts 103P359222\MontgomeryCountyVGIS\Montgomery County Culverts - Bulk Storage Facilities3a.mxd

Bulk Storage Facilities 2

Montgomery County Culverts
Fort Hunter Road, Hartley Road
Montgomery County, New York

Legend

Culvert Locations

- Fort Hunter Road
- Hartley Road

Bulk Storage Facilities

- Chemical Bulk Storage
- Major Oil Storage Facility
- Petroleum Bulk Storage
- One Mile Project Site Buffer

Tetra Tech, Inc

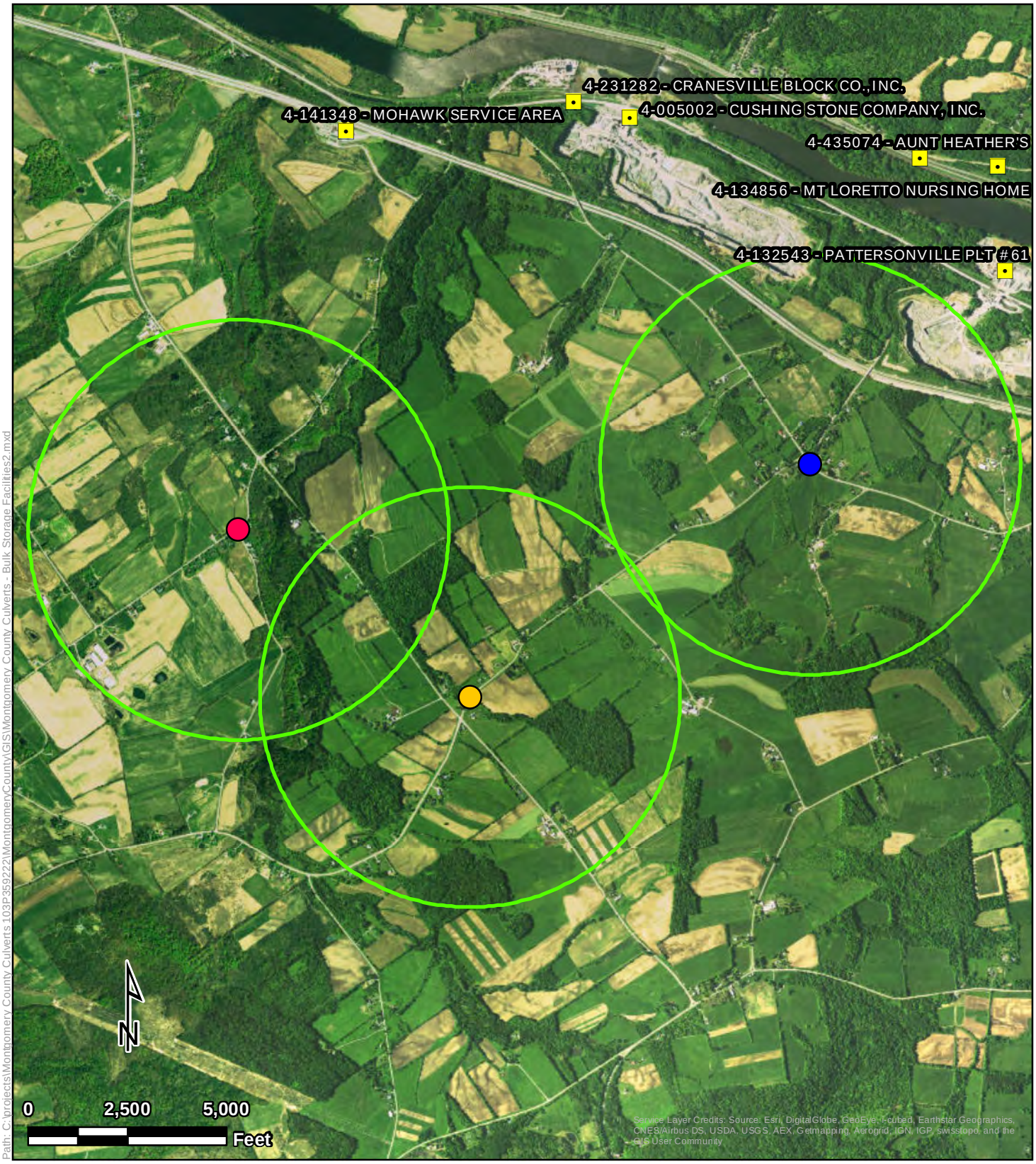

Path: C:\projects\Montgomery County Culverts 103P359222\Montgomery\County\GIS\Montgomery County Culverts - Bulk Storage Facilities2.mxd

Bulk Storage Facilities 3

Legend

Culvert Locations

- Bullshead Road
- Langley Road
- Pattersonville Road

Bulk Storage Facilities

- Chemical Bulk Storage
- Major Oil Storage Facility
- Petroleum Bulk Storage
- One Mile Project Site Buffer

Montgomery County Culverts
Bullshead Road, Langley Road,
Pattersonville Road
Montgomery County, New York

Tetra Tech, Inc

Path: C:\projects\Montgomery County Culverts 103P359222\MontgomeryCountyVGIS\Montgomery County Culverts - Bulk Storage Facilities6.mxd

Bulk Storage Facilities 4

Montgomery County Culverts
Shellstone Road
Montgomery County, New York

Legend

Culvert Locations

- Shellstone Road

Bulk Storage Facilities

- Chemical Bulk Storage
- Major Oil Storage Facility
- Petroleum Bulk Storage
- One Mile Project Site Buffer

Tetra Tech, Inc

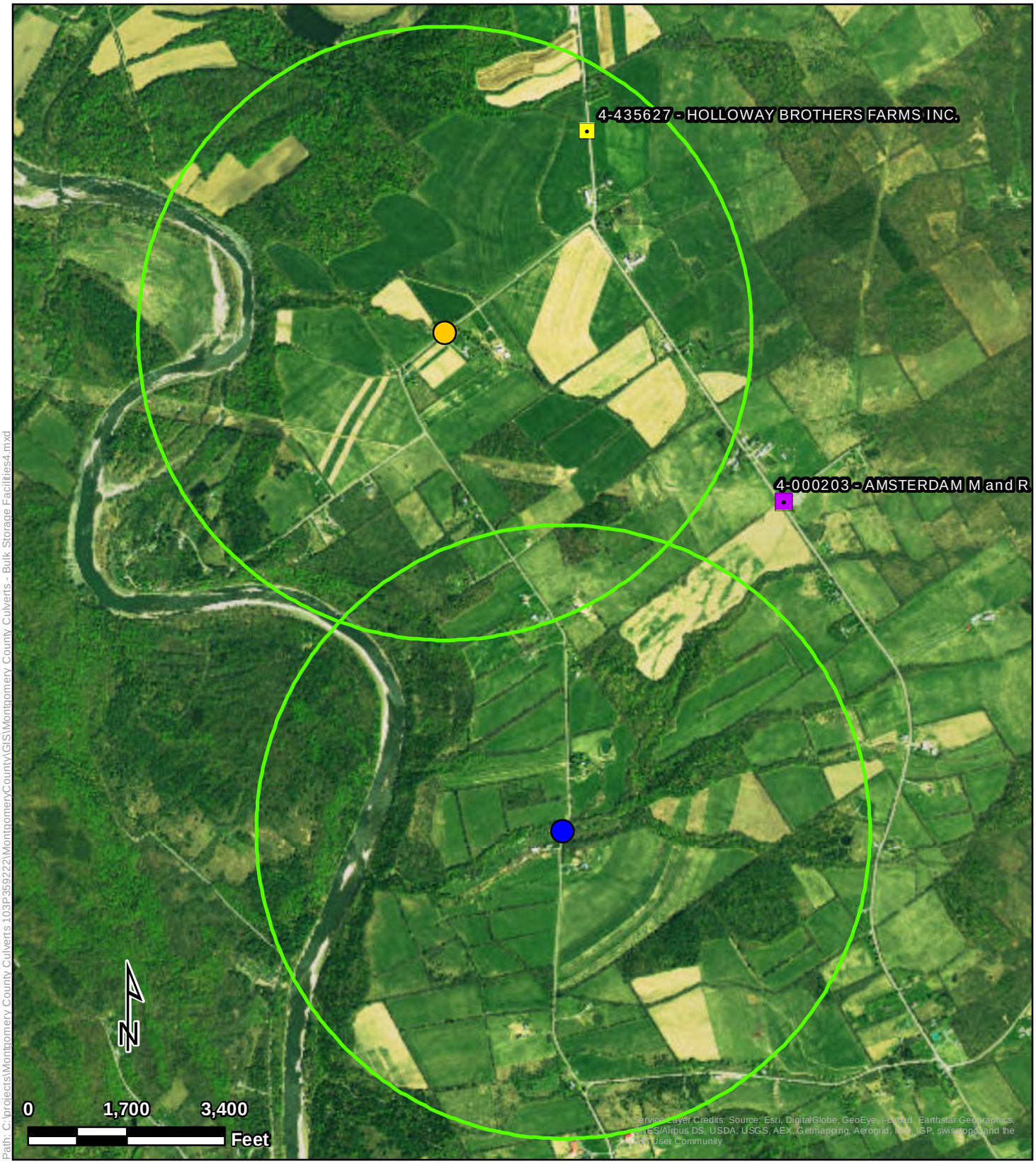

Path: C:\projects\Montgomery County Culverts 103P359222\MontgomeryCountyGIS\Montgomery County Culverts - Bulk Storage Facilities4.mxd

Bulk Storage Facilities 5

Montgomery County Culverts
McKinney Road
Montgomery County, New York

Legend

Culvert Locations

- McKinney Road 4A
- McKinney Road 4B

Bulk Storage Facilities

- Chemical Bulk Storage
- Major Oil Storage Facility
- Petroleum Bulk Storage
- One Mile Project Site Buffer

Tetra Tech, Inc

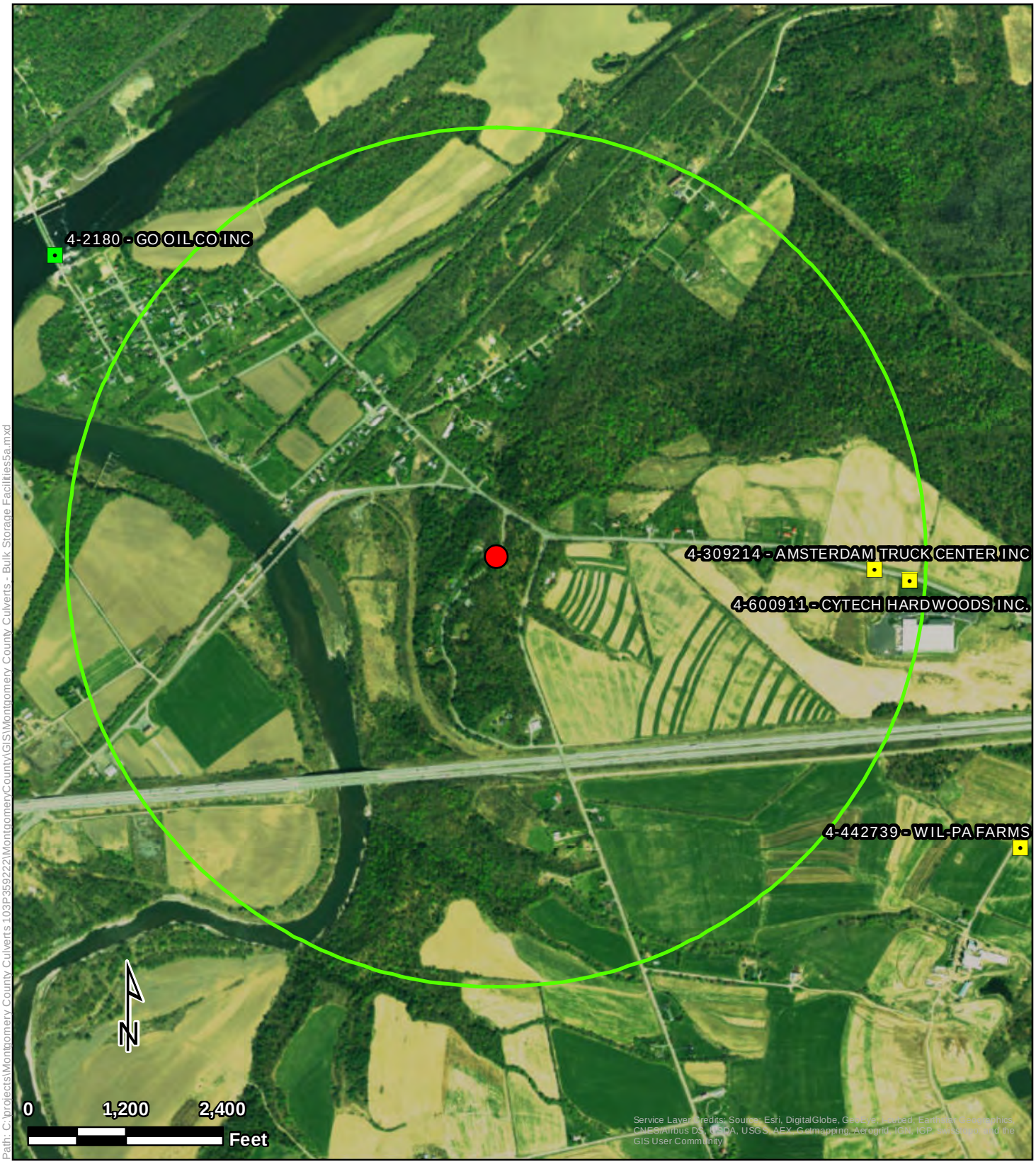

Path: C:\projects\Montgomery County Culverts 103P359222\MontgomeryCountyVGIS\Montgomery County Culverts - Bulk Storage Facilities5a.mxd

Bulk Storage Facilities 6

Montgomery County Culverts
Strevy Lane
Montgomery County, New York

Legend

Culvert Locations

- Strevy Lane

Bulk Storage Facilities

- Chemical Bulk Storage
- Major Oil Storage Facility
- Petroleum Bulk Storage
- One Mile Project Site Buffer

Tetra Tech, Inc

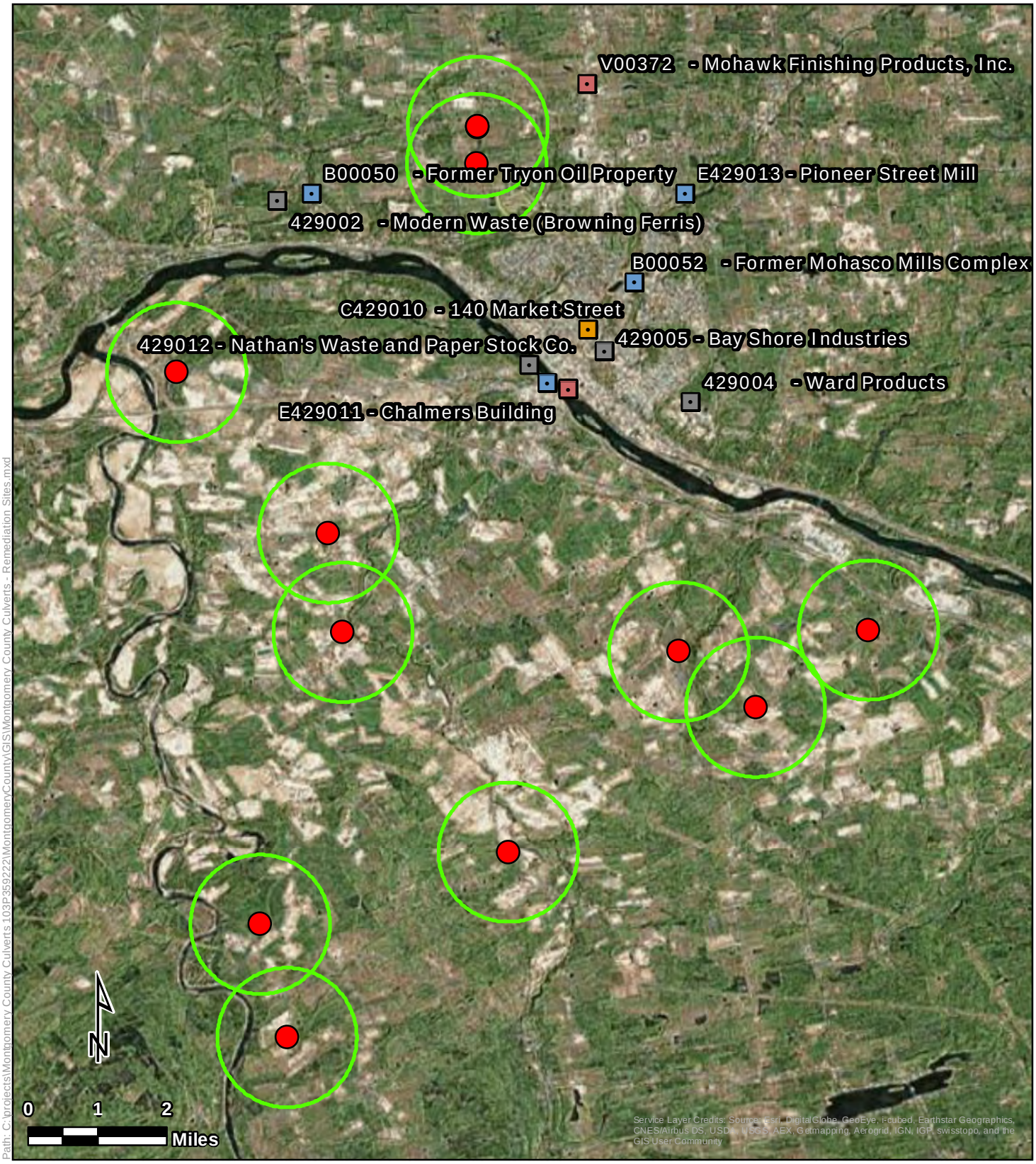

Path: C:\projects\Montgomery County Culverts 103P359222\MontgomeryCountyVGIS\Montgomery County Culverts - Remediation Sites.mxd

Legend

- Culvert Locations

Remediation Sites

- Brownfield Cleanup Program
- Environmental Restoration Program
- State Superfund Program
- Voluntary Cleanup Program
- One Mile Project Site Buffer

Remediation Sites

Montgomery County Culverts
Montgomery County, New York

Tetra Tech, Inc

Path: C:\projects\Montgomery County Culverts 103P359222\MontgomeryCountyVGIS\Montgomery County Culverts - Selected Protected Species.mxd

Legend

- Culvert Locations
- Seabeach Amaranth
- Roseate Tern
- Roseate Tern 1000M Buffer
- Piping Plover
- Piping Plover Buffer

Selected Protected Species

Montgomery County Culverts
Montgomery County, New York

Tetra Tech, Inc

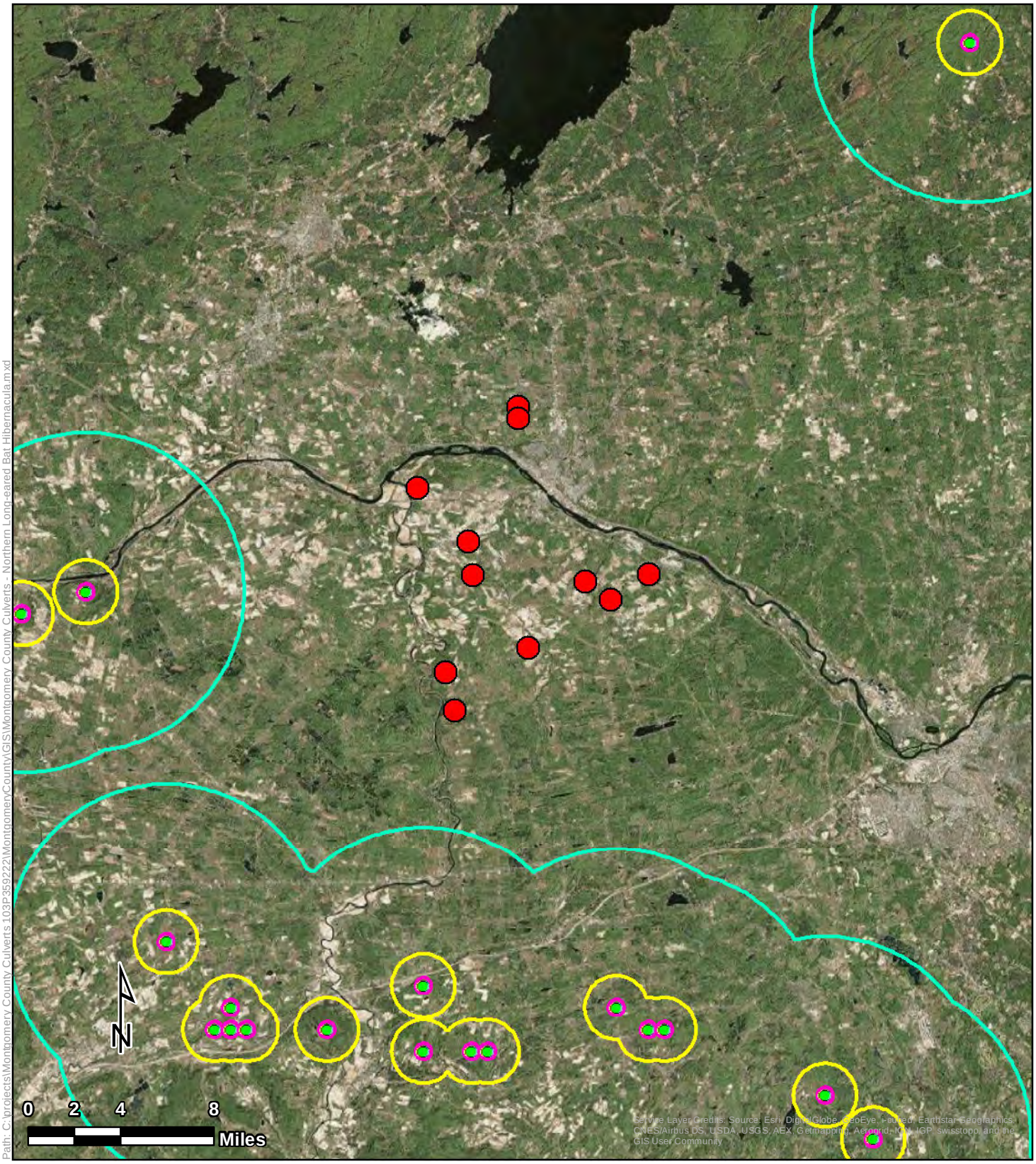

Path: C:\projects\Montgomery County Culverts 103P359222\MontgomeryCountyVGIS\Montgomery County Culverts - Northern Long-eared Bat Hibernacula.mxd

Northern Long-eared Bat Hibernacula

Montgomery County Culverts
Montgomery County, New York

Legend

- Culvert Locations
- NLEB Hibernacula
- NLEB Hibernacula 0.25 Mile Buffer
- NLEB Hibernacula 1 Mile Buffer
- NLEB Hibernacula 5 Mile Buffer

Tetra Tech, Inc

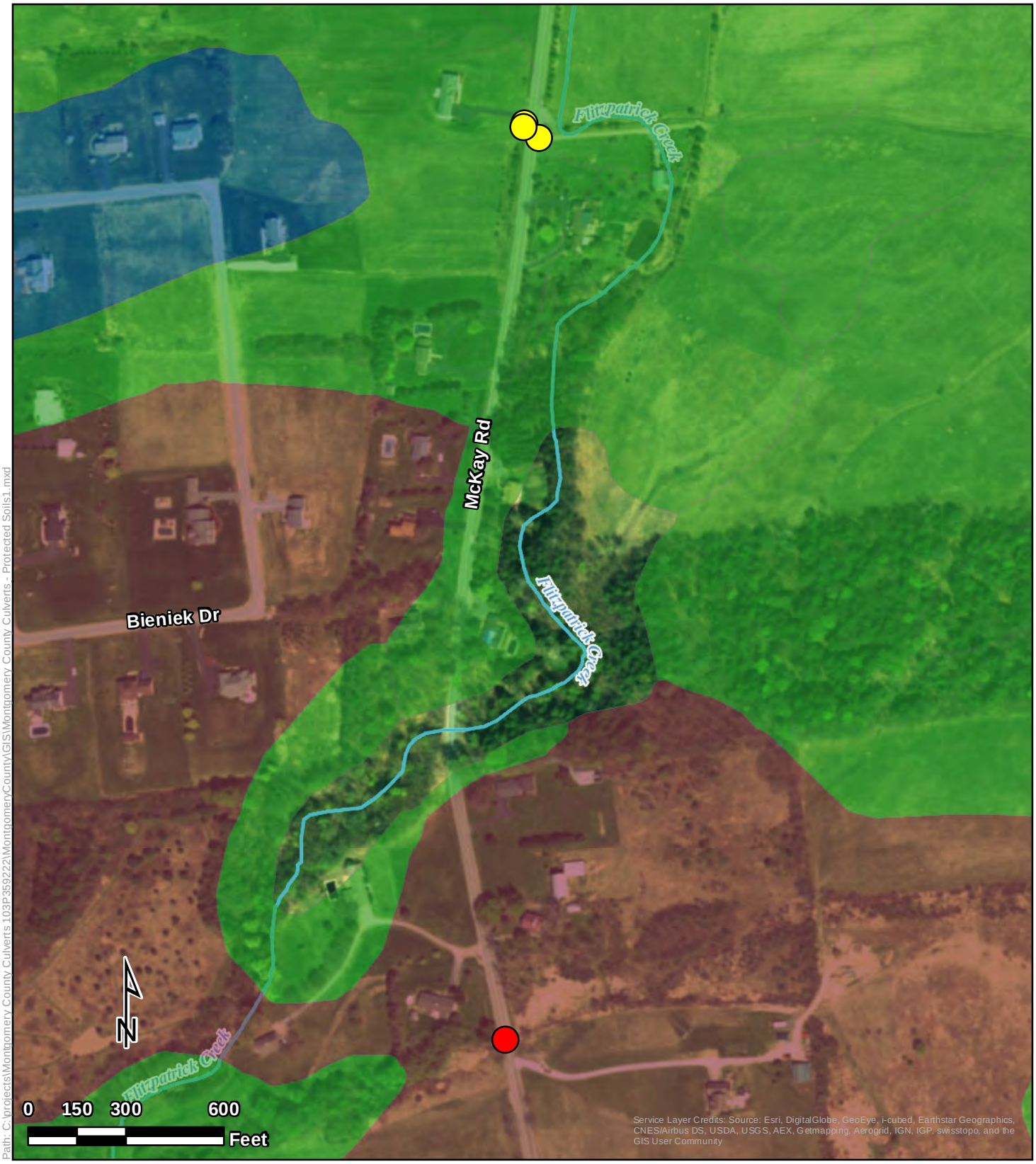

Path: C:\projects\Montgomery County Culverts 103P359222\MontgomeryCounty\GIS\Montgomery County Culverts - Protected Soils1.mxd

Legend

Culvert Locations

- McKay Road 1
- McKay Road 2
- All areas are prime farmland
- Farmland of statewide importance
- Prime farmland if drained

Protected Soils 1

Montgomery County Culverts
McKay Road
Montgomery County, New York

Tetra Tech, Inc

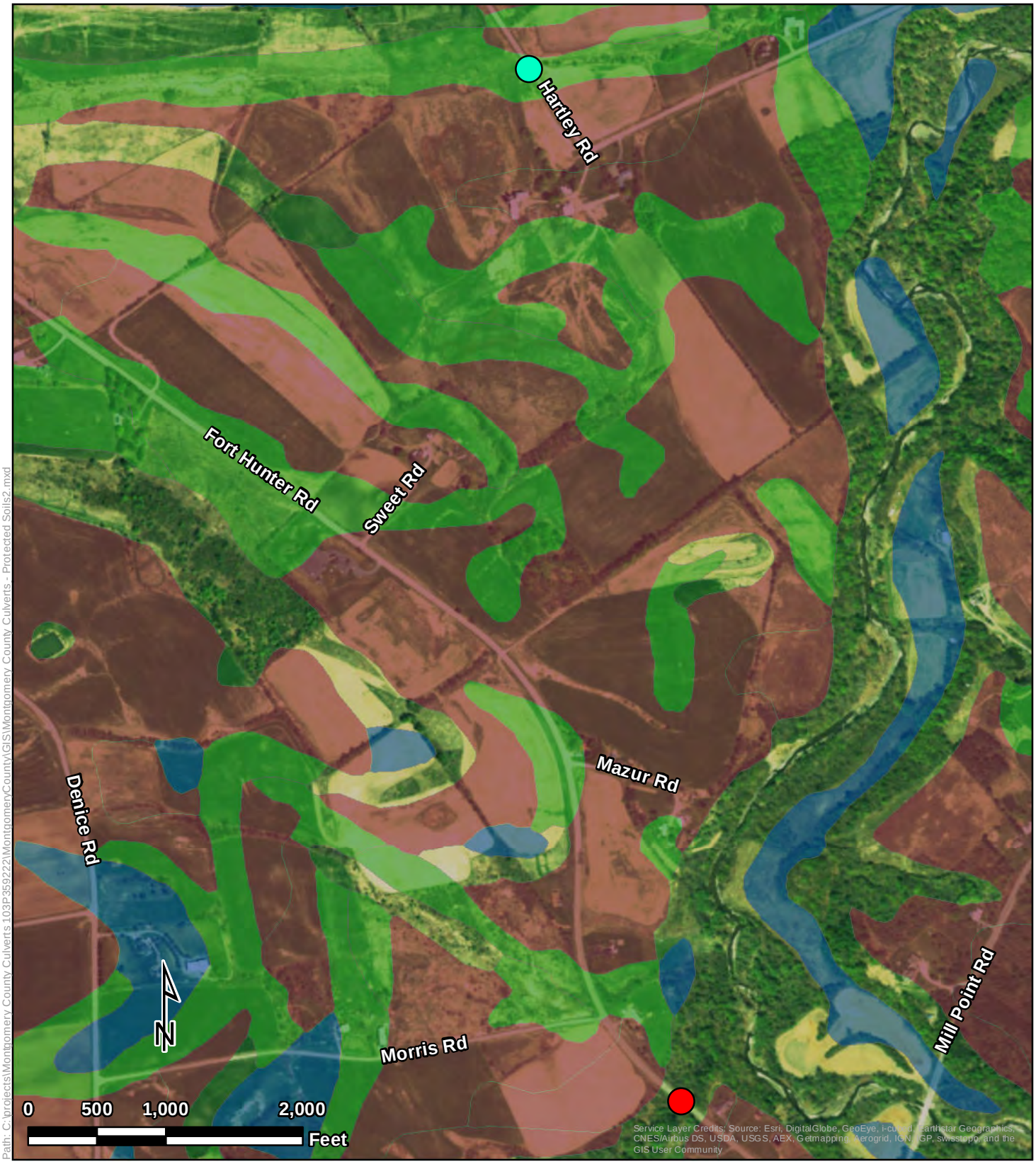

Path: C:\projects\Montgomery County Culverts 103P359222\MontgomeryCountyVGIS\Montgomery County Culverts - Protected Soils2.mxd

Legend

Culvert Locations

- Fort Hunter Road
- Hartley Road
- All areas are prime farmland
- Farmland of statewide importance
- Prime farmland if drained

Protected Soils 2

Montgomery County Culverts
Fort Hunter Road, Hartley Road
Montgomery County, New York

Tetra Tech, Inc

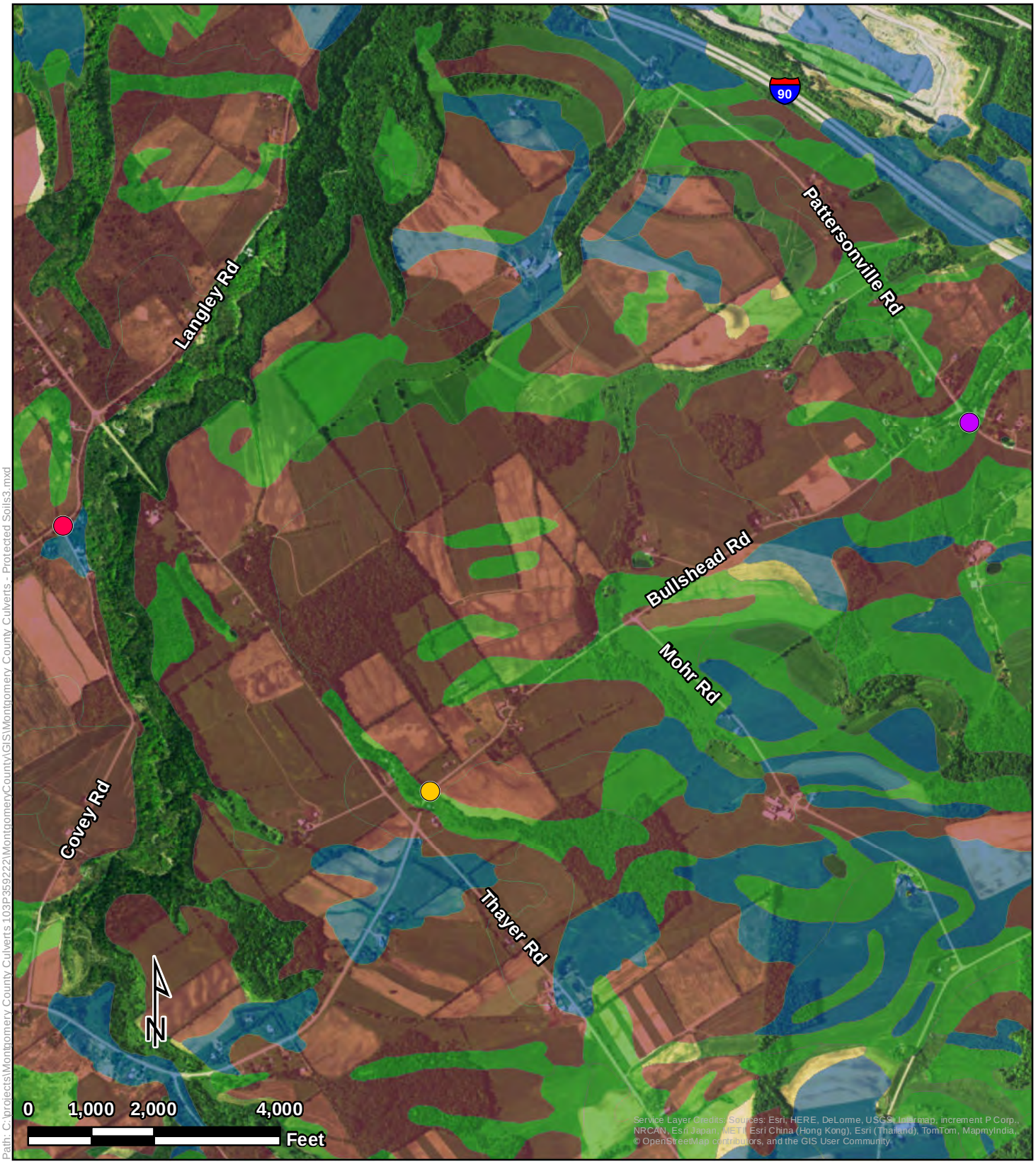

Path: C:\projects\Montgomery County Culverts 103P359222\MontgomeryCountyVGIS\Montgomery County Culverts - Protected Soils3.mxd

Legend

Culvert Locations

- Bullshead Road
- Langley Road
- Pattersonville Road

- All areas are prime farmland
- Farmland of statewide importance
- Prime farmland if drained

Protected Soils 3

Montgomery County Culverts
Bullshead Road, Langley Road, Pattersonville Road
Montgomery County, New York

Tetra Tech, Inc

Path: C:\projects\Montgomery County Culverts 103P359222\MontgomeryCounty\GIS\Montgomery County Culverts - Protected Soils4.mxd

Legend

Culvert Locations

- Shellstone Road
- All areas are prime farmland
- Farmland of statewide importance
- Prime farmland if drained

Protected Soils 4

Montgomery County Culverts
Shellstone Road
Montgomery County, New York

Tetra Tech, Inc

Path: C:\projects\Montgomery County Culverts 103P359222\MontgomeryCountyVGIS\Montgomery County Culverts - Protected Soils5.mxd

Legend

Culvert Locations

- McKinney Road 4A
- McKinney Road 4B
- All areas are prime farmland
- Farmland of statewide importance
- Prime farmland if drained

Protected Soils 5

Montgomery County Culverts
McKinney Road
Montgomery County, New York

Tetra Tech, Inc

Path: C:\projects\Montgomery County Culverts 103P359222\MontgomeryCounty\GIS\Montgomery County Culverts - Protected Soils6.mxd

Legend

Culvert Locations

- Strevy Lane
- All areas are prime farmland
- Farmland of statewide importance
- Prime farmland if drained

Protected Soils 6

Montgomery County Culverts
Strevy Lane
Montgomery County, New York

Tetra Tech, Inc

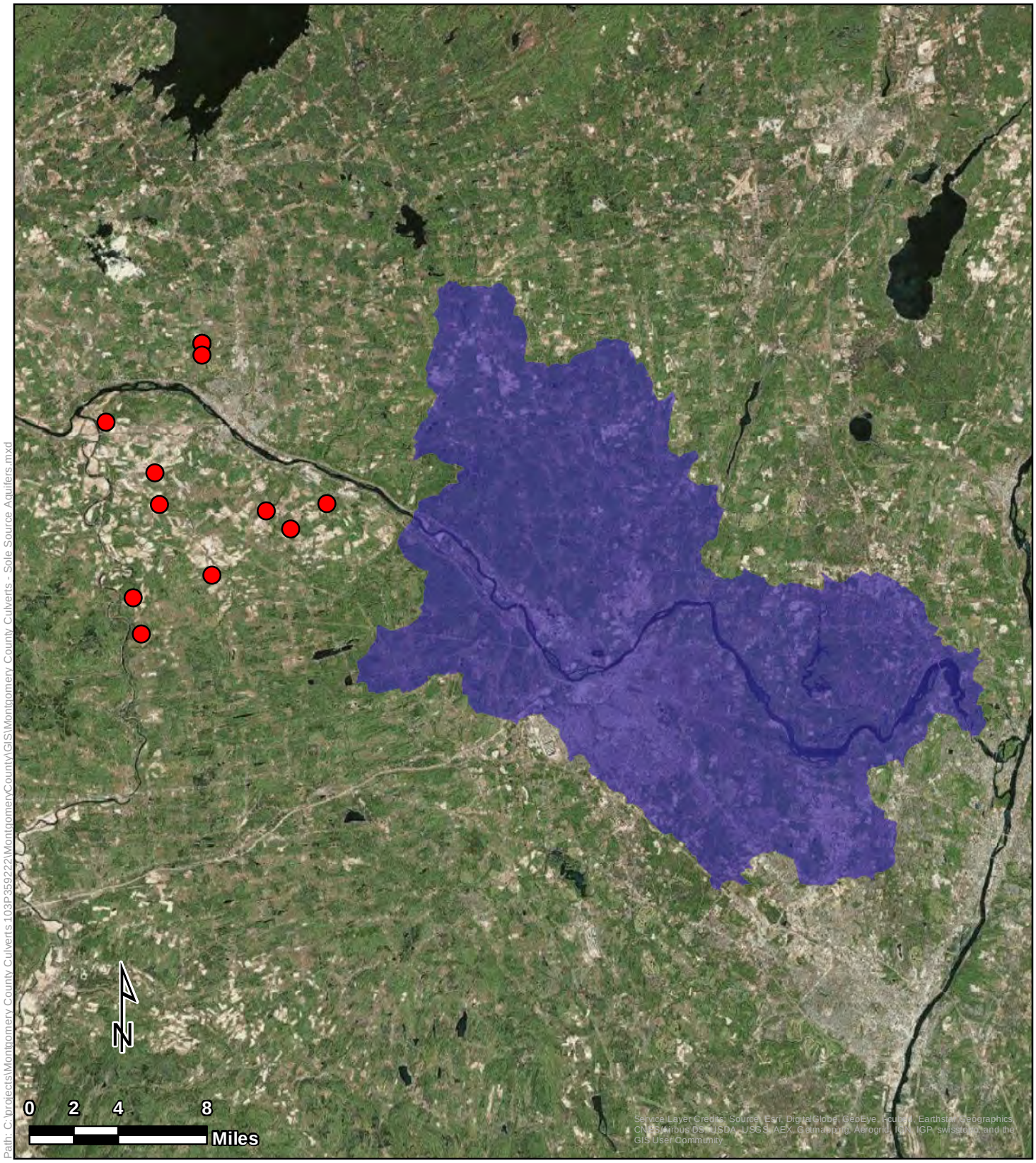

Path: C:\projects\Montgomery County Culverts 103P359222\MontgomeryCountyVGIS\Montgomery County Culverts - Sole Source Aquifers.mxd

Sole Source Aquifers

Montgomery County Culverts
Montgomery County, New York

Legend

- Culvert Locations
- Clinton Street Ballpark SSA
- Cortland-Homer Preble SSA
- Highlands SSA
- Northwest NJ 15 Basin SSA
- Ramapo SSA
- Ridgewood SSA
- Schenectady-Niskayuna SSA
- Upper Rockaway SSA

Tetra Tech, Inc

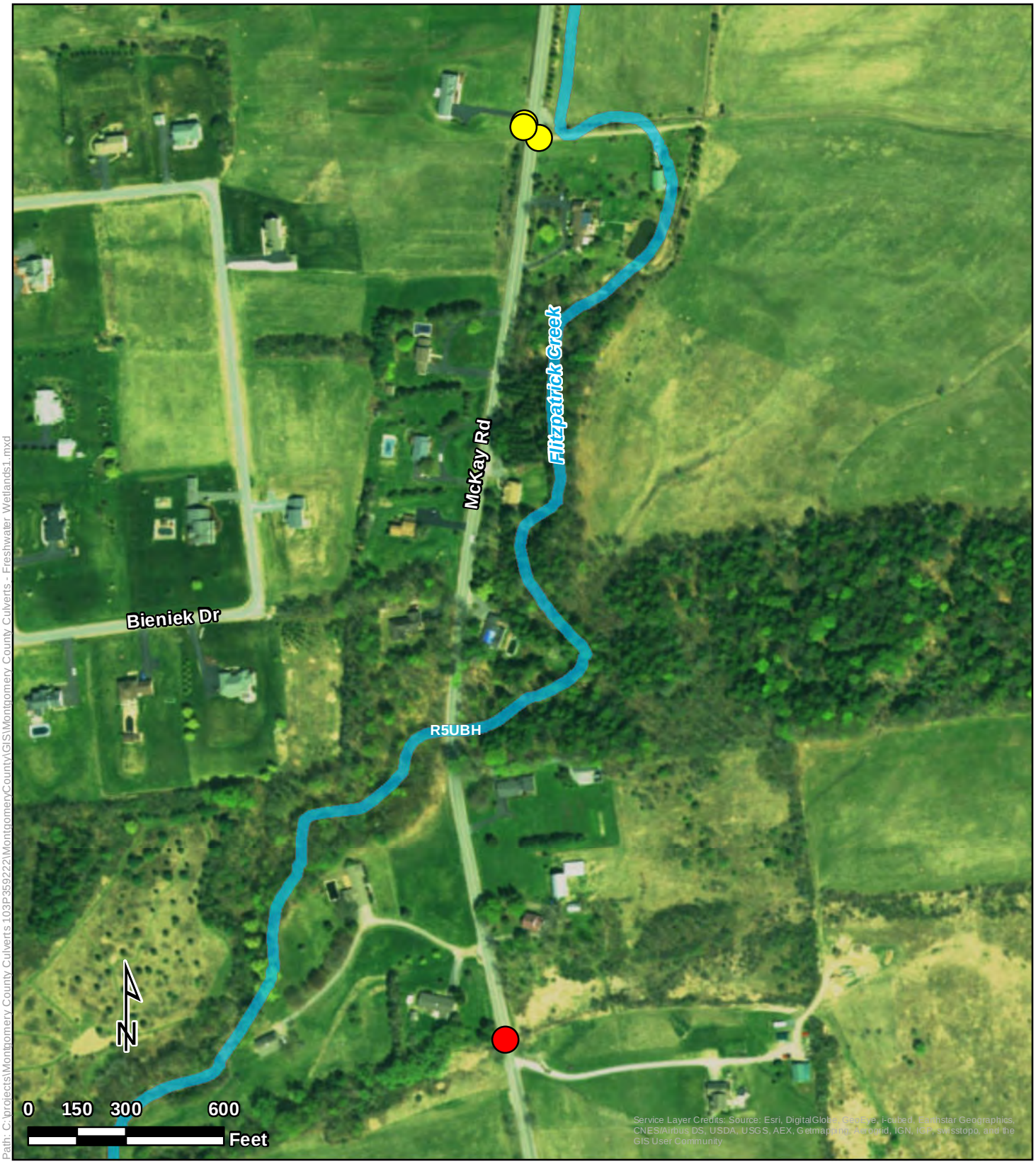

Path: C:\projects\Montgomery County Culverts 103P359222\MontgomeryCountyVGIS\Montgomery County Culverts - Freshwater Wetlands1.mxd

Legend

Culvert Locations

- McKay Road 1
- McKay Road 2
- NYS Freshwater Wetlands
- NYS Freshwater Wetlands Buffer

NWI Wetlands

- Riverine

Freshwater Wetlands 1

Montgomery County Culverts
McKay Road
Montgomery County, New York

Tetra Tech, Inc

Path: C:\projects\Montgomery County Culverts 103P359222\MontgomeryCountyGIS\Montgomery County Culverts - Freshwater Wetlands2.mxd

Legend

Culvert Locations

- Fort Hunter Road
- Hartley Road
- NYS Freshwater Wetlands
- NYS Freshwater Wetlands Buffer

NWI Wetlands

- Freshwater Pond
- Riverine

Freshwater Wetlands 2

Montgomery County Culverts
Fort Hunter Road, Hartley Road
Montgomery County, New York

Tetra Tech, Inc

Path: C:\projects\Montgomery County Culverts 103P359222\MontgomeryCountyGIS\Montgomery County Culverts - Freshwater Wetlands3.mxd

Freshwater Wetlands 3

Montgomery County Culverts
Bullshead Road,
Langley Road, Pattersonville Road
Montgomery County, New York

Legend

Culvert Locations

- Bullshead Road
- Langley Road
- Pattersonville Road

- NYS Freshwater Wetlands
- NYS Freshwater Wetlands Buffer

NWI Wetlands

- Freshwater Pond
- Riverine

Tetra Tech, Inc

Path: C:\projects\Montgomery County Culverts 103P359222\MontgomeryCountyVGIS\Montgomery County Culverts - Freshwater Wetlands4.mxd

Legend

Culvert Locations

- Shellstone Road
- NYS Freshwater Wetlands
- NYS Freshwater Wetlands Buffer

NWI Wetlands

- Freshwater Pond
- Riverine

Freshwater Wetlands 4

Montgomery County Culverts
Shellstone Road
Montgomery County, New York

Tetra Tech, Inc

Path: C:\projects\Montgomery County Culverts 103P359222\MontgomeryCounty\GIS\Montgomery County Culverts - Freshwater Wetlands5.mxd

Legend

Culvert Locations

- McKinney Road 4A
- McKinney Road 4B
- NYS Freshwater Wetlands
- NYS Freshwater Wetlands Buffer

NWI Wetlands

- Riverine

Freshwater Wetlands 5

Montgomery County Culverts
McKinney Road
Montgomery County, New York

Tetra Tech, Inc

Path: C:\projects\Montgomery County Culverts 103P359222\MontgomeryCounty\GIS\Montgomery County Culverts - Freshwater Wetlands6.mxd

Legend

Culvert Locations

- Strevy Lane
- NYS Freshwater Wetlands
- NYS Freshwater Wetlands Buffer

NWI Wetlands

- Riverine

Freshwater Wetlands 6

Montgomery County Culverts
Strevy Lane
Montgomery County, New York

Tetra Tech, Inc

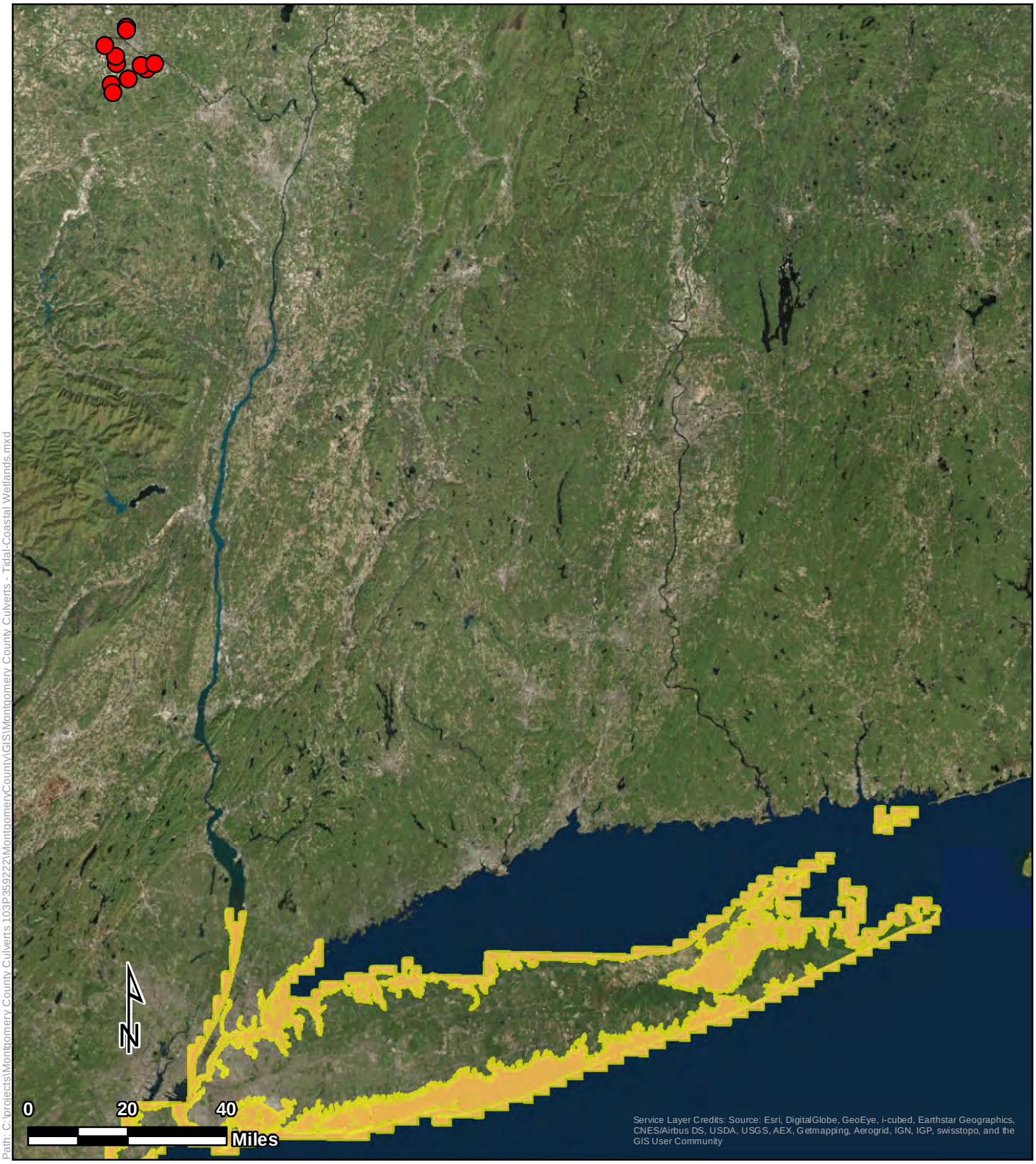

Path: C:\projects\Montgomery County Culverts 103P359222\MontgomeryCountyVGIS\Montgomery County Culverts - Tidal-Coastal Wetlands.mxd

Tidal-Coastal Wetlands

Montgomery County Culverts
Montgomery County, New York

Legend

- Culvert Locations
- Tidal - Coastal Wetlands
- Tidal - Coastal Wetlands 300ft Buffer

Tetra Tech, Inc

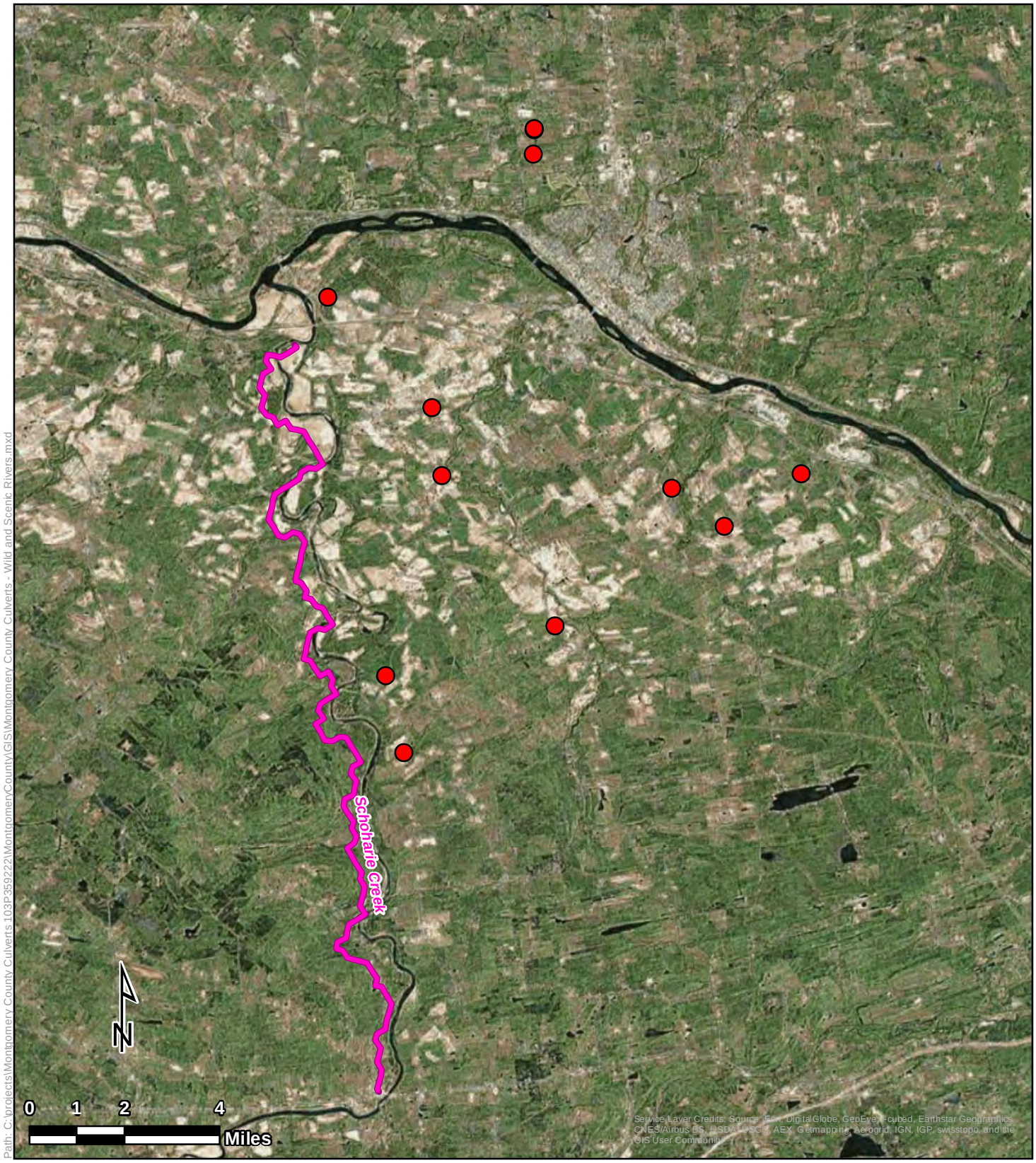

Path: C:\projects\Montgomery County Culverts 103P359222\MontgomeryCounty\GIS\Montgomery County Culverts - Wild and Scenic Rivers.mxd

Wild and Scenic Rivers

Montgomery County Culverts
Montgomery County, New York

Legend

- Culvert Locations
- Wild and Scenic Rivers

Tetra Tech, Inc

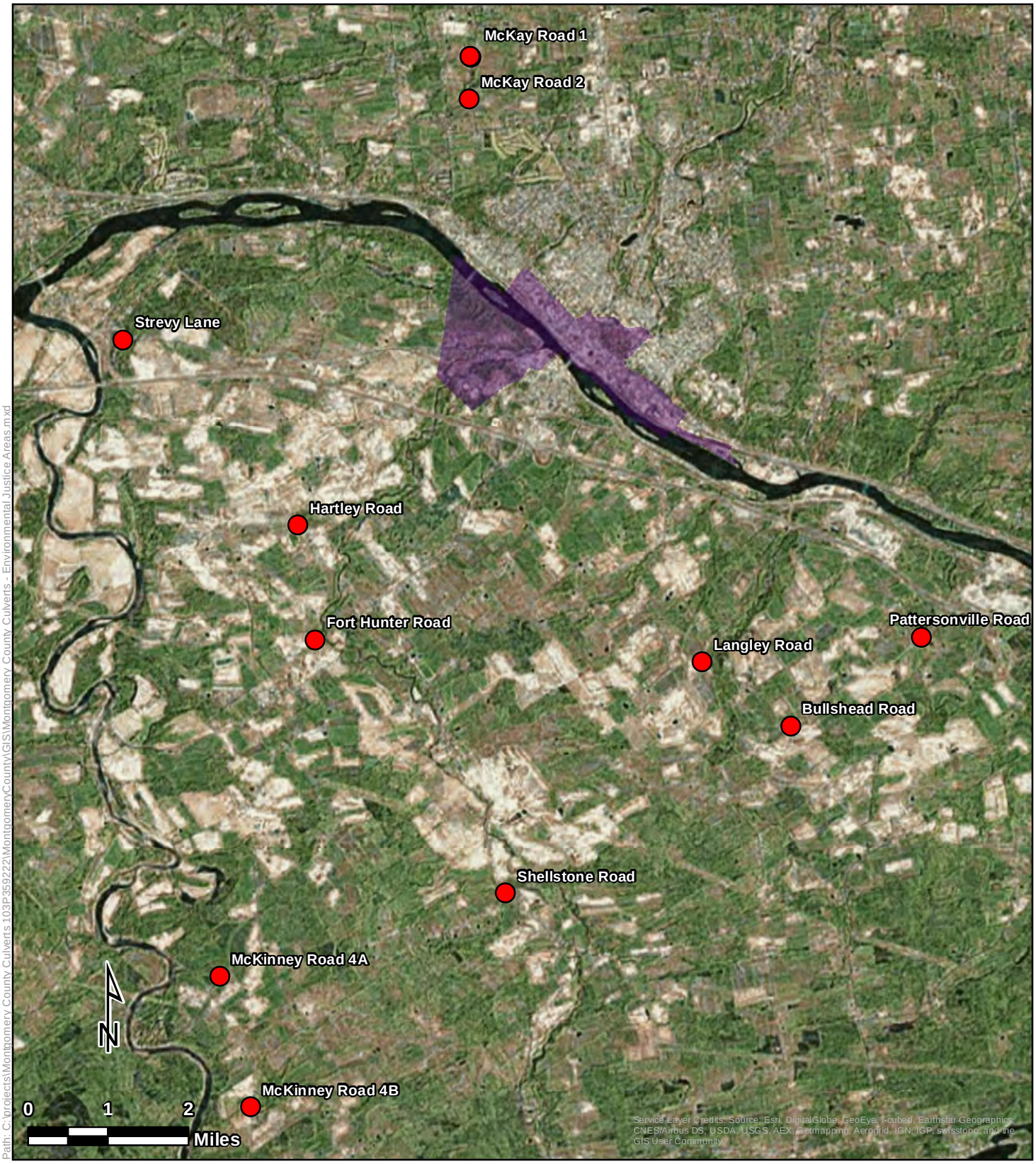

Path: C:\projects\Montgomery County Culverts 103P359222\MontgomeryCountyVGIS\Montgomery County Culverts - Environmental Justice Areas.mxd

Environmental Justice Areas

Legend

- Culvert Locations
- Environmental Justice Areas

Montgomery County Culverts
Montgomery County, New York

Tetra Tech, Inc

APPENDIX B
USFWS AND NYNHP
CORRESPONDENCE

Governor's Office of
Storm Recovery

ANDREW M. CUOMO
Governor

LISA BOVA-HIATT
Executive Director

By Electronic Mail

May 19, 2017

Robyn A. Niver
Endangered Species Biologist USFWS
New York Field Office
Cortland, NY 13045

Re: Section 7 Project Review - ESA/MBTA/BGEPA **Second** Consultation for the Montgomery County Culvert Replacement Project, Towns of Florida and Amsterdam, Montgomery County, New York

Dear Ms. Niver:

The Governor's Office of Storm Recovery (GOSR), acting under the auspices of New York State Homes and Community Renewal's (HCR) Housing Trust Fund Corporation (HTFC), on behalf of the Department of Housing & Urban Development (HUD), is conducting an environmental review under HUD's environmental review regulations (24 CFR Part 58) and New York State's Environmental Quality Review Act (SEQRA) for the Montgomery County Culvert Replacement Project, located in the Towns of Florida and Amsterdam, Montgomery County, New York. GOSR is acting as HUD's non-federal representative for the purposes of conducting consultation pursuant to Section 7 of the Endangered Species Act.

The purpose of this letter is to provide the U.S. Fish and Wildlife Service – New York Field Office (USFWS) notice of the proposed project and to document compliance with Section 7 of the Endangered Species Act (ESA) (87 Stat. 884, as amended; 16 U.S.C. 1531 et seq.), as well as the Migratory Bird Treaty Act of 1918 (MBTA) (40 Stat. 755, as amended; 16 U.S.C. 703-712), and the Bald and Golden Eagle Protection Act of 1940 (BGEPA) (54 Stat. 240, as amended; 16 U.S.C. 668-668c). GOSR submitted a consultation to USFWS on March 6, 2017 (**Attachment 1**). **The project has changed in scope to include the removal of trees adjacent to the culvert on Langley Road as described below.**

Program Overview: New York State experienced a number of storms (e.g., Hurricane Irene, Tropical Storm Lee, and Hurricane Sandy) that caused substantial damage over the last decade. This trend has increased the need for improved storm water management systems and mitigation of damage to transportation corridors to support storm-stricken communities. In the Towns of Florida and Amsterdam, the flood waters from Hurricane Irene eroded the banks of local creeks and caused property damage to residences. Many roads were washed out. Steep grades in the towns caused storm water runoff to flow down hillsides and collect and backup at undersized culverts. The proposed culvert replacement would mitigate the damage to the existing culverts, allowing the restored use of a damaged roadways, and would protect them from damage during future storm and would increase the towns' resiliency.

Area of Potential Effect: Montgomery County is proposing to replace 11 existing culverts in the Town of Florida and the Town of Amsterdam, at the following locations (**see Attachment 1**):

- Culvert 4A at McKinney Road, approximately 1,600 feet north of Lost Valley Road in the Town of Florida;
- Culvert 4B at McKinney Road, approximately 3,200 feet north of Peck Road in the Town of Florida;
- Culvert 5B at Bullshead Road, approximately 450 feet north of Thayer Road in the Town of Florida;
- Culvert 6A at Pattersonville Road, approximately 100 feet south of Bullshead Road in the Town of Florida;
- Fort Hunter Road, approximately 560 feet southeast of Morris Road in the Town of Florida;
- Hartley Road, approximately 900 feet southeast of Snooks Corners Road in the Town of Florida;
- Langley Road, approximately 700 feet southwest of Thayer Road in the Town of Florida – **Trees adjacent to the one of the outfalls will be removed and are shown in Attachment 2**;
- McKay Road No. 1 at McKay Road, approximately 600 feet south of McDonald Drive in the Town of Amsterdam;
- McKay Road No. 2 at McKay Road, approximately 2,000 feet south of McDonald Drive in the Town of Amsterdam;
- Strevy Lane, approximately 1,100 feet northwest of its intersection with Fort Hunter Road in the Town of Florida; and
- Shellstone Road, approximately 200 feet southwest of State Route 30/Sulphur Springs Road in the Town of Florida.

Proposed Project Description: The Project would include replacement and realignment of 11 culverts on or along McKinney Road, Bullshead Road, Pattersonville Road, Fort Hunter Road, Hartley Road, Langley Road, McKay Road, Strevy Lane, and Shellstone Road in the Towns of Florida and Amsterdam, Montgomery County, New York. The smaller culverts would be made of high density polyethylene (HDPE) and the larger culverts would be four sided precast concrete box culverts. At several locations the project would include removal of existing headwalls, stream reshaping and installation of rip-rap at the inlet and outlet of the proposed culvert, and alignment correction. The culvert bottoms would have embedment (i.e., be filled to an appropriate depth) of natural streambed material (see **Attachment 1**). It is anticipated that construction would involve substantial earthwork, and temporary or permanent easements may be required. Construction would occur within the existing rights-of-way of each road to the extent feasible. Trees will be removed from one of the culvert locations.

ESA, Migratory Bird Treaty Act, And Bald and Golden Eagle Protection Act Species: The USFWS, New York Ecological Services Field Office was contacted through the Information, Planning, and Conservation System (IPaC) regarding the potential presence of species under the jurisdiction of the USFWS within the project area. The IPaC review identified one threatened species that is potentially associated with the project site: the northern long-eared bat (NLEB) (*Myotis septentrionalis*) (see **Attachment 1**). The IPaC review also indicated that there are several migratory birds of concern that could potentially be affected by the proposed project.

Analysis and Determination of Effects:

ESA

Montgomery County is within the Counties/Districts with White Nose Syndrome Infected Hibernacula. According to geospatial information provided by USFWS, the project site is not within 0.25 miles of known or assumed hibernacula (see **Attachment 1**) for the NLEB, nor are there documented or assumed maternity roosts

within 150 feet of the project site. In correspondence dated February 3, 2017, GOSR requested that the NY Natural Heritage Program (NYNHP) provide any records of occurrence of NYS-listed species in the vicinity of the project site, including the NLEB. The response received from the NYNHP on February 24, 2017, stated that it has no records of rare or state-listed animals or plants, or significant natural communities at the project site or in its immediate vicinity (**See Attachment 1**). The estimated date for tree removal is November 1 through March 31.

The NLEB, listed as federally threatened, is a temperate, insectivorous bat whose life cycle can be coarsely divided into two primary phases - reproduction and hibernation. NLEB hibernate in caves or mines during winter and then emerge in early spring, with males dispersing and remaining solitary until mating season at the end of the summer, and pregnant females forming maternity colonies in which to rear young. No caves or mines occur near the project site. Summer habitat of the NLEB generally includes upland and riparian forest within heavily forested landscapes (Ford et al. 2005, Henderson et al. 2008). The NLEB is sensitive to fragmentation and urbanization, and requires interior forest for both foraging and breeding (Foster and Kurta 1999, Broders et al. 2006, Henderson et al. 2008). Roost trees are usually in intact forest, close to the core and away from large clearings, roads, or other sharp edges (Menzel et al. 2002, Owen et al. 2003, Carter and Feldhammer 2005).

Based on the NLEB habitat, tree removal may impact the reproduction and habitat availability. If tree removal is deemed necessary, no more than five trees will be removed. The anticipated tree removal is expected to occur between November 1 and March 31. The number of trees to be removed will be more than five (five or less trees) and the impact from the removal is not anticipated to impact available habitat for NLEB. The area surrounding the tree removal has nearby wooded areas providing other available suitable habitat. The major concern for bat species in relation to this project is the destruction of potential roosts and roosting habitat. The project does not take place within known occupied habitat and would not destroy known roosts or roosting habitat. The trees to be removed will be clearly marked to avoid unnecessary tree removal. Additionally, the proposed project would not jeopardize the continued existence of ESA species or destroy or adversely modify their critical habitat. The project area is not within five miles of bat hibernacula or known maternity colonies.

Due to the potential for construction schedule changes and the resulting active season tree removal, GOSR determines that this project may affect the NLEB, but that any resulting incidental take of the NLEB is not prohibited by the final 4(d) rule (see **Attachment 3**). Tree removal, however, is anticipated to occur between November 1 and March 31. All activities associated with the proposed project will not:

1) disturb hibernating NLEBs in a known hibernaculum;
2) alter the entrance or interior environment of a known hibernaculum;
3) remove any trees within 0.25 miles of a known hibernaculum at any time of year; or
4) cut or destroy known occupied maternity roost trees, or any other trees within a 150-foot radius from the maternity roost tree, during the pup season (June 1 through July 31).

If the USFWS does not respond within 30 days from submittal of this form, GOSR may presume that its determination is informed by the best available information and that its project responsibilities under 7(a)(2) with respect to the NLEB are fulfilled through the USFWS January 5, 2016, "Programmatic Biological Opinion (BO) on the Final 4(d) Rule for the Northern Long-Eared Bat and Activities Excepted from Take Prohibitions." GOSR will update this determination annually for multi-year activities.

GOSR understands that the USFWS presumes that all activities are implemented as described herein. GOSR will promptly report any departures from the described activities to the New York Field Office. GOSR will provide the New York Field Office with the results of any surveys conducted for the NLEB. Involved parties will promptly notify the New York Field Office upon finding a dead, injured, or sick NLEB.

MBA

According to the USFWS IPaC report there are several migratory birds of concern that could potentially be affected by the proposed project. GOSR has determined that the project would have no significant adverse impact on migratory birds or their habitat, since no trees would be removed. It is anticipated that passerine birds would temporarily leave the area during construction due to noise and disturbance. Extensive areas of high quality woodland habitat are available Montgomery County (see Attachment 1).

BGEPA

The IPaC review process identified the bald eagle as having year-round habitat in Montgomery County that may be potentially affected by activities in the project area. GOSR has determined that the proposed project would have no significant adverse impact on bald eagles. The project area is not located within the vicinity of documented bald eagle breeding. As with other migratory birds, foraging bald eagles may temporarily avoid the area during construction due to noise and disturbance.

Conclusions

The proposed project would not jeopardize the continued existence of ESA species or destroy or adversely modify their critical habitat and will not destroy NLEB known roosts. There is a potential for NLEB active season tree removal. On this basis, GOSR has determined that the project may affect the NLEB, but that any resulting incidental take of the NLEB is not prohibited by the final 4(d) rule and would have no significant adverse impact on migratory birds or bald eagles. We request your concurrence with this determination. Additionally, we request to be alerted if USFWS becomes aware of a Bald or Golden Eagle nest within 660 feet of the culvert locations.

If USFWS does not respond within 30 days from submittal of this letter, then GOSR may presume that its determination for each project is informed by the best available information and its project responsibilities under Section 7 of the ESA have been fulfilled. GOSR understands that the USFWS presumes that all activities will be implemented as described herein. GOSR will promptly report any departures from the described activities to the New York Field Office.

If you have questions or require additional information regarding this request, please contact me at (518) 474-0647 or Alicia.Shultz@nyshcr.org. Thank you for your time and consideration.

Sincerely,

Alicia Shultz
Senior Environmental Scientist
Governor's Office of Storm Recovery
NYS Homes and Community Renewal

Attachment:
1 – USFWS consultation March 6, 2017

2 – Aerial showing Langley Road Culvert
3 - Northern Long-Eared Bat 4(d) Rule Streamlined Consultation Form

Literature Cited

Broders, H.G., G.J. Forbes, S. Woodley, and I.D. Thompson. 2006. Range extent and stand selection for forest-dwelling northern long-eared and little brown bats in New Brunswick. Journal of Wildlife Management 70: 1174-1184.

Carter, T.C., and G.A. Feldhamer. 2005. Roost tree use by maternity colonies of Indiana bats and northern long-eared bats in southern Illinois. Forest Ecology and Management 219:259-268.

Ford, W.M., M.A. Menzel, J.L. Rodrigue, J.M. Menzel, and J.B. Johnson. 2005. Relating bat species presence to simple habitat measures in a central Appalachian forest. Biological Conservation 126: 528-539.

Foster, R.W. and A. Kurta, A. 1999. Roosting ecology of the northern bat (Myotis septentrionalis) and comparisons with the endangered Indiana bat (Myotis sodalis). Journal of Mammalogy 80: 659-672.

Henderson, L.E., L.J. Farrow, and H.G. Broders. 2008. Intra-specific effects of forest loss on the distribution of the forest-dependent northern long-eared bat (Myotis septentrionalis). Biological Conservation 141:1819-1828.

Menzel, M.A., S.F. Owen, W.M. Ford, J.W. Edwards, P.B. Wood, B.R. Chapman, and K.V. Miller. 2002. Roost tree selection by northern long-eared bat (Myotis septentrionalis) maternity colonies in an industrial forest of the central Appalachian mountains. Forest Ecology and Management 155:107-114.

Owen, S.F., M.A. Menzel, W.M. Ford, B.R. Chapman, K.V. Miller, J.W. Edwards, and P.B. Wood. 2003. Home-range size and habitat used by the northern myotis (Myotis septentrionalis). American Midland Naturalist 150:352-359.

Governor's Office of
Storm Recovery

ANDREW M. CUOMO
Governor

LISA BOVA-HIATT
Executive Director

By Electronic Mail

March 6, 2017

Robyn A. Niver
Endangered Species Biologist USFWS
New York Field Office
Cortland, NY 13045

Re: Section 7 Project Review - ESA/MBTA/BGEPA Consultation for the Montgomery County Culvert Replacement Project, Towns of Florida and Amsterdam, Montgomery County, New York

Dear Ms. Niver:

The Governor's Office of Storm Recovery (GOSR), acting under the auspices of New York State Homes and Community Renewal's (HCR) Housing Trust Fund Corporation (HTFC), on behalf of the Department of Housing & Urban Development (HUD), is conducting an environmental review under HUD's environmental review regulations (24 CFR Part 58) and New York State's Environmental Quality Review Act (SEQRA) for the Montgomery County Culvert Replacement Project, located in the Towns of Florida and Amsterdam, Montgomery County, New York (see **Figure 1**). GOSR is acting as HUD's non-federal representative for the purposes of conducting consultation pursuant to Section 7 of the Endangered Species Act.

The purpose of this letter is to provide the U.S. Fish and Wildlife Service – New York Field Office (USFWS) notice of the proposed project and to document compliance with Section 7 of the Endangered Species Act (ESA) (87 Stat. 884, as amended; 16 U.S.C. 1531 et seq.), as well as the Migratory Bird Treaty Act of 1918 (MBTA) (40 Stat. 755, as amended; 16 U.S.C. 703-712), and the Bald and Golden Eagle Protection Act of 1940 (BGEPA) (54 Stat. 240, as amended; 16 U.S.C. 668-668c). As discussed below, we have reviewed the project and found that the proposed would have **No Effect** on ESA species under USFWS jurisdiction.

Program Overview: New York State experienced a number of storms (e.g., Hurricane Irene, Tropical Storm Lee, and Hurricane Sandy) that caused substantial damage over the last decade. This trend has increased the need for improved storm water management systems and mitigation of damage to transportation corridors to support storm-stricken communities. In the Towns of Florida and Amsterdam, the flood waters from Hurricane Irene eroded the banks of local creeks and caused property damage to residences. Many roads were washed out. Steep grades in the towns caused storm water runoff to flow down hillsides and collect and backup at undersized culverts. The proposed culvert replacement would mitigate the damage to the existing culverts, allowing the restored use of a damaged roadways, and would protect them from damage during future storm and would increase the towns' resiliency.

Area of Potential Effect: Montgomery County is proposing to replace 11 existing culverts in the Town of Florida and the Town of Amsterdam, at the following locations (see **Figure 1**):

- Culvert 4A at McKinney Road, approximately 1,600 feet north of Lost Valley Road in the Town of Florida;
- Culvert 4B at McKinney Road, approximately 3,200 feet north of Peck Road in the Town of Florida;
- Culvert 5B at Bullshead Road, approximately 450 feet north of Thayer Road in the Town of Florida;
- Culvert 6A at Pattersonville Road, approximately 100 feet south of Bullshead Road in the Town of Florida;
- Fort Hunter Road, approximately 560 feet southeast of Morris Road in the Town of Florida;
- Hartley Road, approximately 900 feet southeast of Snooks Corners Road in the Town of Florida;
- Langley Road, approximately 700 feet southwest of Thayer Road in the Town of Florida;
- McKay Road No. 1 at McKay Road, approximately 600 feet south of McDonald Drive in the Town of Amsterdam;
- McKay Road No. 2 at McKay Road, approximately 2,000 feet south of McDonald Drive in the Town of Amsterdam;
- Strevy Lane, approximately 1,100 feet northwest of its intersection with Fort Hunter Road in the Town of Florida; and
- Shellstone Road, approximately 200 feet southwest of State Route 30/Sulphur Springs Road in the Town of Florida.

Proposed Project Description: The Project would include replacement and realignment of 11 culverts on or along McKinney Road, Bullshead Road, Pattersonville Road, Fort Hunter Road, Hartley Road, Langley Road, McKay Road, Strevy Lane, and Shellstone Road in the Towns of Florida and Amsterdam, Montgomery County, New York. The smaller culverts would be made of high density polyethylene (HDPE) and the larger culverts would be four sided precast concrete box culverts. At several locations the project would include removal of existing headwalls, stream reshaping and installation of rip-rap at the inlet and outlet of the proposed culvert, and alignment correction. The culvert bottoms would have embedment (i.e., be filled to an appropriate depth) of natural streambed material (see attached **Preliminary Site Plans**). It is anticipated that construction would involve substantial earthwork, and temporary or permanent easements may be required. Construction would occur within the existing rights-of-way of each road to the extent feasible.

ESA, Migratory Bird Treaty Act, And Bald and Golden Eagle Protection Act Species: The USFWS, New York Ecological Services Field Office was contacted through the Information, Planning, and Conservation System (IPaC) regarding the potential presence of species under the jurisdiction of the USFWS within the project area. The IPaC review and Official Species List identified one threatened species that is potentially associated with the project site: the northern long-eared bat (NLEB) (*Myotis septentrionalis*) (see attached **Official Species List**). The IPaC review also indicated that there are several migratory birds of concern that could potentially be affected by the proposed project.

Analysis and Determination of Effects:

ESA

Montgomery County is within the Counties/Districts with White Nose Syndrome Infected Hibernacula. According to geospatial information provided by USFWS, the project site is not within 0.25 miles of known or assumed hibernacula (see **Figure 2**) for the NLEB, nor are there documented or assumed maternity roosts within 150 feet of the project site. In correspondence dated February 3, 2017, GOSR requested that the NY Natural Heritage Program (NYNHP) provide any records of occurrence of NYS-listed species in the vicinity of the project site, including the NLEB. The response received from the NYNHP on February 24, 2017, stated that it has no records of rare or state-listed animals or plants, or significant natural communities at the project site or

in its immediate vicinity. (See attached New **York Natural Heritage Program Review**.) Since the proposed project would not involve the removal of any trees, GOSR determines that this project would have **No Effect** on the NLEB. Additionally, the proposed project would not jeopardize the continued existence of ESA species or destroy or adversely modify their critical habitat. The project area is not within five miles of bat hibernacula or known maternity colonies and involves no tree removal.

MBA

GOSR has determined that the project would have no significant adverse impact on migratory birds or their habitat, since no trees would be removed. It is anticipated that passerine birds would temporarily leave the area during construction due to noise and disturbance. Extensive areas of high quality woodland habitat are available Montgomery County (see **Figure 1**).

BGEPA

The IPaC review process identified the bald eagle as having year-round habitat in Montgomery County that may be potentially affected by activities in the project area. GOSR has determined that the proposed project would have no significant adverse impact on bald eagles. The project area is not located within the vicinity of documented bald eagle breeding. As with other migratory birds, foraging bald eagles may temporarily avoid the area during construction due to noise and disturbance.

Conclusions

The proposed project would not jeopardize the continued existence of ESA species or destroy or adversely modify their critical habitat. On this basis, GOSR has determined that the proposed action would have **No Effect** on the NLEB and would have no significant adverse impact on migratory birds or bald eagles. We request your concurrence with this determination. Additionally, we request to be alerted if USFWS becomes aware of a Bald or Golden Eagle nest within 660 feet of the culvert locations (see **Figure 1**).

GOSR is submitting the above information to request acknowledgement from USFWS that they have no objections to the determination made by GOSR that the proposed project would have **No Effect** on ESA species under USFWS jurisdiction. If USFWS does not respond within 30 days from submittal of this letter, then GOSR may presume that its determination for each project is informed by the best available information and its project responsibilities under Section 7 of the ESA have been fulfilled. GOSR understands that the USFWS presumes that all activities will be implemented as described herein. GOSR will promptly report any departures from the described activities to the New York Field Office.

If you have questions or require additional information regarding this request, please contact me at (518) 474-0647 or Alicia.Shultz@nyshcr.org. Thank you for your time and consideration.

Sincerely,

Alicia Shultz
Senior Environmental Scientist
Governor's Office of Storm Recovery
NYS Homes and Community Renewal

Attachments:
Figure 1
Figure 2
Preliminary Site Plans
USFWS Official Species List
New York Natural Heritage Program Review

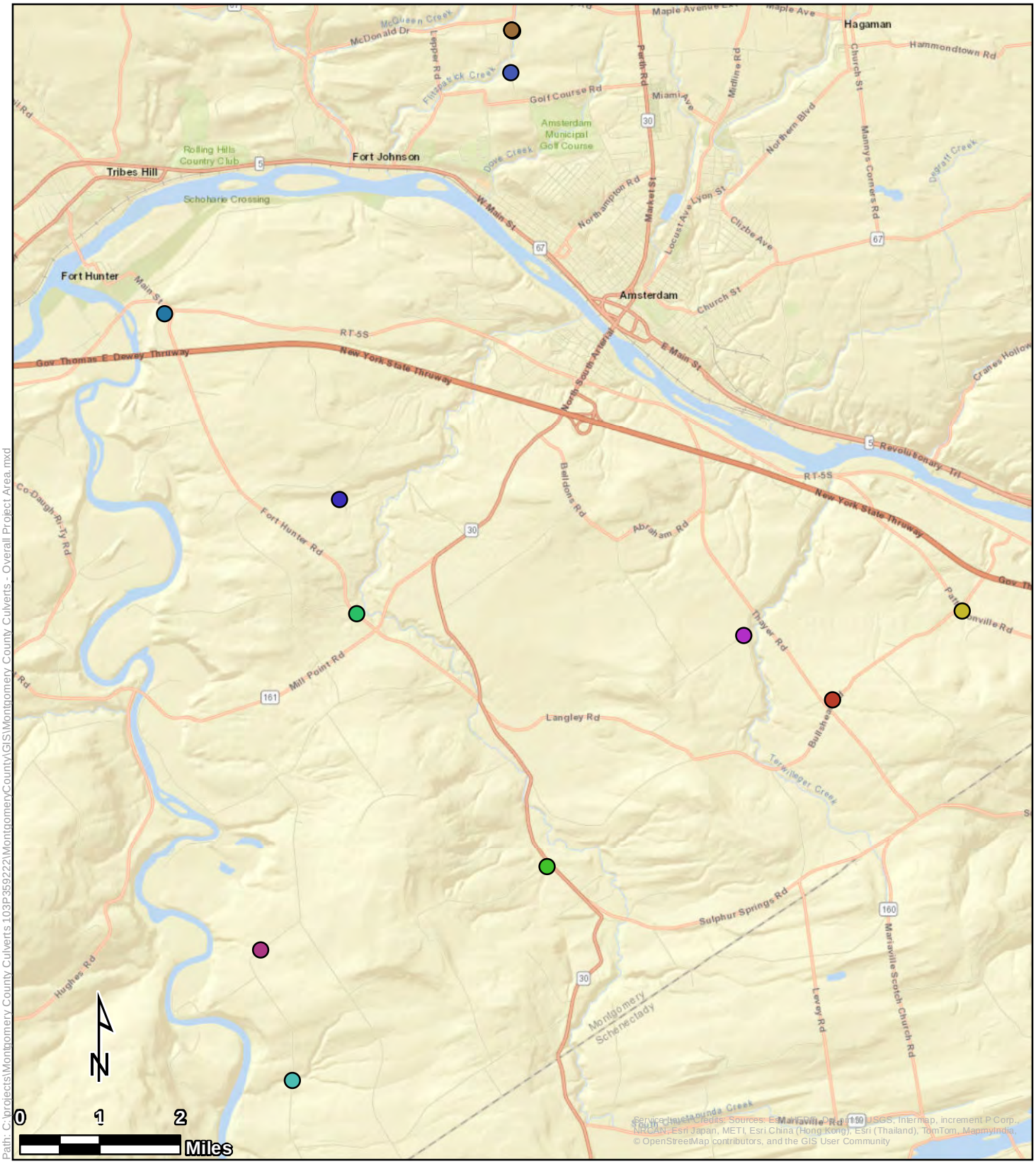

Legend

Culvert Locations

- Bullshead Road
- Fort Hunter Road
- Hartley Road
- Langley Road
- McKay Road 1
- McKay Road 2
- McKinney Road 4A
- McKinney Road 4B
- Pattersonville Road
- Shellstone Road
- Strevy Lane

Project Location Map

Montgomery County Culverts
Bullshead Road, Fort Hunter Road, Hartley Road, Langley Road, McKay Road, McKinney Road, Pattersonville Road, Shellstone Road, and Strevy Lane
Montgomery County, New York

Figure 1

Tetra Tech, Inc

Path: C:\projects\Montgomery County Culverts 109P359222\MontgomeryCounty\GIS\Montgomery County Culverts - Topographic Map.mxd

Legend

Culvert Locations

- Bullshead Road
- Fort Hunter Road
- Hartley Road
- Langley Road
- McKay Road 1
- McKay Road 2
- McKinney Road 4A
- McKinney Road 4B
- Pattersonville Road
- Shellstone Road
- Strevy Lane

Topographic Map

Montgomery County Culverts
Bullshead Road, Fort Hunter Road, Hartley Road, Langley Road, McKay Road, McKinney Road, Pattersonville Road, Shellstone Road, and Strevy Lane
Montgomery County, New York

Tetra Tech, Inc

Figure 2

MONTGOMERY COUNTY
CULVERT REPLACEMENT

CONTRACT NO. 3 - TOWN OF AMSTERDAM CULVERT REPLACEMENT
CONTRACT NO. 4 - TOWN OF FLORIDA CULVERT REPLACEMENT

COUNTY LEGISLATURE

Matthew L. Ossenfort	County Executive
Martin P. Kelly	Legislator District 1
Thomas L. Quackenbush	Legislator District 2
Roy S. Dimond	Legislator District 3
Ryan B. Weitz	Legislator District 4
Terry A. Bieniek	Legislator District 5
John M. Duchessi	Legislator District 6
Barbara S. Wheeler	Legislator District 7
Joseph M. Isabel	Legislator District 8
Robert A. Purtell	Legislator District 9
Bart A. Tessiero	Town of Amsterdam Highway Superintendent
William Weller	Town of Florida Highway Superintendent
Paul Clayburn	Commissioner of Public Works
Cheryl A. Reese	Clerk of the Legislature

JME
John M. McDonald Engineering
a member of PRIME Group®

New York Office
7 South Church Street Schenectady, New York 12305
Ph: 518 382 1774 Fax: 518 382 1776
www.mcdonaldengineers.com www.primeeng.com

LICENSED PROFESSIONAL ENGINEER
JOHN M. McDONALD
NO. 54506
STATE OF NEW YORK

Draft

REF. NO. 134-1601-000

Review Issue: October 2016

PROJECT NO. 134-1601

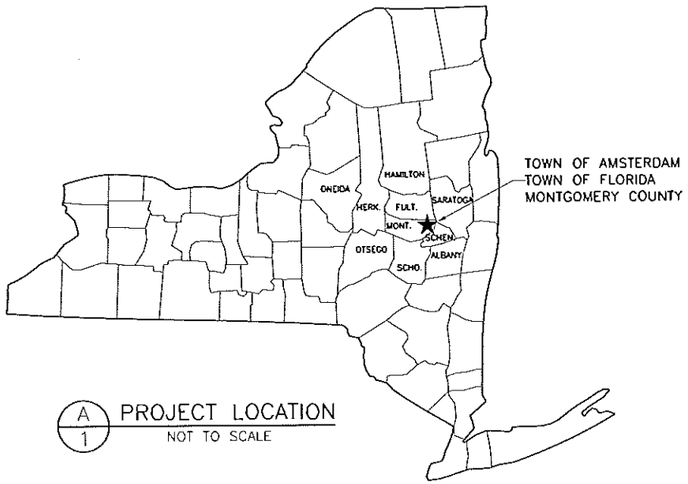

A/1 PROJECT LOCATION
NOT TO SCALE

DRAWING INDEX

SHEET #	TITLE	REFERENCE NO.	REV. NO.
	CONTRACT NO. 3 – TOWN OF AMSTERDAM CULVERT REPLACEMENT		
	CONTRACT NO. 4 – TOWN OF FLORIDA CULVERT REPLACEMENT		
	GENERAL		
1	COVER	134-1601-000	00
2	INDEX & PROJECT LOCATION	134-1601-010	00
3	CULVERT LOCATION MAP	134-1601-020	00
4	EROSION CONTROL DETAILS	134-1601-030	00
	SECTION A – TOWN OF AMSTERDAM		
A1	MCKAY ROAD 1 SITE PLAN	134-1601-100	00
A2	MCKAY ROAD 1 PROFILES	134-1601-110	00
A3	MCKAY ROAD 1 CROSS SECTIONS	134-1601-120	00
A4	MCKAY ROAD 2 SITE PLAN	134-1601-130	00
A5	MCKAY ROAD 2 PROFILE	134-1601-140	00
A6	MCKAY ROAD 2 CROSS SECTIONS	134-1601-150	00
	SECTION B – TOWN OF FLORIDA		
B1	BULLSHEAD ROAD SITE PLAN	134-1601-200	00
B2	BULLSHEAD ROAD PROFILE	134-1601-203	00
B3	BULLSHEAD ROAD CROSS SECTIONS	134-1601-206	00
B4	FORT HUNTER ROAD SITE PLAN	134-1601-210	00
B5	FORT HUNTER ROAD PROFILE	134-1601-213	00
B6	FORT HUNTER ROAD CROSS SECTIONS	134-1601-216	00
B7	HARTLEY ROAD SITE PLAN	134-1601-220	00
B8	HARTLEY ROAD PROFILE	134-1601-223	00
B9	HARTLEY ROAD CROSS SECTIONS	134-1601-226	00
B10	LANGLEY ROAD SITE PLAN	134-1601-230	00
B11	LANGLEY ROAD PROFILE	134-1601-233	00
B12	LANGLEY ROAD CROSS SECTIONS	134-1601-236	00
B13	MCKINNEY ROAD 4A SITE PLAN	134-1601-240	00
B14	MCKINNEY ROAD 4A PROFILE	134-1601-243	00
B15	MCKINNEY ROAD 4A CROSS SECTIONS	134-1601-246	00
B16	MCKINNEY ROAD 4B SITE PLAN	134-1601-250	00
B17	MCKINNEY ROAD 4B PROFILE	134-1601-253	00
B18	MCKINNEY ROAD 4B CROSS SECTIONS	134-1601-256	00
B19	PATTERSONVILLE ROAD SITE PLAN	134-1601-260	00
B20	PATTERSONVILLE ROAD PROFILE	134-1601-263	00
B21	PATTERSONVILLE ROAD CROSS SECTIONS	134-1601-266	00
B22	SHELLSTONE ROAD SITE PLAN	134-1601-270	00
B23	SHELLSTONE ROAD PROFILE	134-1601-273	00
B24	SHELLSTONE ROAD CROSS SECTIONS	134-1601-276	00
B25	STREVY LANE SITE PLAN	134-1601-280	00
B26	STREVY LANE PROFILE	134-1601-283	00
B27	STREVY LANE CROSS SECTIONS	134-1601-286	00
	SECTION C – DETAILS		
C1	CONCRETE DETAILS	134-1601-300	00
C2	PAVING DETAILS	134-1601-310	00

GENERAL CONTRACT DRAWING NOTES:

1. PROJECT SITE PLANS ARE BASED ON SURVEYS BY JOHN M. MCDONALD ENGINEERING.

2. CONTRACTOR MUST COORDINATE WORK WITH MONTGOMERY COUNTY DPW AND MINIMIZE INCONVENIENCES.

3. CONTRACTOR SHALL BE RESPONSIBLE FOR REPAIR OF ANY DAMAGE TO THE FACILITIES AND APPURTENANCES RESULTING FROM THE CONTRACTOR'S WORK AT NO COST TO OWNER.

4. ALL PRECAUTIONS SHALL BE TAKEN TO PROTECT THE ENVIRONMENT IN ACCORDANCE WITH STATE, FEDERAL AND LOCAL REGULATIONS AND AS SPECIFIED IN THE CONTRACT DOCUMENTS.

5. CONTRACTOR SHALL CONTACT DIG SAFELY NEW YORK PRIOR TO COMMENCING WORK TO DETERMINE LOCATIONS OF UNDERGROUND UTILITIES. EXISTING UTILITIES ARE SHOWN IN THEIR RELATIVE POSITIONS AND ARE FOR INFORMATION ONLY. CONTRACTOR SHALL BE RESPONSIBLE FOR REPAIR OF ANY DAMAGE TO FACILITIES RESULTING FROM THE CONTRACTORS WORK AT NO COST TO OWNER.

6. CONTRACTOR SHALL RESTORE ALL LAWNS, DRIVEWAYS, ROADS, SHOULDERS, FENCES ETC. TO A CONDITION AT LEAST AS GOOD AS THEY WERE PRIOR TO CONSTRUCTION. DAMAGE SHALL BE REPAIRED AT CONTRACTOR'S EXPENSE.

7. NO WORK, STORAGE OR TRESPASS SHALL BE PERMITTED BEYOND THE BOUNDARIES OF OWNER'S EASEMENTS OR PROPERTY.

8. CONTRACTOR IS RESPONSIBLE FOR ALL TRAFFIC CONTROL, DUST CONTROL, AND PROTECTION OF PUBLIC FROM HAZARDS ASSOCIATED WITH THIS WORK DURING WORKING AND NON-WORKING HOURS.

9. CONTRACTOR SHALL SUPPORT ALL UTILITIES & STRUCTURES WHERE NECESSARY DUE TO WORK OF THIS CONTRACT.

10. EXTENT OF WORK IS INDICATED ON CONTRACT DRAWINGS AND SPECIFICATIONS. EACH CONTRACTOR IS RESPONSIBLE TO REVIEW EXTENT OF WORK BY OTHERS AND COORDINATE THEIR OWN WORK WITH WORK BY OTHER CONTRACTORS.

NO.	DATE	REVISION	BY
00	10/2016	ORIGINAL ISSUE	ATB

JME
John M. McDonald Engineering, P.C.
a member of PRIME Group
New York Office
7 South Church Street Schenectady, New York 12305
Ph: 518 382 1774 Fax: 518 382 1776
www.mcdonaldengineers.com www.primeeng.com

PROJ. ENGR.: ATB | DRAWN BY: BSN | CHECKED BY: JMM

JOHN M. MCDONALD LICENSED PROFESSIONAL ENGINEER NO. 54306 STATE OF NEW YORK

UNAUTHORIZED ALTERATIONS TO THIS DOCUMENT IS A VIOLATION OF SECTION 7209 SUBDIVISION 2 OF NEW YORK STATE EDUCATION LAW

MONTGOMERY COUNTY

CULVERT REPLACEMENT

CONTRACT NO. 3 - TOWN OF AMSTERDAM CULVERT REPLACEMENT
CONTRACT NO. 4 - TOWN OF FLORIOA CULVERT REPLACEMENT

SHEET TITLE:

INDEX & PROJECT LOCATION

SCALE: AS SHOWN

FILE NO.: 134-1601-010

DATE: OCTOBER 2016

SHEET NO.: 2

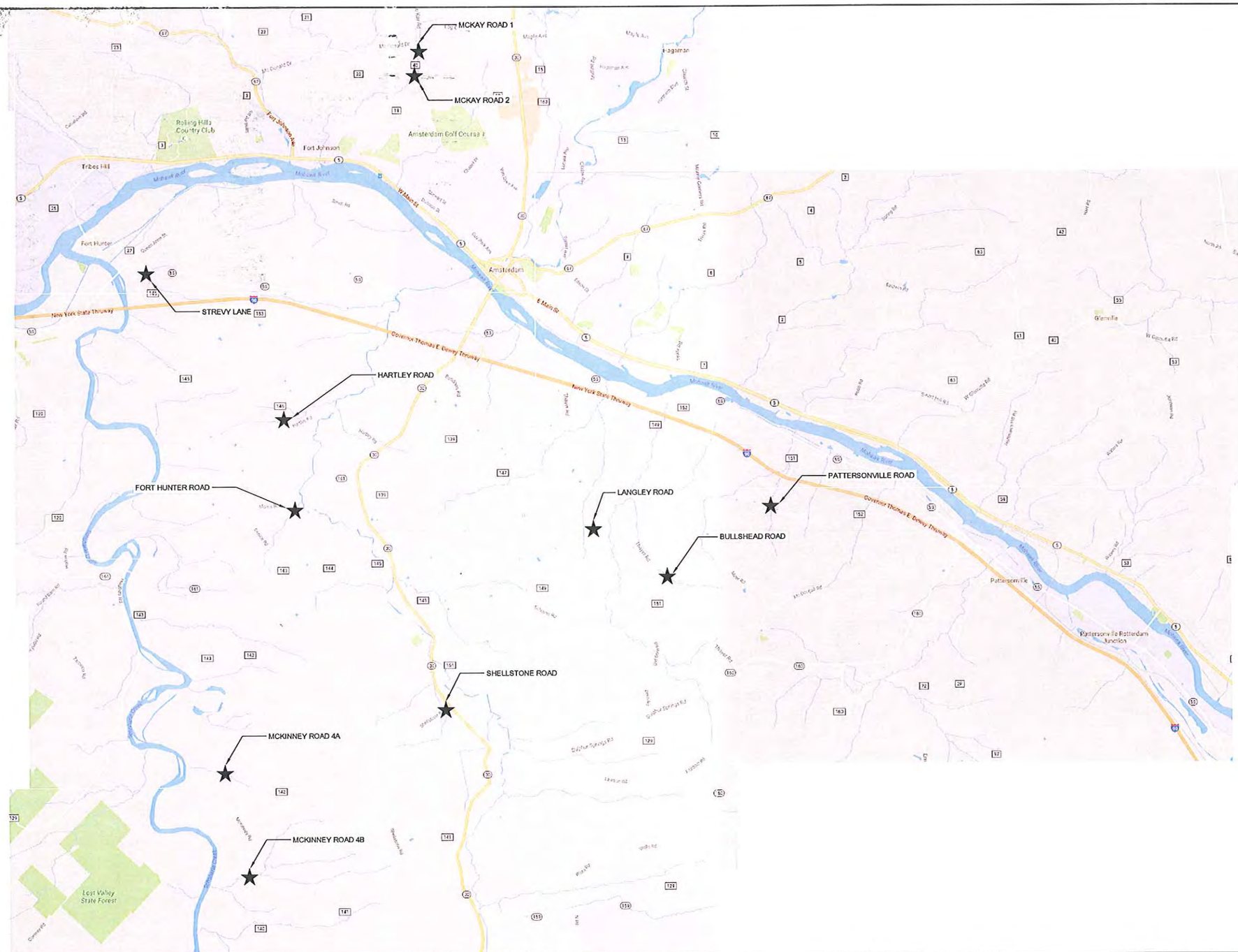

NO.	DATE	REVISION	BY
00	10/2016	ORIGINAL ISSUE	ATB

JME
John M. McDonald Engineering
a member of PRIME Group®

New York Office
7 South Church Street Schenectady, New York 12305
Ph: 518 382 1774 Fax: 518 382 1776
www.mcdonaldengineers.com www.primeeng.com

PROJ. ENGR.: ATB | DRAWN BY: BSN | CHECKED BY: JMM

JOHN M. McDONALD PROFESSIONAL ENGINEER LICENSE NO. 54508 STATE OF NEW YORK

UNAUTHORIZED ALTERATIONS TO THIS DOCUMENT IS A VIOLATION OF SECTION 7209 SUBDIVISION 2 OF NEW YORK STATE EDUCATION LAW

MONTGOMERY COUNTY

CULVERT REPLACEMENT

CONTRACT NO. 3 - TOWN OF AMSTERDAM CULVERT REPLACEMENT
CONTRACT NO. 4 - TOWN OF FLORIDA CULVERT REPLACEMENT

SHEET TITLE:

CULVERT LOCATION MAP

SCALE: AS SHOWN

FILE NO.: 134-1601

DATE: OCTOBER 2016

SHEET NO.: 3

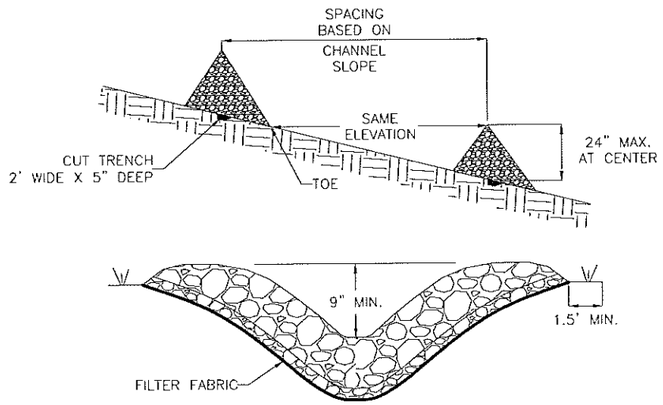

A/4 CHECK DAM DETAILS

NOT TO SCALE

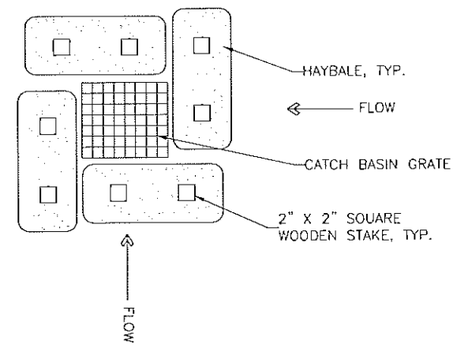

B/4 STRUCTURE EROSION CONTROL

NOT TO SCALE

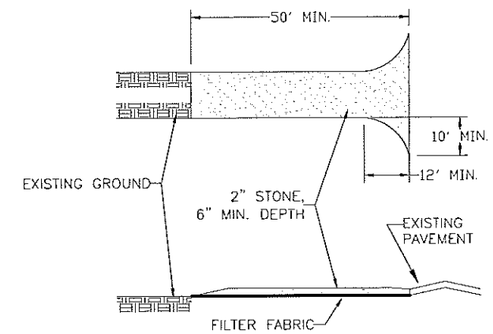

C/4 STABILIZED CONSTRUCTION ENTRANCE

NOT TO SCALE

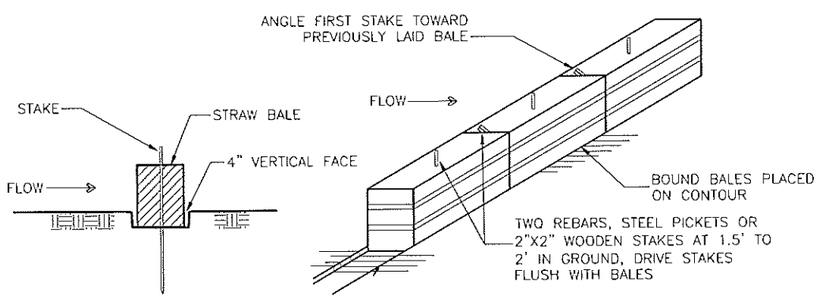

D/4 STRAW BALE DETAILS

NOT TO SCALE

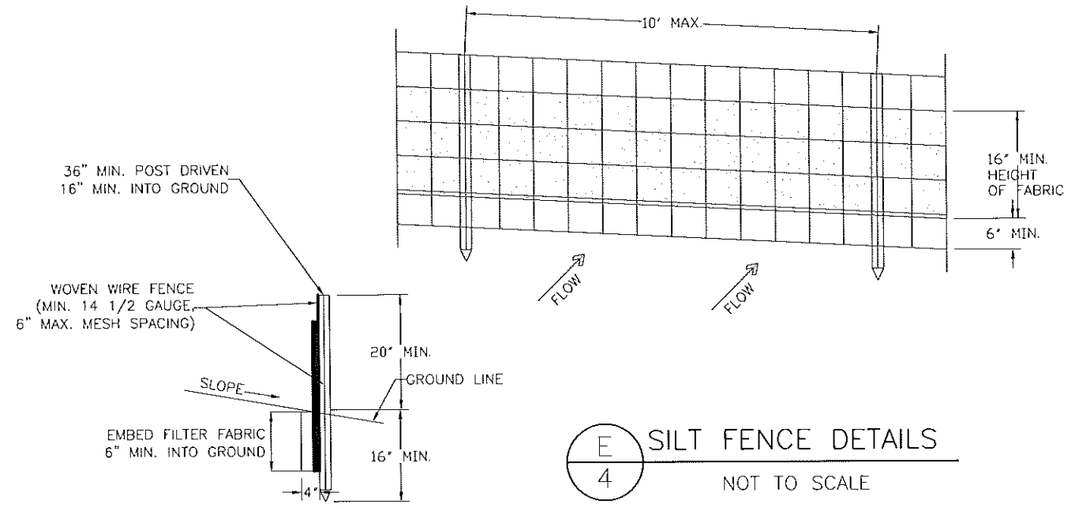

E/4 SILT FENCE DETAILS

NOT TO SCALE

SOIL EROSION AND STABILIZATION

1. DRAINAGE AREA NO MORE THAN 1/4 ACRE PER 100' OF STRAW BALE DIKE FOR SLOPES LESS THAN 25%.
2. BALES SHALL BE PLACED AT THE TOE OF SLOPE OR ON THE CONTOUR AND IN A ROW WITH ENDS TIGHTLY ABUTTING THE ADJACENT BALES.
3. EACH BALE SHALL BE EMBEDDED IN THE SOIL A MINIMUM OF 4 INCHES, AND PLACED SO THE BINDINGS ARE HORIZONTAL.
4. BALES SHALL BE SECURELY ANCHORED IN PLACE BY EITHER TWO STAKES OR RE-BARS DRIVENTHROUGH THE BALE. THE FIRST STAKE IN EACH BALE SHALL BE DRIVEN TOWARD THE PREVIOUSLY LAID BALE AT AN ANGLE TO FORCE THE BALES TOGETHER. STAKES SHALL BE DRIVEN FLUSH WITH THE BALE.
5. INSPECTION SHALL BE FREQUENT AND REPAIR REPLACEMENT SHALL BE MADE PROMPTLY AS NEEDED.
6. BALES SHALL BE REMOVED WHEN THEY HAVE SERVED THEIR USEFULNESS SO AS NOT TO BLOCK OR IMPEDE STORM FLOW OR DRAINAGE.

NO.	DATE	REVISION	BY
00	10/2016	ORIGINAL ISSUE	ATB

JME JOHN M. MCDONALD ENGINEERING, P.C.
7 South Church Street Schenectady, New York 12305
Ph: 518 382 1774 Fax: 518 382 1776 www.mcdonaldengineers.com

PROJ. ENGR.: ATB | DRAWN BY: BSN | CHECKED BY: JMM

UNAUTHORIZED ALTERATIONS TO THIS DOCUMENT IS A VIOLATION OF SECTION 7209 SUBDIVISION 2 OF NEW YORK STATE EDUCATION LAW

MONTGOMERY COUNTY

CULVERT REPLACEMENT

CONTRACT NO. 3 - TOWN OF AMSTERDAM CULVERT REPLACEMENT
CONTRACT NO. 4 - TOWN OF FLORIDA CULVERT REPLACEMENT

SHEET TITLE:

EROSION CONTROL DETAILS

SCALE: AS SHOWN

FILE NO.: 134-1601-030

DATE: OCTOBER 2016

SHEET NO.: 4

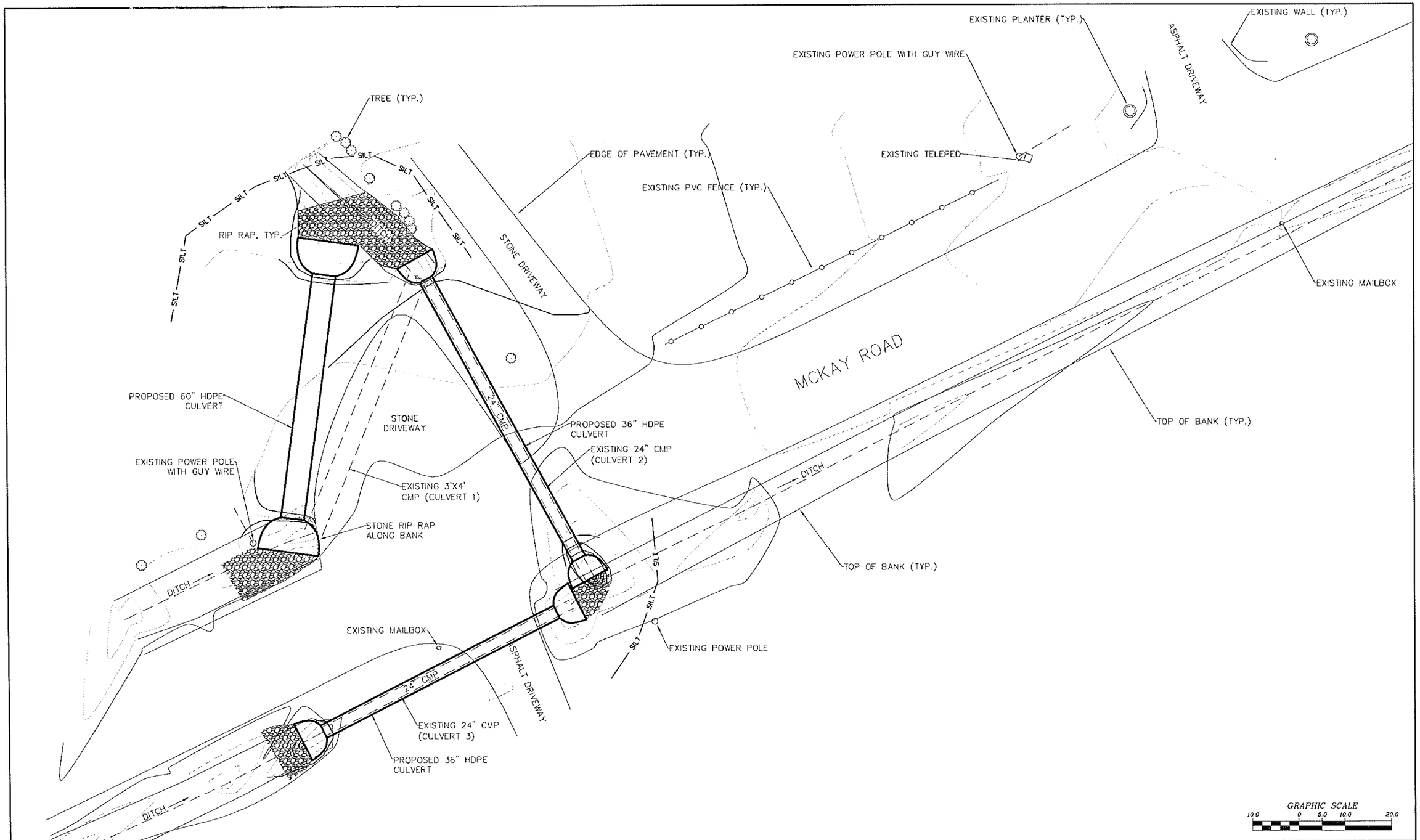

NO.	DATE	REVISION	BY
00	10/2016	ORIGINAL ISSUE	DPC

JME
John M. McDonald Engineering, P.C.
a member of PRIME Group®

New York Office
7 South Church Street Schenectady, New York 12305
Ph: 518 382 1774 Fax: 518 382 1776
www.mcdonaldengineers.com www.primeeng.com

PROJ. ENGR.: DPC | DRAWN BY: BSN | CHECKED BY: JMM

UNAUTHORIZED ALTERATIONS TO THIS DOCUMENT IS A VIOLATION OF SECTION 7209 SUBDIVISION 2 OF NEW YORK STATE EDUCATION LAW

MONTGOMERY COUNTY

CULVERT REPLACEMENT

CONTRACT NO. 3 - TOWN OF AMSTERDAM CULVERT REPLACEMENT
CONTRACT NO. 4 - TOWN OF FLORIDA CULVERT REPLACEMENT

SHEET TITLE:

MCKAY ROAD 1
SITE PLAN

SCALE: AS SHOWN

FILE NO.: 134-1601-100

DATE: OCTOBER 2016

SHEET NO.: A1

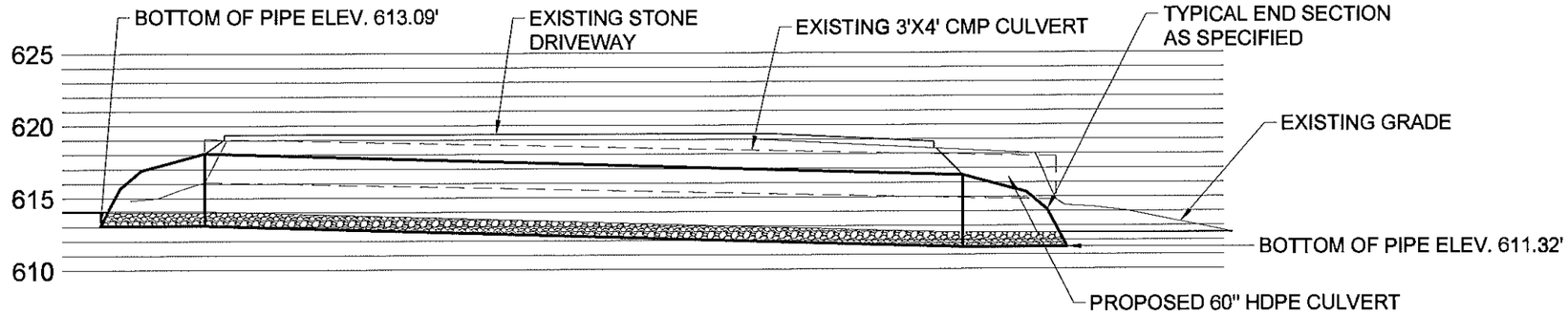

A / A2 MCKAY ROAD 1 CULVERT 1 PROFILE

GRAPHIC SCALE 5.0 0 2.5 5.0 10.0

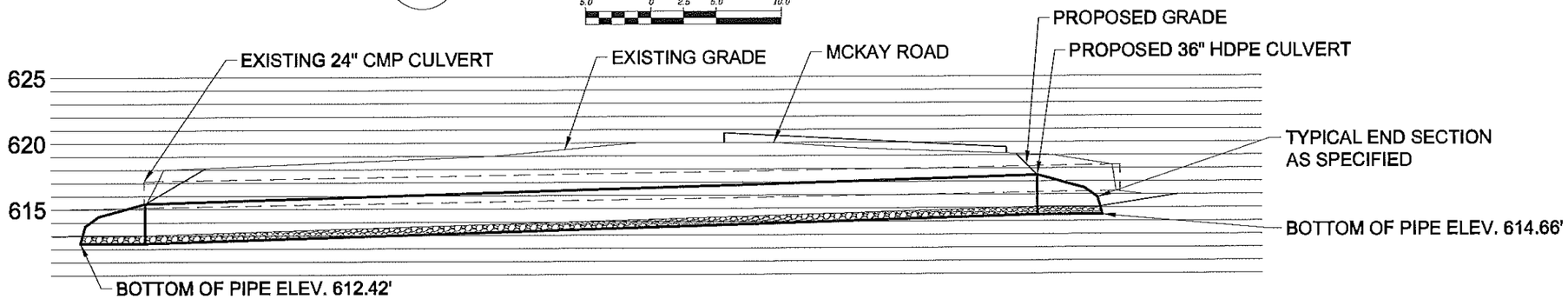

B / A2 MCKAY ROAD 1 CULVERT 2 PROFILE

GRAPHIC SCALE 5.0 0 2.5 5.0 10.0

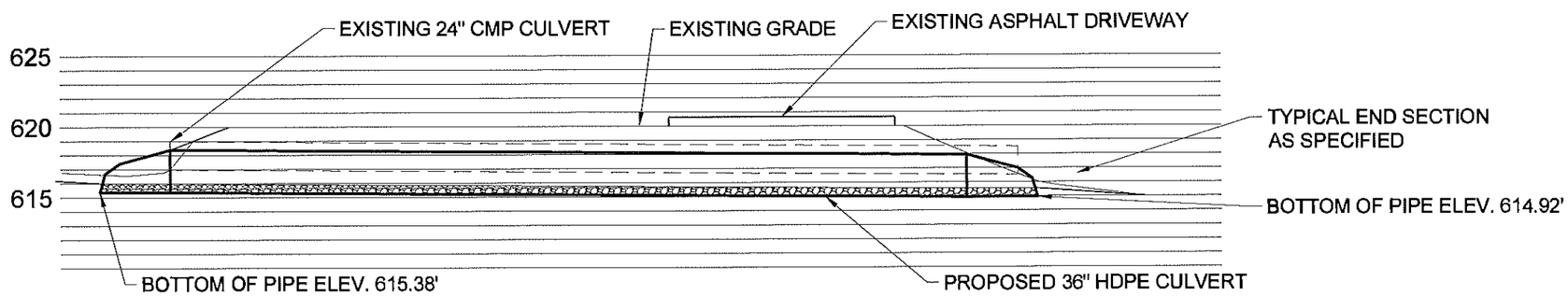

C / A2 MCKAY ROAD 1 CULVERT 3 PROFILE

GRAPHIC SCALE 5.0 0 2.5 5.0 10.0

NO.	DATE	REVISION	BY
00	10/2016	ORIGINAL ISSUE	DPC

JME
John M. McDonald Engineering, P.C.
a member of PRITER Group®
New York Office
7 South Church Street Schenectady, New York 12305
Ph: 518 382 1774 Fax: 518 382 1776
www.mcdonaldengineers.com www.priteeng.com
PROJ. ENGR.: DPC | DRAWN BY: BSN | CHECKED BY: JMM

UNAUTHORIZED ALTERATIONS TO THIS DOCUMENT IS A VIOLATION OF SECTION 7209 SUBDIVISION 2 OF NEW YORK STATE EDUCATION LAW

MONTGOMERY COUNTY

CULVERT REPLACEMENT

CONTRACT NO. 3 - TOWN OF AMSTERDAM CULVERT REPLACEMENT
CONTRACT NO. 4 - TOWN OF FLORIDA CULVERT REPLACEMENT

SHEET TITLE:

MCKAY ROAD 1 PROFILES

SCALE: AS SHOWN

FILE NO.: 134-1601-110

DATE: OCTOBER 2016

SHEET NO.: A2

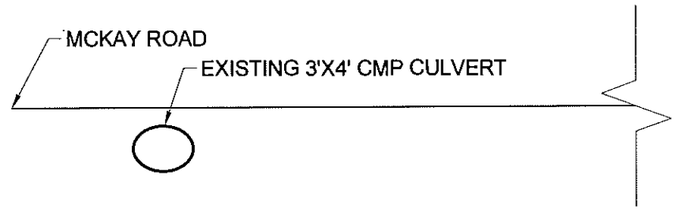

A / A3 EXISTING CULVERT 1 CROSS SECTION

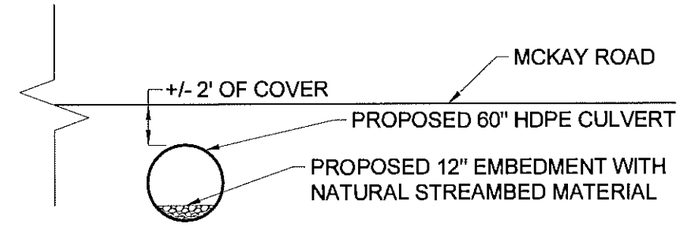

B / A3 PROPOSED CULVERT 1 CROSS SECTION

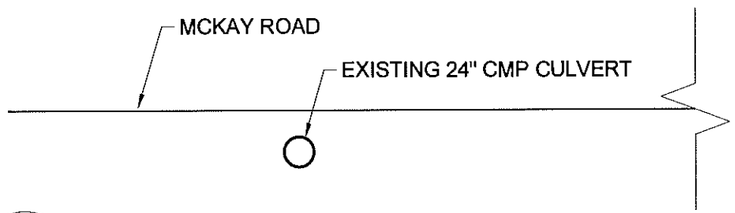

C / A3 EXISTING CULVERT 2 CROSS SECTION

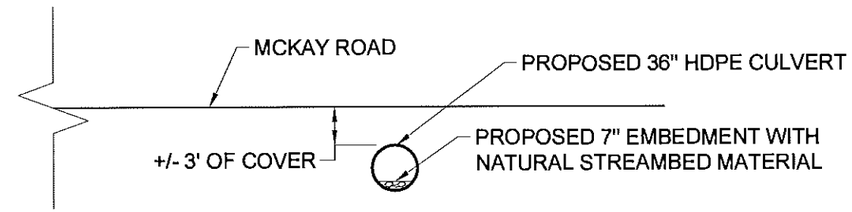

D / A3 PROPOSED CULVERT 2 CROSS SECTION

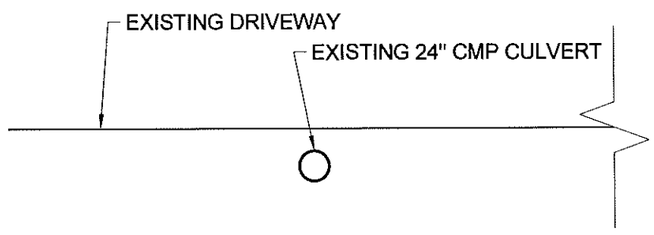

E / A3 EXISTING CULVERT 3 CROSS SECTION

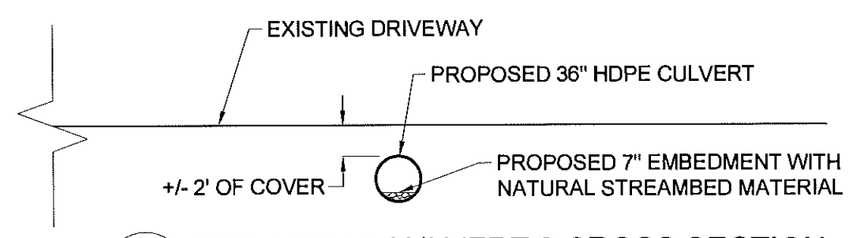

F / A3 PROPOSED CULVERT 3 CROSS SECTION

NO.	DATE	REVISION	BY
00	10/2016	ORIGINAL ISSUE	DPC

JME
John M. McDonald Engineering, P.C.
a member of PRIME Group®
New York Office
7 South Church Street Schenectady, New York 12305
Ph: 518 382 1774 Fax: 518 382 1776
www.mcdonaldengineers.com www.primeeng.com

PROJ. ENGR.: DPC | DRAWN BY: BSN | CHECKED BY: JMM

UNAUTHORIZED ALTERATIONS TO THIS DOCUMENT IS A VIOLATION OF SECTION 7209 SUBDIVISION 2 OF NEW YORK STATE EDUCATION LAW

MONTGOMERY COUNTY

CULVERT REPLACEMENT

CONTRACT NO. 3 - TOWN OF AMSTERDAM CULVERT REPLACEMENT
CONTRACT NO. 4 - TOWN OF FLORIDA CULVERT REPLACEMENT

SHEET TITLE:

MCKAY ROAD 1 CROSS SECTIONS

SCALE: AS SHOWN
FILE NO.: 134-1601
DATE: OCTOBER 2016
SHEET NO.: A3

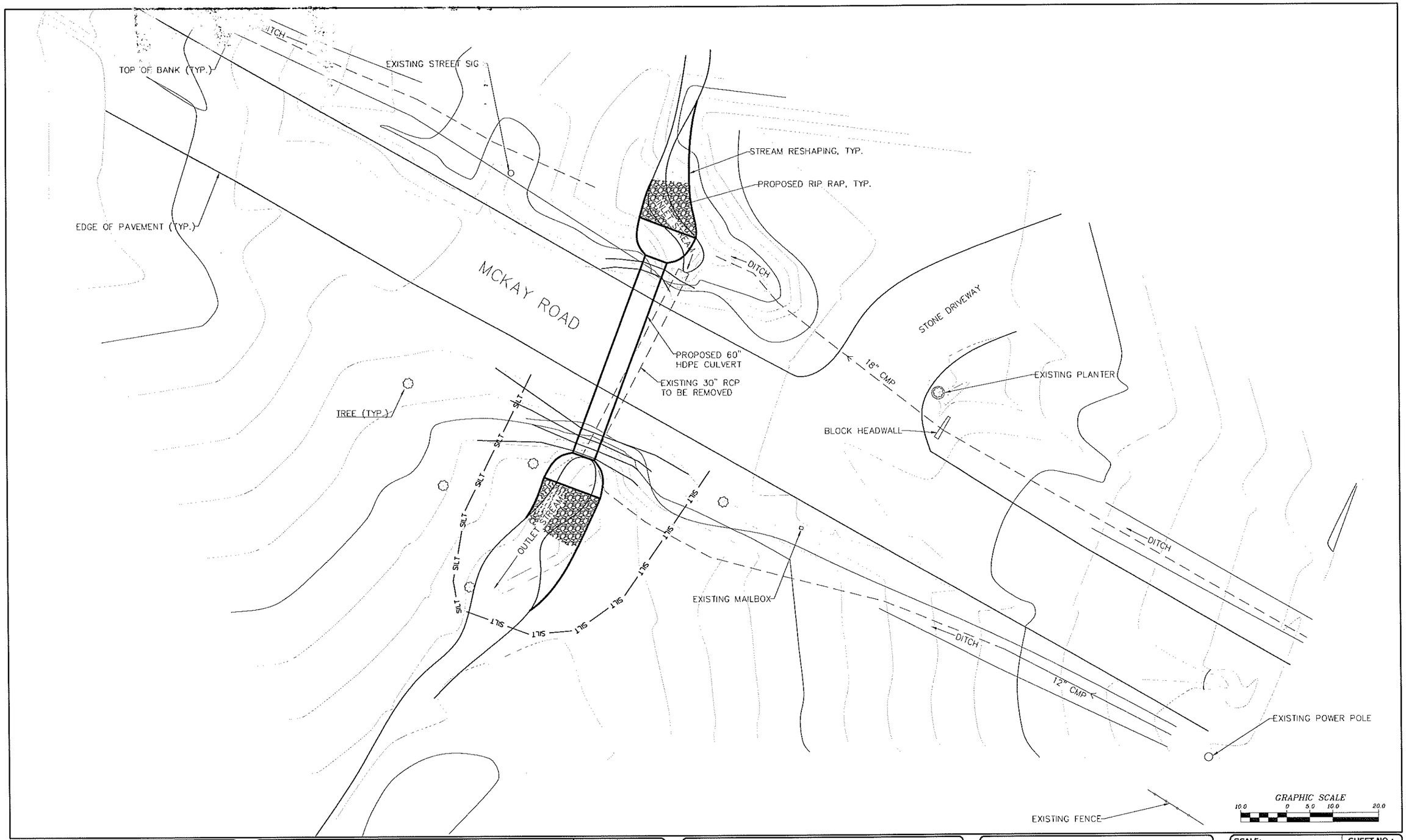

NO.	DATE	REVISION	BY
00	10/2016	ORIGINAL ISSUE	ATB

JME
John M. McDonald Engineering, P.C.
a member of PRIME Group
New York Office
7 South Church Street Schenectady, New York 12305
Ph: 518 382 1774 Fax: 518 382 1776
www.mcdonaldengineers.com www.primeeng.com

PROJ. ENGR.: ATB | DRAWN BY: BSN | CHECKED BY: JMM

LICENSED PROFESSIONAL ENGINEER JOHN M. McDONALD NO. 54566 STATE OF NEW YORK

UNAUTHORIZED ALTERATIONS TO THIS DOCUMENT IS A VIOLATION OF SECTION 7209 SUBDIVISION 2 OF NEW YORK STATE EDUCATION LAW

MONTGOMERY COUNTY

CULVERT REPLACEMENT

CONTRACT NO. 3 - TOWN OF AMSTERDAM CULVERT REPLACEMENT
CONTRACT NO. 4 - TOWN OF FLORIDA CULVERT REPLACEMENT

SHEET TITLE:

MCKAY ROAD 2
SITE PLAN

SCALE: AS SHOWN

FILE NO.: 134-1601-130

DATE: OCTOBER 2016

SHEET NO.: A4

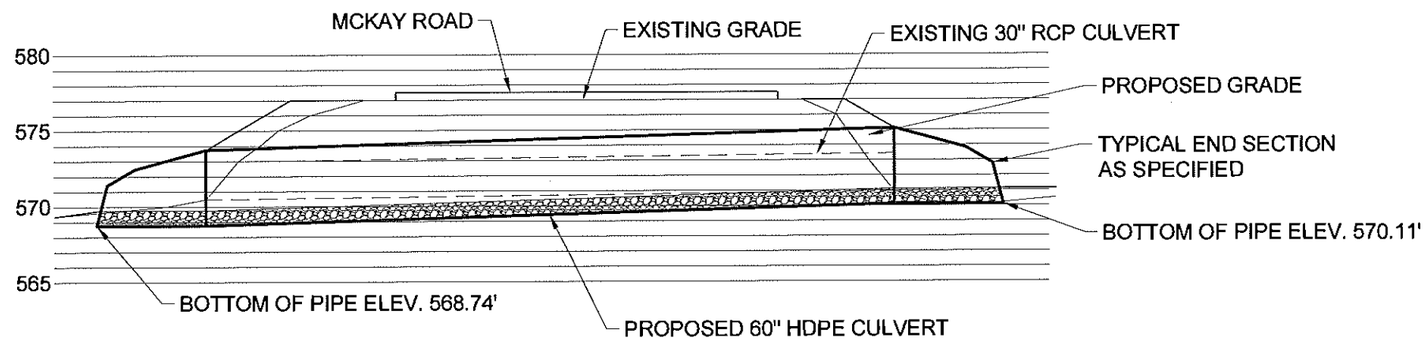

A
A5

MCKAY ROAD 2 PROFILE

GRAPHIC SCALE
5.0 0 2.5 5.0 10.0

NO.	DATE	REVISION	BY
00	10/2016	ORIGINAL ISSUE	ATB

JME
John M. McDonald Engineering, P.C.
a member of PRIME Group®
New York Office
7 South Church Street Schenectady, New York 12305
Ph: 518 382 1774 Fax: 518 382 1776
www.mcdonaldengineers.com www.primeeng.com

PROJ. ENGR.: ATB | DRAWN BY: BSN | CHECKED BY: JMM

UNAUTHORIZED ALTERATIONS TO THIS DOCUMENT IS A VIOLATION OF SECTION 7209 SUBDIVISION 2 OF NEW YORK STATE EDUCATION LAW

MONTGOMERY COUNTY

CULVERT REPLACEMENT

CONTRACT NO. 3 - TOWN OF AMSTERDAM CULVERT REPLACEMENT
CONTRACT NO. 4 - TOWN OF FLORIDA CULVERT REPLACEMENT

SHEET TITLE:
MCKAY ROAD PROFILE

SCALE: AS SHOWN
FILE NO.: 134-1601-140
DATE: OCTOBER 2016
SHEET NO.: A5

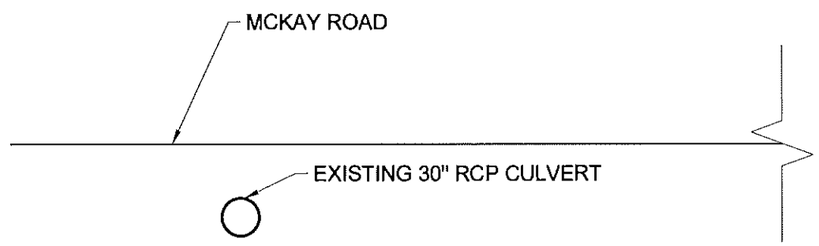

A / A6 EXISTING CROSS SECTION

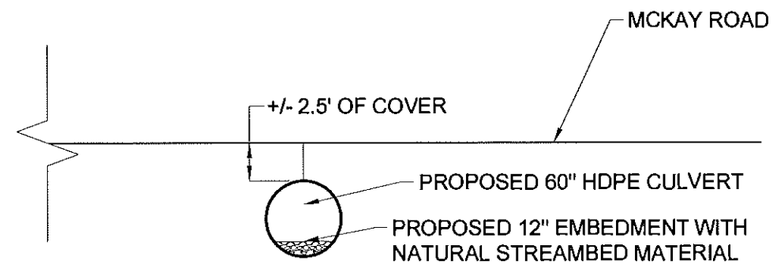

B / A6 PROPOSED CROSS SECTION

NO.	DATE	REVISION	BY
00	10/2016	ORIGINAL ISSUE	ATB

JME
John M. McDonald Engineering, P.C.
a member of PRIME Group
New York Office
7 South Church Street Schenectady, New York 12305
Ph: 518 382 1774 Fax: 518 382 1776
www.mcdonaldengineers.com www.primeeng.com

PROJ. ENGR.: ATB | DRAWN BY: BSN | CHECKED BY: JMM

UNAUTHORIZED ALTERATIONS TO THIS DOCUMENT IS A VIOLATION OF SECTION 7209 SUBDIVISION 2 OF NEW YORK STATE EDUCATION LAW

MONTGOMERY COUNTY

CULVERT REPLACEMENT

CONTRACT NO. 3 - TOWN OF AMSTERDAM CULVERT REPLACEMENT
CONTRACT NO. 4 - TOWN OF FLORIDA CULVERT REPLACEMENT

SHEET TITLE:

MCKAY ROAD CROSS SECTIONS

SCALE: AS SHOWN
FILE NO.: 134-1601-150
DATE: OCTOBER 2016
SHEET NO.: A6

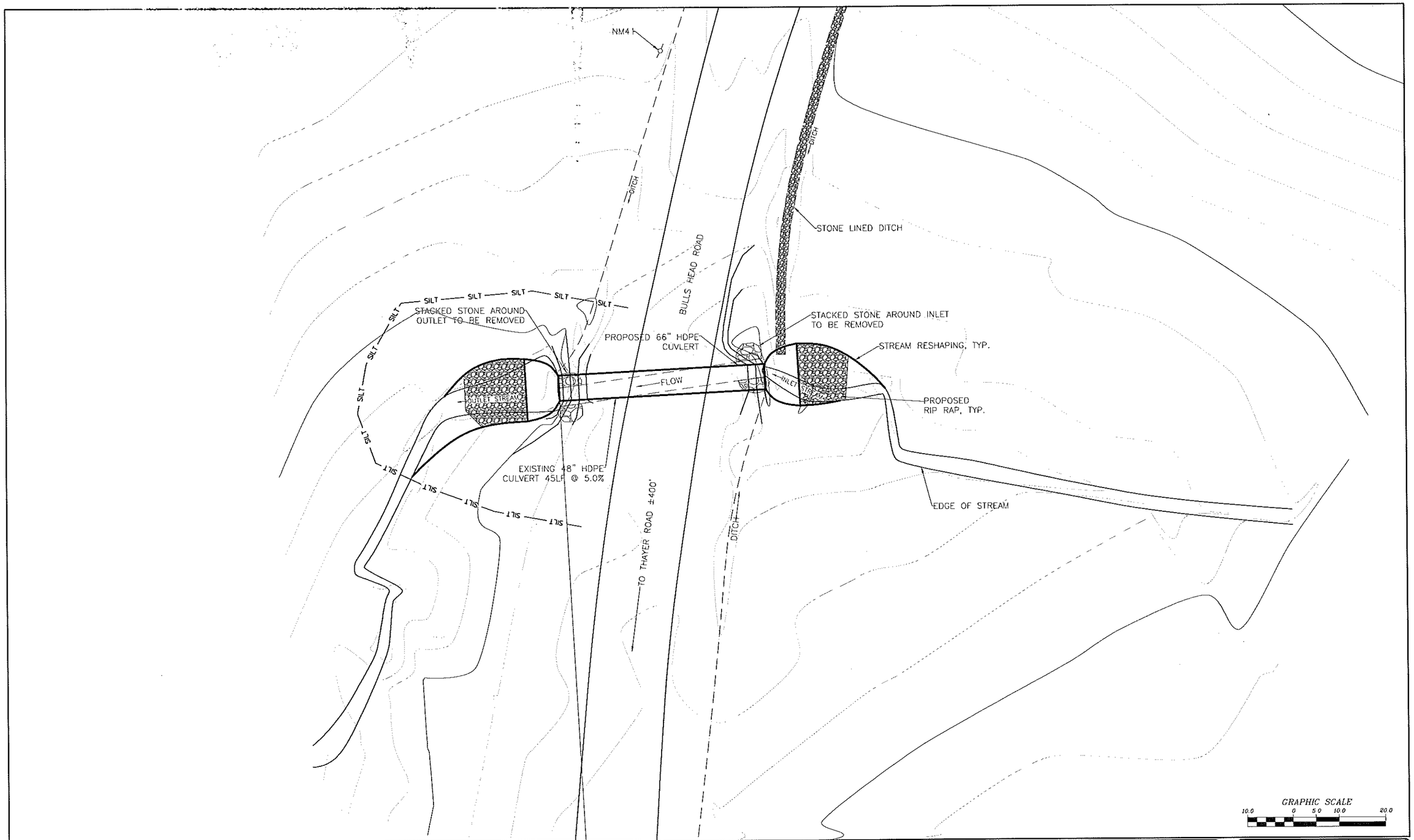

NO.	DATE	REVISION	BY
00	10/2016	ORIGINAL ISSUE	ATB

JME
John M. McDonald Engineering
a member of PRIME Group

New York Office
7 South Church Street Schenectady, New York 12305
Ph: 518 382 1774 Fax: 518 382 1776
www.mcdonaldengineers.com www.primeeng.com

PROJ. ENGR.: ATB | DRAWN BY: BSN | CHECKED BY: JMM

LICENSED PROFESSIONAL ENGINEER JOHN M. McDONALD NO. 54558 STATE OF NEW YORK

UNAUTHORIZED ALTERATIONS TO THIS DOCUMENT IS A VIOLATION OF SECTION 7209 SUBDIVISION 2 OF NEW YORK STATE EDUCATION LAW

MONTGOMERY COUNTY

CULVERT REPLACEMENT

CONTRACT NO. 3 - TOWN OF AMSTERDAM CULVERT REPLACEMENT
CONTRACT NO. 4 - TOWN OF FLORIDA CULVERT REPLACEMENT

SHEET TITLE:

BULLSHEAD ROAD
SITE PLAN

SCALE: AS SHOWN
FILE NO.: 134-1601-200
DATE: OCTOBER 2016
SHEET NO.: B1

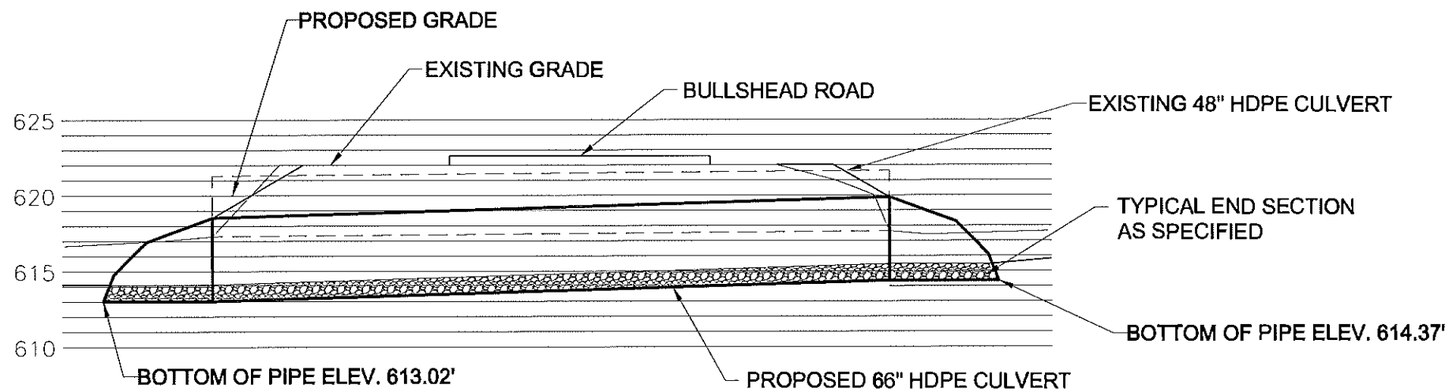

A
B2

BULLSHEAD ROAD PROFILE

GRAPHIC SCALE
5.0 0 2.5 5.0 10.0

NO.	DATE	REVISION	BY
00	10/2016	ORIGINAL ISSUE	ATB

JME
John M. McDonald Engineering
a member of PRIME Group®

New York Office
7 South Church Street Schenectady, New York 12305
Ph: 518 382 1774 Fax: 518 382 1776
www.mcdonaldengineers.com www.primeeng.com

PROJ. ENGR.: ATB | DRAWN BY: BSN | CHECKED BY: JMM

JOHN M. MCDONALD LICENSED PROFESSIONAL ENGINEER NO. 54506 STATE OF NEW YORK

UNAUTHORIZED ALTERATIONS TO THIS DOCUMENT IS A VIOLATION OF SECTION 7209 SUBDIVISION 2 OF NEW YORK STATE EDUCATION LAW

MONTGOMERY COUNTY

CULVERT REPLACEMENT

CONTRACT NO. 3 - TOWN OF AMSTERDAM CULVERT REPLACEMENT
CONTRACT NO. 4 - TOWN OF FLORIDA CULVERT REPLACEMENT

SHEET TITLE:
BULLSHEAD ROAD PROFILE

SCALE: AS SHOWN
FILE NO.: 134-1601-203
DATE: OCTOBER 2016
SHEET NO.: B2

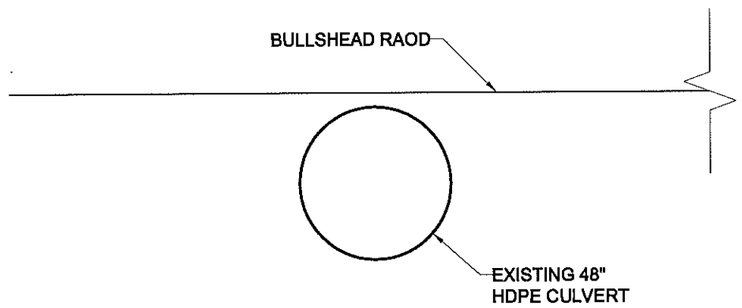

A
B3
EXISTING CROSS SECTION

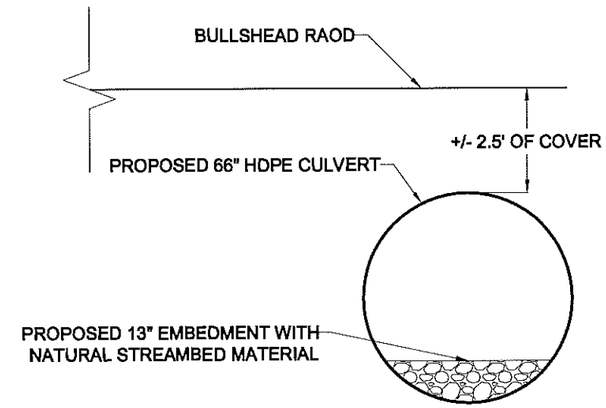

B
B3
PROPOSED CROSS SECTION

NO.	DATE	REVISION	BY
00	10/2016	ORIGINAL ISSUE	ATB

JME
John M. McDonald Engineering
a member of PRIME Group®
New York Office
7 South Church Street Schenectady, New York 12305
Ph: 518 382 1774 Fax: 518 382 1776
www.mcdonaldengineers.com www.primeeng.com

PROJ. ENGR.: ATB | DRAWN BY: BSN | CHECKED BY: JMM

UNAUTHORIZED ALTERATIONS TO THIS DOCUMENT IS A VIOLATION OF SECTION 7209 SUBDIVISION 2 OF NEW YORK STATE EDUCATION LAW

MONTGOMERY COUNTY

CULVERT REPLACEMENT

CONTRACT NO. 3 - TOWN OF AMSTERDAM CULVERT REPLACEMENT
CONTRACT NO. 4 - TOWN OF FLORIDA CULVERT REPLACEMENT

SHEET TITLE:

BULLSHEAD ROAD
CROSS SECTIONS

SCALE: AS SHOWN
FILE NO.: 134-1601-206
DATE: OCTOBER 2016
SHEET NO.: B3

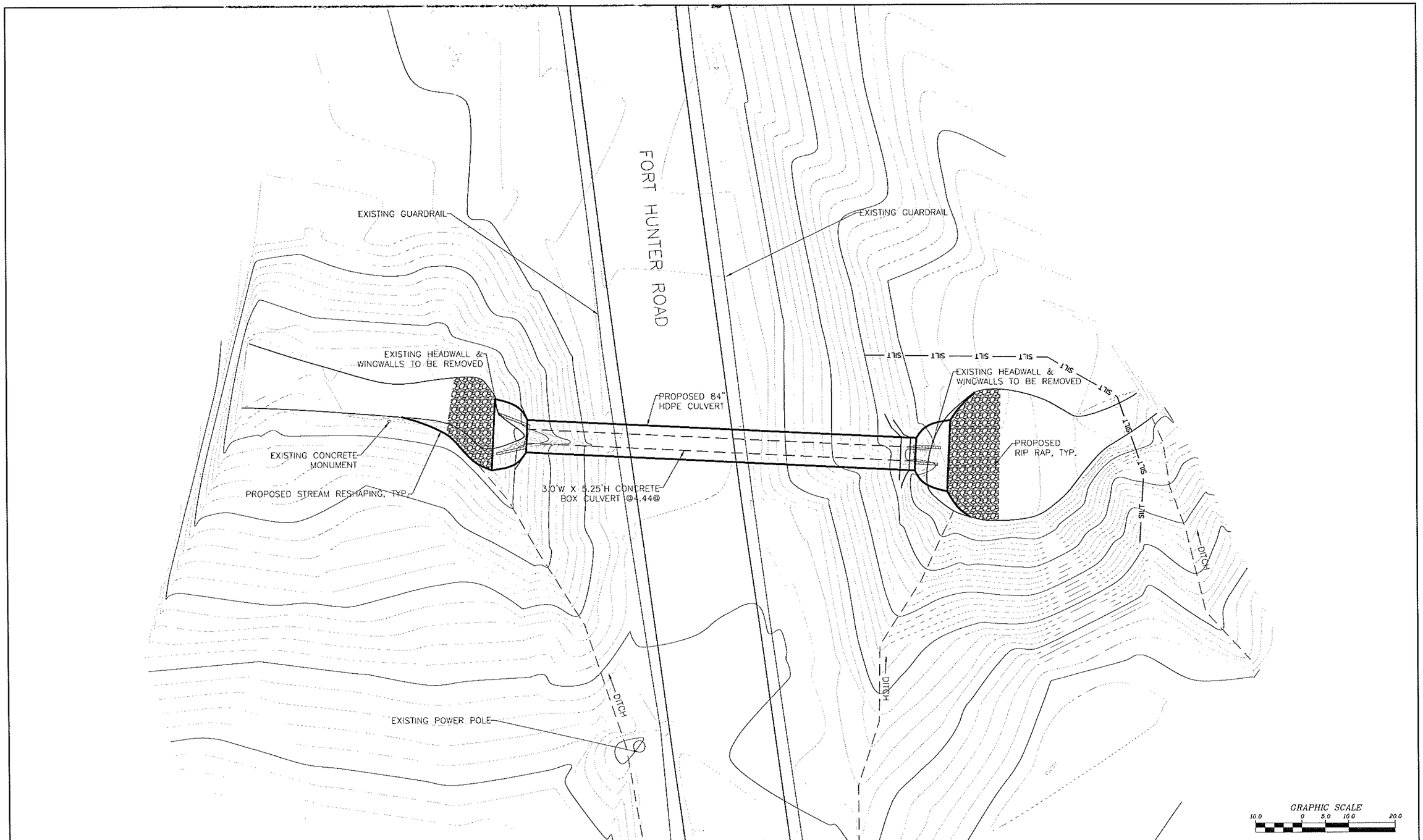

NO.	DATE	REVISION	BY
00	10/2016	ORIGINAL ISSUE	ATB

JME
John M. McDonald Engineering
a member of PRIME Group

New York Office
7 South Church Street Schenectady, New York 12305
Ph: 518 382 1774 Fax: 518 382 1776
www.mcdonaldengineers.com www.primeeng.com

PROJ. ENGR.: ATB | DRAWN BY: BSN | CHECKED BY: JMM

JOHN M. McDONALD LICENSED PROFESSIONAL ENGINEER NO. 54500 STATE OF NEW YORK

UNAUTHORIZED ALTERATIONS TO THIS DOCUMENT IS A VIOLATION OF SECTION 7209 SUBDIVISION 2 OF NEW YORK STATE EDUCATION LAW

MONTGOMERY COUNTY

CULVERT REPLACEMENT

CONTRACT NO. 3 - TOWN OF AMSTERDAM CULVERT REPLACEMENT
CONTRACT NO. 4 - TOWN OF FLORIDA CULVERT REPLACEMENT

SHEET TITLE:

FORT HUNTER ROAD
SITE PLAN

SCALE: AS SHOWN

FILE NO.: 134-1601-210

DATE: OCTOBER 2016

SHEET NO.: B4

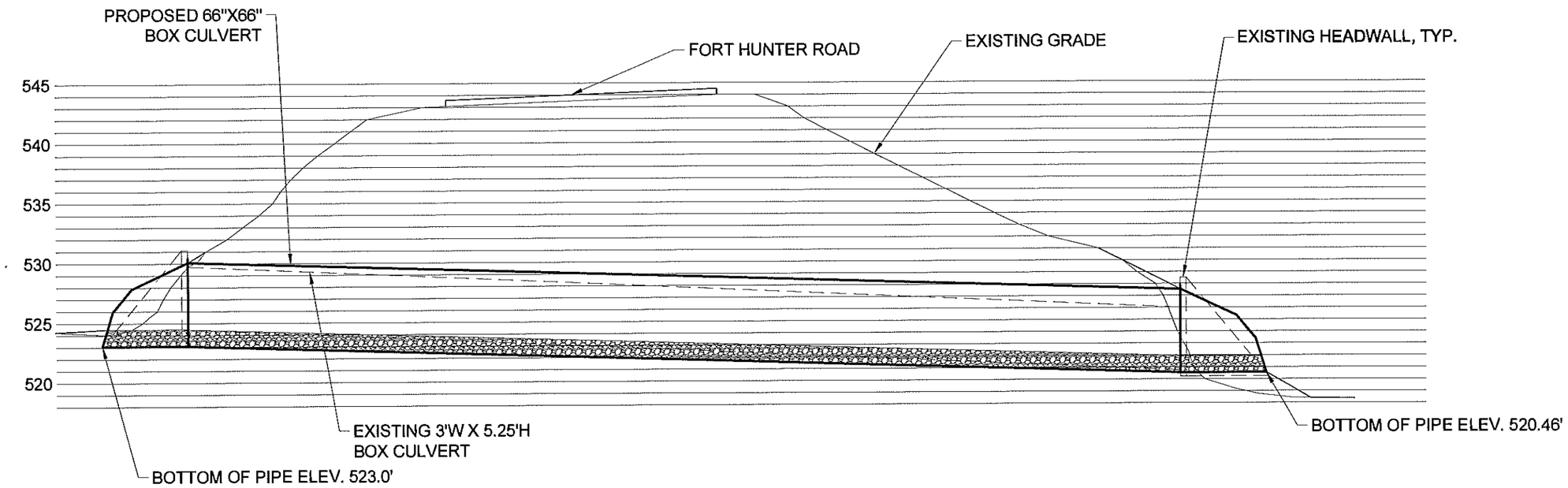

A
B5

FORT HUNTER ROAD PROFILE

GRAPHIC SCALE
5.0 0 2.5 5.0 10.0

NO.	DATE	REVISION	BY
00	10/2016	ORIGINAL ISSUE	ATB

JME
John M. McDonald Engineering
a member of PRITCHEE Group®

New York Office
7 South Church Street Schenectady, New York 12305
Ph: 518 382 1774 Fax: 518 382 1776
www.mcdonaldengineers.com www.primeeng.com

PROJ. ENGR.: ATB | DRAWN BY: BSN | CHECKED BY: JMM

LICENSED PROFESSIONAL ENGINEER JOHN M. McDONALD NO. 54568 STATE OF NEW YORK

UNAUTHORIZED ALTERATIONS TO THIS DOCUMENT IS A VIOLATION OF SECTION 7209 SUBDIVISION 2 OF NEW YORK STATE EDUCATION LAW

MONTGOMERY COUNTY

CULVERT REPLACEMENT

CONTRACT NO. 3 - TOWN OF AMSTERDAM CULVERT REPLACEMENT
CONTRACT NO. 4 - TOWN OF FLORIDA CULVERT REPLACEMENT

SHEET TITLE:
FORT HUNTER ROAD PROFILE

SCALE: AS SHOWN
FILE NO.: 134-1601-213
DATE: OCTOBER 2016
SHEET NO.: B5

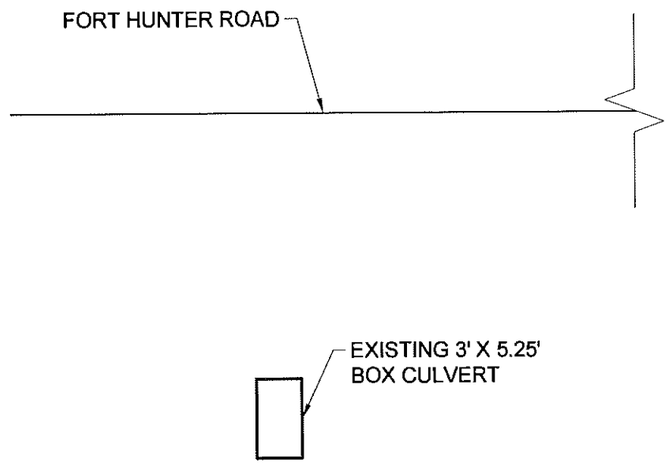

A
B6
EXISTING CROSS SECTION

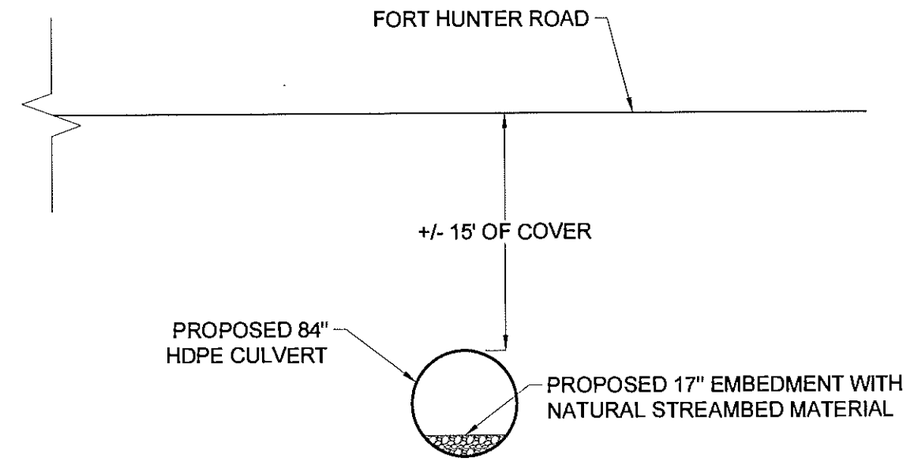

B
B6
PROPOSED CROSS SECTION

NO.	DATE	REVISION	BY
00	10/2016	ORIGINAL ISSUE	ATB

JME
John M. McDonald Engineering
a member of PRIME Group®
New York Office
7 South Church Street Schenectady, New York 12305
Ph: 518 382 1774 Fax: 518 382 1776
www.mcdonaldengineers.com www.primeeng.com

PROJ. ENGR.: ATB | DRAWN BY: BSN | CHECKED BY: JMM

JOHN M. McDONALD PROFESSIONAL ENGINEER STATE OF NEW YORK NO. 54500

UNAUTHORIZED ALTERATIONS TO THIS DOCUMENT IS A VIOLATION OF SECTION 7209 SUBDIVISION 2 OF NEW YORK STATE EDUCATION LAW

MONTGOMERY COUNTY

CULVERT REPLACEMENT

CONTRACT NO. 3 - TOWN OF AMSTERDAM CULVERT REPLACEMENT
CONTRACT NO. 4 - TOWN OF FLORIDA CULVERT REPLACEMENT

SHEET TITLE:

FORT HUNTER ROAD
CROSS SECTIONS

SCALE: AS SHOWN
FILE NO.: 134-1601-216
DATE: OCTOBER 2016
SHEET NO.: B6

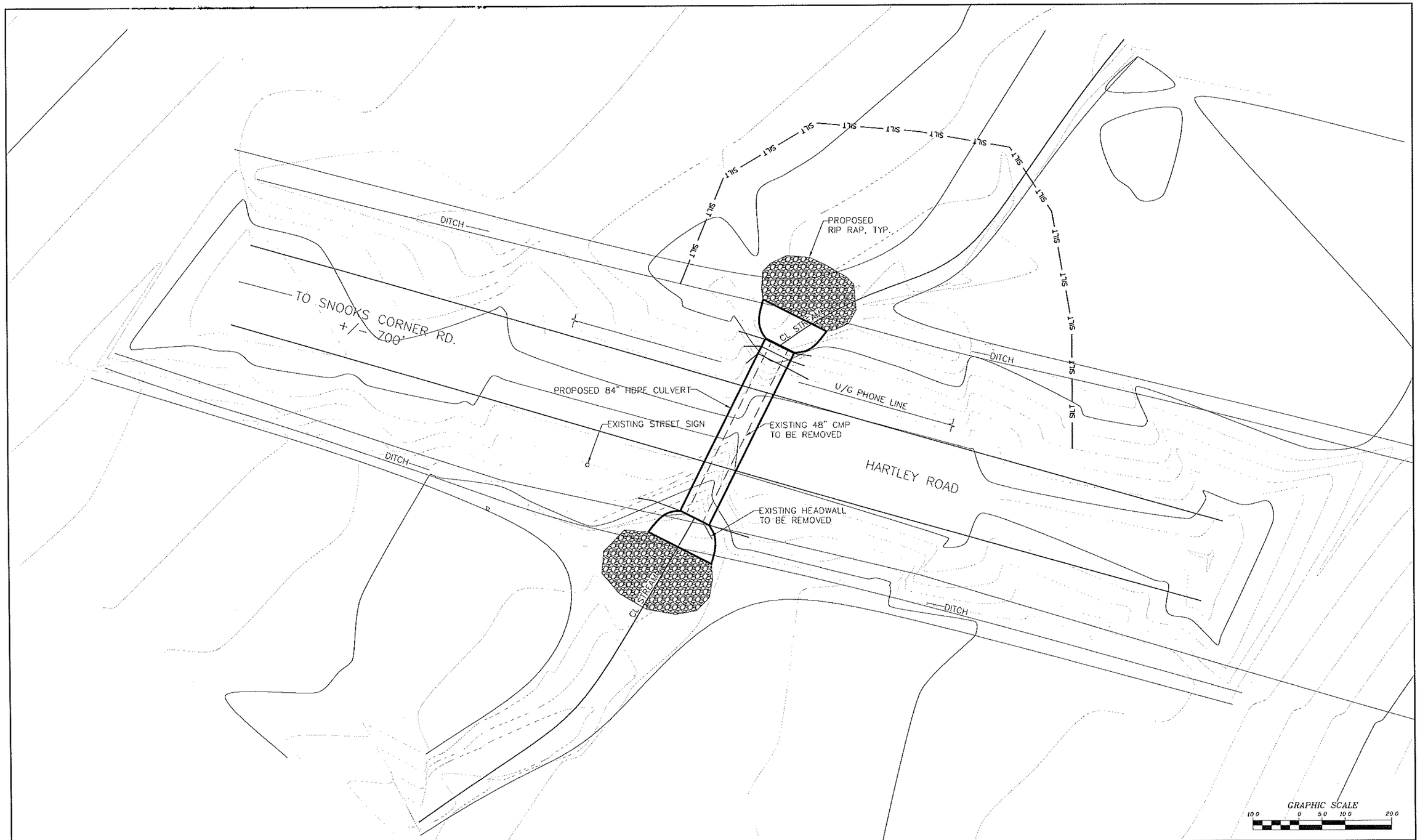

NO.	DATE	REVISION	BY
00	10/2016	ORIGINAL ISSUE	ATB

JME
John M. McDonald Engineering, P.C.
a member of PRIME Group

New York Office
7 South Church Street Schenectady, New York 12305
Ph: 518 382 1774 Fax: 518 382 1776
www.mcdonaldengineers.com www.primeeng.com

PROJ. ENGR.: ATB | DRAWN BY: BSN | CHECKED BY: JMM

LICENSED PROFESSIONAL ENGINEER JOHN M. MCDONALD NO. 54558 STATE OF NEW YORK

UNAUTHORIZED ALTERATIONS TO THIS DOCUMENT IS A VIOLATION OF SECTION 7209 SUBDIVISION 2 OF NEW YORK STATE EDUCATION LAW

MONTGOMERY COUNTY

CULVERT REPLACEMENT

CONTRACT NO. 3 - TOWN OF AMSTERDAM CULVERT REPLACEMENT
CONTRACT NO. 4 - TOWN OF FLORIDA CULVERT REPLACEMENT

SHEET TITLE:

HARTLEY ROAD
SITE PLAN

SCALE: AS SHOWN
FILE NO.: 134-1601-220
DATE: OCTOBER 2016
SHEET NO.: B7

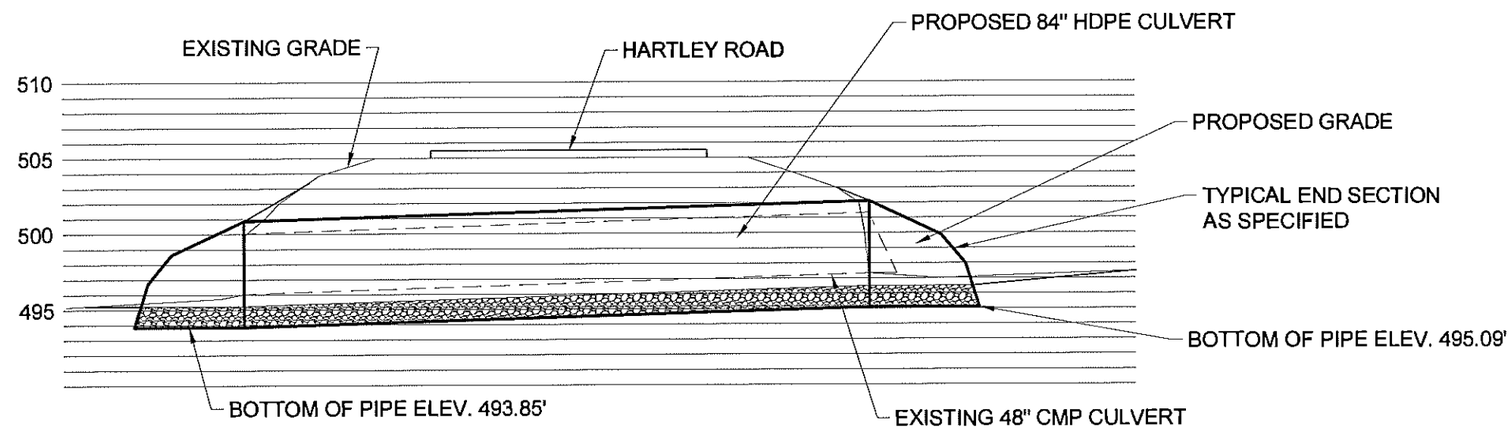

A
B8

HARTLEY ROAD PROFILE

GRAPHIC SCALE
5.0 0 2.5 5.0 10.0

NO.	DATE	REVISION	BY
00	10/2016	ORIGINAL ISSUE	ATB

JME
John M. McDonald Engineering, P.C.
a member of PRIME Group®
New York Office
7 South Church Street Schenectady, New York 12305
Ph: 518 382 1774 Fax: 518 382 1776
www.mcdonaldengineers.com www.primeeng.com

PROJ. ENGR.: ATB | DRAWN BY: BSN | CHECKED BY: JMM

UNAUTHORIZED ALTERATIONS TO THIS DOCUMENT IS A VIOLATION OF SECTION 7209 SUBDIVISION 2 OF NEW YORK STATE EDUCATION LAW

MONTGOMERY COUNTY

CULVERT REPLACEMENT

CONTRACT NO. 3 - TOWN OF AMSTERDAM CULVERT REPLACEMENT
CONTRACT NO. 4 - TOWN OF FLORIDA CULVERT REPLACEMENT

SHEET TITLE:
HARTLEY ROAD PROFILE

SCALE: AS SHOWN
FILE NO.: 134-1601-223
DATE: OCTOBER 2016
SHEET NO.: B8

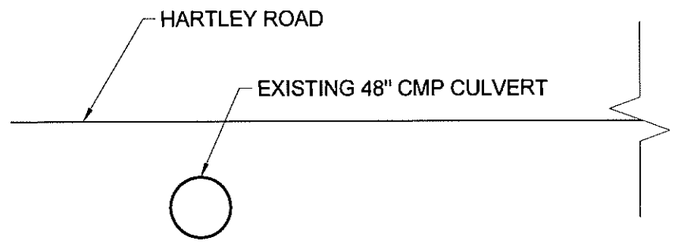

A / B9 EXISTING CROSS SECTION

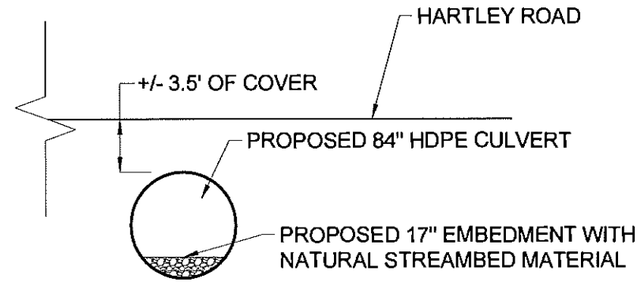

B / B9 PROPOSED CROSS SECTION

NO.	DATE	REVISION	BY
00	10/2016	ORIGINAL ISSUE	ATB

JME
John M. McDonald Engineering, P.C.
a member of PRIME Group®

New York Office
7 South Church Street Schenectady, New York 12305
Ph: 518 382 1774 Fax: 518 382 1776
www.mcdonaldengineers.com www.primeeng.com

PROJ. ENGR.: ATB | DRAWN BY: BSN | CHECKED BY: JMM

UNAUTHORIZED ALTERATIONS TO THIS DOCUMENT IS A VIOLATION OF SECTION 7209 SUBDIVISION 2 OF NEW YORK STATE EDUCATION LAW

MONTGOMERY COUNTY

CULVERT REPLACEMENT

CONTRACT NO. 3 - TOWN OF AMSTERDAM CULVERT REPLACEMENT
CONTRACT NO. 4 - TOWN OF FLORIDA CULVERT REPLACEMENT

SHEET TITLE:

HARTLEY ROAD CROSS SECTIONS

SCALE: AS SHOWN

FILE NO.: 134-1601-226

DATE: OCTOBER 2016

SHEET NO.: B9

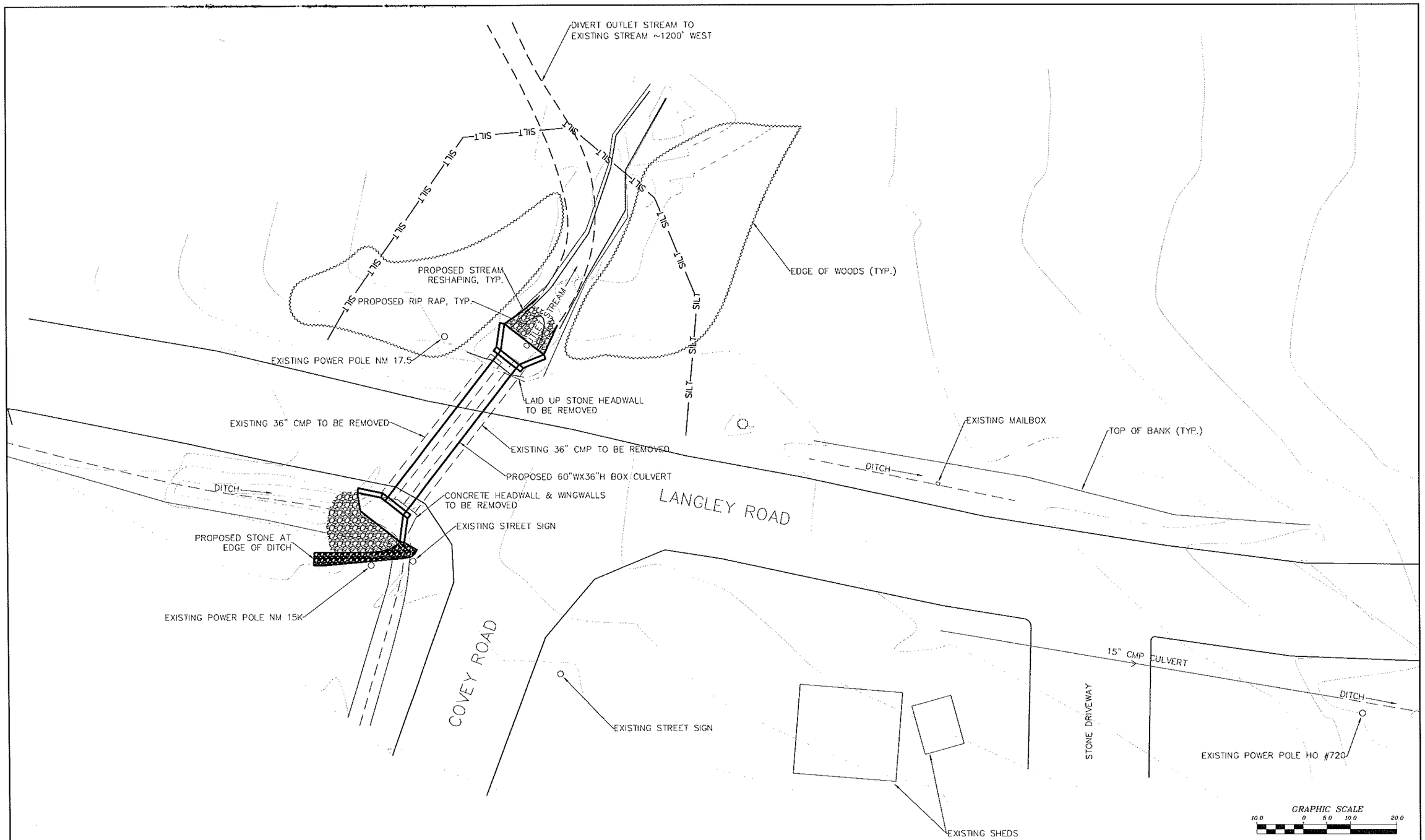

NO.	DATE	REVISION	BY
00	10/2016	ORIGINAL ISSUE	ATB

JME
John M. McDonald Engineering, P.C.
a member of PRIME Group®

New York Office
7 South Church Street Schenectady, New York 12305
Ph: 518 382 1774 Fax: 518 382 1776
www.mcdonaldengineers.com www.primeeng.com

PROJ. ENGR.: ATB | DRAWN BY: BSN | CHECKED BY: JMM

LICENSED PROFESSIONAL ENGINEER JOHN M. McDONALD NO. 54558 STATE OF NEW YORK

UNAUTHORIZED ALTERATIONS TO THIS DOCUMENT IS A VIOLATION OF SECTION 7209 SUBDIVISION 2 OF NEW YORK STATE EDUCATION LAW

MONTGOMERY COUNTY

CULVERT REPLACEMENT

CONTRACT NO. 3 - TOWN OF AMSTERDAM CULVERT REPLACEMENT
CONTRACT NO. 4 - TOWN OF FLORIDA CULVERT REPLACEMENT

SHEET TITLE:

LANGLEY ROAD
SITE PLAN

SCALE: AS SHOWN

FILE NO.: 134-1601-230

DATE: OCTOBER 2016

SHEET NO.: B10

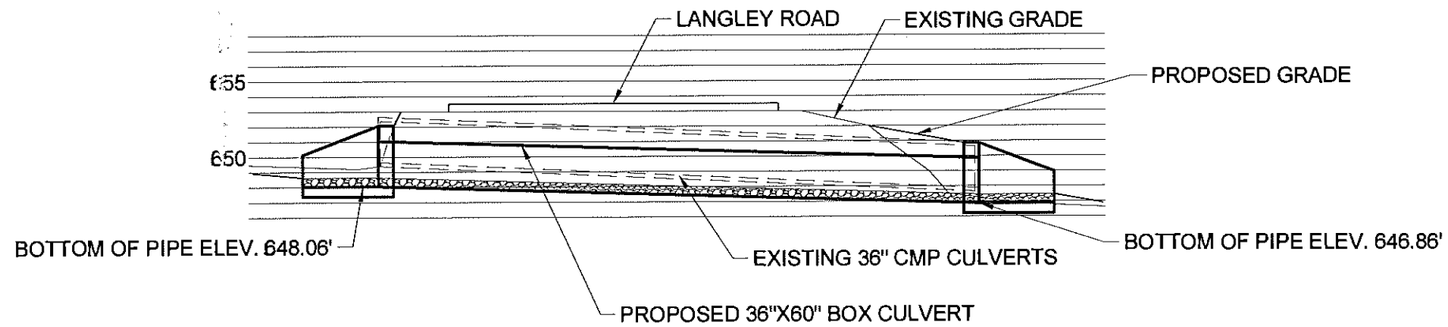

A / B11 LANGLEY ROAD PROFILE

GRAPHIC SCALE
5.0 0 2.5 5.0 10.0

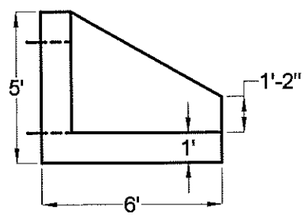

B / B11 HEADWALL ELEVATION

DO NOT SCALE

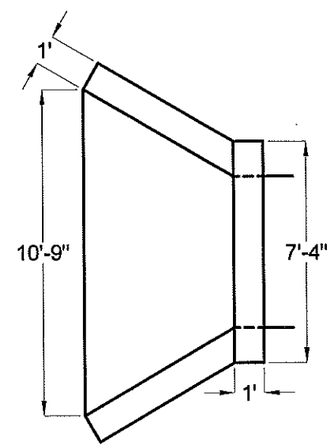

C / B11 OUTLET HEADWALL PLAN

DO NOT SCALE

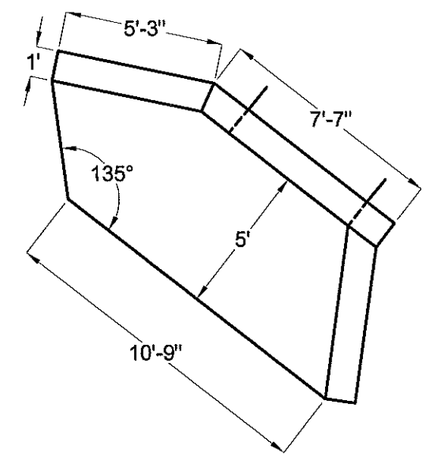

D / B11 INLET HEADWALL PLAN

DO NOT SCALE

NO.	DATE	REVISION	BY
00	10/2016	ORIGINAL ISSUE	ATB

JME
John M. McDonald Engineering, P.C.
a member of PRIME Group®
New York Office
7 South Church Street Schenectady, New York 12305
Ph: 518 382 1774 Fax: 518 382 1776
www.mcdonaldenglineers.com www.primeeng.com

PROJ. ENGR.: ATB | DRAWN BY: BSN | CHECKED BY: JMM

JOHN M. MCDONALD PROFESSIONAL ENGINEER NO. 54505 STATE OF NEW YORK

UNAUTHORIZED ALTERATIONS TO THIS DOCUMENT IS A VIOLATION OF SECTION 7209 SUBDIVISION 2 OF NEW YORK STATE EDUCATION LAW

MONTGOMERY COUNTY

CULVERT REPLACEMENT

CONTRACT NO. 3 - TOWN OF AMSTERDAM CULVERT REPLACEMENT
CONTRACT NO. 4 - TOWN OF FLORIDA CULVERT REPLACEMENT

SHEET TITLE: LANGLEY ROAD PROFILE

SCALE: AS SHOWN
FILE NO.: 134-1601-233
DATE: OCTOBER 2016
SHEET NO.: B11

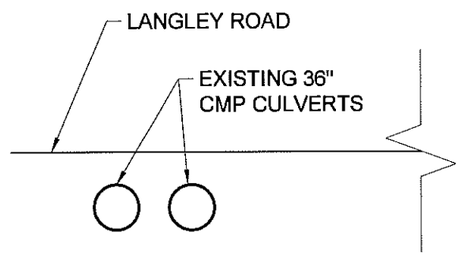

A
B12
EXISTING CROSS SECTION

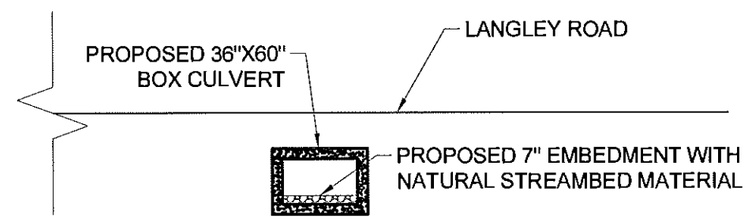

B
B12
PROPOSED CROSS SECTION

NO.	DATE	REVISION	BY
00	10/2016	ORIGINAL ISSUE	ATB

JME
John M. McDonald Engineering, P.C.
a member of PRIME Group®
New York Office
7 South Church Street Schenectady, New York 12305
Ph: 518 382 1774 Fax: 518 382 1776
www.mcdonaldengineers.com www.primeeng.com

PROJ. ENGR.: ATB | DRAWN BY: BSN | CHECKED BY: JMM

JOHN M. MCDONALD PROFESSIONAL ENGINEER NO. 54506 STATE OF NEW YORK

UNAUTHORIZED ALTERATIONS TO THIS DOCUMENT IS A VIOLATION OF SECTION 7209 SUBDIVISION 2 OF NEW YORK STATE EDUCATION LAW

MONTGOMERY COUNTY

CULVERT REPLACEMENT

CONTRACT NO. 3 - TOWN OF AMSTEROAM CULVERT REPLACEMENT
CONTRACT NO. 4 - TOWN OF FLORIDA CULVERT REPLACEMENT

SHEET TITLE:

LANGLEY ROAD CROSS SECTIONS

SCALE: AS SHOWN
FILE NO.: 134-1601-236
DATE: OCTOBER 2016
SHEET NO.: B12

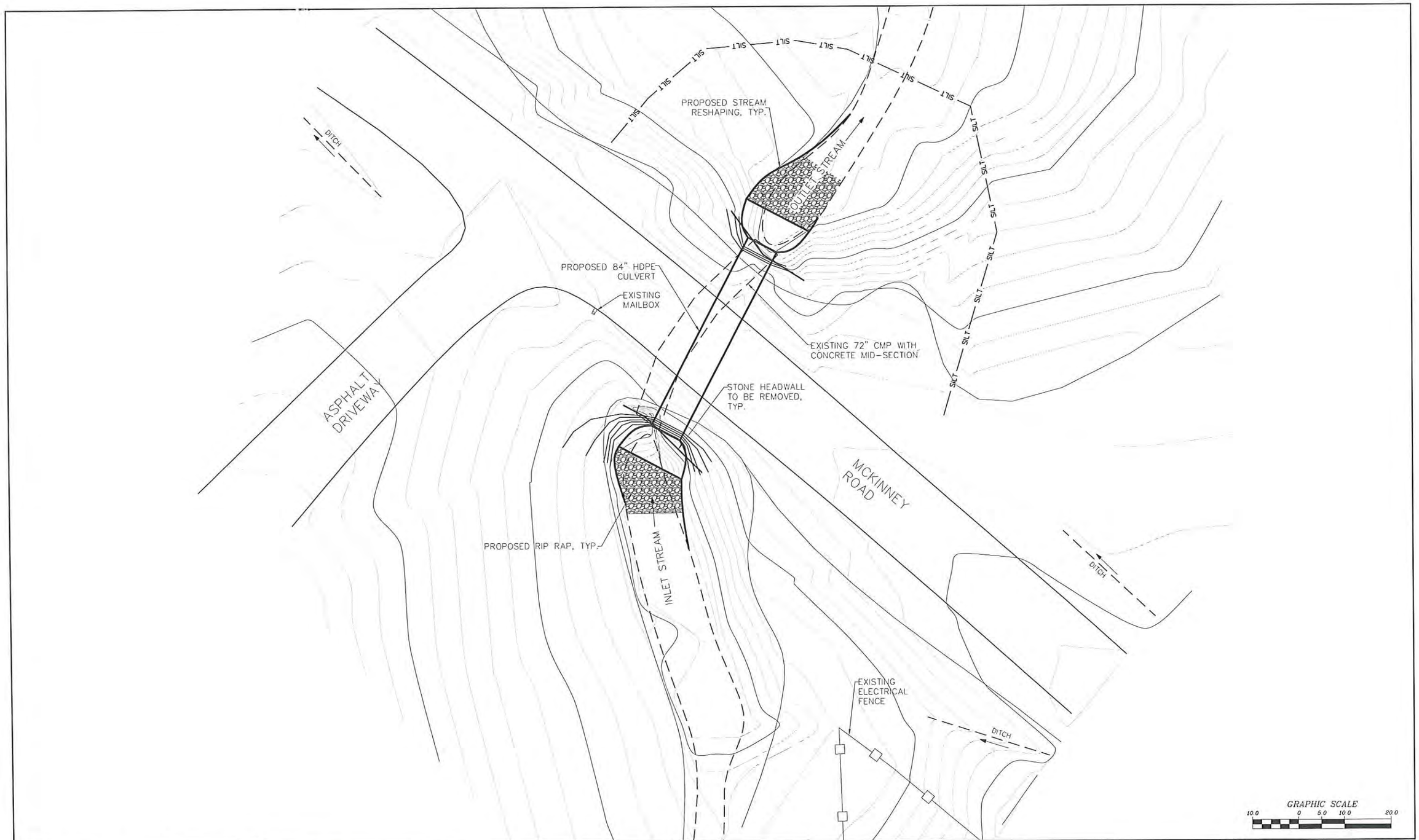

NO.	DATE	REVISION	BY
00	10/2016	ORIGINAL ISSUE	ATB

JME
John M. McDonald Engineering
a member of PRIME Group

New York Office
7 South Church Street Schenectady, New York 12305
Ph: 518 382 1774 Fax: 518 382 1776
www.mcdonaldengineers.com www.primeeng.com

PROJ. ENGR.: ATB | DRAWN BY: BSN | CHECKED BY: JMM

JOHN M. MCDONALD PROFESSIONAL ENGINEER NO. 54505 STATE OF NEW YORK

UNAUTHORIZED ALTERATIONS TO THIS DOCUMENT IS A VIOLATION OF SECTION 7209 SUBDIVISION 2 OF NEW YORK STATE EDUCATION LAW

MONTGOMERY COUNTY

CULVERT REPLACEMENT

CONTRACT NO. 3 - TOWN OF AMSTERDAM CULVERT REPLACEMENT
CONTRACT NO. 4 - TOWN OF FLORIDA CULVERT REPLACEMENT

SHEET TITLE:

MCKINNEY ROAD 4A
SITE PLAN

SCALE: AS SHOWN

FILE NO.: 134-1601-240

DATE: OCTOBER 2016

SHEET NO.: B13

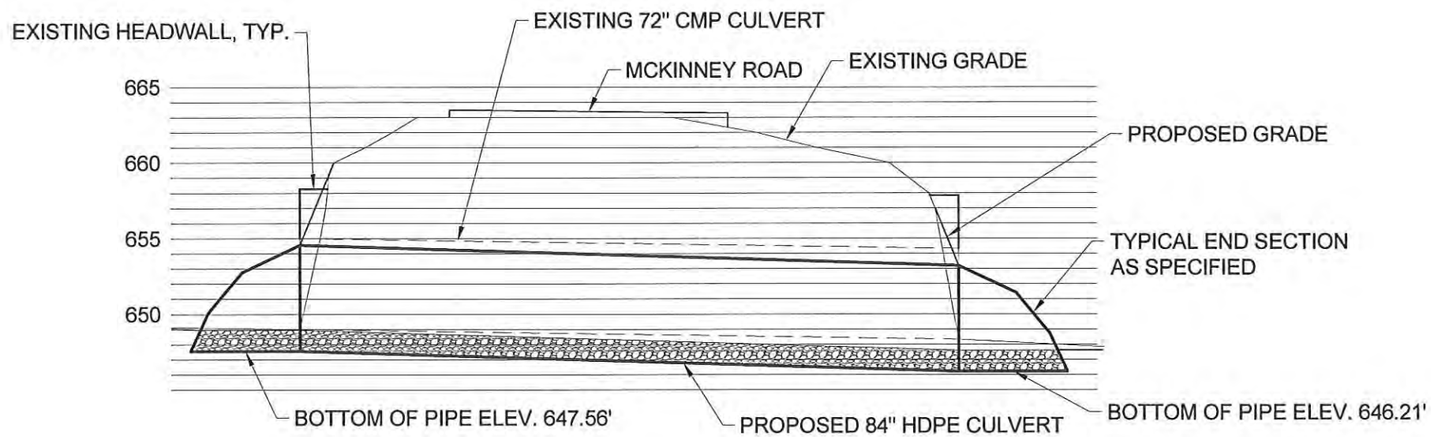

A
B14

MCKINNEY ROAD 4A PROFILE

GRAPHIC SCALE
5.0 0 2.5 5.0 10.0

NO.	DATE	REVISION	BY
00	10/2016	ORIGINAL ISSUE	ATB

JME
John M. McDonald Engineering
A Division of PRIME AE Group
New York Office
7 South Church Street Schenectady, New York 12305
Ph: 518 382 1774 Fax: 518 382 1776
www.mcdonaldenglineers.com www.primeeng.com

PROJ. ENGR.: ATB | DRAWN BY: BSN | CHECKED BY: JMM

LICENSED PROFESSIONAL ENGINEER JOHN M. MCDONALD NO. 54596 STATE OF NEW YORK

UNAUTHORIZED ALTERATIONS TO THIS DOCUMENT IS A VIOLATION OF SECTION 7209 SUBDIVISION 2 OF NEW YORK STATE EDUCATION LAW

MONTGOMERY COUNTY

CULVERT REPLACEMENT

CONTRACT NO. 3 - TOWN OF AMSTERDAM CULVERT REPLACEMENT
CONTRACT NO. 4 - TOWN OF FLORIDA CULVERT REPLACEMENT

SHEET TITLE:
MCKINNEY ROAD 4A
PROFILE

SCALE: AS SHOWN
FILE NO.: 134-1601-243
DATE: OCTOBER 2016
SHEET NO.: B14

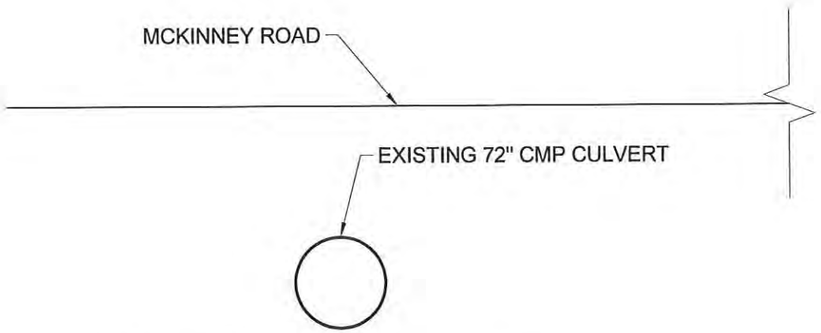

A / B15 EXISTING CROSS SECTION

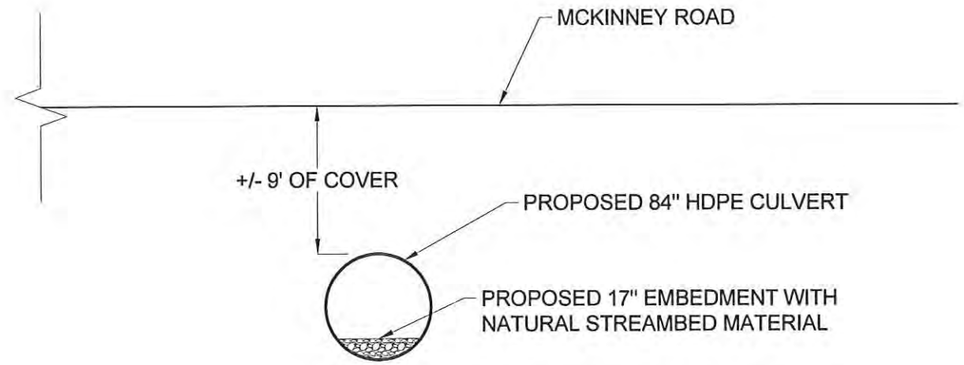

B / B15 PROPOSED CROSS SECTION

NO.	DATE	REVISION	BY
00	10/2016	ORIGINAL ISSUE	ATB

JME
John M. McDonald Engineering
a member of PRIME Group
New York Office
7 South Church Street Schenectady, New York 12305
Ph: 518 382 1774 Fax: 518 382 1776
www.mcdonaldengineers.com www.primeeng.com

PROJ. ENGR.: ATB | DRAWN BY: BSN | CHECKED BY: JMM

UNAUTHORIZED ALTERATIONS TO THIS DOCUMENT IS A VIOLATION OF SECTION 7209 SUBDIVISION 2 OF NEW YORK STATE EDUCATION LAW

MONTGOMERY COUNTY

CULVERT REPLACEMENT

CONTRACT NO. 3 - TOWN OF AMSTERDAM CULVERT REPLACEMENT
CONTRACT NO. 4 - TOWN OF FLORIDA CULVERT REPLACEMENT

SHEET TITLE:

MCKINNEY ROAD 4A
CROSS SECTIONS

SCALE: AS SHOWN

FILE NO.: 134-1601-246

DATE: OCTOBER 2016

SHEET NO.: B15

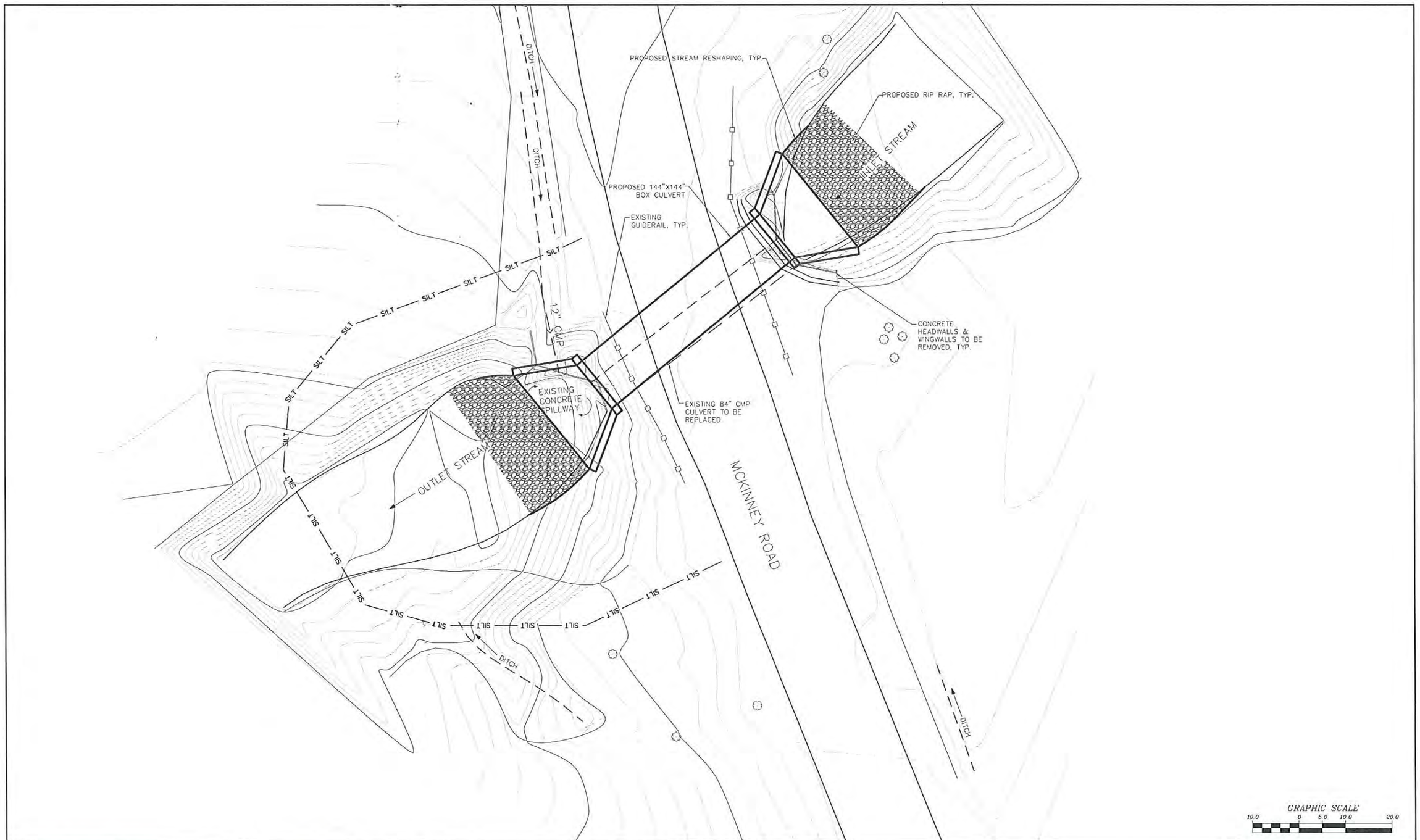

NO.	DATE	REVISION	BY
00	10/2016	ORIGINAL ISSUE	ATB

JME
John M. McDonald Engineering
a member of FEDER Group

New York Office
7 South Church Street Schenectady, New York 12305
Ph: 518 382 1774 Fax: 518 382 1776
www.mcdonaldengineers.com www.primeeng.com

PROJ. ENGR.: ATB | DRAWN BY: BSN | CHECKED BY: JMM

JOHN M. McDONALD PROFESSIONAL ENGINEER LICENSED STATE OF NEW YORK NO. 54508

UNAUTHORIZED ALTERATIONS TO THIS DOCUMENT IS A VIOLATION OF SECTION 7209 SUBDIVISION 2 OF NEW YORK STATE EDUCATION LAW

MONTGOMERY COUNTY

CULVERT REPLACEMENT

CONTRACT NO. 3 - TOWN OF AMSTERDAM CULVERT REPLACEMENT
CONTRACT NO. 4 - TOWN OF FLORIDA CULVERT REPLACEMENT

SHEET TITLE:

MCKINNEY ROAD 4B
SITE PLAN

SCALE: AS SHOWN

FILE NO.: 134-1601-250

DATE: OCTOBER 2016

SHEET NO.: B16

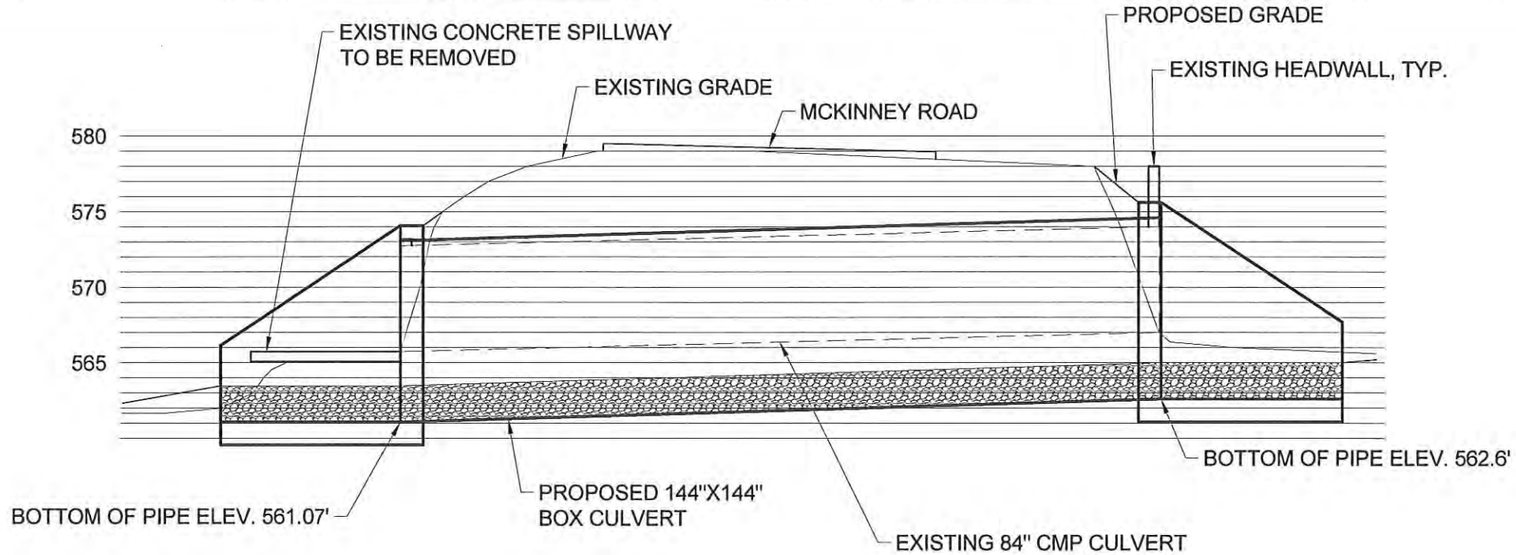

A
B17

MCKINNEY ROAD 4B PROFILE

GRAPHIC SCALE
5.0 0 2.5 5.0 10.0

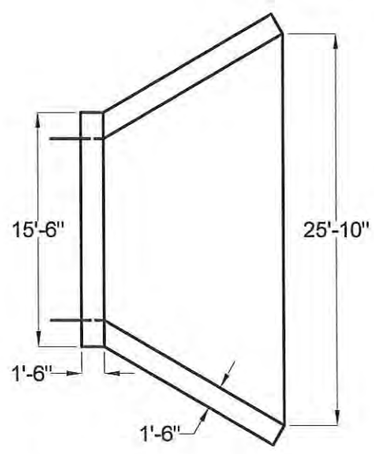

B
B17

HEADWALL PLAN

DO NOT SCALE

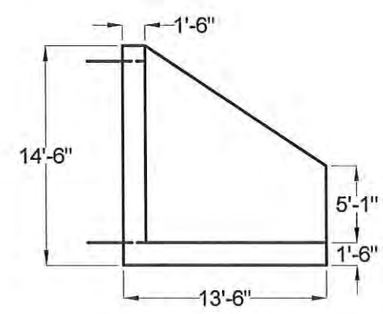

C
B17

HEADWALL ELEVATION

DO NOT SCALE

NO.	DATE	REVISION	BY
00	10/2016	ORIGINAL ISSUE	ATB

JME
John M. McDonald Engineering
Knowledge & Passion

New York Office
7 South Church Street Schenectady, New York 12305
Ph: 518 382 1774 Fax: 518 382 1776
www.mcdonaldengineers.com www.primeeng.com

PROJ. ENGR.: ATB | DRAWN BY: BSN | CHECKED BY: JMM

UNAUTHORIZED ALTERATIONS TO THIS DOCUMENT IS A VIOLATION OF SECTION 7209 SUBDIVISION 2 OF NEW YORK STATE EDUCATION LAW

MONTGOMERY COUNTY

CULVERT REPLACEMENT

CONTRACT NO. 3 - TOWN OF AMSTERDAM CULVERT REPLACEMENT
CONTRACT NO. 4 - TOWN OF FLORIDA CULVERT REPLACEMENT

SHEET TITLE:

MCKINNEY ROAD 4B
PROFILE

SCALE: AS SHOWN
FILE NO.: 134-1601-253
DATE: OCTOBER 2016
SHEET NO.: B17

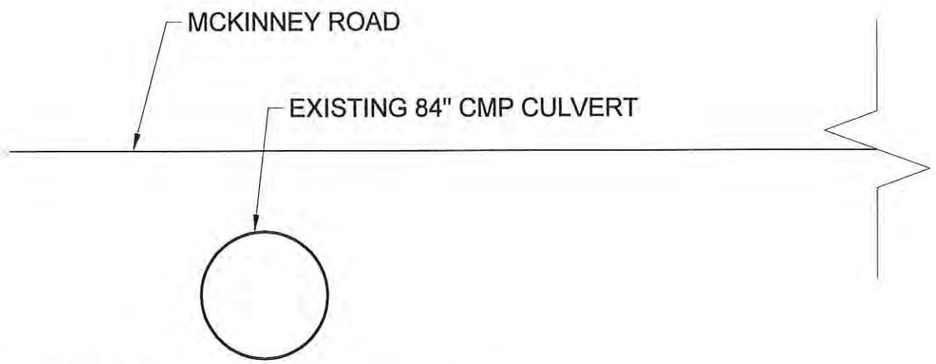

A / B18 EXISTING CROSS SECTION

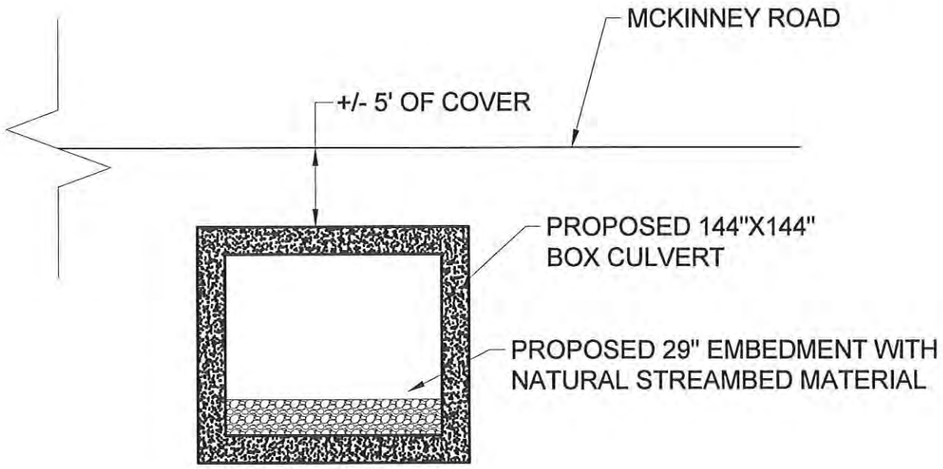

B / B18 PROPOSED CROSS SECTION

NO.	DATE	REVISION	BY
00	10/2016	ORIGINAL ISSUE	ATB

JME
John M. McDonald Engineering
New York Office
7 South Church Street Schenectady, New York 12305
Ph: 518 382 1774 Fax: 518 382 1776
www.mcdonaldengineers.com www.primeeng.com

PROJ. ENGR.: ATB | DRAWN BY: BSN | CHECKED BY: JMM

UNAUTHORIZED ALTERATIONS TO THIS DOCUMENT IS A VIOLATION OF SECTION 7209 SUBDIVISION 2 OF NEW YORK STATE EDUCATION LAW

MONTGOMERY COUNTY

CULVERT REPLACEMENT

CONTRACT NO. 3 - TOWN OF AMSTERDAM CULVERT REPLACEMENT
CONTRACT NO. 4 - TOWN OF FLORIDA CULVERT REPLACEMENT

SHEET TITLE:

MCKINNEY ROAD 4B
CROSS SECTIONS

SCALE: AS SHOWN
FILE NO.: 134-1601-256
DATE: OCTOBER 2016
SHEET NO.: B18

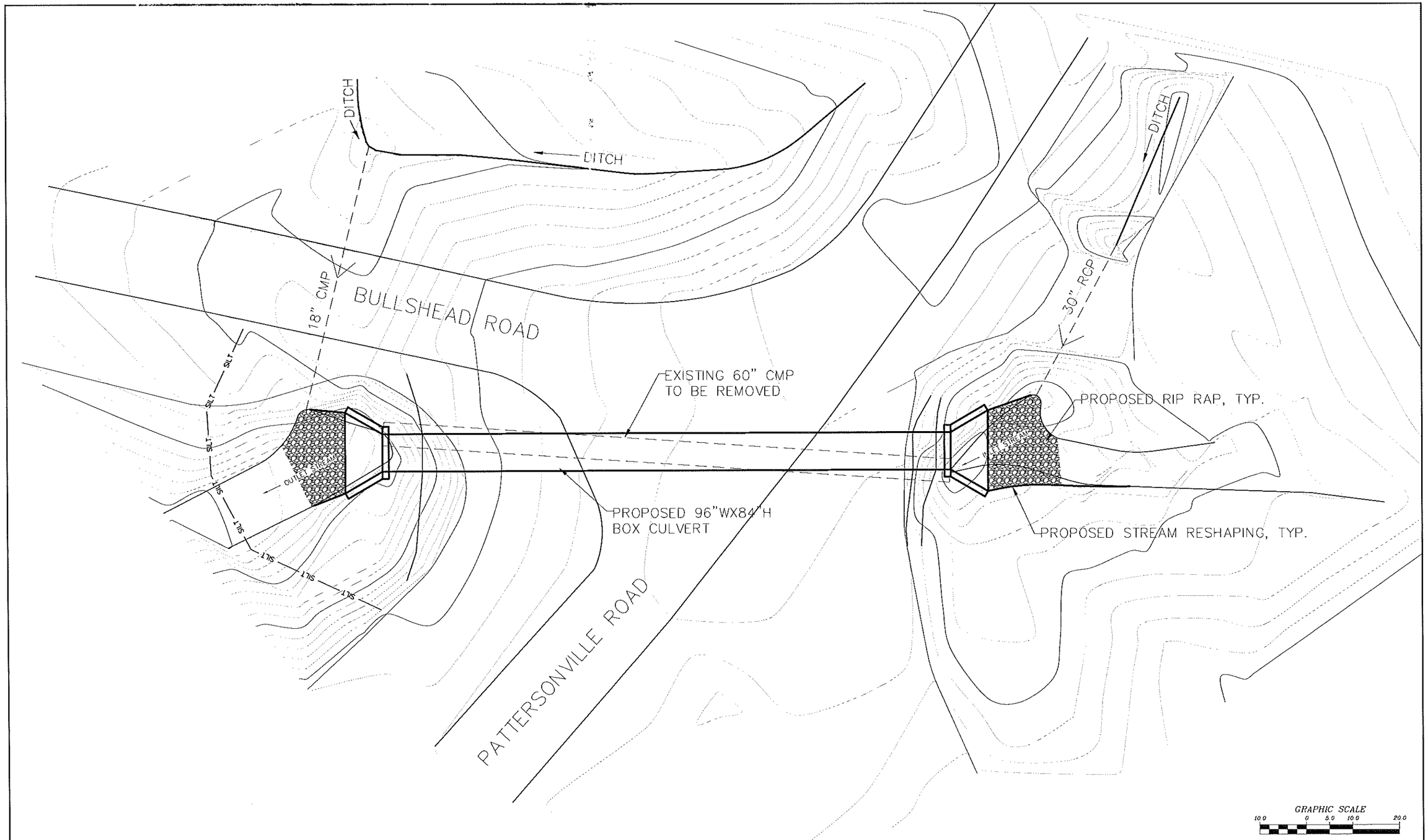

NO.	DATE	REVISION	BY
00	10/2016	ORIGINAL ISSUE	ATB

JME
John M. McDonald Engineering, P.C.
a member of PRIME Group®

New York Office
7 South Church Street Schenectady, New York 12305
Ph: 518 382 1774 Fax: 518 382 1776
www.mcdonaldengineers.com www.primeeng.com

PROJ. ENGR.: ATB | DRAWN BY: BSN | CHECKED BY: JMM

JOHN M. MCDONALD PROFESSIONAL ENGINEER NO. 54508 STATE OF NEW YORK

UNAUTHORIZED ALTERATIONS TO THIS DOCUMENT IS A VIOLATION OF SECTION 7209 SUBDIVISION 2 OF NEW YORK STATE EDUCATION LAW

MONTGOMERY COUNTY

MONTGOMERY COUNTY CULVERT
REPLACEMENT

SHEET TITLE:

PATTERSONVILLE ROAD
SITE PLAN

SCALE: AS SHOWN

FILE NO.: 134-1601-260

DATE: OCTOBER 2016

SHEET NO.: B19

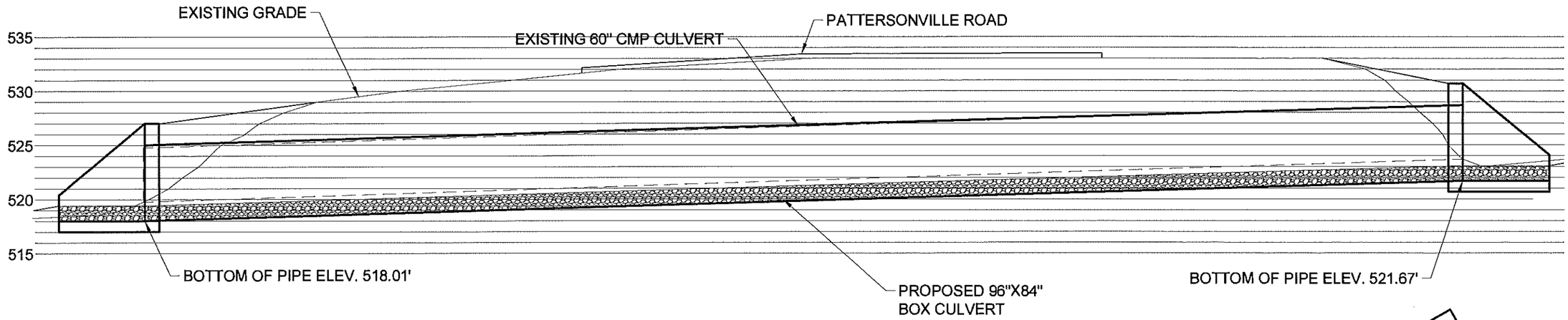

A / B20 PATTERSONVILLE ROAD PROFILE

GRAPHIC SCALE
5.0 0 2.5 5.0 10.0

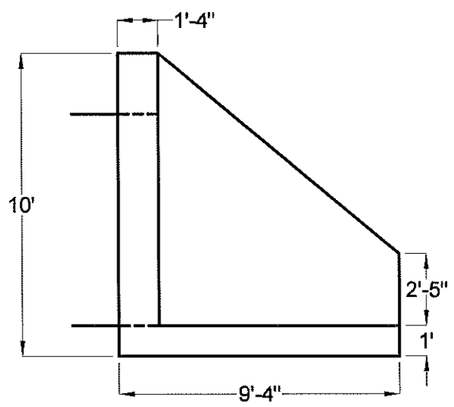

B / B20 HEADWALL ELEVATION

DO NOT SCALE

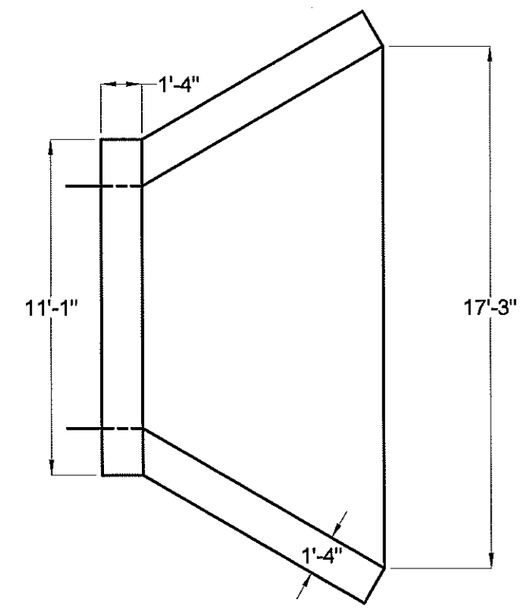

C / B20 HEADWALL PLAN

DO NOT SCALE

NO.	DATE	REVISION	BY
00	10/2016	ORIGINAL ISSUE	ATB

JME
John M. McDonald Engineering, P.C.
a member of PRIME Group®

New York Office
7 South Church Street Schenectady, New York 12305
Ph: 518 382 1774 Fax: 518 382 1776
www.mcdonaldengineers.com www.primeeng.com

PROJ. ENGR.: ATB | DRAWN BY: BSN | CHECKED BY: JMM

JOHN M. MCDONALD LICENSED PROFESSIONAL ENGINEER NO. 54556 STATE OF NEW YORK

UNAUTHORIZED ALTERATIONS TO THIS DOCUMENT IS A VIOLATION OF SECTION 7209 SUBDIVISION 2 OF NEW YORK STATE EDUCATION LAW

MONTGOMERY COUNTY

CULVERT REPLACEMENT

CONTRACT NO. 3 - TOWN OF AMSTERDAM CULVERT REPLACEMENT
CONTRACT NO. 4 - TOWN OF FLORIDA CULVERT REPLACEMENT

SHEET TITLE:

PATTERSONVILLE ROAD PROFILE

SCALE: AS SHOWN

FILE NO.: 134-1601-263

DATE: OCTOBER 2016

SHEET NO.: B20

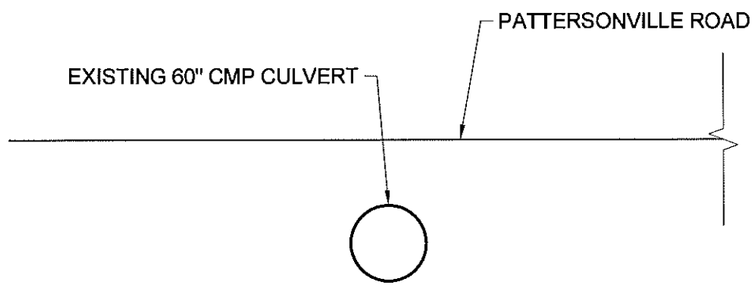

A / B21 EXISTING CROSS SECTION

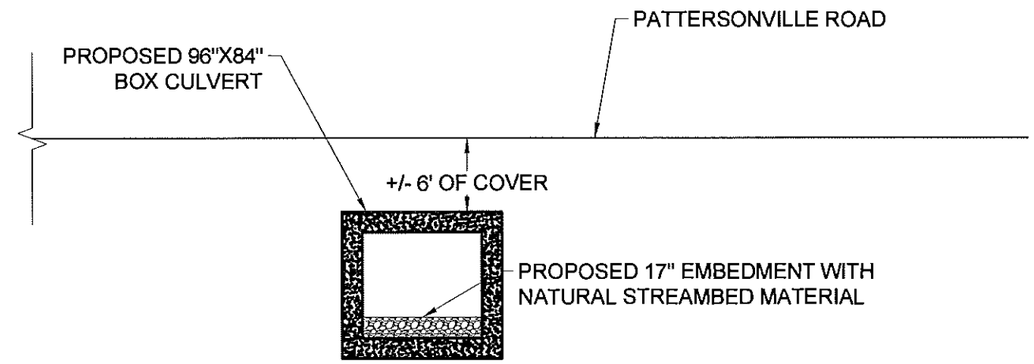

B / B21 PROPOSED CROSS SECTION

NO.	DATE	REVISION	BY
00	10/2016	ORIGINAL ISSUE	ATB

JME
John M. McDonald Engineering, P.C.
a member of PRIME Group®
New York Office
7 South Church Street Schenectady, New York 12305
Ph: 518 382 1774 Fax: 518 382 1776
www.mcdonaldengineers.com www.primeeng.com

PROJ. ENGR.: ATB | DRAWN BY: BSN | CHECKED BY: JMM

UNAUTHORIZED ALTERATIONS TO THIS DOCUMENT IS A VIOLATION OF SECTION 7209 SUBDIVISION 2 OF NEW YORK STATE EDUCATION LAW

MONTGOMERY COUNTY

CULVERT REPLACEMENT

CONTRACT NO. 3 - TOWN OF AMSTERDAM CULVERT REPLACEMENT
CONTRACT NO. 4 - TOWN OF FLORIDA CULVERT REPLACEMENT

SHEET TITLE:

PATTERSONVILLE ROAD CROSS SECTIONS

SCALE: AS SHOWN

FILE NO.: 134-1601-266

DATE: OCTOBER 2016

SHEET NO.: B21

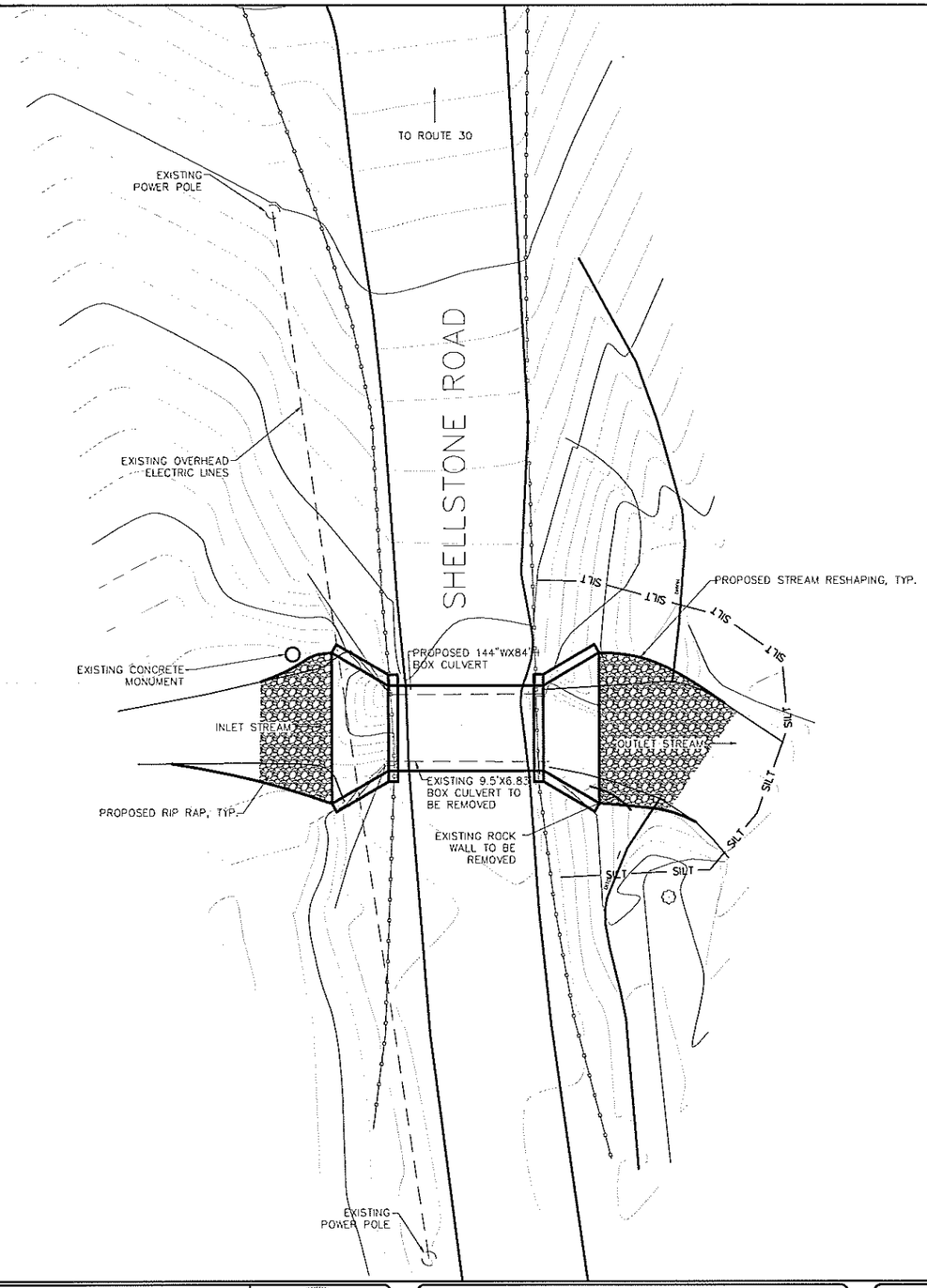

GRAPHIC SCALE
10.0 0 5.0 10.0 20.0

NO.	DATE	REVISION	BY
00	10/2016	ORIGINAL ISSUE	ATB

JME
John M. McDonald Engineering, P.C.
a member of PRIME Group
New York Office
7 South Church Street Schenectady, New York 12305
Ph: 518 382 1774 Fax: 518 382 1776
www.mcdonaldengineers.com www.primeeng.com

PROJ. ENGR.: ATB | DRAWN BY: BSN | CHECKED BY: JMM

JOHN M. MCDONALD NO. 54506 LICENSED PROFESSIONAL ENGINEER STATE OF NEW YORK

UNAUTHORIZED ALTERATIONS TO THIS DOCUMENT IS A VIOLATION OF SECTION 7209 SUBDIVISION 2 OF NEW YORK STATE EDUCATION LAW

MONTGOMERY COUNTY

CULVERT REPLACEMENT

CONTRACT NO. 3 - TOWN OF AMSTERDAM CULVERT REPLACEMENT
CONTRACT NO. 4 - TOWN OF FLORIDA CULVERT REPLACEMENT

SHEET TITLE:

SHELLSTONE ROAD
SITE PLAN

SCALE: AS SHOWN
FILE NO.: 134-1601-270
DATE: OCTOBER 2016
SHEET NO.: B22

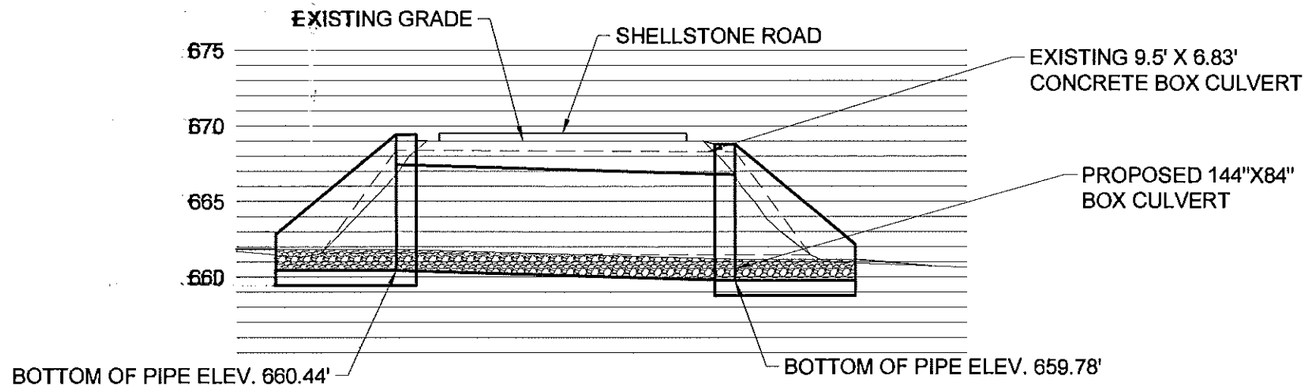

A / B23 SHELLSTONE ROAD BOX CULVERT PROFILE

GRAPHIC SCALE
5.0 0 2.5 5.0 10.0

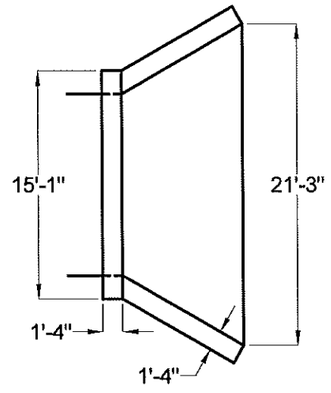

B / B23 HEADWALL PLAN

DO NOT SCALE

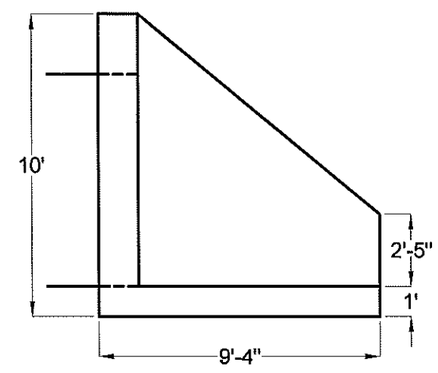

C / B23 HEADWALL ELEVATION

DO NOT SCALE

NO.	DATE	REVISION	BY
00	10/2016	ORIGINAL ISSUE	ATB

JME
John M. McDonald Engineering, P.C.
a member of PRIME Group
New York Office
7 South Church Street Schenectady, New York 12305
Ph: 518 382 1774 Fax: 518 382 1776
www.mcdonaldengineers.com www.primeeng.com

PROJ. ENGR.: ATB | DRAWN BY: BSN | CHECKED BY: JMM

LICENSED PROFESSIONAL ENGINEER JOHN M. McDONALD NO. 54928 STATE OF NEW YORK

UNAUTHORIZED ALTERATIONS TO THIS DOCUMENT IS A VIOLATION OF SECTION 7209 SUBDIVISION 2 OF NEW YORK STATE EDUCATION LAW

MONTGOMERY COUNTY

CULVERT REPLACEMENT

CONTRACT NO. 3 - TOWN OF AMSTERDAM CULVERT REPLACEMENT
CONTRACT NO. 4 - TOWN OF FLORIDA CULVERT REPLACEMENT

SHEET TITLE:

SHELLSTONE ROAD PROFILE

SCALE: AS SHOWN

FILE NO.: 134-1601-273

DATE: OCTOBER 2016

SHEET NO.: B23

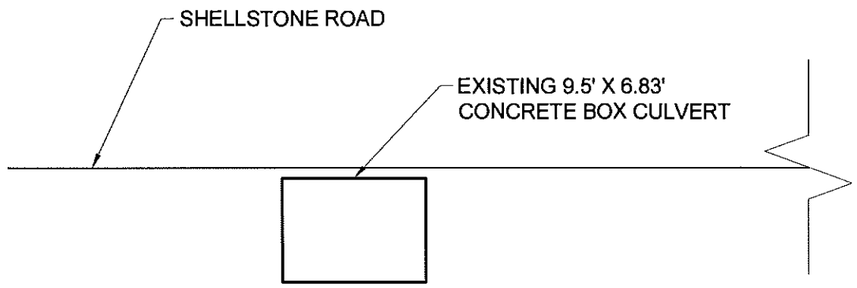

A
B24
EXISTING CROSS SECTION

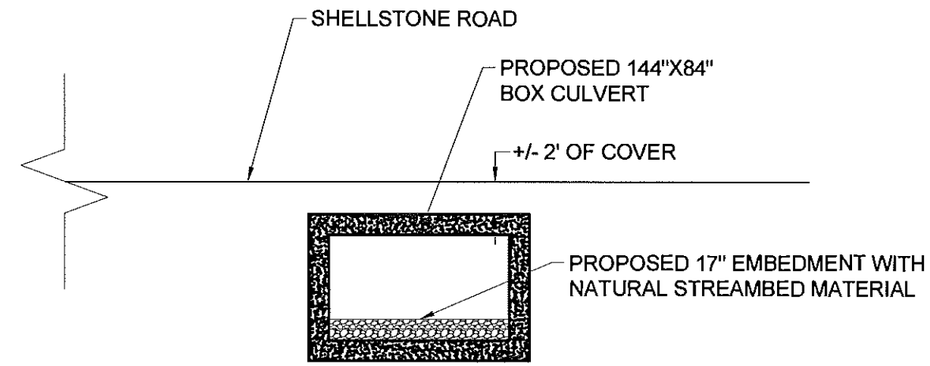

B
B24
PROPOSED CROSS SECTION

NO.	DATE	REVISION	BY
00	10/2016	ORIGINAL ISSUE	ATB

JME
John M. McDonald Engineering, P.C.
a member of PRIME Group®
New York Office
7 South Church Street Schenectady, New York 12305
Ph: 518 382 1774 Fax: 518 382 1776
www.mcdonaldengineers.com www.primeeng.com

PROJ. ENGR.: ATB | DRAWN BY: BSN | CHECKED BY: JMM

UNAUTHORIZED ALTERATIONS TO THIS DOCUMENT IS A VIOLATION OF SECTION 7209 SUBDIVISION 2 OF NEW YORK STATE EDUCATION LAW

MONTGOMERY COUNTY

CULVERT REPLACEMENT

CONTRACT NO. 3 - TOWN OF AMSTERDAM CULVERT REPLACEMENT
CONTRACT NO. 4 - TOWN OF FLORIDA CULVERT REPLACEMENT

SHEET TITLE:

SHELLSTONE ROAD
CROSS SECTIONS

SCALE: AS SHOWN
FILE NO.: 134-1601-276
DATE: OCTOBER 2016
SHEET NO.: B24

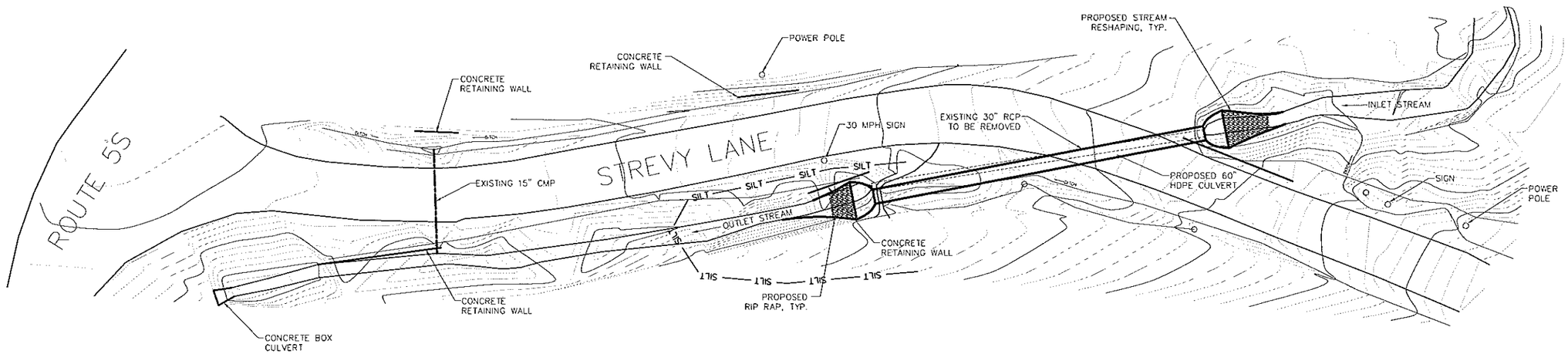

GRAPHIC SCALE
20.0 0 10.0 20.0 40.0

NO.	DATE	REVISION	BY
00	10/2016	ORIGINAL ISSUE	ATB

JME
John M. McDonald Engineering, P.C.
a member of PRIME Group®
New York Office
7 South Church Street Schenectady, New York 12305
Ph: 518 382 1774 Fax: 518 382 1776
www.mcdonaldengineers.com www.primeeng.com

PROJ. ENGR.: ATB | DRAWN BY: BSN | CHECKED BY: JMM

JOHN M. McDONALD LICENSED PROFESSIONAL ENGINEER NO. 54956 STATE OF NEW YORK

UNAUTHORIZED ALTERATIONS TO THIS DOCUMENT IS A VIOLATION OF SECTION 7209 SUBDIVISION 2 OF NEW YORK STATE EDUCATION LAW

MONTGOMERY COUNTY

CULVERT REPLACEMENT

CONTRACT NO. 3 - TOWN OF AMSTERDAM CULVERT REPLACEMENT
CONTRACT NO. 4 - TOWN OF FLORIDA CULVERT REPLACEMENT

SHEET TITLE:

STREVY LANE
SITE PLAN

SCALE: AS SHOWN
FILE NO.: 134-1601-280
DATE: OCTOBER 2016
SHEET NO.: B25

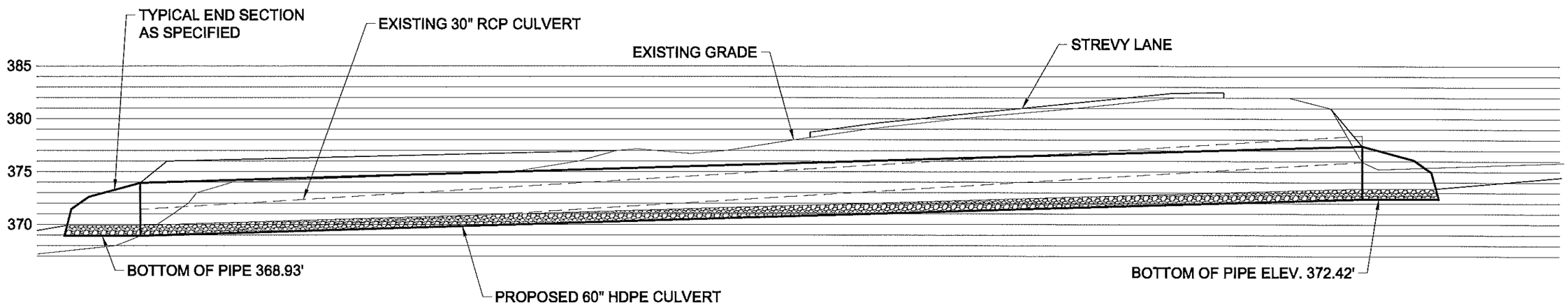

A
B26

STREVY LANE CULVERT PROFILE

GRAPHIC SCALE
5.0 0 2.5 5.0 10.0

NO.	DATE	REVISION	BY
00	10/2016	ORIGINAL ISSUE	ATB

JME
John M. McDonald Engineering, P.C.
a member of PRIME Group®
New York Office
7 South Church Street Schenectady, New York 12305
Ph: 518 382 1774 Fax: 518 382 1776
www.mcdonaldengineers.com www.primeeng.com

PROJ. ENGR.: ATB | DRAWN BY: BSN | CHECKED BY: JMM

UNAUTHORIZED ALTERATIONS TO THIS DOCUMENT IS A VIOLATION OF SECTION 7209 SUBDIVISION 2 OF NEW YORK STATE EDUCATION LAW

MONTGOMERY COUNTY

CULVERT REPLACEMENT

CONTRACT NO. 3 - TOWN OF AMSTERDAM CULVERT REPLACEMENT
CONTRACT NO. 4 - TOWN OF FLORIDA CULVERT REPLACEMENT

SHEET TITLE:
STREVY LANE PROFILE

SCALE: AS SHOWN
FILE NO.: 134-1601-283
DATE: OCTOBER 2016
SHEET NO.: B26

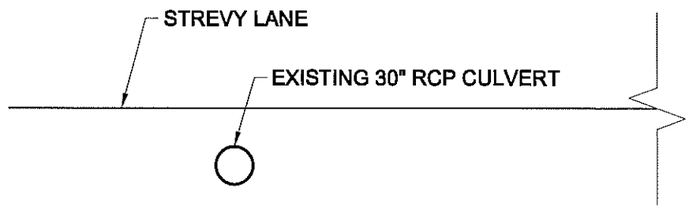

A
B27
EXISTING CROSS SECTION

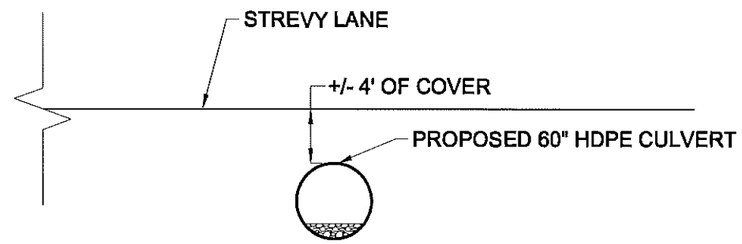

B
B27
PROPOSED CROSS SECTION

NO.	DATE	REVISION	BY
00	10/2016	ORIGINAL ISSUE	ATB

JME
John M. McDonald Engineering, P.C.
a member of PRIME Group
New York Office
7 South Church Street Schenectady, New York 12305
Ph: 518 382 1774 Fax: 518 382 1776
www.mcdonaldengineers.com www.primeeng.com

PROJ. ENGR.: ATB | DRAWN BY: BSN | CHECKED BY: JMM

UNAUTHORIZED ALTERATIONS TO THIS DOCUMENT IS A VIOLATION OF SECTION 7209 SUBDIVISION 2 OF NEW YORK STATE EDUCATION LAW

MONTGOMERY COUNTY

CULVERT REPLACEMENT

CONTRACT NO. 3 - TOWN OF AMSTERDAM CULVERT REPLACEMENT
CONTRACT NO. 4 - TOWN OF FLORIDA CULVERT REPLACEMENT

SHEET TITLE:

STREVY LANE CROSS SECTIONS

SCALE: AS SHOWN
FILE NO.: 134-1601-286
DATE: OCTOBER 2016
SHEET NO.: B27

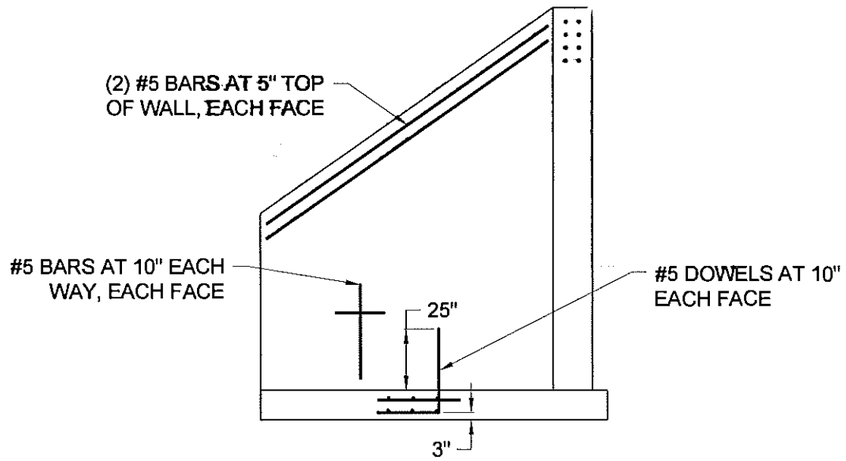

A / A4 WING WALL DETAIL
DO NOT SCALE

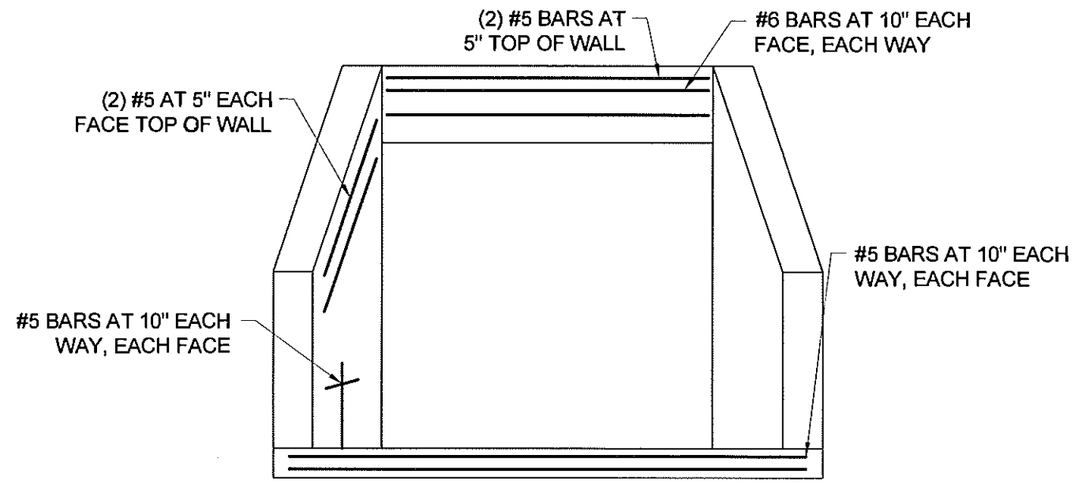

B / A4 HEAD WALL DETAIL
DO NOT SCALE

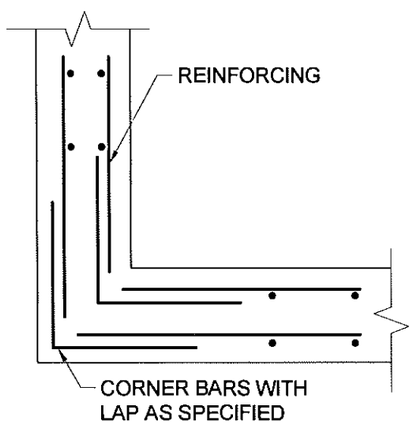

C / A4 CORNER DETAIL
DO NOT SCALE

REINFORCEMENT NOTES:

1. COVER SHALL BE 3" UNLESS NOTED OTHERWISE

2. BAR LAPS SHALL BE 40 BAR DIAMETERS UNLESS NOTED OTHERWISE

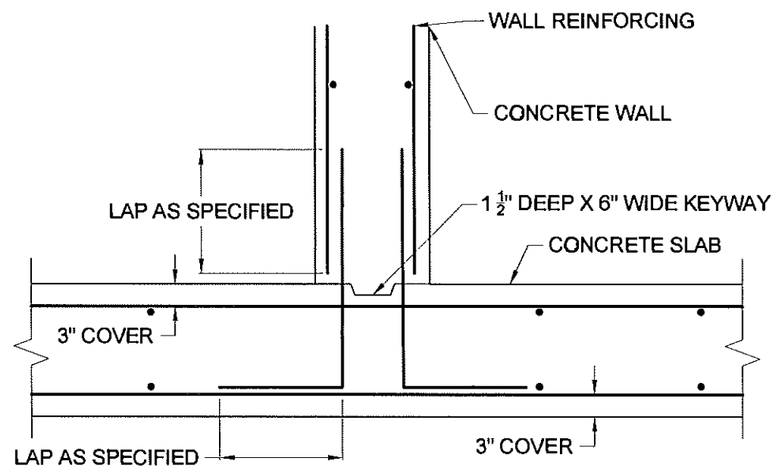

D / A4 SLAB TO WALL DETAIL
DO NOT SCALE

NO.	DATE	REVISION	BY
00	10/2016	ORIGINAL ISSUE	ATB

JME
John M. McDonald Engineering, P.C.
a member of PRIME Group
New York Office
7 South Church Street Schenectady, New York 12305
Ph: 518 382 1774 Fax: 518 382 1776
www.mcdonaldengineers.com www.primeeng.com

PROJ. ENGR.: ATB | DRAWN BY: BSN | CHECKED BY: JMM

UNAUTHORIZED ALTERATIONS TO THIS DOCUMENT IS A VIOLATION OF SECTION 7209 SUBDIVISION 2 OF NEW YORK STATE EDUCATION LAW

MONTGOMERY COUNTY

MIAMI AVENUE CULVERT REPLACEMENT

CONTRACT NO. 1 - CULVERT MATERIALS
CONTRACT NO. 2 - GENERAL CONSTRUCTION

SHEET TITLE:

CONCRETE DETAILS

SCALE: AS SHOWN
FILE NO.: 134-1601-130
DATE: OCTOBER 2016
SHEET NO.: C1

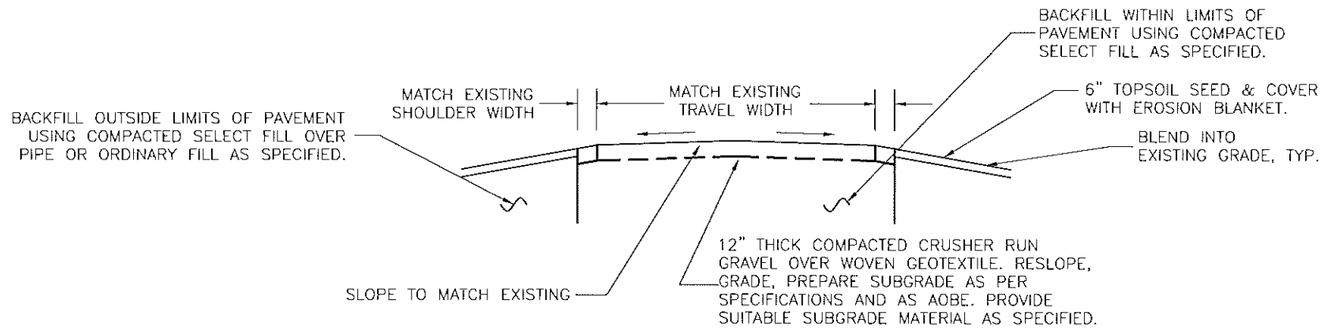

A / C2 ROADWAY DETAIL

NOT TO SCALE

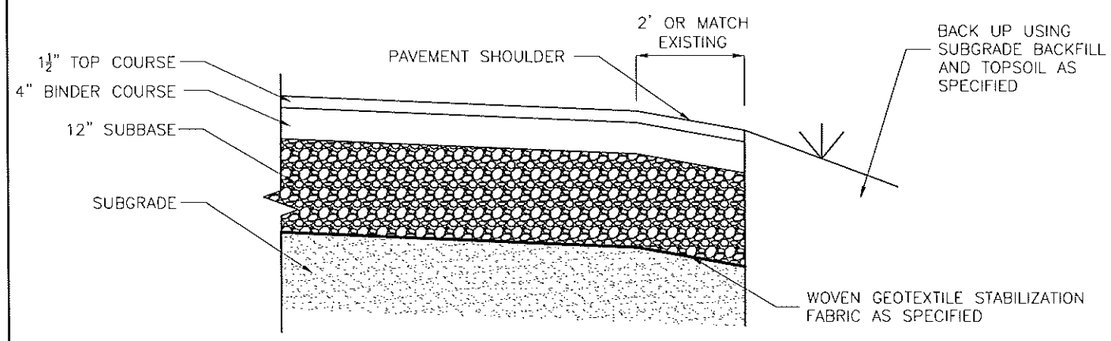

B / C2 PAVING DETAIL W/ PAVED SHOULDER

NOT TO SCALE

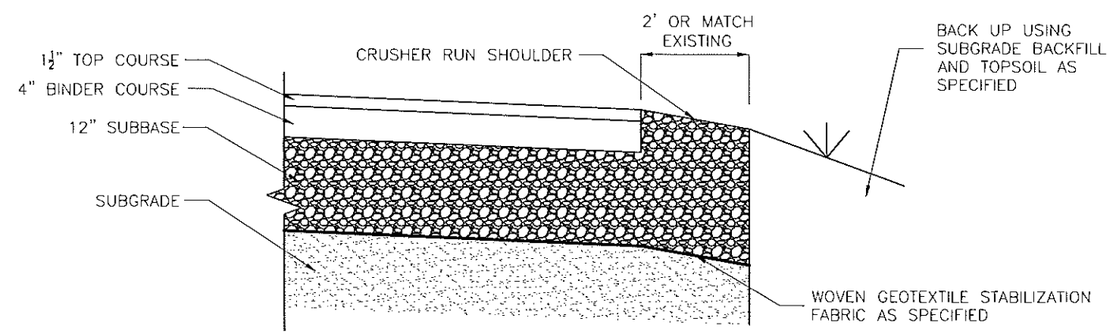

C / C2 PAVING DETAIL W/ UNPAVED SHOULDER

NOT TO SCALE

NO.	DATE	REVISION	BY
00	10/2016	ORIGINAL ISSUE	ATB

JME JOHN M. MCDONALD ENGINEERING, P.C.
7 South Church Street Schenectady, New York 12305
Ph: 518 382 1774 Fax: 518 382 1776 www.mcdonaldengineers.com

PROJ. ENGR.: ATB | DRAWN BY: BSN | CHECKED BY: JMM

UNAUTHORIZED ALTERATIONS TO THIS DOCUMENT IS A VIOLATION OF SECTION 7209 SUBDIVISION 2 OF NEW YORK STATE EDUCATION LAW

MONTGOMERY COUNTY

CULVERT REPLACEMENT

CONTRACT NO. 3 - TOWN OF AMSTERDAM CULVERT REPLACEMENT
CONTRACT NO. 4 - TOWN OF FLORIDA CULVERT REPLACEMENT

SHEET TITLE:

PAVING DETAILS

SCALE: AS SHOWN

FILE NO.: 134-1601-310

DATE: OCTOBER 2016

SHEET NO.: C2

IPaC **U.S. Fish & Wildlife Service**

IPaC resource list

Location

Montgomery County, New York

Local office

New York Ecological Services Field Office

(607) 753-9334
(607) 753-9699

3817 Luker Road
Cortland, NY 13045-9349

http://www.fws.gov/northeast/nyfo/es/section7.htm

Not for consultation

Endangered species

This resource list is for informational purposes only and should not be used for planning or analyzing project level impacts.

Section 7 of the Endangered Species Act **requires** Federal agencies to *"request of the Secretary information whether any species which is listed or proposed to be listed may be present in the area of such proposed action"* for any project that is conducted, permitted, funded, or licensed by any Federal agency.

A letter from the local office and a species list which fulfills this requirement can only be obtained by requesting an official species list either from the Regulatory Review section in IPaC or from the local field office directly.

For project evaluations that require USFWS concurrence/review, please return to the IPaC website and request an official species list by creating a project and making a request from the Regulatory Review section.

Listed species

[1] are managed by the Endangered Species Program of the U.S. Fish and Wildlife Service.

1. Species listed under the Endangered Species Act are threatened or endangered; IPaC also shows species that are candidates, or proposed, for listing. See the listing status page for more information.

The following species are potentially affected by activities in this location:

Mammals

NAME	STATUS
Northern Long-eared Bat Myotis septentrionalis **No critical habitat** has been designated for this species. http://ecos.fws.gov/ecp/species/9045	Threatened

Not for consultation

Critical habitats

Potential effects to critical habitat(s) in this location must be analyzed along with the endangered species themselves.

THERE ARE NO CRITICAL HABITATS AT THIS LOCATION.

Migratory birds

Birds are protected under the Migratory Bird Treaty Act

[1] and the Bald and Golden Eagle Protection Act[2].

Any activity that results in the take (to harass, harm, pursue, hunt, shoot, wound, kill, trap, capture, or collect, or to attempt to engage in any such conduct) of migratory birds or eagles is prohibited unless authorized by the U.S. Fish and Wildlife Service

[3]. There are no provisions for allowing the take of migratory birds that are unintentionally killed or injured.

Any person or organization who plans or conducts activities that may result in the take of migratory birds is responsible for complying with the appropriate regulations and implementing appropriate conservation measures.

---

1. The Migratory Birds Treaty Act of 1918.
2. The Bald and Golden Eagle Protection Act of 1940.
3. 50 C.F.R. Sec. 10.12 and 16 U.S.C. Sec. 668(a)

Additional information can be found using the following links:

- Birds of Conservation Concern http://www.fws.gov/birds/management/managed-species/birds-of-conservation-concern.php
- Conservation measures for birds http://www.fws.gov/birds/management/project-assessment-tools-and-guidance/conservation-measures.php
- Year-round bird occurrence data http://www.birdscanada.org/birdmon/default/datasummaries.jsp

Not for consultation

The migratory birds species listed below are species of particular conservation concern (e.g. Birds of Conservation Concern) that may be potentially affected by activities in this location, not a list of every bird species you may find in this location. Although it is important to try to avoid and minimize impacts to all birds, special attention should be made to avoid and minimize impacts to birds of priority concern. To view available data on other bird species that may occur in your project area, please visit the AKN Histogram Tools and Other Bird Data Resources.

NAME	SEASON(S)
American Bittern *Botaurus lentiginosus* http://ecos.fws.gov/ecp/species/6582	Breeding
Bald Eagle *Haliaeetus leucocephalus* http://ecos.fws.gov/ecp/species/1626	Year-round

Black-billed Cuckoo Coccyzus erythropthalmus http://ecos.fws.gov/ecp/species/9399	Breeding
Black-crowned Night-heron Nycticorax nycticorax http://ecos.fws.gov/ecp/species/6487	Breeding
Blue-winged Warbler Vermivora pinus	Breeding
Canada Warbler Wilsonia canadensis	Breeding
Golden-winged Warbler Vermivora chrysoptera http://ecos.fws.gov/ecp/species/8745	Breeding
Olive-sided Flycatcher Contopus cooperi http://ecos.fws.gov/ecp/species/3914	Breeding
Peregrine Falcon Falco peregrinus http://ecos.fws.gov/ecp/species/8831	Breeding
Pied-billed Grebe Podilymbus podiceps	Breeding
Prairie Warbler Dendroica discolor	Breeding
Red-headed Woodpecker Melanerpes erythrocephalus	Breeding
Short-eared Owl Asio flammeus http://ecos.fws.gov/ecp/species/9295	Wintering
Willow Flycatcher Empidonax traillii http://ecos.fws.gov/ecp/species/3482	Breeding
Wood Thrush Hylocichla mustelina	Breeding

Not for consultation

What does IPaC use to generate the list of migratory bird species potentially occurring in my specified location?

Landbirds:

Migratory birds that are displayed on the IPaC species list are based on ranges in the latest edition of the National Geographic Guide, Birds of North America (6th Edition, 2011 by Jon L. Dunn, and Jonathan Alderfer). Although these ranges are coarse in nature, a number of U.S. Fish and Wildlife Service migratory bird biologists agree that these maps are some of the best range maps to date. These ranges were clipped to a specific Bird Conservation Region (BCR) or USFWS Region/Regions, if it was indicated in the 2008 list of Birds of Conservation Concern (BCC) that a species was a BCC species only in a particular Region/Regions. Additional modifications have been made to some ranges based on more local or refined range information and/or information provided by U.S. Fish and Wildlife Service biologists with species expertise. All migratory birds that show in areas on land in IPaC are those that appear in the 2008 Birds of Conservation Concern report.

Atlantic Seabirds:

Ranges in IPaC for birds off the Atlantic coast are derived from species distribution models developed by the National Oceanic and Atmospheric Association (NOAA) National Centers for Coastal Ocean Science (NCCOS) using the best available seabird survey data for the offshore Atlantic Coastal region to date. NOAANCCOS assisted USFWS in developing seasonal species ranges from their models for specific use in IPaC. Some of these birds are not BCC species but were of interest for inclusion because they may occur in high abundance off the coast at different times throughout the year, which potentially makes them more susceptible to certain types of development and activities taking place in that area. For more refined details about the abundance and richness of bird species within your project area off the Atlantic Coast, see the Northeast Ocean Data Portal. The Portal also offers data and information about other types of taxa that may be helpful in your project review.

About the NOAANCCOS models: the models were developed as part of the NOAANCCOS project: Integrative Statistical Modeling and Predictive Mapping of Marine Bird Distributions and Abundance on the Atlantic Outer Continental Shelf. The models resulting from this project are being used in a number of decision-support/mapping products in order to help guide decision-making on activities off the Atlantic Coast with the goal of reducing impacts to migratory birds. One such product is the Northeast Ocean Data Portal, which can be used to explore details about the relative occurrence and abundance of bird species in a particular area off the Atlantic Coast.

All migratory bird range maps within IPaC are continuously being updated as new and better information becomes available.

Not for consultation

Can I get additional information about the levels of occurrence in my project area of specific birds or groups of birds listed in IPaC?

Landbirds:

The Avian Knowledge Network (AKN) provides a tool currently called the "Histogram Tool", which draws from the data within the AKN (latest,survey, point count, citizen science datasets) to create a view of relative abundance of species within a particular location over the course of the year. The results of the tool depict the frequency of detection of a species in survey events, averaged between multiple datasets within AKN in a particular week of the year. You may access the histogram tools through the Migratory Bird Programs AKN Histogram Tools webpage.

The tool is currently available for 4 regions (California, Northeast U.S., Southeast U.S. and Midwest), which encompasses the following 32 states: Alabama, Arkansas, California, Connecticut, Delaware, Florida, Georgia, Illinois, Indiana, Iowa, Kentucky, Louisiana, Maine, Maryland, Massachusetts, Michigan, Minnesota, Mississippi, Missouri, New Hampshire, New Jersey, New York, North, Carolina, Ohio, Pennsylvania, Rhode Island, South Carolina, Tennessee, Vermont, Virginia, West Virginia, and Wisconsin.

In the near future, there are plans to expand this tool nationwide within the AKN, and allow the graphs produced to appear with the list of trust resources generated by IPaC, providing you with an additional level of detail about the level of occurrence of the species of particular concern potentially occurring in your project area throughout the course of the year.

Atlantic Seabirds:

For additional details about the relative occurrence and abundance of both individual bird species and groups of bird species within your project area off the Atlantic Coast, please visit the Northeast Ocean Data Portal. The Portal also offers data and information about other taxa besides birds that may be helpful to you in your project review. Alternately, you may download the bird model results files underlying the portal maps through the NOAANCCOS Integrative Statistical Modeling and Predictive Mapping of Marine Bird Distributions and Abundance on the Atlantic Outer Continental Shelf project webpage.

Facilities

Wildlife refuges

Any activity proposed on National Wildlife Refuge lands must undergo a 'Compatibility Determination' conducted by the Refuge. Please contact the individual Refuges to discuss any questions or concerns.

Not for consultation

THERE ARE NO REFUGES AT THIS LOCATION.

Fish hatcheries

THERE ARE NO FISH HATCHERIES AT THIS LOCATION.

Wetlands in the National Wetlands Inventory

Impacts to NWI wetlands and other aquatic habitats may be subject to regulation under

Section 404 of the Clean Water Act, or other State/Federal statutes.

For more information please contact the Regulatory Program of the local U.S. Army Corps of Engineers District.

This location overlaps the following wetlands:

FRESHWATER FORESTED/SHRUB WETLAND

PFO

FRESHWATER POND

PUS

A full description for each wetland code can be found at the National Wetlands Inventory website: https://ecos.fws.gov/ipac/wetlands/decoder

Not for consultation

Data limitations

The Service's objective of mapping wetlands and deepwater habitats is to produce reconnaissance level information on the location, type and size of these resources. The maps are prepared from the analysis of high altitude imagery. Wetlands are identified based on vegetation, visible hydrology and geography. A margin of error is inherent in the use of imagery; thus, detailed on-the-ground inspection of any particular site may result in revision of the wetland boundaries or classification established through image analysis.

The accuracy of image interpretation depends on the quality of the imagery, the experience of the image analysts, the amount and quality of the collateral data and the amount of ground truth verification work conducted. Metadata should be consulted to determine the date of the source imagery used and any mapping problems.

Wetlands or other mapped features may have changed since the date of the imagery or field work. There may be occasional differences in polygon boundaries or classifications between the information depicted on the map and the actual conditions on site.

Data exclusions

Certain wetland habitats are excluded from the National mapping program because of the limitations of aerial imagery as the primary data source used to detect wetlands. These habitats include seagrasses or submerged aquatic vegetation that are found in the intertidal and subtidal zones of estuaries and nearshore coastal waters. Some deepwater reef communities (coral or tuberficid worm reefs) have also been excluded from the inventory. These habitats, because of their depth, go undetected by aerial imagery.

Data precautions

Federal, state, and local regulatory agencies with jurisdiction over wetlands may define and describe wetlands in a different manner than that used in this inventory. There is no attempt, in either the design or products of this inventory, to define the limits of proprietary jurisdiction of any Federal, state, or local government or to establish the geographical scope of the regulatory programs of government agencies. Persons intending to engage in activities involving modifications within or adjacent to wetland areas should seek the advice of appropriate federal, state, or local agencies concerning specified agency regulatory programs and proprietary jurisdictions that may affect such activities.

Not for consultation

NEW YORK STATE DEPARTMENT OF ENVIRONMENTAL CONSERVATION

Division of Fish and Wildlife, New York Natural Heritage Program
625 Broadway, Fifth Floor, Albany, NY 12233-4757
P: (518) 402-8935 | F: (518) 402-8925
www.dec.ny.gov

February 24, 2017

Alicia Shultz
Governor's Office of Storm Recovery
38-40 State Street
Albany, NY 12207

Re: Montgomery County Culvert Replacement Project -- 11 locations
County: Montgomery Town/City: Amsterdam, Florida

Dear Ms. Shultz:

In response to your recent request, we have reviewed the New York Natural Heritage Program database with respect to the above project.

We have no records of rare or state-listed animals or plants, or significant natural communities at the project sites or in their immediate vicinities.

The absence of data does not necessarily mean that rare or state-listed species, significant natural communities, or other significant habitats do not exist on or adjacent to the proposed site. Rather, our files currently do not contain information that indicates their presence. For most sites, comprehensive field surveys have not been conducted. We cannot provide a definitive statement on the presence or absence of all rare or state-listed species or significant natural communities. Depending on the nature of the project and the conditions at the project site, further information from on-site surveys or other resources may be required to fully assess impacts on biological resources.

This response applies only to known occurrences of rare or state-listed animals and plants, significant natural communities, and other significant habitats maintained in the Natural Heritage database. Your project may require additional review or permits; for information regarding other permits that may be required under state law for regulated areas or activities (e.g., regulated wetlands), please contact the NYS DEC Region 4 Office, Division of Environmental Permits, as listed at www.dec.ny.gov/about/39381.html.

Sincerely,

Nicholas Conrad
Information Resources Coordinator
New York Natural Heritage Program

NEW YORK STATE OF OPPORTUNITY | Department of Environmental Conservation

location of tree removal
Co Hwy 149
149
Covey Rd
Langley Rd
© 2016 Google
Langley and Covey Road culvert tree removal
1995
Imagery Date: 7/15/2015 42°53'40.83" N 74°10'09.28" W elev 653 ft

Northern Long-Eared Bat 4(d) Rule Streamlined Consultation Form

Federal agencies should use this form for the optional streamlined consultation framework for the northern long-eared bat (NLEB). This framework allows federal agencies to rely upon the U.S. Fish and Wildlife Service's (USFWS) January 5, 2016, intra-Service Programmatic Biological Opinion (BO) on the final 4(d) rule for the NLEB for section 7(a)(2) compliance by: (1) notifying the USFWS that an action agency will use the streamlined framework; (2) describing the project with sufficient detail to support the required determination; and (3) enabling the USFWS to track effects and determine if reinitiation of consultation is required per 50 CFR 402.16.

This form is not necessary if an agency determines that a proposed action will have no effect to the NLEB or if the USFWS has concurred in writing with an agency's determination that a proposed action may affect, but is not likely to adversely affect the NLEB (i.e., the standard informal consultation process). Actions that may cause prohibited incidental take require separate formal consultation. Providing this information does not address section 7(a)(2) compliance for any other listed species.

Information to Determine 4(d) Rule Compliance:	**YES**	**NO**
1. Does the project occur wholly outside of the WNS Zone[1]?	☐	☒
2. Have you contacted the appropriate agency[2] to determine if your project is near known hibernacula or maternity roost trees?	☒	☐
3. Could the project disturb hibernating NLEBs in a known hibernaculum?	☐	☒
4. Could the project alter the entrance or interior environment of a known hibernaculum?	☐	☒
5. Does the project remove any trees within 0.25 miles of a known hibernaculum at any time of year?	☐	☒
6. Would the project cut or destroy known occupied maternity roost trees, or any other trees within a 150-foot radius from the maternity roost tree from June 1 through July 31.	☐	☒

You are eligible to use this form if you have answered yes to question #1 **or** yes to question #2 **and** no to questions 3, 4, 5 and 6. The remainder of the form will be used by the USFWS to track our assumptions in the BO.

Agency and Applicant[3] (Name, Email, Phone No.):
Alicia Shultz
Senior Environmental Scientist
New York State Homes & Community Renewal and Governor's Office of Storm Recovery
38-40 State St., 408N, Hampton Plaza, Albany, NY 12207
(518) 474-0647 | cell (917) 376-9003 Alicia.Shultz@nyshcr.org |
Project Name: Montgomery County Culvert Replacement

Project Location (include coordinates if known):
Montgomery County is proposing to replace 11 existing culverts in the Town of Florida and the Town of Amsterdam, at the following locations:

[1] http://www.fws.gov/midwest/endangered/mammals/nleb/pdf/WNSZone.pdf
[2] See http://www.fws.gov/midwest/endangered/mammals/nleb/nhisites.html
[3] If applicable - only needed for federal actions with applicants (e.g., for a permit, etc.) who are party to the consultation.

- Culvert 4A at McKinney Road, approximately 1,600 feet north of Lost Valley Road in the Town of Florida;
- Culvert 4B at McKinney Road, approximately 3,200 feet north of Peck Road in the Town of Florida;
- Culvert 5B at Bullshead Road, approximately 450 feet north of Thayer Road in the Town of Florida;
- Culvert 6A at Pattersonville Road, approximately 100 feet south of Bullshead Road in the Town of Florida;
- Fort Hunter Road, approximately 560 feet southeast of Morris Road in the Town of Florida;
- Hartley Road, approximately 900 feet southeast of Snooks Corners Road in the Town of Florida;
- Langley Road, approximately 700 feet southwest of Thayer Road in the Town of Florida;
- McKay Road No. 1 at McKay Road, approximately 600 feet south of McDonald Drive in the Town of Amsterdam;
- McKay Road No. 2 at McKay Road, approximately 2,000 feet south of McDonald Drive in the Town of Amsterdam;
- Strevy Lane, approximately 1,100 feet northwest of its intersection with Fort Hunter Road in the Town of Florida; and
- Shellstone Road, approximately 200 feet southwest of State Route 30/Sulphur Springs Road in the Town of Florida.

Basic Project Description (provide narrative below or attach additional information):
Montgomery County is proposing to replace 11 existing culverts in the Town of Florida and the Town of Amsterdam. The Project is designed to reduce flooding and mitigate stream bank and roadway erosion that may result from rainfall that could not be accommodated by the existing undersized culverts. The smaller culverts would be made of high density polyethylene (HDPE). Many of the smaller culverts are in ditches rather than streams. Four sided precast concrete box culverts would be used for the larger culverts, for ease of construction (requiring no footings as with a three sided, open bottom culvert), reduced scour concerns, and lower costs. Each culvert bottom would be filled to an appropriate depth with natural streambed material (embedment). Roadway restoration would be considered. It is anticipated that construction would involve substantial earthwork, which would occur within the existing rights-of-way of each road.

General Project Information	**YES**	**NO**
Does the project occur within 0.25 miles of a known hibernaculum?	☐	☒
Does the project occur within 150 feet of a known maternity roost tree?	☐	☒
Does the project include forest conversion[4]? (if yes, report acreage below)	☐	☒
Estimated total acres of forest conversion		
If known, estimated acres[5] of forest conversion from April 1 to October 31		
If known, estimated acres of forest conversion from June 1 to July 31[6]		
Does the project include timber harvest? (if yes, report acreage below)	☐	☒

[4] Any activity that temporarily or permanently removes suitable forested habitat, including, but not limited to, tree removal from development, energy production and transmission, mining, agriculture, etc. (see page 48 of the BO).
[5] If the project removes less than 10 trees and the acreage is unknown, report the acreage as less than 0.1 acre.
[6] If the activity includes tree clearing in June and July, also include those acreage in April to October.

Estimated total acres of timber harvest		
If known, estimated acres of timber harvest from April 1 to October 31		
If known, estimated acres of timber harvest from June 1 to July 31		
Does the project include prescribed fire? (if yes, report acreage below)	☐	☒
Estimated total acres of prescribed fire		
If known, estimated acres of prescribed fire from April 1 to October 31		
If known, estimated acres of prescribed fire from June 1 to July 31		
Does the project install new wind turbines? (if yes, report capacity in MW below)	☐	☒
Estimated wind capacity (MW)		

Agency Determination:

By signing this form, the action agency determines that this project may affect the NLEB, but that any resulting incidental take of the NLEB is not prohibited by the final 4(d) rule.

If the USFWS does not respond within 30 days from submittal of this form, the action agency may presume that its determination is informed by the best available information and that its project responsibilities under 7(a)(2) with respect to the NLEB are fulfilled through the USFWS January 5, 2016, Programmatic BO. The action agency will update this determination annually for multi-year activities.

The action agency understands that the USFWS presumes that all activities are implemented as described herein. The action agency will promptly report any departures from the described activities to the appropriate USFWS Field Office. The action agency will provide the appropriate USFWS Field Office with the results of any surveys conducted for the NLEB. Involved parties will promptly notify the appropriate USFWS Field Office upon finding a dead, injured, or sick NLEB.

Signature: Alicia Shultz _____ Date Submitted: May 19, 2017

Alicia Shultz
Community Developer - Environmental Services
Governor's Office of Storm Recovery
NYS Homes and Community Renewal

United States Department of the Interior

FISH AND WILDLIFE SERVICE
New York Field Office
3817 Luker Road
Cortland, NY 13045
Phone: (607) 753-9334 Fax: (607) 753-9699
http://www.fws.gov/northeast/nyfo

To: Alicia Shultz Date: Mar 6, 2017

USFWS File No: 17TA1364

Regarding your: ___Letter ___Fax _x_Email Dated: Mar 6, 2017

For project: Montgomery County culvert replacement project

Located: 11 existing culverts at various locations

In Town/County: Towns of Amsterdam & Florida, Montgomery County

Pursuant to the Endangered Species Act of 1973 (ESA) (87 Stat. 884, as amended; 16 U.S.C. 1531 *et seq.*), the U.S. Fish and Wildlife Service:

_x_ Acknowledges receipt of your "no effect" and/or no impact determination. No further ESA coordination or consultation is required.

___ Acknowledges receipt of your determination. Please provide a copy of your determination and supporting materials to any involved Federal agency for their final ESA determination.

___ Is taking no action pursuant to ESA or any legislation at this time, but would like to be kept informed of project developments.

As a reminder, until the proposed project is complete, we recommend that you check our website (http://www.fws.gov/northeast/nyfo/es/section7.htm) every 90 days from the date of this letter to ensure that listed species presence/absence information for the proposed project is current. Should project plans change or if additional information on listed or proposed species or critical habitat becomes available, this determination may be reconsidered.

USFWS Contact(s): Robyn Niver

Supervisor: Anne d. Secord Date: 3/7/17

Governor's Office of
Storm Recovery

ANDREW M. CUOMO
Governor

LISA BOVA-HIATT
Executive Director

By Electronic Mail

March 6, 2017

Robyn A. Niver
Endangered Species Biologist USFWS
New York Field Office
Cortland, NY 13045

Re: Section 7 Project Review - ESA/MBTA/BGEPA Consultation for the Montgomery County Culvert Replacement Project, Towns of Florida and Amsterdam, Montgomery County, New York

Dear Ms. Niver:

The Governor's Office of Storm Recovery (GOSR), acting under the auspices of New York State Homes and Community Renewal's (HCR) Housing Trust Fund Corporation (HTFC), on behalf of the Department of Housing & Urban Development (HUD), is conducting an environmental review under HUD's environmental review regulations (24 CFR Part 58) and New York State's Environmental Quality Review Act (SEQRA) for the Montgomery County Culvert Replacement Project, located in the Towns of Florida and Amsterdam, Montgomery County, New York (see **Figure 1**). GOSR is acting as HUD's non-federal representative for the purposes of conducting consultation pursuant to Section 7 of the Endangered Species Act.

The purpose of this letter is to provide the U.S. Fish and Wildlife Service – New York Field Office (USFWS) notice of the proposed project and to document compliance with Section 7 of the Endangered Species Act (ESA) (87 Stat. 884, as amended; 16 U.S.C. 1531 et seq.), as well as the Migratory Bird Treaty Act of 1918 (MBTA) (40 Stat. 755, as amended; 16 U.S.C. 703-712), and the Bald and Golden Eagle Protection Act of 1940 (BGEPA) (54 Stat. 240, as amended; 16 U.S.C. 668-668c). As discussed below, we have reviewed the project and found that the proposed would have **No Effect** on ESA species under USFWS jurisdiction.

Program Overview: New York State experienced a number of storms (e.g., Hurricane Irene, Tropical Storm Lee, and Hurricane Sandy) that caused substantial damage over the last decade. This trend has increased the need for improved storm water management systems and mitigation of damage to transportation corridors to support storm-stricken communities. In the Towns of Florida and Amsterdam, the flood waters from Hurricane Irene eroded the banks of local creeks and caused property damage to residences. Many roads were washed out. Steep grades in the towns caused storm water runoff to flow down hillsides and collect and backup at undersized culverts. The proposed culvert replacement would mitigate the damage to the existing culverts, allowing the restored use of a damaged roadways, and would protect them from damage during future storm and would increase the towns' resiliency.

Area of Potential Effect: Montgomery County is proposing to replace 11 existing culverts in the Town of Florida and the Town of Amsterdam, at the following locations (see **Figure 1**):

- Culvert 4A at McKinney Road, approximately 1,600 feet north of Lost Valley Road in the Town of Florida;
- Culvert 4B at McKinney Road, approximately 3,200 feet north of Peck Road in the Town of Florida;
- Culvert 5B at Bullshead Road, approximately 450 feet north of Thayer Road in the Town of Florida;
- Culvert 6A at Pattersonville Road, approximately 100 feet south of Bullshead Road in the Town of Florida;
- Fort Hunter Road, approximately 560 feet southeast of Morris Road in the Town of Florida;
- Hartley Road, approximately 900 feet southeast of Snooks Corners Road in the Town of Florida;
- Langley Road, approximately 700 feet southwest of Thayer Road in the Town of Florida;
- McKay Road No. 1 at McKay Road, approximately 600 feet south of McDonald Drive in the Town of Amsterdam;
- McKay Road No. 2 at McKay Road, approximately 2,000 feet south of McDonald Drive in the Town of Amsterdam;
- Strevy Lane, approximately 1,100 feet northwest of its intersection with Fort Hunter Road in the Town of Florida; and
- Shellstone Road, approximately 200 feet southwest of State Route 30/Sulphur Springs Road in the Town of Florida.

Proposed Project Description: The Project would include replacement and realignment of 11 culverts on or along McKinney Road, Bullshead Road, Pattersonville Road, Fort Hunter Road, Hartley Road, Langley Road, McKay Road, Strevy Lane, and Shellstone Road in the Towns of Florida and Amsterdam, Montgomery County, New York. The smaller culverts would be made of high density polyethylene (HDPE) and the larger culverts would be four sided precast concrete box culverts. At several locations the project would include removal of existing headwalls, stream reshaping and installation of rip-rap at the inlet and outlet of the proposed culvert, and alignment correction. The culvert bottoms would have embedment (i.e., be filled to an appropriate depth) of natural streambed material (see attached **Preliminary Site Plans**). It is anticipated that construction would involve substantial earthwork, and temporary or permanent easements may be required. Construction would occur within the existing rights-of-way of each road to the extent feasible.

ESA, Migratory Bird Treaty Act, And Bald and Golden Eagle Protection Act Species: The USFWS, New York Ecological Services Field Office was contacted through the Information, Planning, and Conservation System (IPaC) regarding the potential presence of species under the jurisdiction of the USFWS within the project area. The IPaC review and Official Species List identified one threatened species that is potentially associated with the project site: the northern long-eared bat (NLEB) (*Myotis septentrionalis*) (see attached **Official Species List**). The IPaC review also indicated that there are several migratory birds of concern that could potentially be affected by the proposed project.

Analysis and Determination of Effects:

ESA

Montgomery County is within the Counties/Districts with White Nose Syndrome Infected Hibernacula. According to geospatial information provided by USFWS, the project site is not within 0.25 miles of known or assumed hibernacula (see **Figure 2**) for the NLEB, nor are there documented or assumed maternity roosts within 150 feet of the project site. In correspondence dated February 3, 2017, GOSR requested that the NY Natural Heritage Program (NYNHP) provide any records of occurrence of NYS-listed species in the vicinity of the project site, including the NLEB. The response received from the NYNHP on February 24, 2017, stated that it has no records of rare or state-listed animals or plants, or significant natural communities at the project site or

in its immediate vicinity. (See attached New **York Natural Heritage Program Review**.) Since the proposed project would not involve the removal of any trees, GOSR determines that this project would have **No Effect** on the NLEB. Additionally, the proposed project would not jeopardize the continued existence of ESA species or destroy or adversely modify their critical habitat. The project area is not within five miles of bat hibernacula or known maternity colonies and involves no tree removal.

MBA

GOSR has determined that the project would have no significant adverse impact on migratory birds or their habitat, since no trees would be removed. It is anticipated that passerine birds would temporarily leave the area during construction due to noise and disturbance. Extensive areas of high quality woodland habitat are available Montgomery County (see **Figure 1**).

BGEPA

The IPaC review process identified the bald eagle as having year-round habitat in Montgomery County that may be potentially affected by activities in the project area. GOSR has determined that the proposed project would have no significant adverse impact on bald eagles. The project area is not located within the vicinity of documented bald eagle breeding. As with other migratory birds, foraging bald eagles may temporarily avoid the area during construction due to noise and disturbance.

Conclusions

The proposed project would not jeopardize the continued existence of ESA species or destroy or adversely modify their critical habitat. On this basis, GOSR has determined that the proposed action would have **No Effect** on the NLEB and would have no significant adverse impact on migratory birds or bald eagles. We request your concurrence with this determination. Additionally, we request to be alerted if USFWS becomes aware of a Bald or Golden Eagle nest within 660 feet of the culvert locations (see **Figure 1**).

GOSR is submitting the above information to request acknowledgement from USFWS that they have no objections to the determination made by GOSR that the proposed project would have **No Effect** on ESA species under USFWS jurisdiction. If USFWS does not respond within 30 days from submittal of this letter, then GOSR may presume that its determination for each project is informed by the best available information and its project responsibilities under Section 7 of the ESA have been fulfilled. GOSR understands that the USFWS presumes that all activities will be implemented as described herein. GOSR will promptly report any departures from the described activities to the New York Field Office.

If you have questions or require additional information regarding this request, please contact me at (518) 474-0647 or Alicia.Shultz@nyshcr.org. Thank you for your time and consideration.

Sincerely,

Alicia Shultz
Senior Environmental Scientist
Governor's Office of Storm Recovery
NYS Homes and Community Renewal

Attachments:
Figure 1
Figure 2
Preliminary Site Plans
USFWS Official Species List
New York Natural Heritage Program Review

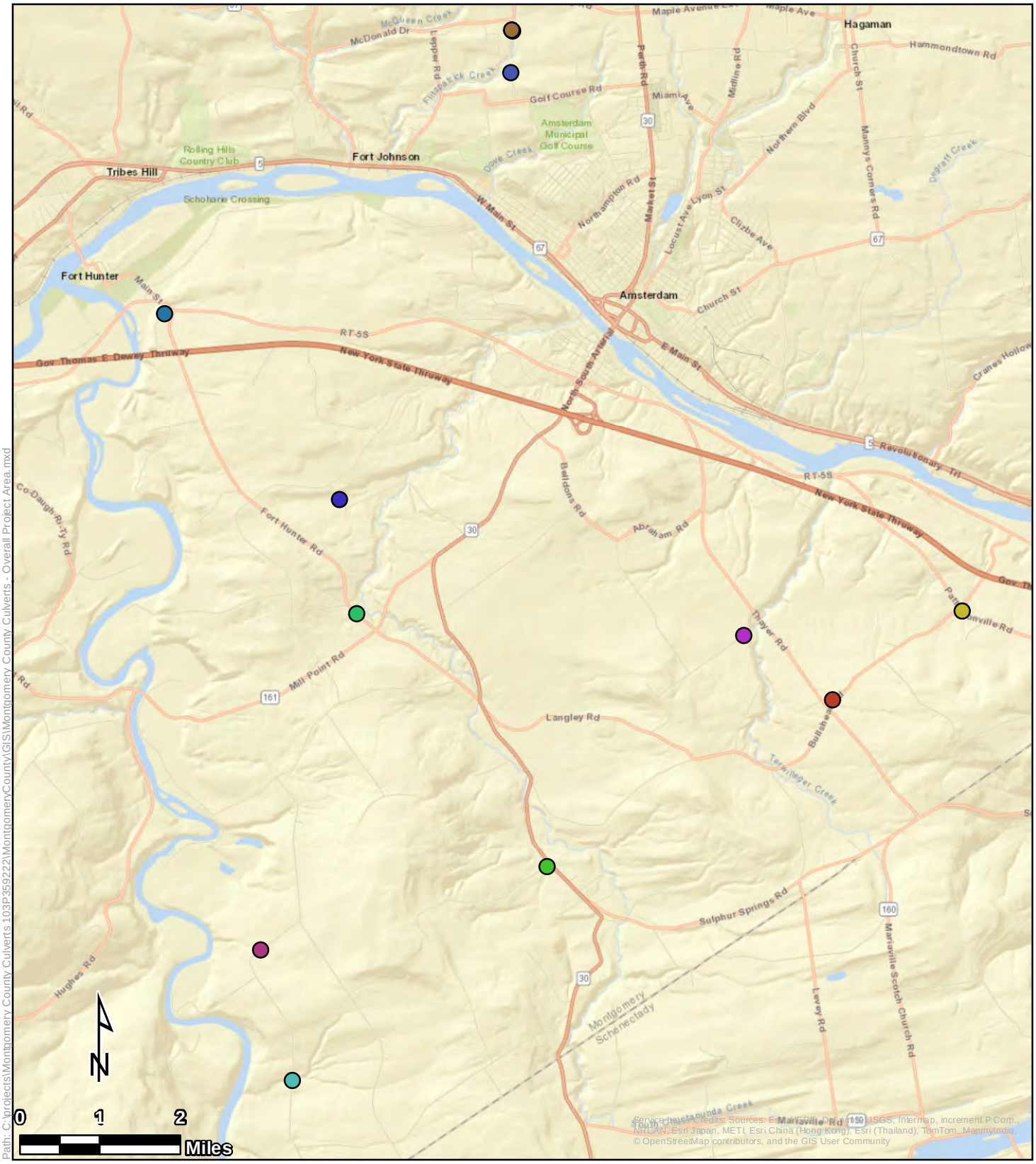

Legend

Culvert Locations

- Bullshead Road
- Fort Hunter Road
- Hartley Road
- Langley Road
- McKay Road 1
- McKay Road 2
- McKinney Road 4A
- McKinney Road 4B
- Pattersonville Road
- Shellstone Road
- Strevy Lane

Project Location Map

Montgomery County Culverts
Bullshead Road, Fort Hunter Road, Hartley Road, Langley Road, McKay Road, McKinney Road, Pattersonville Road, Shellstone Road, and Strevy Lane
Montgomery County, New York

Figure 1

Tetra Tech, Inc

Path: C:\projects\Montgomery County Culverts 109P359222\MontgomeryCounty\GIS\Montgomery County Culverts - Topographic Map.mxd

Legend

Culvert Locations

- Bullshead Road
- Fort Hunter Road
- Hartley Road
- Langley Road
- McKay Road 1
- McKay Road 2
- McKinney Road 4A
- McKinney Road 4B
- Pattersonville Road
- Shellstone Road
- Strevy Lane

Topographic Map

Montgomery County Culverts
Bullshead Road, Fort Hunter Road, Hartley Road, Langley Road, McKay Road, McKinney Road, Pattersonville Road, Shellstone Road, and Strevy Lane
Montgomery County, New York

Tetra Tech, Inc

Figure 2

MONTGOMERY COUNTY
CULVERT REPLACEMENT

CONTRACT NO. 3 - TOWN OF AMSTERDAM CULVERT REPLACEMENT
CONTRACT NO. 4 - TOWN OF FLORIDA CULVERT REPLACEMENT

COUNTY LEGISLATURE

Matthew L. Ossenfort	County Executive
Martin P. Kelly	Legislator District 1
Thomas L. Quackenbush	Legislator District 2
Roy S. Dimond	Legislator District 3
Ryan B. Weitz	Legislator District 4
Terry A. Bieniek	Legislator District 5
John M. Duchessi	Legislator District 6
Barbara S. Wheeler	Legislator District 7
Joseph M. Isabel	Legislator District 8
Robert A. Purtell	Legislator District 9
Bart A. Tessiero	Town of Amsterdam Highway Superintendent
William Weller	Town of Florida Highway Superintendent
Paul Clayburn	Commissioner of Public Works
Cheryl A. Reese	Clerk of the Legislature

JME
John M. McDonald Engineering
a member of PRIME Group®

New York Office
7 South Church Street Schenectady, New York 12305
Ph: 518 382 1774 Fax: 518 382 1776
www.mcdonaldengineers.com www.primeeng.com

LICENSED PROFESSIONAL ENGINEER
JOHN M. McDONALD
NO. 54506
STATE OF NEW YORK

Draft

REF. NO. 134-1601-000

Review Issue: October 2016

PROJECT NO. 134-1601

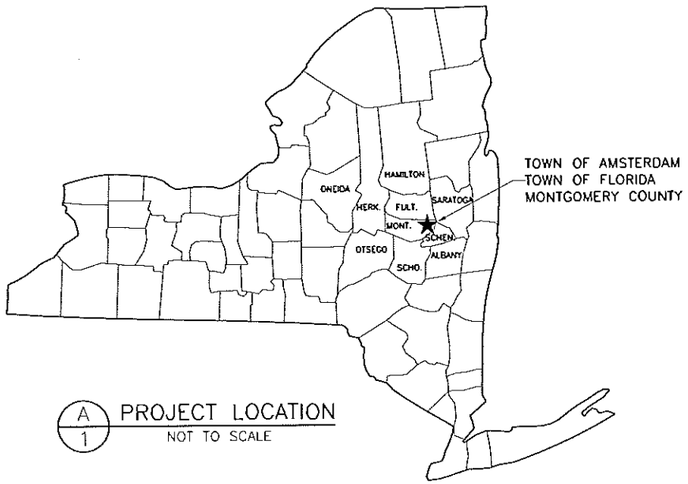

A/1 PROJECT LOCATION
NOT TO SCALE

DRAWING INDEX

SHEET #	TITLE	REFERENCE NO.	REV. NO.
	CONTRACT NO. 3 – TOWN OF AMSTERDAM CULVERT REPLACEMENT		
	CONTRACT NO. 4 – TOWN OF FLORIDA CULVERT REPLACEMENT		
	GENERAL		
1	COVER	134-1601-000	00
2	INDEX & PROJECT LOCATION	134-1601-010	00
3	CULVERT LOCATION MAP	134-1601-020	00
4	EROSION CONTROL DETAILS	134-1601-030	00
	SECTION A – TOWN OF AMSTERDAM		
A1	MCKAY ROAD 1 SITE PLAN	134-1601-100	00
A2	MCKAY ROAD 1 PROFILES	134-1601-110	00
A3	MCKAY ROAD 1 CROSS SECTIONS	134-1601-120	00
A4	MCKAY ROAD 2 SITE PLAN	134-1601-130	00
A5	MCKAY ROAD 2 PROFILE	134-1601-140	00
A6	MCKAY ROAD 2 CROSS SECTIONS	134-1601-150	00
	SECTION B – TOWN OF FLORIDA		
B1	BULLSHEAD ROAD SITE PLAN	134-1601-200	00
B2	BULLSHEAD ROAD PROFILE	134-1601-203	00
B3	BULLSHEAD ROAD CROSS SECTIONS	134-1601-206	00
B4	FORT HUNTER ROAD SITE PLAN	134-1601-210	00
B5	FORT HUNTER ROAD PROFILE	134-1601-213	00
B6	FORT HUNTER ROAD CROSS SECTIONS	134-1601-216	00
B7	HARTLEY ROAD SITE PLAN	134-1601-220	00
B8	HARTLEY ROAD PROFILE	134-1601-223	00
B9	HARTLEY ROAD CROSS SECTIONS	134-1601-226	00
B10	LANGLEY ROAD SITE PLAN	134-1601-230	00
B11	LANGLEY ROAD PROFILE	134-1601-233	00
B12	LANGLEY ROAD CROSS SECTIONS	134-1601-236	00
B13	MCKINNEY ROAD 4A SITE PLAN	134-1601-240	00
B14	MCKINNEY ROAD 4A PROFILE	134-1601-243	00
B15	MCKINNEY ROAD 4A CROSS SECTIONS	134-1601-246	00
B16	MCKINNEY ROAD 4B SITE PLAN	134-1601-250	00
B17	MCKINNEY ROAD 4B PROFILE	134-1601-253	00
B18	MCKINNEY ROAD 4B CROSS SECTIONS	134-1601-256	00
B19	PATTERSONVILLE ROAD SITE PLAN	134-1601-260	00
B20	PATTERSONVILLE ROAD PROFILE	134-1601-263	00
B21	PATTERSONVILLE ROAD CROSS SECTIONS	134-1601-266	00
B22	SHELLSTONE ROAD SITE PLAN	134-1601-270	00
B23	SHELLSTONE ROAD PROFILE	134-1601-273	00
B24	SHELLSTONE ROAD CROSS SECTIONS	134-1601-276	00
B25	STREVY LANE SITE PLAN	134-1601-280	00
B26	STREVY LANE PROFILE	134-1601-283	00
B27	STREVY LANE CROSS SECTIONS	134-1601-286	00
	SECTION C – DETAILS		
C1	CONCRETE DETAILS	134-1601-300	00
C2	PAVING DETAILS	134-1601-310	00

GENERAL CONTRACT DRAWING NOTES:

1. PROJECT SITE PLANS ARE BASED ON SURVEYS BY JOHN M. MCDONALD ENGINEERING.

2. CONTRACTOR MUST COORDINATE WORK WITH MONTGOMERY COUNTY DPW AND MINIMIZE INCONVENIENCES.

3. CONTRACTOR SHALL BE RESPONSIBLE FOR REPAIR OF ANY DAMAGE TO THE FACILITIES AND APPURTENANCES RESULTING FROM THE CONTRACTOR'S WORK AT NO COST TO OWNER.

4. ALL PRECAUTIONS SHALL BE TAKEN TO PROTECT THE ENVIRONMENT IN ACCORDANCE WITH STATE, FEDERAL AND LOCAL REGULATIONS AND AS SPECIFIED IN THE CONTRACT DOCUMENTS.

5. CONTRACTOR SHALL CONTACT DIG SAFELY NEW YORK PRIOR TO COMMENCING WORK TO DETERMINE LOCATIONS OF UNDERGROUND UTILITIES. EXISTING UTILITIES ARE SHOWN IN THEIR RELATIVE POSITIONS AND ARE FOR INFORMATION ONLY. CONTRACTOR SHALL BE RESPONSIBLE FOR REPAIR OF ANY DAMAGE TO FACILITIES RESULTING FROM THE CONTRACTORS WORK AT NO COST TO OWNER.

6. CONTRACTOR SHALL RESTORE ALL LAWNS, DRIVEWAYS, ROADS, SHOULDERS, FENCES ETC. TO A CONDITION AT LEAST AS GOOD AS THEY WERE PRIOR TO CONSTRUCTION. DAMAGE SHALL BE REPAIRED AT CONTRACTOR'S EXPENSE.

7. NO WORK, STORAGE OR TRESPASS SHALL BE PERMITTED BEYOND THE BOUNDARIES OF OWNER'S EASEMENTS OR PROPERTY.

8. CONTRACTOR IS RESPONSIBLE FOR ALL TRAFFIC CONTROL, DUST CONTROL, AND PROTECTION OF PUBLIC FROM HAZARDS ASSOCIATED WITH THIS WORK DURING WORKING AND NON-WORKING HOURS.

9. CONTRACTOR SHALL SUPPORT ALL UTILITIES & STRUCTURES WHERE NECESSARY DUE TO WORK OF THIS CONTRACT.

10. EXTENT OF WORK IS INDICATED ON CONTRACT DRAWINGS AND SPECIFICATIONS. EACH CONTRACTOR IS RESPONSIBLE TO REVIEW EXTENT OF WORK BY OTHERS AND COORDINATE THEIR OWN WORK WITH WORK BY OTHER CONTRACTORS.

NO.	DATE	REVISION	BY
00	10/2016	ORIGINAL ISSUE	ATB

JME
John M. McDonald Engineering, P.C.
a member of PRIME Group
New York Office
7 South Church Street Schenectady, New York 12305
Ph: 518 382 1774 Fax: 518 382 1776
www.mcdonaldengineers.com www.primeeng.com

PROJ. ENGR.: ATB | DRAWN BY: BSN | CHECKED BY: JMM

JOHN M. MCDONALD LICENSED PROFESSIONAL ENGINEER NO. 54306 STATE OF NEW YORK

UNAUTHORIZED ALTERATIONS TO THIS DOCUMENT IS A VIOLATION OF SECTION 7209 SUBDIVISION 2 OF NEW YORK STATE EDUCATION LAW

MONTGOMERY COUNTY

CULVERT REPLACEMENT

CONTRACT NO. 3 - TOWN OF AMSTERDAM CULVERT REPLACEMENT
CONTRACT NO. 4 - TOWN OF FLORIOA CULVERT REPLACEMENT

SHEET TITLE:

INDEX & PROJECT LOCATION

SCALE: AS SHOWN

FILE NO.: 134-1601-010

DATE: OCTOBER 2016

SHEET NO.: 2

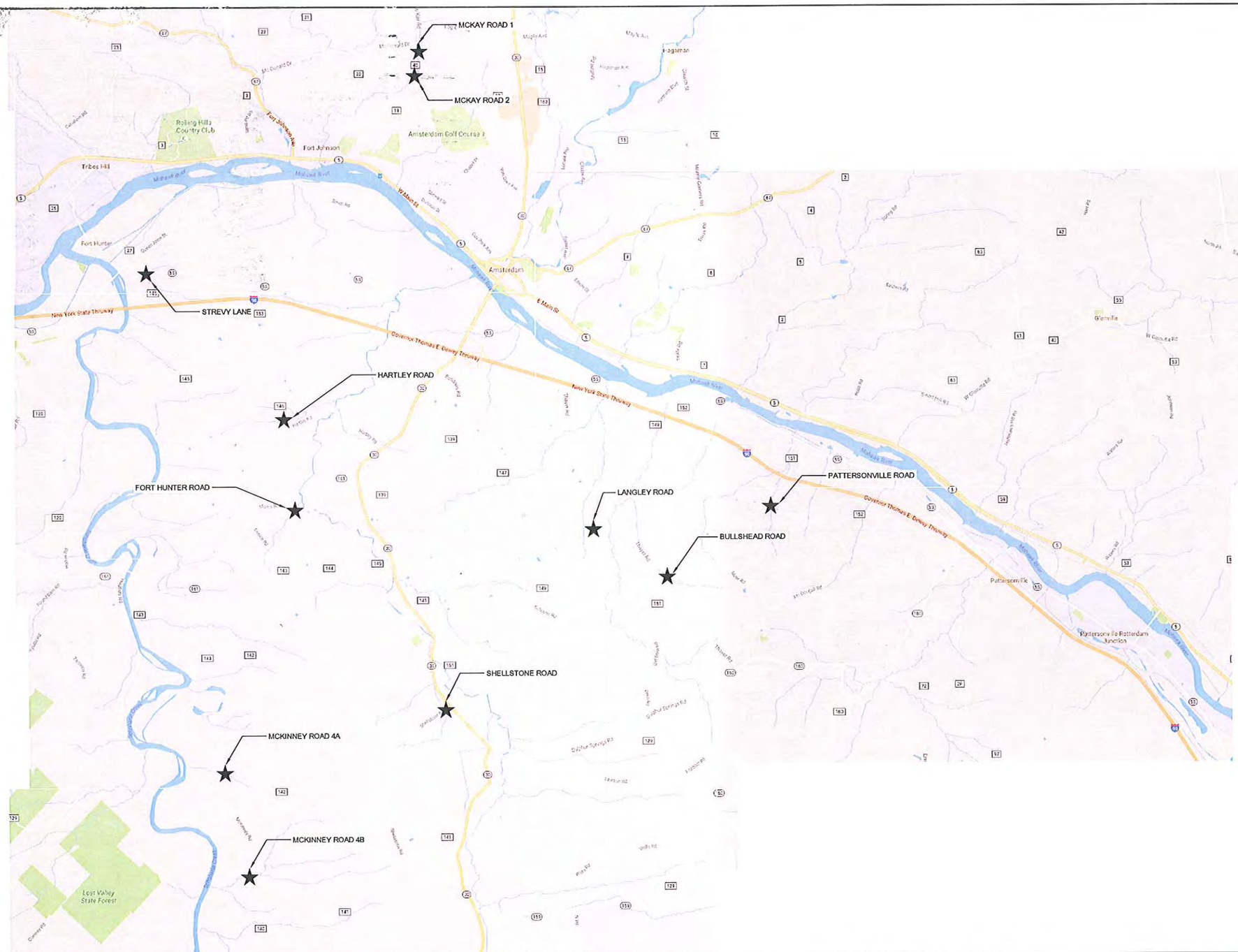

NO.	DATE	REVISION	BY
00	10/2016	ORIGINAL ISSUE	ATB

JME
John M. McDonald Engineering
a member of PRIME Group®

New York Office
7 South Church Street Schenectady, New York 12305
Ph: 518 382 1774 Fax: 518 382 1776
www.mcdonaldengineers.com www.primeeng.com

PROJ. ENGR.: ATB | DRAWN BY: BSN | CHECKED BY: JMM

JOHN M. McDONALD PROFESSIONAL ENGINEER LICENSE NO. 54508 STATE OF NEW YORK

UNAUTHORIZED ALTERATIONS TO THIS DOCUMENT IS A VIOLATION OF SECTION 7209 SUBDIVISION 2 OF NEW YORK STATE EDUCATION LAW

MONTGOMERY COUNTY

CULVERT REPLACEMENT

CONTRACT NO. 3 - TOWN OF AMSTERDAM CULVERT REPLACEMENT
CONTRACT NO. 4 - TOWN OF FLORIDA CULVERT REPLACEMENT

SHEET TITLE:

CULVERT LOCATION MAP

SCALE: AS SHOWN

FILE NO.: 134-1601

DATE: OCTOBER 2016

SHEET NO.: 3

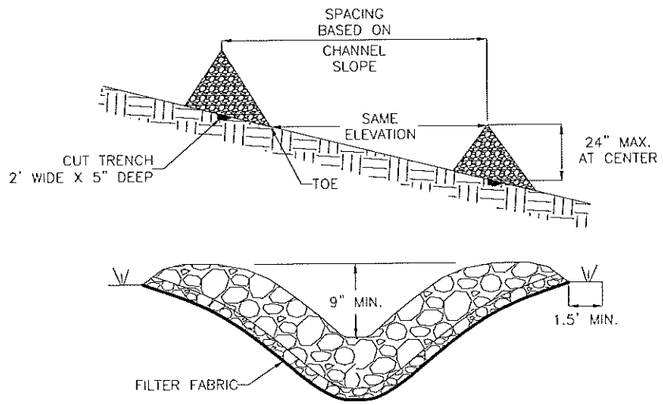

A/4 CHECK DAM DETAILS

NOT TO SCALE

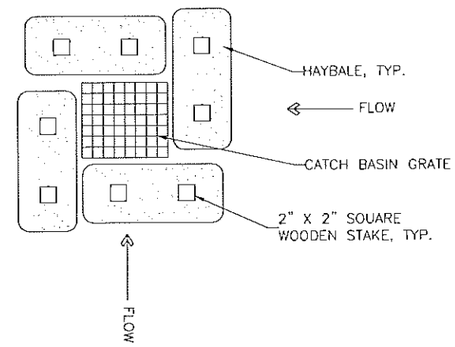

B/4 STRUCTURE EROSION CONTROL

NOT TO SCALE

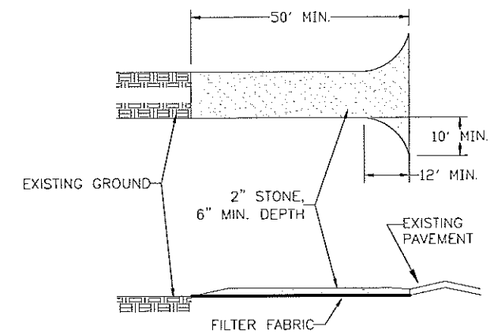

C/4 STABILIZED CONSTRUCTION ENTRANCE

NOT TO SCALE

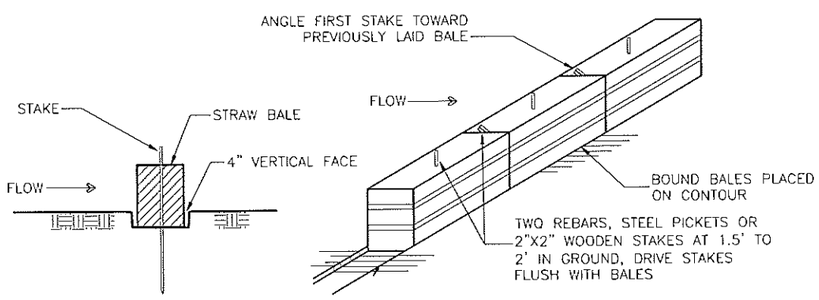

D/4 STRAW BALE DETAILS

NOT TO SCALE

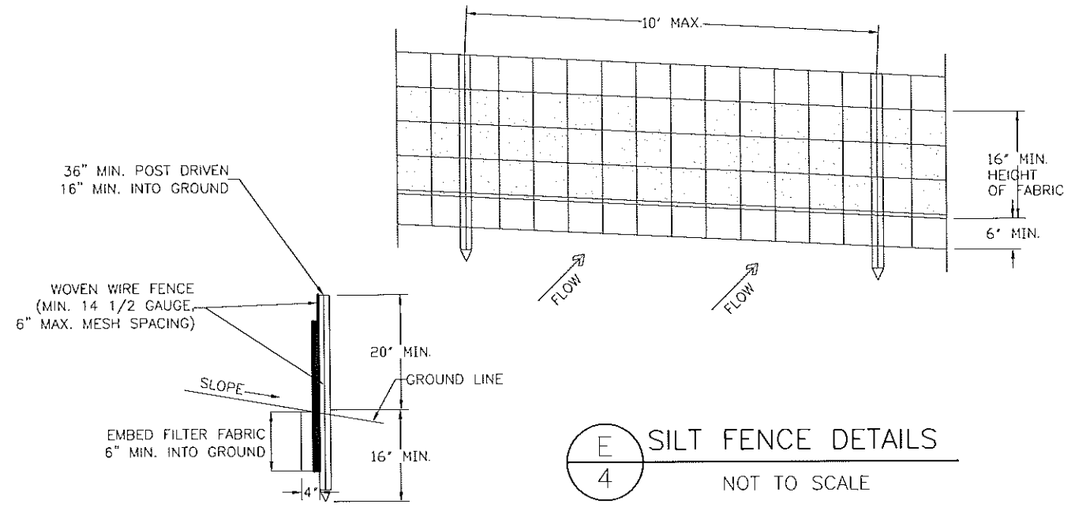

E/4 SILT FENCE DETAILS

NOT TO SCALE

SOIL EROSION AND STABILIZATION

1. DRAINAGE AREA NO MORE THAN 1/4 ACRE PER 100' OF STRAW BALE DIKE FOR SLOPES LESS THAN 25%.
2. BALES SHALL BE PLACED AT THE TOE OF SLOPE OR ON THE CONTOUR AND IN A ROW WITH ENDS TIGHTLY ABUTTING THE ADJACENT BALES.
3. EACH BALE SHALL BE EMBEDDED IN THE SOIL A MINIMUM OF 4 INCHES, AND PLACED SO THE BINDINGS ARE HORIZONTAL.
4. BALES SHALL BE SECURELY ANCHORED IN PLACE BY EITHER TWO STAKES OR RE-BARS DRIVENTHROUGH THE BALE. THE FIRST STAKE IN EACH BALE SHALL BE DRIVEN TOWARD THE PREVIOUSLY LAID BALE AT AN ANGLE TO FORCE THE BALES TOGETHER. STAKES SHALL BE DRIVEN FLUSH WITH THE BALE.
5. INSPECTION SHALL BE FREQUENT AND REPAIR REPLACEMENT SHALL BE MADE PROMPTLY AS NEEDED.
6. BALES SHALL BE REMOVED WHEN THEY HAVE SERVED THEIR USEFULNESS SO AS NOT TO BLOCK OR IMPEDE STORM FLOW OR DRAINAGE.

NO.	DATE	REVISION	BY
00	10/2016	ORIGINAL ISSUE	ATB

JME JOHN M. MCDONALD ENGINEERING, P.C.
7 South Church Street Schenectady, New York 12305
Ph: 518 382 1774 Fax: 518 382 1776 www.mcdonaldengineers.com

PROJ. ENGR.: ATB | DRAWN BY: BSN | CHECKED BY: JMM

UNAUTHORIZED ALTERATIONS TO THIS DOCUMENT IS A VIOLATION OF SECTION 7209 SUBDIVISION 2 OF NEW YORK STATE EDUCATION LAW

MONTGOMERY COUNTY

CULVERT REPLACEMENT

CONTRACT NO. 3 - TOWN OF AMSTERDAM CULVERT REPLACEMENT
CONTRACT NO. 4 - TOWN OF FLORIDA CULVERT REPLACEMENT

SHEET TITLE:

EROSION CONTROL DETAILS

SCALE: AS SHOWN

FILE NO.: 134-1601-030

DATE: OCTOBER 2016

SHEET NO.: 4

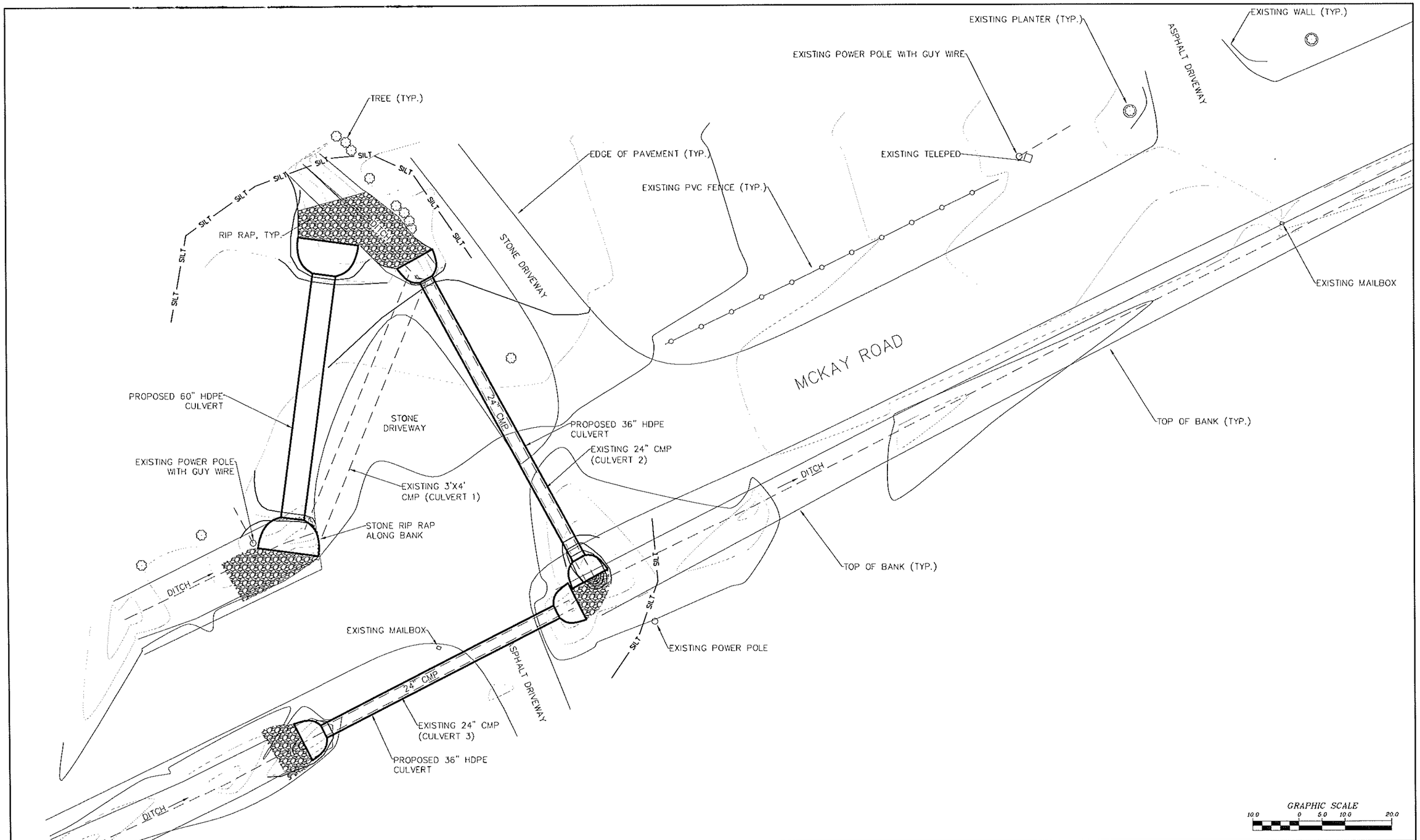

NO.	DATE	REVISION	BY
00	10/2016	ORIGINAL ISSUE	DPC

JME
John M. McDonald Engineering, P.C.
a member of PRIME Group®

New York Office
7 South Church Street Schenectady, New York 12305
Ph: 518 382 1774 Fax: 518 382 1776
www.mcdonaldengineers.com www.primeeng.com

PROJ. ENGR.: DPC | DRAWN BY: BSN | CHECKED BY: JMM

UNAUTHORIZED ALTERATIONS TO THIS DOCUMENT IS A VIOLATION OF SECTION 7209 SUBDIVISION 2 OF NEW YORK STATE EDUCATION LAW

MONTGOMERY COUNTY

CULVERT REPLACEMENT

CONTRACT NO. 3 - TOWN OF AMSTERDAM CULVERT REPLACEMENT
CONTRACT NO. 4 - TOWN OF FLORIDA CULVERT REPLACEMENT

SHEET TITLE:

MCKAY ROAD 1
SITE PLAN

SCALE: AS SHOWN

FILE NO.: 134-1601-100

DATE: OCTOBER 2016

SHEET NO.: A1

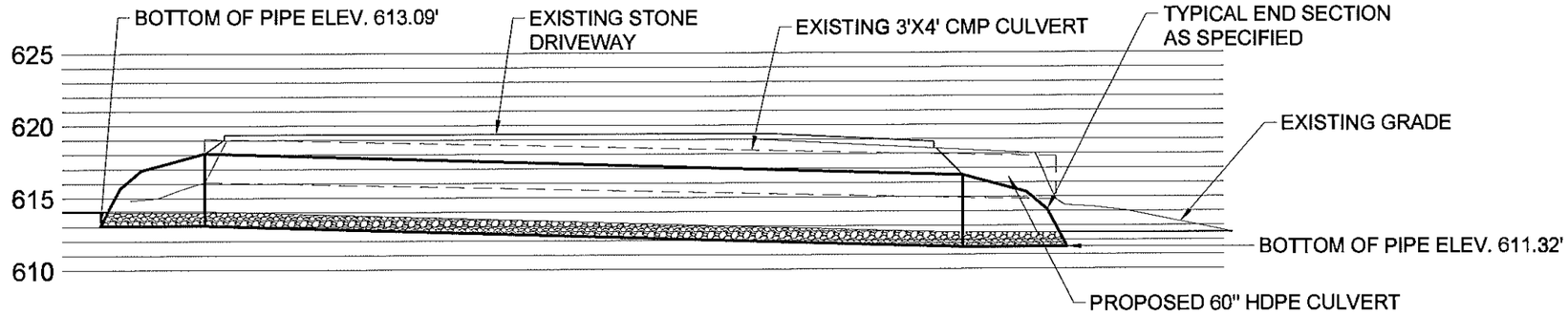

A / A2 MCKAY ROAD 1 CULVERT 1 PROFILE

GRAPHIC SCALE 5.0 0 2.5 5.0 10.0

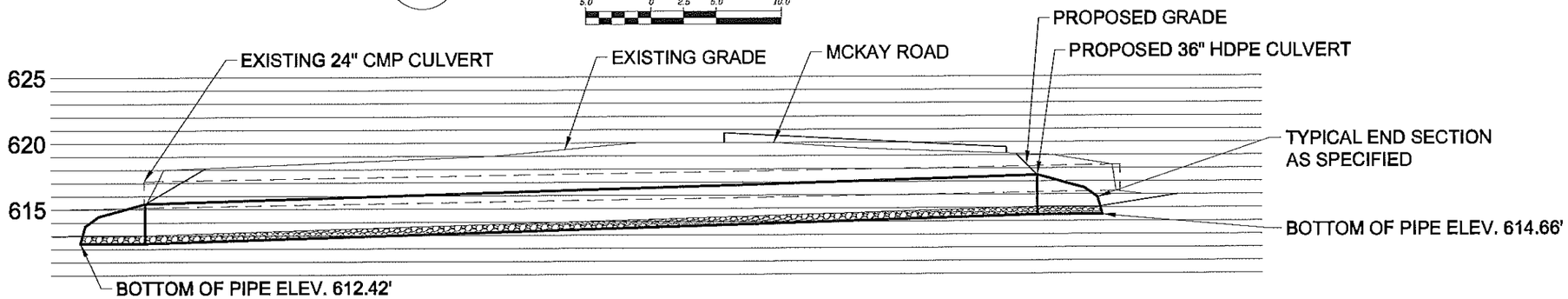

B / A2 MCKAY ROAD 1 CULVERT 2 PROFILE

GRAPHIC SCALE 5.0 0 2.5 5.0 10.0

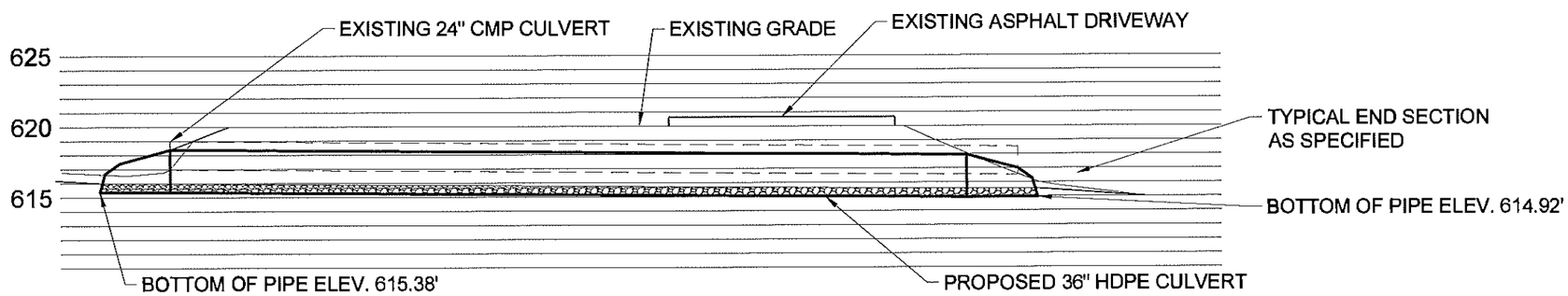

C / A2 MCKAY ROAD 1 CULVERT 3 PROFILE

GRAPHIC SCALE 5.0 0 2.5 5.0 10.0

NO.	DATE	REVISION	BY
00	10/2016	ORIGINAL ISSUE	DPC

JME
John M. McDonald Engineering, P.C.
a member of PRITER Group®
New York Office
7 South Church Street Schenectady, New York 12305
Ph: 518 382 1774 Fax: 518 382 1776
www.mcdonaldengineers.com www.priteeng.com
PROJ. ENGR.: DPC | DRAWN BY: BSN | CHECKED BY: JMM

UNAUTHORIZED ALTERATIONS TO THIS DOCUMENT IS A VIOLATION OF SECTION 7209 SUBDIVISION 2 OF NEW YORK STATE EDUCATION LAW

MONTGOMERY COUNTY

CULVERT REPLACEMENT

CONTRACT NO. 3 - TOWN OF AMSTERDAM CULVERT REPLACEMENT
CONTRACT NO. 4 - TOWN OF FLORIDA CULVERT REPLACEMENT

SHEET TITLE:

MCKAY ROAD 1 PROFILES

SCALE: AS SHOWN

FILE NO.: 134-1601-110

DATE: OCTOBER 2016

SHEET NO.: A2

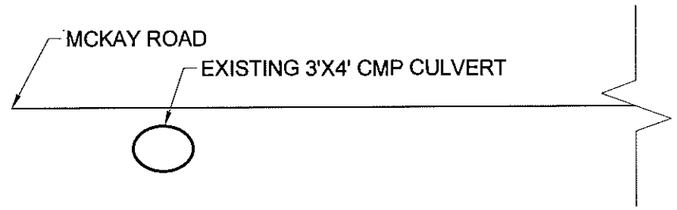

A / A3 EXISTING CULVERT 1 CROSS SECTION

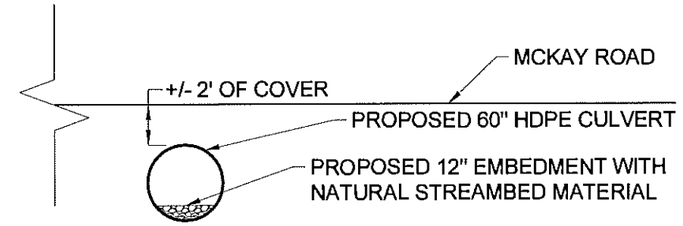

B / A3 PROPOSED CULVERT 1 CROSS SECTION

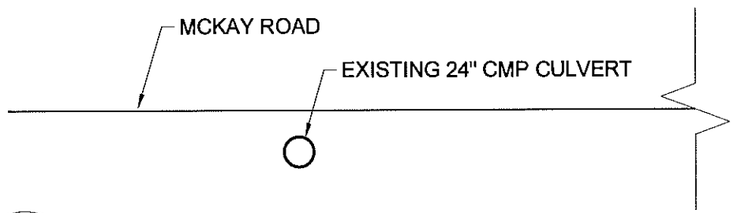

C / A3 EXISTING CULVERT 2 CROSS SECTION

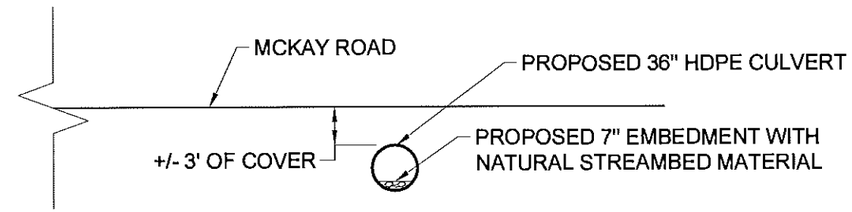

D / A3 PROPOSED CULVERT 2 CROSS SECTION

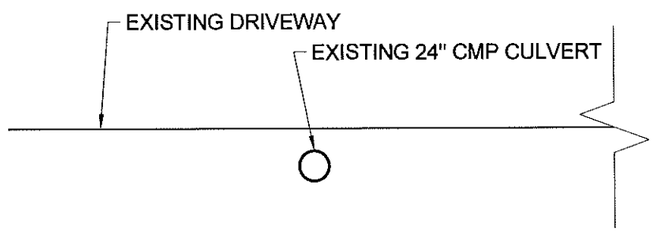

E / A3 EXISTING CULVERT 3 CROSS SECTION

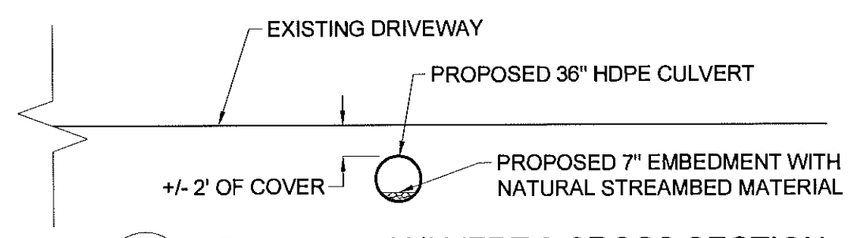

F / A3 PROPOSED CULVERT 3 CROSS SECTION

NO.	DATE	REVISION	BY
00	10/2016	ORIGINAL ISSUE	DPC

JME
John M. McDonald Engineering, P.C.
a member of PRIME Group®
New York Office
7 South Church Street Schenectady, New York 12305
Ph: 518 382 1774 Fax: 518 382 1776
www.mcdonaldengineers.com www.primeeng.com

PROJ. ENGR.: DPC | DRAWN BY: BSN | CHECKED BY: JMM

UNAUTHORIZED ALTERATIONS TO THIS DOCUMENT IS A VIOLATION OF SECTION 7209 SUBDIVISION 2 OF NEW YORK STATE EDUCATION LAW

MONTGOMERY COUNTY

CULVERT REPLACEMENT

CONTRACT NO. 3 - TOWN OF AMSTERDAM CULVERT REPLACEMENT
CONTRACT NO. 4 - TOWN OF FLORIDA CULVERT REPLACEMENT

SHEET TITLE:

MCKAY ROAD 1 CROSS SECTIONS

SCALE: AS SHOWN
FILE NO.: 134-1601
DATE: OCTOBER 2016
SHEET NO.: A3

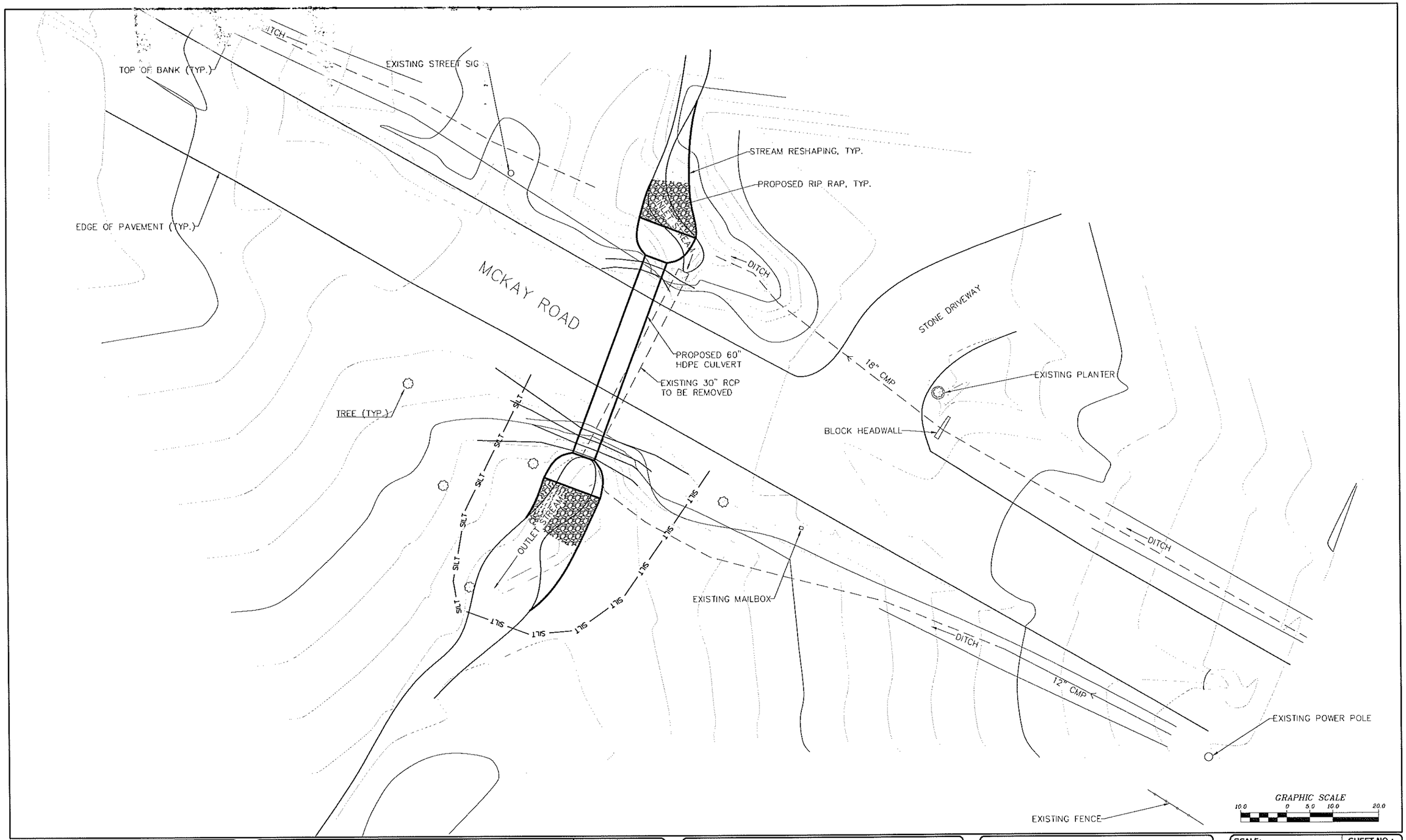

NO.	DATE	REVISION	BY
00	10/2016	ORIGINAL ISSUE	ATB

JME
John M. McDonald Engineering, P.C.
a member of PRIME Group
New York Office
7 South Church Street Schenectady, New York 12305
Ph: 518 382 1774 Fax: 518 382 1776
www.mcdonaldengineers.com www.primeeng.com

PROJ. ENGR.: ATB | DRAWN BY: BSN | CHECKED BY: JMM

LICENSED PROFESSIONAL ENGINEER JOHN M. McDONALD NO. 54566 STATE OF NEW YORK

UNAUTHORIZED ALTERATIONS TO THIS DOCUMENT IS A VIOLATION OF SECTION 7209 SUBDIVISION 2 OF NEW YORK STATE EDUCATION LAW

MONTGOMERY COUNTY

CULVERT REPLACEMENT

CONTRACT NO. 3 - TOWN OF AMSTERDAM CULVERT REPLACEMENT
CONTRACT NO. 4 - TOWN OF FLORIDA CULVERT REPLACEMENT

SHEET TITLE:

MCKAY ROAD 2
SITE PLAN

SCALE: AS SHOWN

FILE NO.: 134-1601-130

DATE: OCTOBER 2016

SHEET NO.: A4

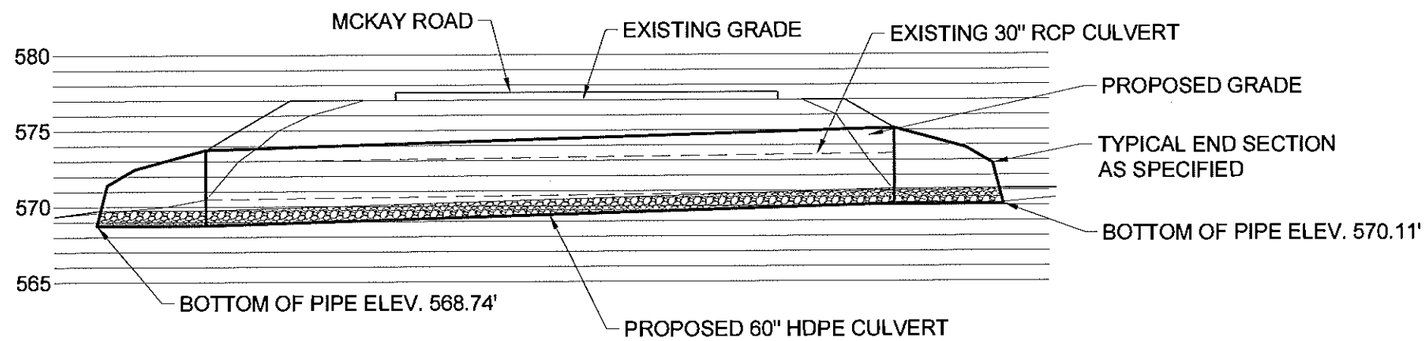

A
A5

MCKAY ROAD 2 PROFILE

GRAPHIC SCALE
5.0 0 2.5 5.0 10.0

NO.	DATE	REVISION	BY
00	10/2016	ORIGINAL ISSUE	ATB

JME
John M. McDonald Engineering, P.C.
a member of PRIME Group®
New York Office
7 South Church Street Schenectady, New York 12305
Ph: 518 382 1774 Fax: 518 382 1776
www.mcdonaldengineers.com www.primeeng.com

PROJ. ENGR.: ATB | DRAWN BY: BSN | CHECKED BY: JMM

UNAUTHORIZED ALTERATIONS TO THIS DOCUMENT IS A VIOLATION OF SECTION 7209 SUBDIVISION 2 OF NEW YORK STATE EDUCATION LAW

MONTGOMERY COUNTY

CULVERT REPLACEMENT

CONTRACT NO. 3 - TOWN OF AMSTERDAM CULVERT REPLACEMENT
CONTRACT NO. 4 - TOWN OF FLORIDA CULVERT REPLACEMENT

SHEET TITLE:
MCKAY ROAD PROFILE

SCALE: AS SHOWN
FILE NO.: 134-1601-140
DATE: OCTOBER 2016
SHEET NO.: A5

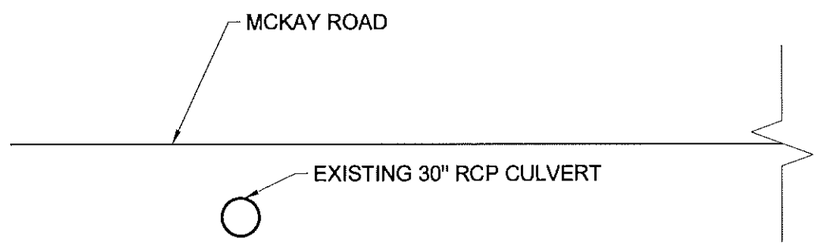

A / A6 EXISTING CROSS SECTION

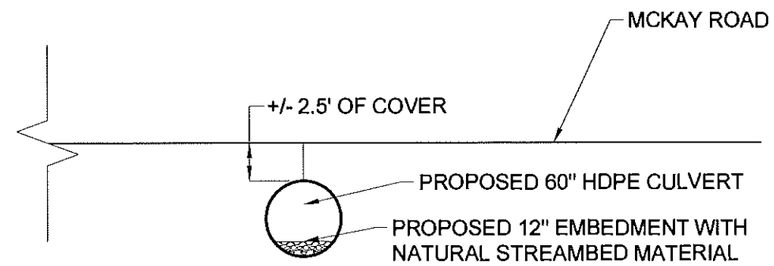

B / A6 PROPOSED CROSS SECTION

NO.	DATE	REVISION	BY
00	10/2016	ORIGINAL ISSUE	ATB

JME
John M. McDonald Engineering, P.C.
a member of PRIME Group
New York Office
7 South Church Street Schenectady, New York 12305
Ph: 518 382 1774 Fax: 518 382 1776
www.mcdonaldengineers.com www.primeeng.com

PROJ. ENGR.: ATB | DRAWN BY: BSN | CHECKED BY: JMM

UNAUTHORIZED ALTERATIONS TO THIS DOCUMENT IS A VIOLATION OF SECTION 7209 SUBDIVISION 2 OF NEW YORK STATE EDUCATION LAW

MONTGOMERY COUNTY

CULVERT REPLACEMENT

CONTRACT NO. 3 - TOWN OF AMSTERDAM CULVERT REPLACEMENT
CONTRACT NO. 4 - TOWN OF FLORIDA CULVERT REPLACEMENT

SHEET TITLE:

MCKAY ROAD CROSS SECTIONS

SCALE: AS SHOWN
FILE NO.: 134-1601-150
DATE: OCTOBER 2016
SHEET NO.: A6

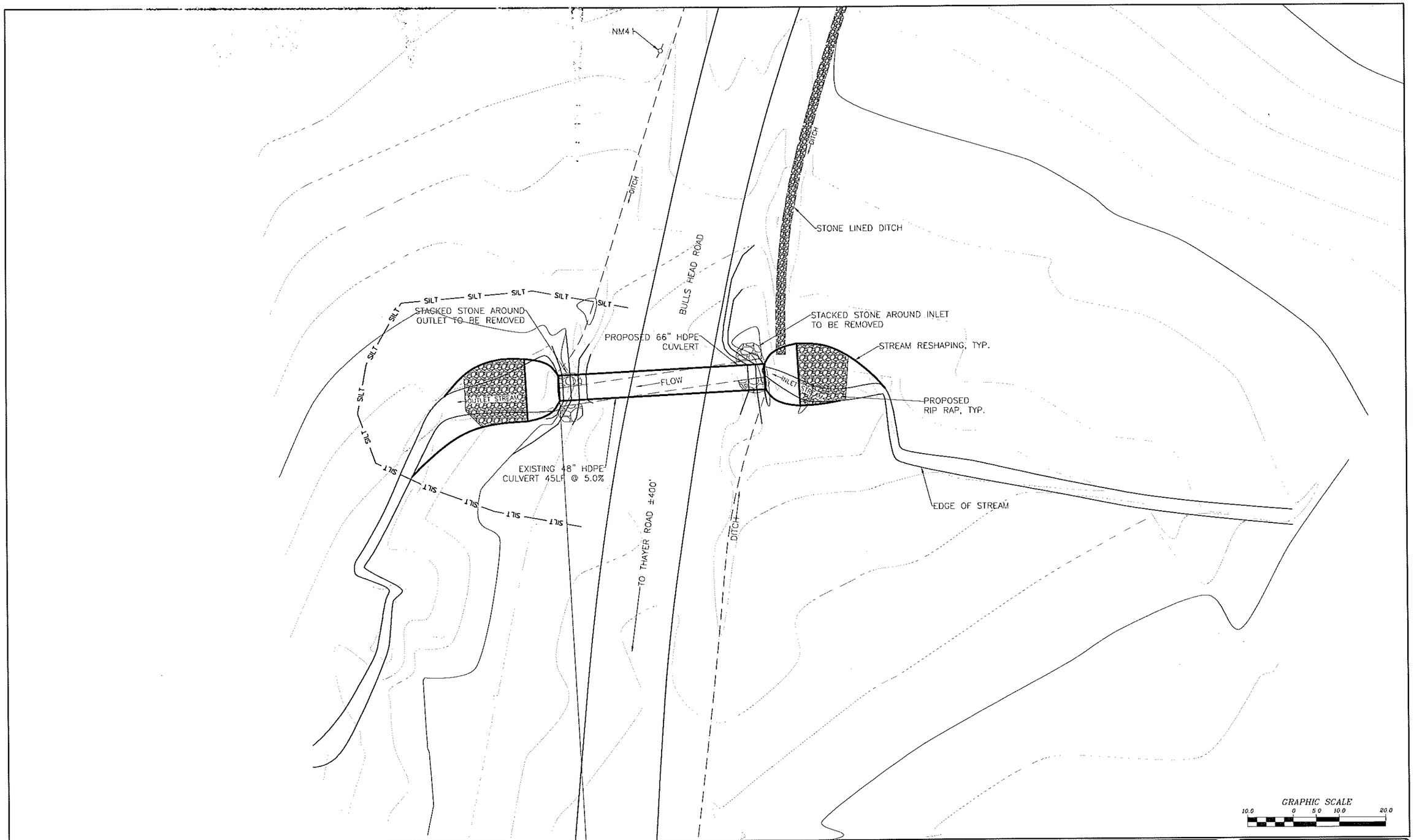

NO.	DATE	REVISION	BY
00	10/2016	ORIGINAL ISSUE	ATB

JME
John M. McDonald Engineering
a member of PRIME Group

New York Office
7 South Church Street Schenectady, New York 12305
Ph: 518 382 1774 Fax: 518 382 1776
www.mcdonaldengineers.com www.primeeng.com

PROJ. ENGR.: ATB | DRAWN BY: BSN | CHECKED BY: JMM

LICENSED PROFESSIONAL ENGINEER JOHN M. McDONALD NO. 54558 STATE OF NEW YORK

UNAUTHORIZED ALTERATIONS TO THIS DOCUMENT IS A VIOLATION OF SECTION 7209 SUBDIVISION 2 OF NEW YORK STATE EDUCATION LAW

MONTGOMERY COUNTY

CULVERT REPLACEMENT

CONTRACT NO. 3 - TOWN OF AMSTERDAM CULVERT REPLACEMENT
CONTRACT NO. 4 - TOWN OF FLORIDA CULVERT REPLACEMENT

SHEET TITLE:

BULLSHEAD ROAD
SITE PLAN

SCALE: AS SHOWN
FILE NO.: 134-1601-200
DATE: OCTOBER 2016
SHEET NO.: B1

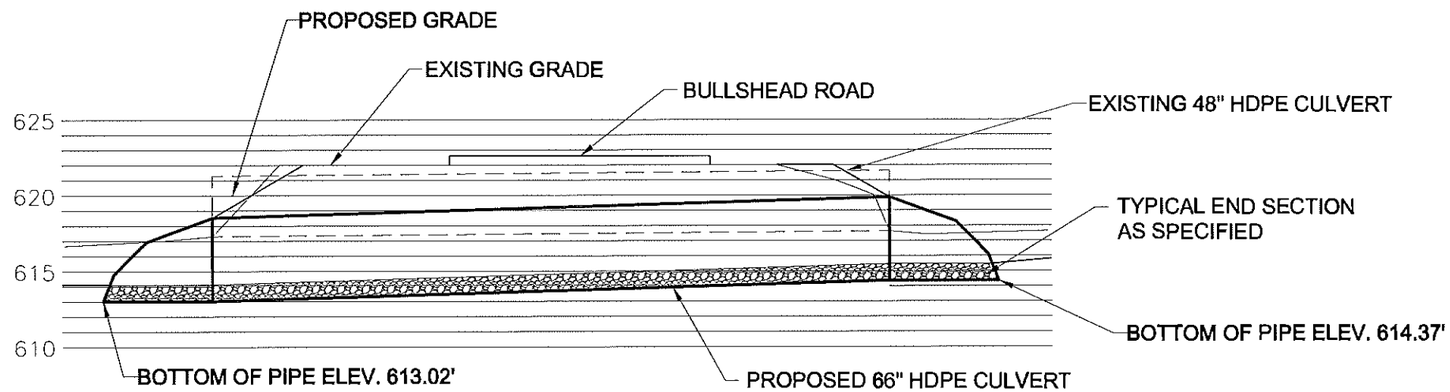

A
B2

BULLSHEAD ROAD PROFILE

GRAPHIC SCALE
5.0 0 2.5 5.0 10.0

NO.	DATE	REVISION	BY
00	10/2016	ORIGINAL ISSUE	ATB

JME
John M. McDonald Engineering
a member of PRIME Group®

New York Office
7 South Church Street Schenectady, New York 12305
Ph: 518 382 1774 Fax: 518 382 1776
www.mcdonaldengineers.com www.primeeng.com

PROJ. ENGR.: ATB | DRAWN BY: BSN | CHECKED BY: JMM

JOHN M. MCDONALD LICENSED PROFESSIONAL ENGINEER NO. 54506 STATE OF NEW YORK

UNAUTHORIZED ALTERATIONS TO THIS DOCUMENT IS A VIOLATION OF SECTION 7209 SUBDIVISION 2 OF NEW YORK STATE EDUCATION LAW

MONTGOMERY COUNTY

CULVERT REPLACEMENT

CONTRACT NO. 3 - TOWN OF AMSTERDAM CULVERT REPLACEMENT
CONTRACT NO. 4 - TOWN OF FLORIDA CULVERT REPLACEMENT

SHEET TITLE:
BULLSHEAD ROAD PROFILE

SCALE: AS SHOWN
FILE NO.: 134-1601-203
DATE: OCTOBER 2016
SHEET NO.: B2

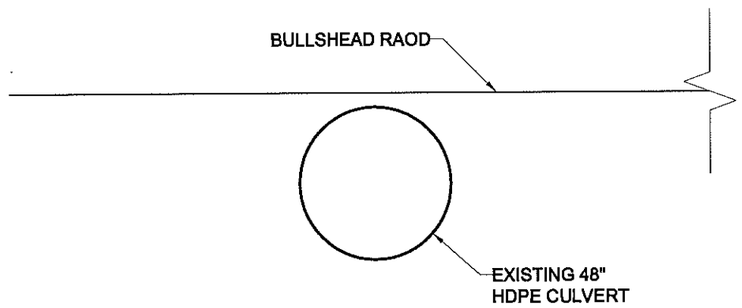

A
B3
EXISTING CROSS SECTION

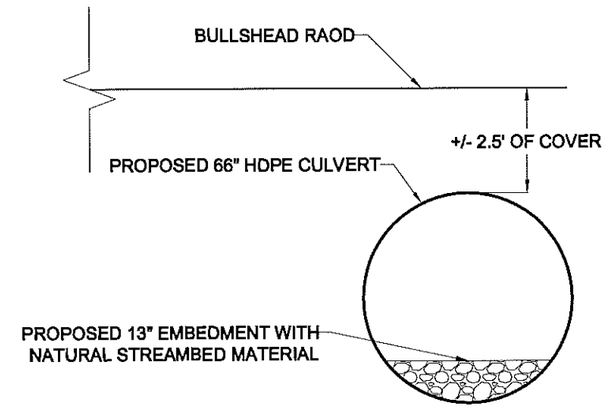

B
B3
PROPOSED CROSS SECTION

NO.	DATE	REVISION	BY
00	10/2016	ORIGINAL ISSUE	ATB

JME
John M. McDonald Engineering
a member of PRIME Group®
New York Office
7 South Church Street Schenectady, New York 12305
Ph: 518 382 1774 Fax: 518 382 1776
www.mcdonaldengineers.com www.primeeng.com

PROJ. ENGR.: ATB | DRAWN BY: BSN | CHECKED BY: JMM

UNAUTHORIZED ALTERATIONS TO THIS DOCUMENT IS A VIOLATION OF SECTION 7209 SUBDIVISION 2 OF NEW YORK STATE EDUCATION LAW

MONTGOMERY COUNTY

CULVERT REPLACEMENT

CONTRACT NO. 3 - TOWN OF AMSTERDAM CULVERT REPLACEMENT
CONTRACT NO. 4 - TOWN OF FLORIDA CULVERT REPLACEMENT

SHEET TITLE:

BULLSHEAD ROAD
CROSS SECTIONS

SCALE: AS SHOWN
FILE NO.: 134-1601-206
DATE: OCTOBER 2016
SHEET NO.: B3

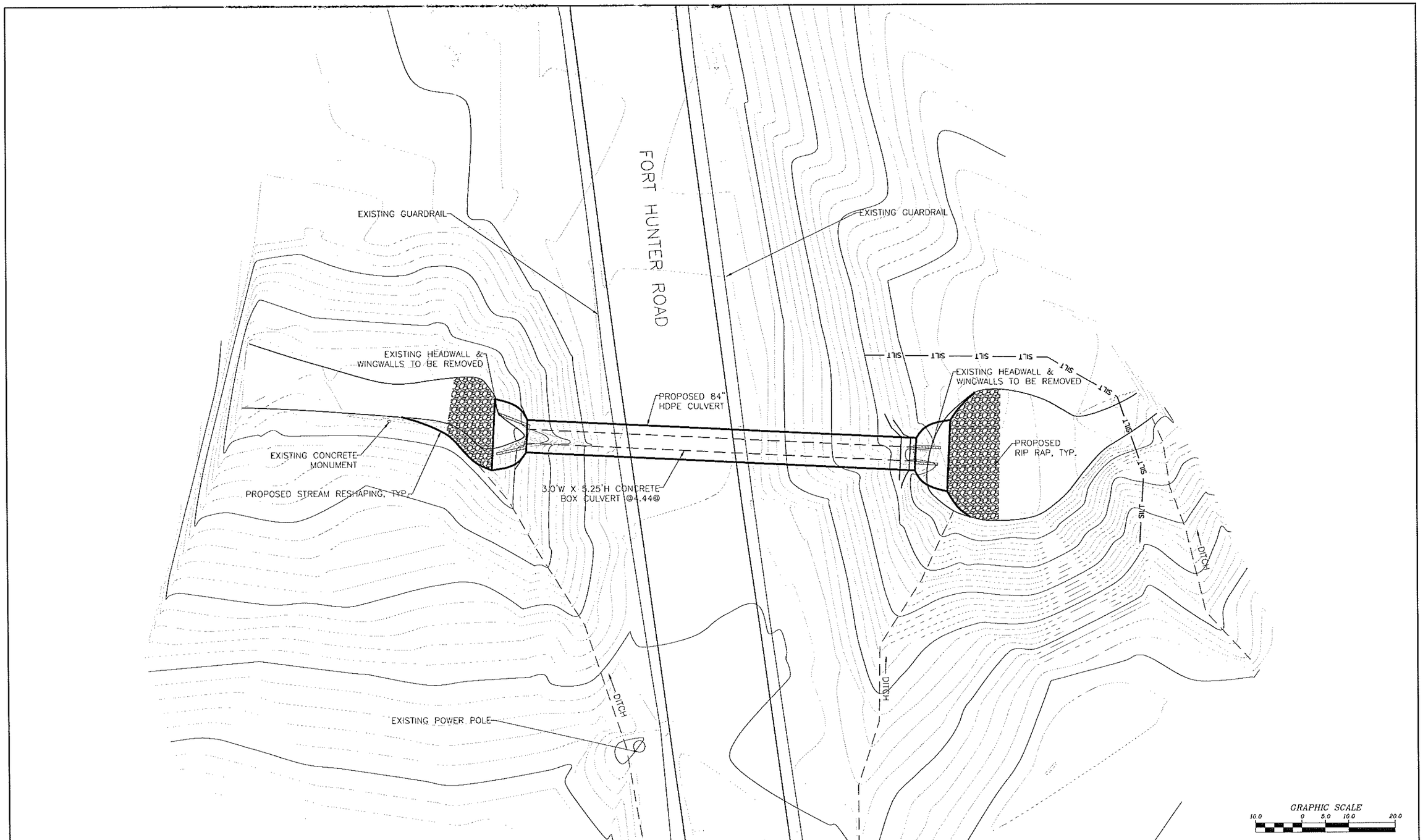

NO.	DATE	REVISION	BY
00	10/2016	ORIGINAL ISSUE	ATB

JME
John M. McDonald Engineering
a member of PRIME Group

New York Office
7 South Church Street Schenectady, New York 12305
Ph: 518 382 1774 Fax: 518 382 1776
www.mcdonaldengineers.com www.primeeng.com

PROJ. ENGR.: ATB | DRAWN BY: BSN | CHECKED BY: JMM

JOHN M. McDONALD LICENSED PROFESSIONAL ENGINEER NO. 54500 STATE OF NEW YORK

UNAUTHORIZED ALTERATIONS TO THIS DOCUMENT IS A VIOLATION OF SECTION 7209 SUBDIVISION 2 OF NEW YORK STATE EDUCATION LAW

MONTGOMERY COUNTY

CULVERT REPLACEMENT

CONTRACT NO. 3 - TOWN OF AMSTERDAM CULVERT REPLACEMENT
CONTRACT NO. 4 - TOWN OF FLORIDA CULVERT REPLACEMENT

SHEET TITLE:

FORT HUNTER ROAD
SITE PLAN

SCALE: AS SHOWN

FILE NO.: 134-1601-210

DATE: OCTOBER 2016

SHEET NO.: B4

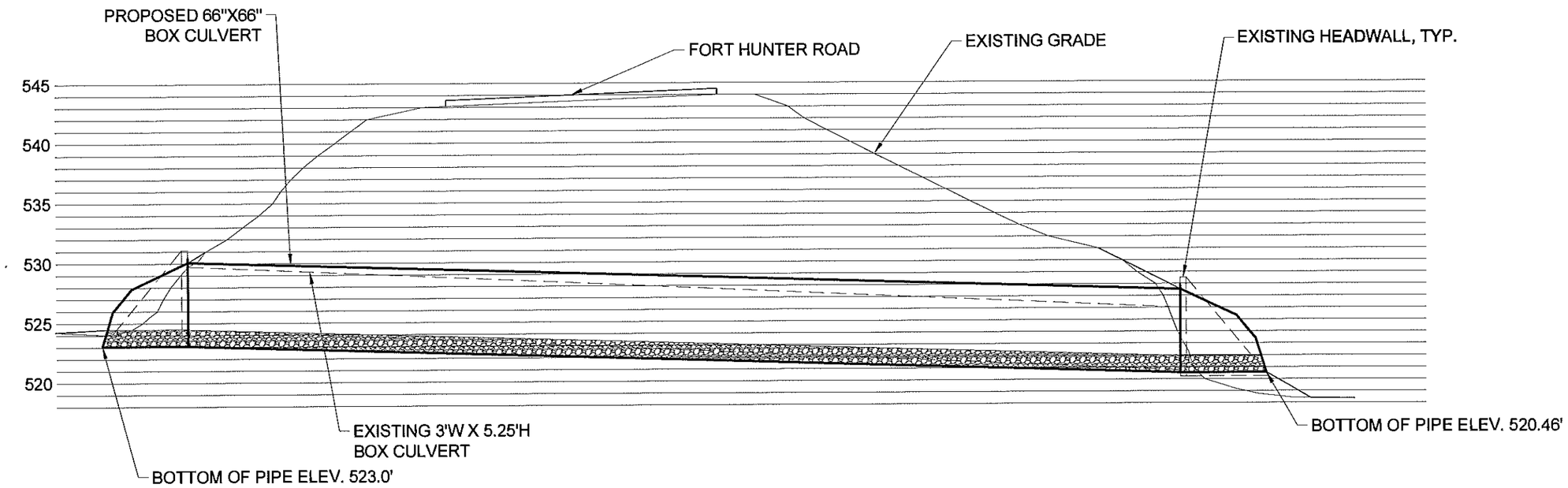

A
B5

FORT HUNTER ROAD PROFILE

GRAPHIC SCALE
5.0 0 2.5 5.0 10.0

NO.	DATE	REVISION	BY
00	10/2016	ORIGINAL ISSUE	ATB

JME
John M. McDonald Engineering
a member of PRITCHEE Group®

New York Office
7 South Church Street Schenectady, New York 12305
Ph: 518 382 1774 Fax: 518 382 1776
www.mcdonaldengineers.com www.primeeng.com

PROJ. ENGR.: ATB | DRAWN BY: BSN | CHECKED BY: JMM

LICENSED PROFESSIONAL ENGINEER JOHN M. McDONALD NO. 54568 STATE OF NEW YORK

UNAUTHORIZED ALTERATIONS TO THIS DOCUMENT IS A VIOLATION OF SECTION 7209 SUBDIVISION 2 OF NEW YORK STATE EDUCATION LAW

MONTGOMERY COUNTY

CULVERT REPLACEMENT

CONTRACT NO. 3 - TOWN OF AMSTERDAM CULVERT REPLACEMENT
CONTRACT NO. 4 - TOWN OF FLORIDA CULVERT REPLACEMENT

SHEET TITLE:
FORT HUNTER ROAD PROFILE

SCALE: AS SHOWN
FILE NO.: 134-1601-213
DATE: OCTOBER 2016
SHEET NO.: B5

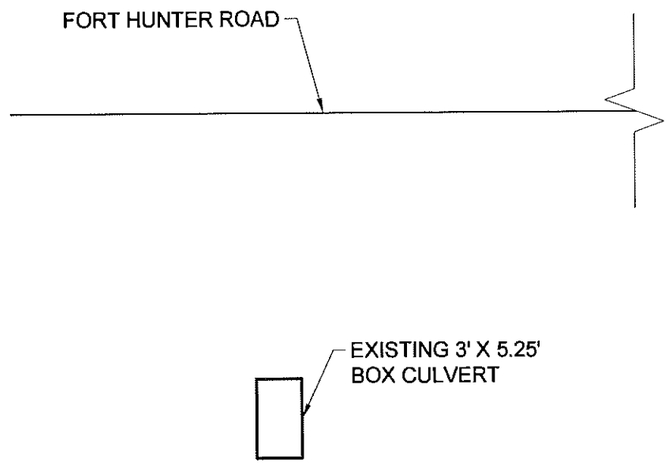

A
B6
EXISTING CROSS SECTION

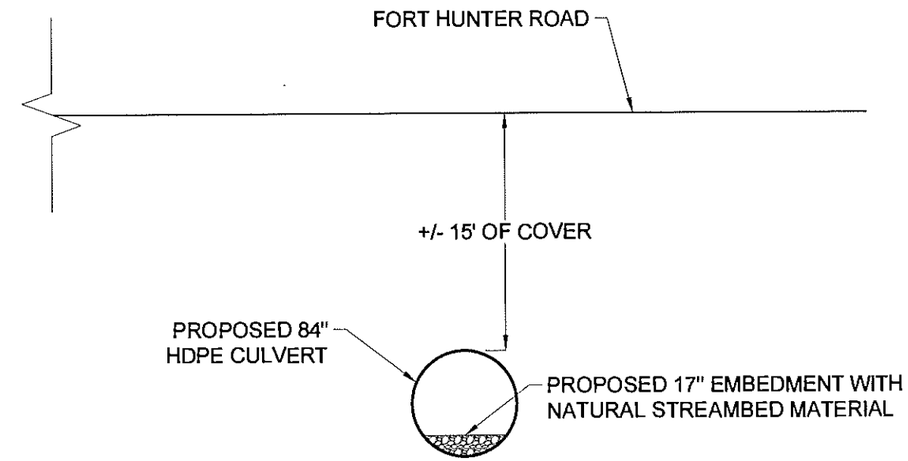

B
B6
PROPOSED CROSS SECTION

NO.	DATE	REVISION	BY
00	10/2016	ORIGINAL ISSUE	ATB

JME
John M. McDonald Engineering
a member of PRIME Group®
New York Office
7 South Church Street Schenectady, New York 12305
Ph: 518 382 1774 Fax: 518 382 1776
www.mcdonaldengineers.com www.primeeng.com

PROJ. ENGR.: ATB | DRAWN BY: BSN | CHECKED BY: JMM

JOHN M. McDONALD PROFESSIONAL ENGINEER STATE OF NEW YORK NO. 54500

UNAUTHORIZED ALTERATIONS TO THIS DOCUMENT IS A VIOLATION OF SECTION 7209 SUBDIVISION 2 OF NEW YORK STATE EDUCATION LAW

MONTGOMERY COUNTY

CULVERT REPLACEMENT

CONTRACT NO. 3 - TOWN OF AMSTERDAM CULVERT REPLACEMENT
CONTRACT NO. 4 - TOWN OF FLORIDA CULVERT REPLACEMENT

SHEET TITLE:

FORT HUNTER ROAD
CROSS SECTIONS

SCALE: AS SHOWN
FILE NO.: 134-1601-216
DATE: OCTOBER 2016
SHEET NO.: B6

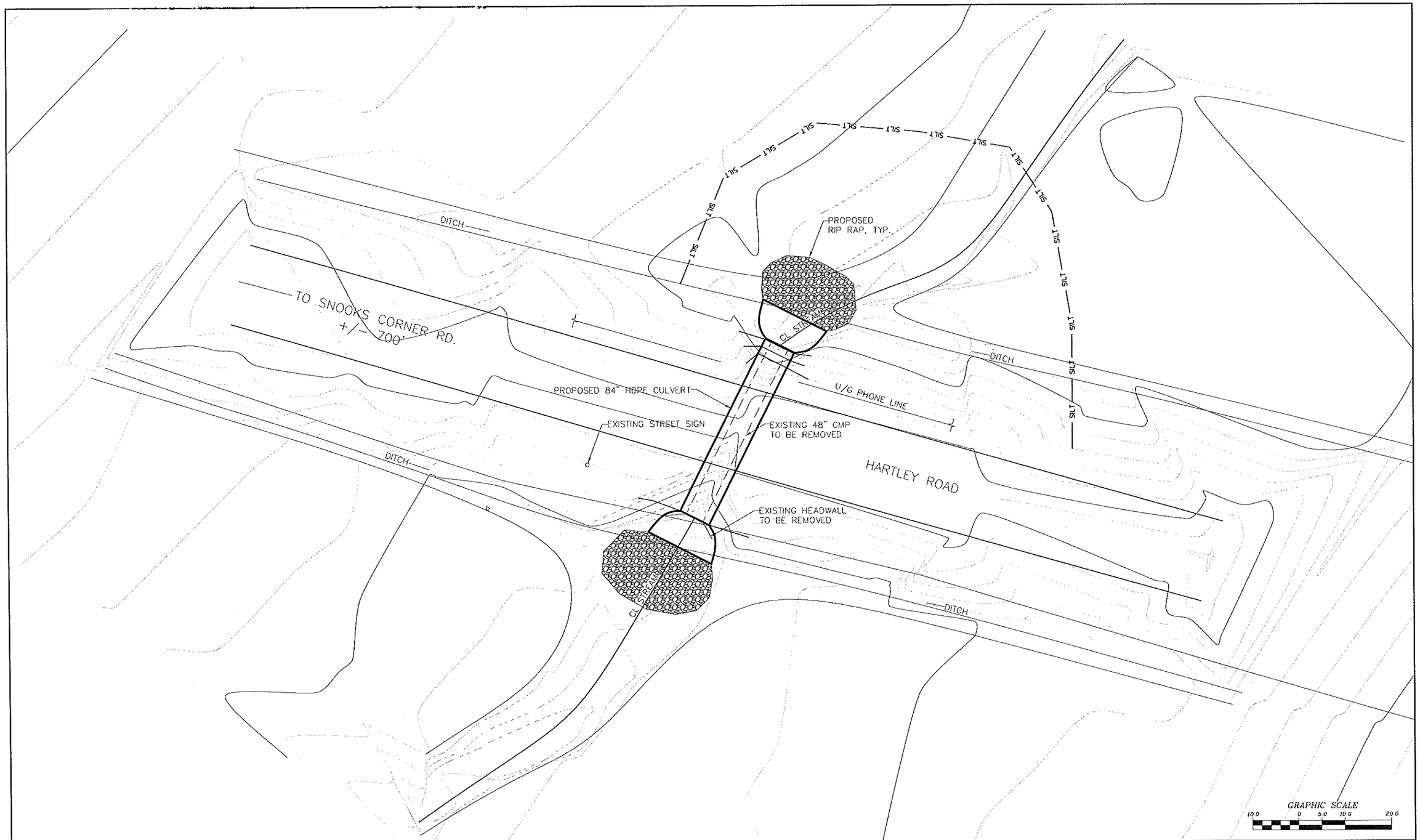

NO.	DATE	REVISION	BY
00	10/2016	ORIGINAL ISSUE	ATB

JME
John M. McDonald Engineering, P.C.
a member of PRIME Group

New York Office
7 South Church Street Schenectady, New York 12305
Ph: 518 382 1774 Fax: 518 382 1776
www.mcdonaldengineers.com www.primeeng.com

PROJ. ENGR.: ATB | DRAWN BY: BSN | CHECKED BY: JMM

LICENSED PROFESSIONAL ENGINEER JOHN M. MCDONALD NO. 54558 STATE OF NEW YORK

UNAUTHORIZED ALTERATIONS TO THIS DOCUMENT IS A VIOLATION OF SECTION 7209 SUBDIVISION 2 OF NEW YORK STATE EDUCATION LAW

MONTGOMERY COUNTY

CULVERT REPLACEMENT

CONTRACT NO. 3 - TOWN OF AMSTERDAM CULVERT REPLACEMENT
CONTRACT NO. 4 - TOWN OF FLORIDA CULVERT REPLACEMENT

SHEET TITLE:

HARTLEY ROAD
SITE PLAN

SCALE: AS SHOWN
FILE NO.: 134-1601-220
DATE: OCTOBER 2016
SHEET NO.: B7

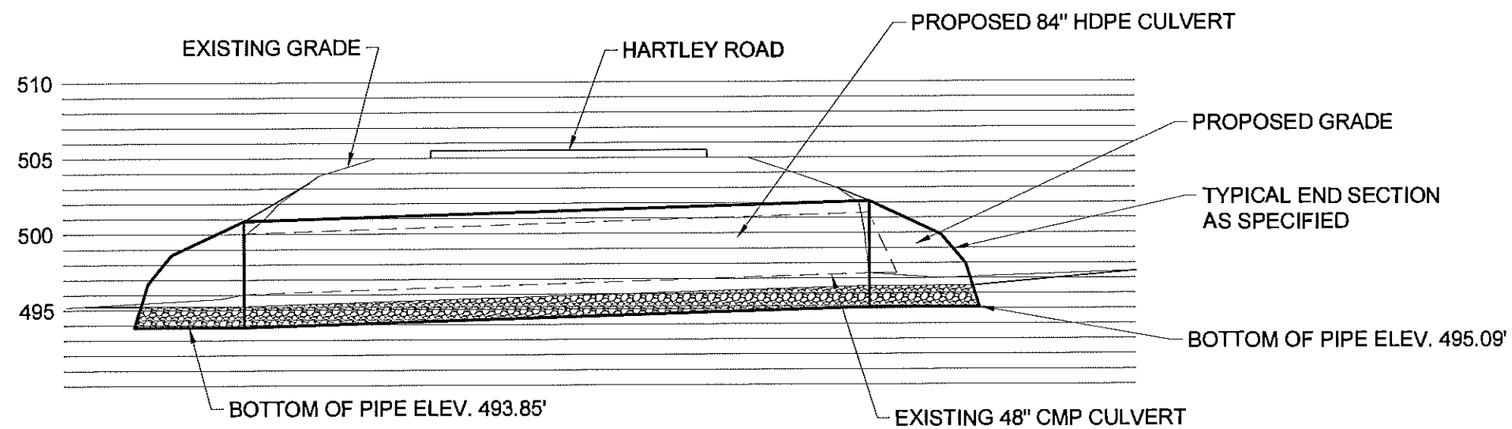

A
B8

HARTLEY ROAD PROFILE

GRAPHIC SCALE
5.0 0 2.5 5.0 10.0

NO.	DATE	REVISION	BY
00	10/2016	ORIGINAL ISSUE	ATB

JME
John M. McDonald Engineering, P.C.
a member of PRIME Group®
New York Office
7 South Church Street Schenectady, New York 12305
Ph: 518 382 1774 Fax: 518 382 1776
www.mcdonaldengineers.com www.primeeng.com

PROJ. ENGR.: ATB | DRAWN BY: BSN | CHECKED BY: JMM

UNAUTHORIZED ALTERATIONS TO THIS DOCUMENT IS A VIOLATION OF SECTION 7209 SUBDIVISION 2 OF NEW YORK STATE EDUCATION LAW

MONTGOMERY COUNTY

CULVERT REPLACEMENT

CONTRACT NO. 3 - TOWN OF AMSTERDAM CULVERT REPLACEMENT
CONTRACT NO. 4 - TOWN OF FLORIDA CULVERT REPLACEMENT

SHEET TITLE:
HARTLEY ROAD PROFILE

SCALE: AS SHOWN
FILE NO.: 134-1601-223
DATE: OCTOBER 2016
SHEET NO.: B8

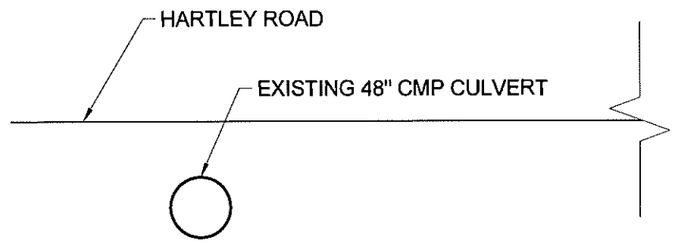

A / B9 EXISTING CROSS SECTION

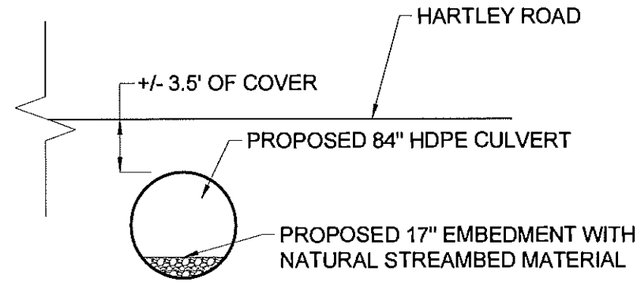

B / B9 PROPOSED CROSS SECTION

NO.	DATE	REVISION	BY
00	10/2016	ORIGINAL ISSUE	ATB

JME
John M. McDonald Engineering, P.C.
a member of PRIME Group®

New York Office
7 South Church Street Schenectady, New York 12305
Ph: 518 382 1774 Fax: 518 382 1776
www.mcdonaldengineers.com www.primeeng.com

PROJ. ENGR.: ATB | DRAWN BY: BSN | CHECKED BY: JMM

UNAUTHORIZED ALTERATIONS TO THIS DOCUMENT IS A VIOLATION OF SECTION 7209 SUBDIVISION 2 OF NEW YORK STATE EDUCATION LAW

MONTGOMERY COUNTY

CULVERT REPLACEMENT

CONTRACT NO. 3 - TOWN OF AMSTERDAM CULVERT REPLACEMENT
CONTRACT NO. 4 - TOWN OF FLORIDA CULVERT REPLACEMENT

SHEET TITLE:

HARTLEY ROAD CROSS SECTIONS

SCALE: AS SHOWN

FILE NO.: 134-1601-226

DATE: OCTOBER 2016

SHEET NO.: B9

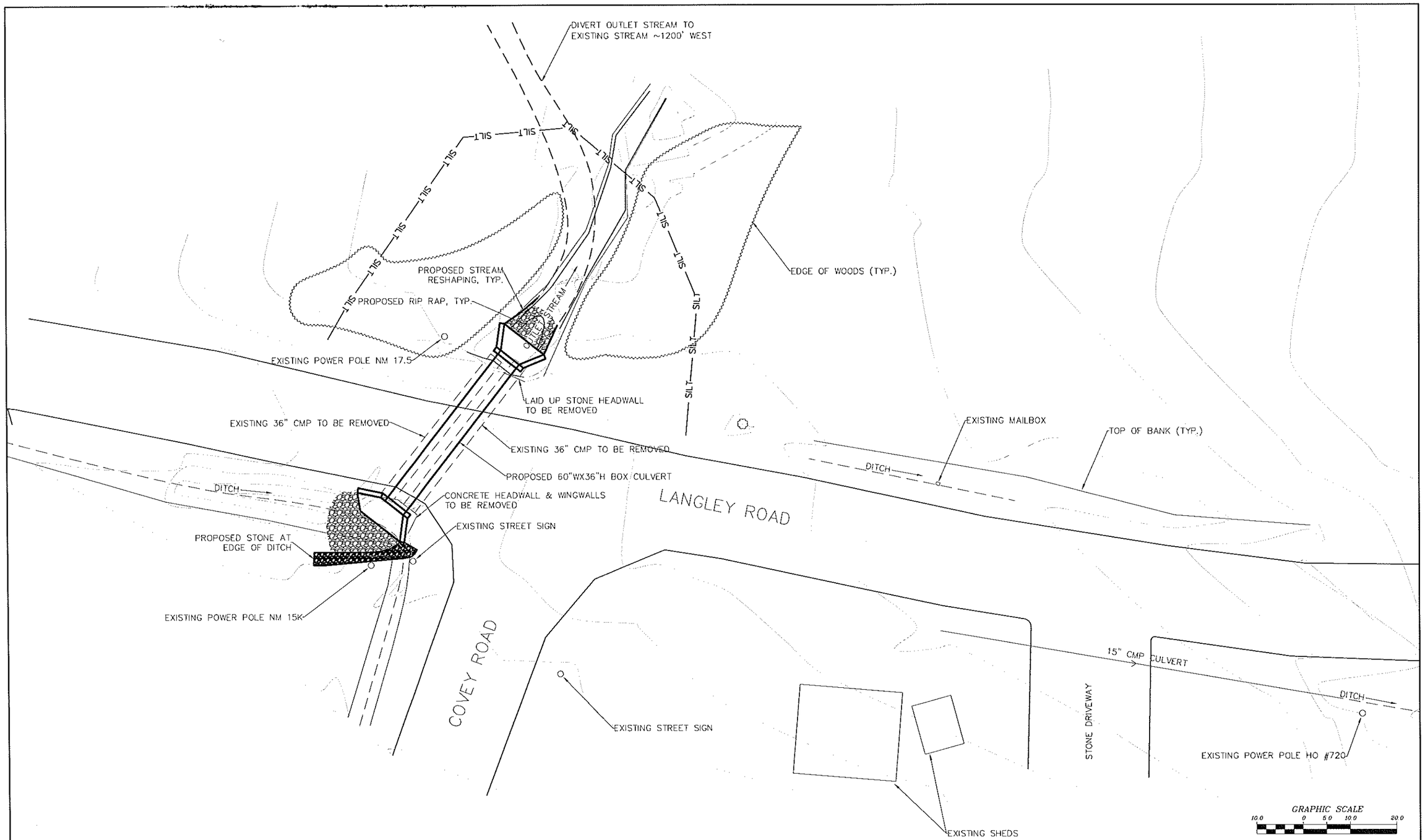

NO.	DATE	REVISION	BY
00	10/2016	ORIGINAL ISSUE	ATB

JME
John M. McDonald Engineering, P.C.
a member of PRIME Group®

New York Office
7 South Church Street Schenectady, New York 12305
Ph: 518 382 1774 Fax: 518 382 1776
www.mcdonaldengineers.com www.primeeng.com

PROJ. ENGR.: ATB | DRAWN BY: BSN | CHECKED BY: JMM

LICENSED PROFESSIONAL ENGINEER JOHN M. McDONALD NO. 54558 STATE OF NEW YORK

UNAUTHORIZED ALTERATIONS TO THIS DOCUMENT IS A VIOLATION OF SECTION 7209 SUBDIVISION 2 OF NEW YORK STATE EDUCATION LAW

MONTGOMERY COUNTY

CULVERT REPLACEMENT

CONTRACT NO. 3 - TOWN OF AMSTERDAM CULVERT REPLACEMENT
CONTRACT NO. 4 - TOWN OF FLORIDA CULVERT REPLACEMENT

SHEET TITLE:

LANGLEY ROAD
SITE PLAN

SCALE: AS SHOWN

FILE NO.: 134-1601-230

DATE: OCTOBER 2016

SHEET NO.: B10

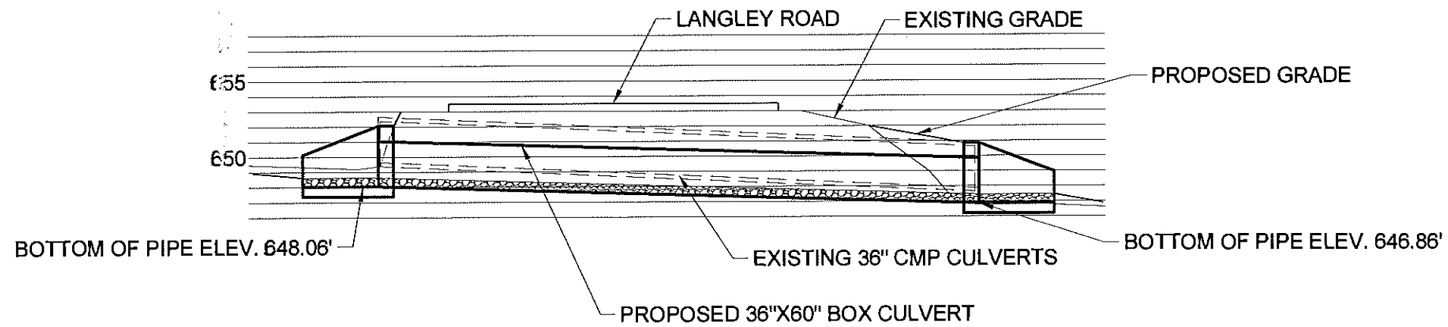

A / B11 LANGLEY ROAD PROFILE

GRAPHIC SCALE
5.0 0 2.5 5.0 10.0

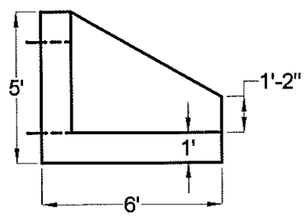

B / B11 HEADWALL ELEVATION

DO NOT SCALE

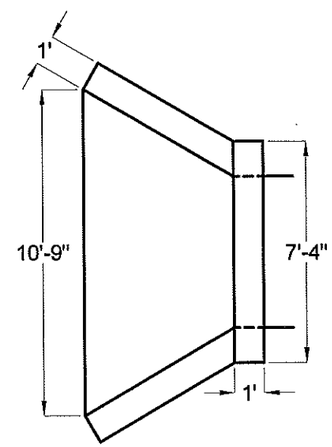

C / B11 OUTLET HEADWALL PLAN

DO NOT SCALE

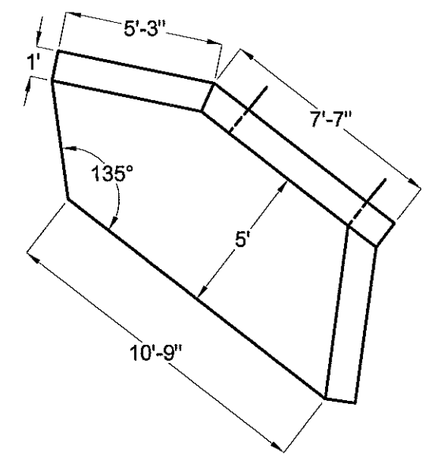

D / B11 INLET HEADWALL PLAN

DO NOT SCALE

NO.	DATE	REVISION	BY
00	10/2016	ORIGINAL ISSUE	ATB

JME
John M. McDonald Engineering, P.C.
a member of PRIME Group®
New York Office
7 South Church Street Schenectady, New York 12305
Ph: 518 382 1774 Fax: 518 382 1776
www.mcdonaldenglineers.com www.primeeng.com

PROJ. ENGR.: ATB | DRAWN BY: BSN | CHECKED BY: JMM

JOHN M. MCDONALD PROFESSIONAL ENGINEER NO. 54505 STATE OF NEW YORK

UNAUTHORIZED ALTERATIONS TO THIS DOCUMENT IS A VIOLATION OF SECTION 7209 SUBDIVISION 2 OF NEW YORK STATE EDUCATION LAW

MONTGOMERY COUNTY

CULVERT REPLACEMENT

CONTRACT NO. 3 - TOWN OF AMSTERDAM CULVERT REPLACEMENT
CONTRACT NO. 4 - TOWN OF FLORIDA CULVERT REPLACEMENT

SHEET TITLE: LANGLEY ROAD PROFILE

SCALE: AS SHOWN
FILE NO.: 134-1601-233
DATE: OCTOBER 2016
SHEET NO.: B11

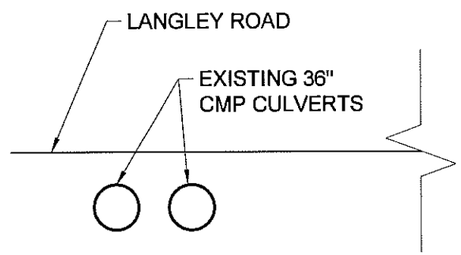

A
B12
EXISTING CROSS SECTION

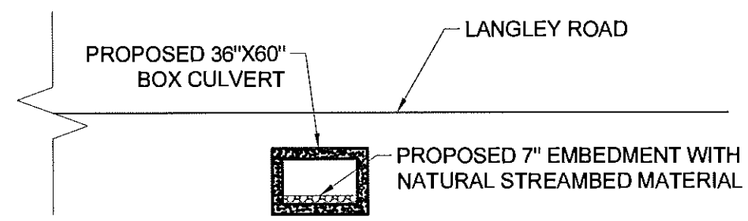

B
B12
PROPOSED CROSS SECTION

NO.	DATE	REVISION	BY
00	10/2016	ORIGINAL ISSUE	ATB

JME
John M. McDonald Engineering, P.C.
a member of PRIME Group®
New York Office
7 South Church Street Schenectady, New York 12305
Ph: 518 382 1774 Fax: 518 382 1776
www.mcdonaldengineers.com www.primeeng.com

PROJ. ENGR.: ATB | DRAWN BY: BSN | CHECKED BY: JMM

JOHN M. MCDONALD PROFESSIONAL ENGINEER NO. 54506 STATE OF NEW YORK

UNAUTHORIZED ALTERATIONS TO THIS DOCUMENT IS A VIOLATION OF SECTION 7209 SUBDIVISION 2 OF NEW YORK STATE EDUCATION LAW

MONTGOMERY COUNTY

CULVERT REPLACEMENT

CONTRACT NO. 3 - TOWN OF AMSTEROAM CULVERT REPLACEMENT
CONTRACT NO. 4 - TOWN OF FLORIDA CULVERT REPLACEMENT

SHEET TITLE:

LANGLEY ROAD CROSS SECTIONS

SCALE: AS SHOWN
FILE NO.: 134-1601-236
DATE: OCTOBER 2016
SHEET NO.: B12

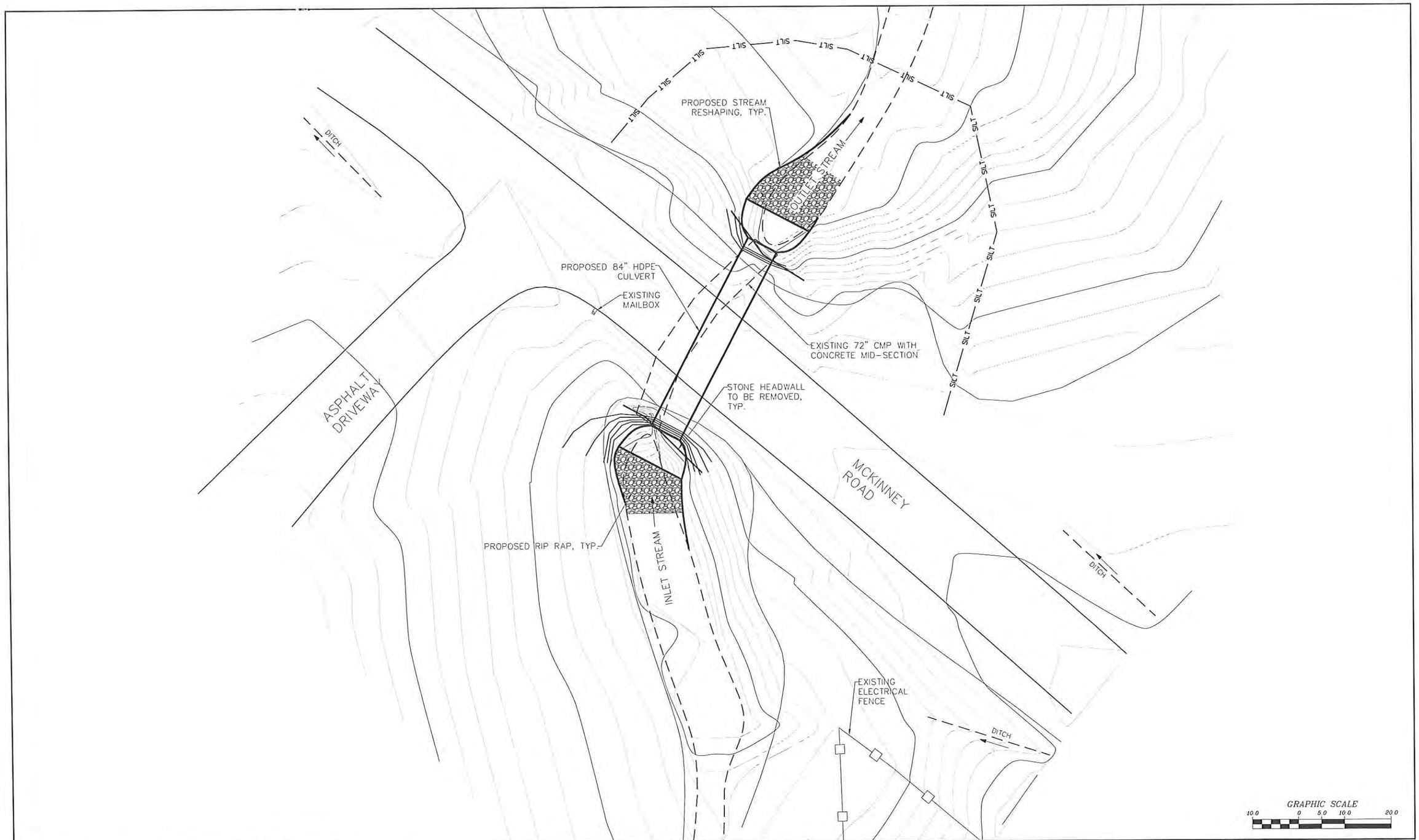

NO.	DATE	REVISION	BY
00	10/2016	ORIGINAL ISSUE	ATB

JME
John M. McDonald Engineering
a member of PRIME Group

New York Office
7 South Church Street Schenectady, New York 12305
Ph: 518 382 1774 Fax: 518 382 1776
www.mcdonaldengineers.com www.primeeng.com

PROJ. ENGR.: ATB | DRAWN BY: BSN | CHECKED BY: JMM

JOHN M. MCDONALD PROFESSIONAL ENGINEER NO. 54505 STATE OF NEW YORK

UNAUTHORIZED ALTERATIONS TO THIS DOCUMENT IS A VIOLATION OF SECTION 7209 SUBDIVISION 2 OF NEW YORK STATE EDUCATION LAW

MONTGOMERY COUNTY

CULVERT REPLACEMENT

CONTRACT NO. 3 - TOWN OF AMSTERDAM CULVERT REPLACEMENT
CONTRACT NO. 4 - TOWN OF FLORIDA CULVERT REPLACEMENT

SHEET TITLE:

MCKINNEY ROAD 4A
SITE PLAN

SCALE: AS SHOWN

FILE NO.: 134-1601-240

DATE: OCTOBER 2016

SHEET NO.: B13

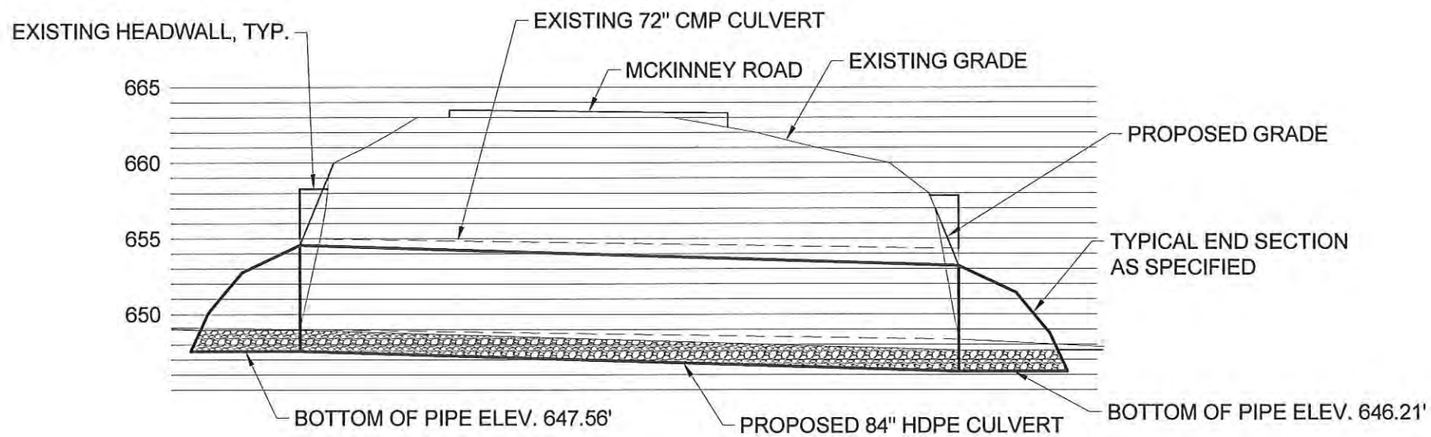

A
B14

MCKINNEY ROAD 4A PROFILE

GRAPHIC SCALE
5.0 0 2.5 5.0 10.0

NO.	DATE	REVISION	BY
00	10/2016	ORIGINAL ISSUE	ATB

JME
John M. McDonald Engineering
A Division of PRIME AE Group
New York Office
7 South Church Street Schenectady, New York 12305
Ph: 518 382 1774 Fax: 518 382 1776
www.mcdonaldenglineers.com www.primeeng.com

PROJ. ENGR.: ATB | DRAWN BY: BSN | CHECKED BY: JMM

LICENSED PROFESSIONAL ENGINEER JOHN M. MCDONALD NO. 54596 STATE OF NEW YORK

UNAUTHORIZED ALTERATIONS TO THIS DOCUMENT IS A VIOLATION OF SECTION 7209 SUBDIVISION 2 OF NEW YORK STATE EDUCATION LAW

MONTGOMERY COUNTY

CULVERT REPLACEMENT

CONTRACT NO. 3 - TOWN OF AMSTERDAM CULVERT REPLACEMENT
CONTRACT NO. 4 - TOWN OF FLORIDA CULVERT REPLACEMENT

SHEET TITLE:
MCKINNEY ROAD 4A
PROFILE

SCALE: AS SHOWN
FILE NO.: 134-1601-243
DATE: OCTOBER 2016
SHEET NO.: B14

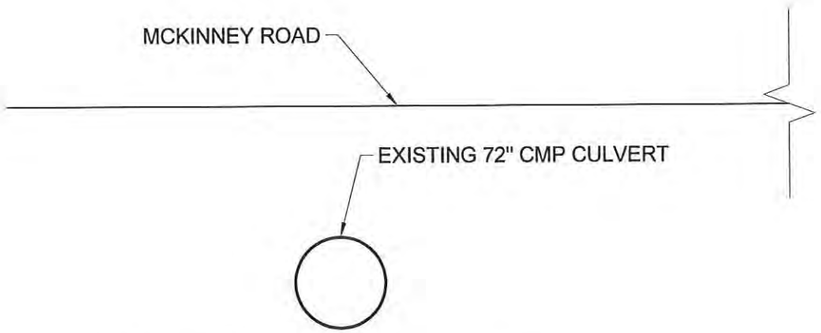

A / B15 EXISTING CROSS SECTION

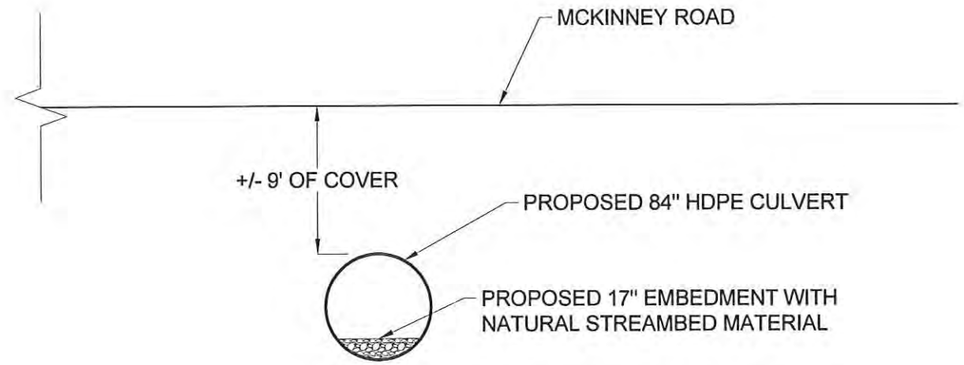

B / B15 PROPOSED CROSS SECTION

NO.	DATE	REVISION	BY
00	10/2016	ORIGINAL ISSUE	ATB

JME
John M. McDonald Engineering
a member of PRIME Group
New York Office
7 South Church Street Schenectady, New York 12305
Ph: 518 382 1774 Fax: 518 382 1776
www.mcdonaldengineers.com www.primeeng.com

PROJ. ENGR.: ATB | DRAWN BY: BSN | CHECKED BY: JMM

UNAUTHORIZED ALTERATIONS TO THIS DOCUMENT IS A VIOLATION OF SECTION 7209 SUBDIVISION 2 OF NEW YORK STATE EDUCATION LAW

MONTGOMERY COUNTY

CULVERT REPLACEMENT

CONTRACT NO. 3 - TOWN OF AMSTERDAM CULVERT REPLACEMENT
CONTRACT NO. 4 - TOWN OF FLORIDA CULVERT REPLACEMENT

SHEET TITLE:

MCKINNEY ROAD 4A
CROSS SECTIONS

SCALE: AS SHOWN

FILE NO.: 134-1601-246

DATE: OCTOBER 2016

SHEET NO.: B15

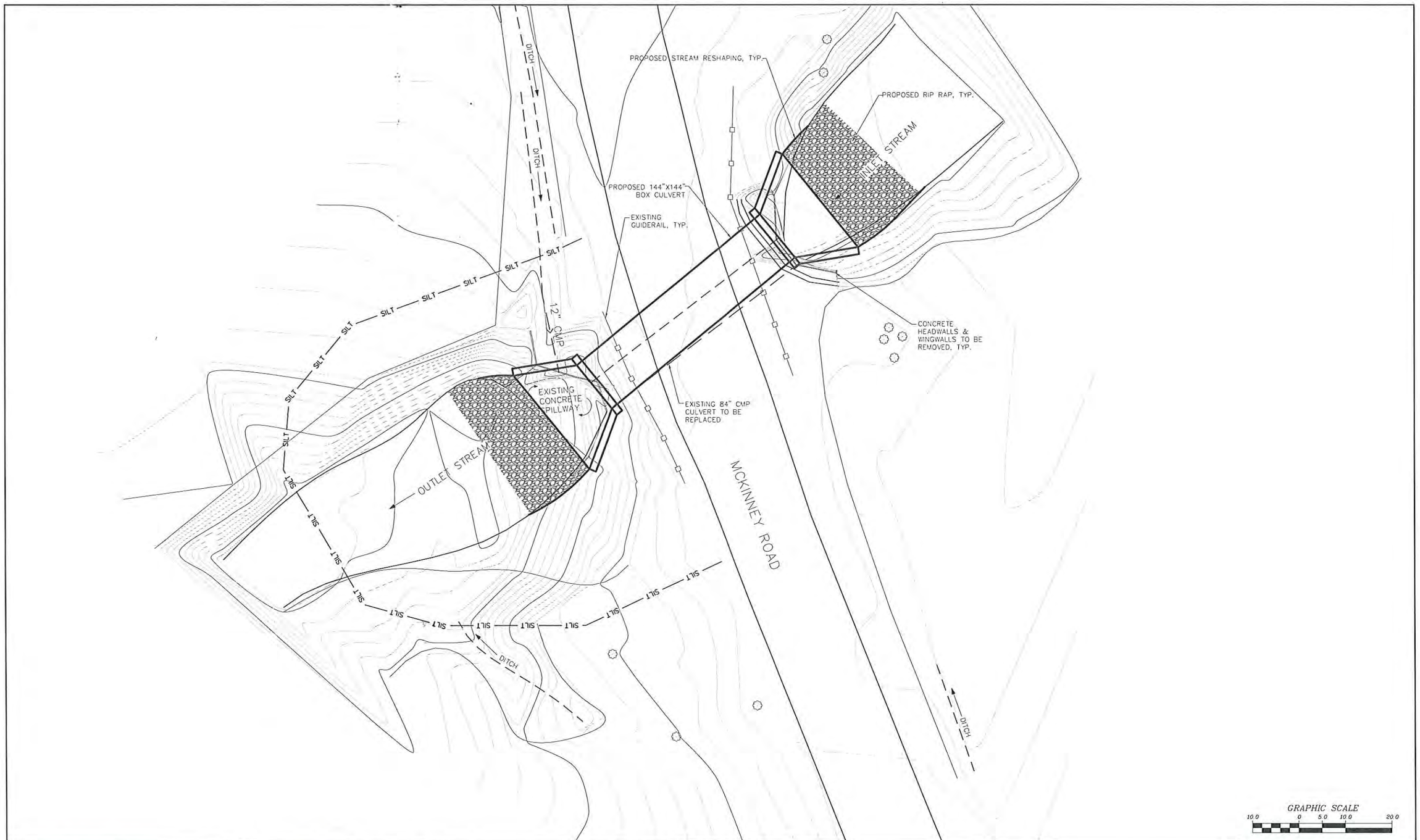

NO.	DATE	REVISION	BY
00	10/2016	ORIGINAL ISSUE	ATB

JME
John M. McDonald Engineering
a member of FEDER Group

New York Office
7 South Church Street Schenectady, New York 12305
Ph: 518 382 1774 Fax: 518 382 1776
www.mcdonaldengineers.com www.primeeng.com

PROJ. ENGR.: ATB | DRAWN BY: BSN | CHECKED BY: JMM

JOHN M. McDONALD PROFESSIONAL ENGINEER LICENSED STATE OF NEW YORK NO. 54508

UNAUTHORIZED ALTERATIONS TO THIS DOCUMENT IS A VIOLATION OF SECTION 7209 SUBDIVISION 2 OF NEW YORK STATE EDUCATION LAW

MONTGOMERY COUNTY

CULVERT REPLACEMENT

CONTRACT NO. 3 - TOWN OF AMSTERDAM CULVERT REPLACEMENT
CONTRACT NO. 4 - TOWN OF FLORIDA CULVERT REPLACEMENT

SHEET TITLE:

MCKINNEY ROAD 4B
SITE PLAN

SCALE: AS SHOWN

FILE NO.: 134-1601-250

DATE: OCTOBER 2016

SHEET NO.: B16

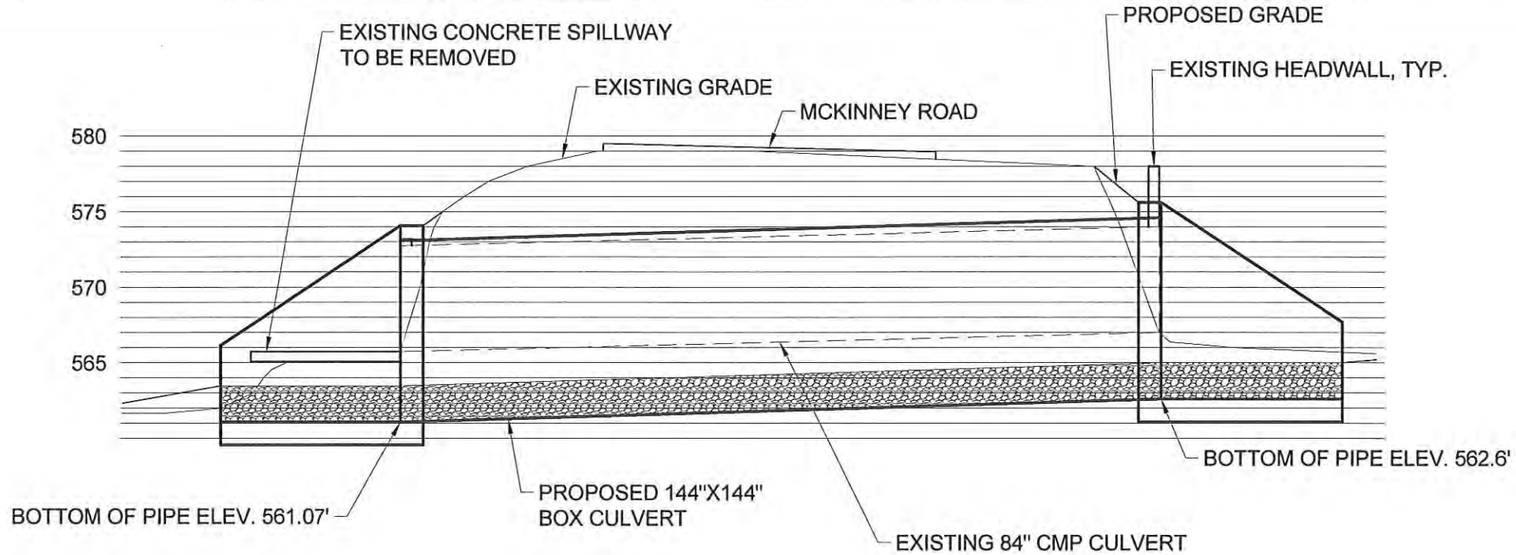

A
B17

MCKINNEY ROAD 4B PROFILE

GRAPHIC SCALE
5.0 0 2.5 5.0 10.0

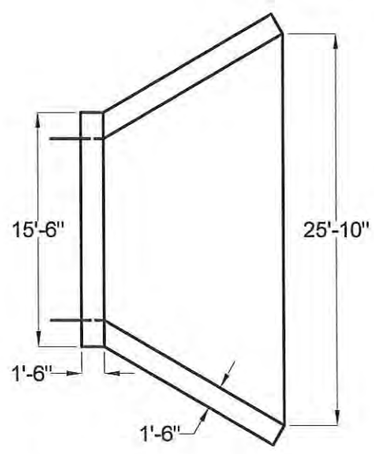

B
B17

HEADWALL PLAN

DO NOT SCALE

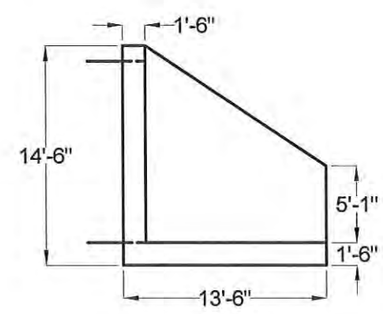

C
B17

HEADWALL ELEVATION

DO NOT SCALE

NO.	DATE	REVISION	BY
00	10/2016	ORIGINAL ISSUE	ATB

JME
John M. McDonald Engineering
Knowledge & Passion

New York Office
7 South Church Street Schenectady, New York 12305
Ph: 518 382 1774 Fax: 518 382 1776
www.mcdonaldengineers.com www.primeeng.com

PROJ. ENGR.: ATB | DRAWN BY: BSN | CHECKED BY: JMM

UNAUTHORIZED ALTERATIONS TO THIS DOCUMENT IS A VIOLATION OF SECTION 7209 SUBDIVISION 2 OF NEW YORK STATE EDUCATION LAW

MONTGOMERY COUNTY

CULVERT REPLACEMENT

CONTRACT NO. 3 - TOWN OF AMSTERDAM CULVERT REPLACEMENT
CONTRACT NO. 4 - TOWN OF FLORIDA CULVERT REPLACEMENT

SHEET TITLE:

MCKINNEY ROAD 4B
PROFILE

SCALE: AS SHOWN
FILE NO.: 134-1601-253
DATE: OCTOBER 2016
SHEET NO.: B17

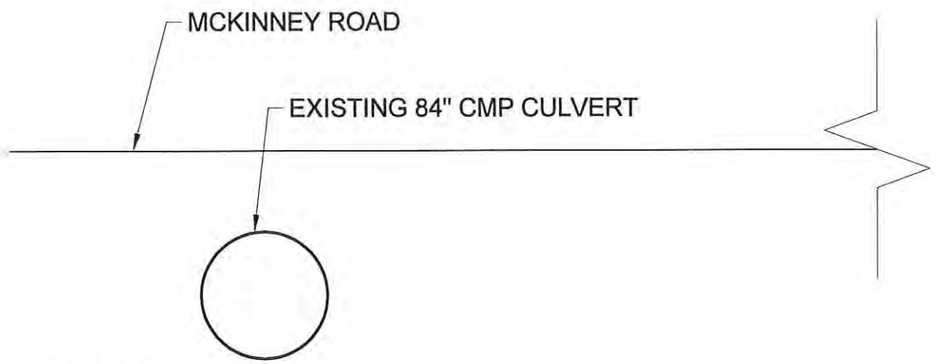

A / B18 EXISTING CROSS SECTION

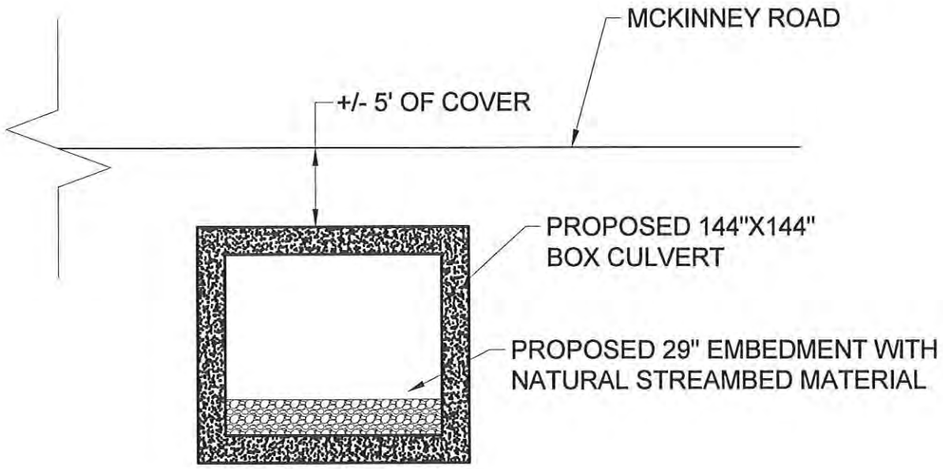

B / B18 PROPOSED CROSS SECTION

NO.	DATE	REVISION	BY
00	10/2016	ORIGINAL ISSUE	ATB

JME
John M. McDonald Engineering
New York Office
7 South Church Street Schenectady, New York 12305
Ph: 518 382 1774 Fax: 518 382 1776
www.mcdonaldengineers.com www.primeeng.com

PROJ. ENGR.: ATB | DRAWN BY: BSN | CHECKED BY: JMM

UNAUTHORIZED ALTERATIONS TO THIS DOCUMENT IS A VIOLATION OF SECTION 7209 SUBDIVISION 2 OF NEW YORK STATE EDUCATION LAW

MONTGOMERY COUNTY

CULVERT REPLACEMENT

CONTRACT NO. 3 - TOWN OF AMSTERDAM CULVERT REPLACEMENT
CONTRACT NO. 4 - TOWN OF FLORIDA CULVERT REPLACEMENT

SHEET TITLE:

MCKINNEY ROAD 4B
CROSS SECTIONS

SCALE: AS SHOWN
FILE NO.: 134-1601-256
DATE: OCTOBER 2016
SHEET NO.: B18

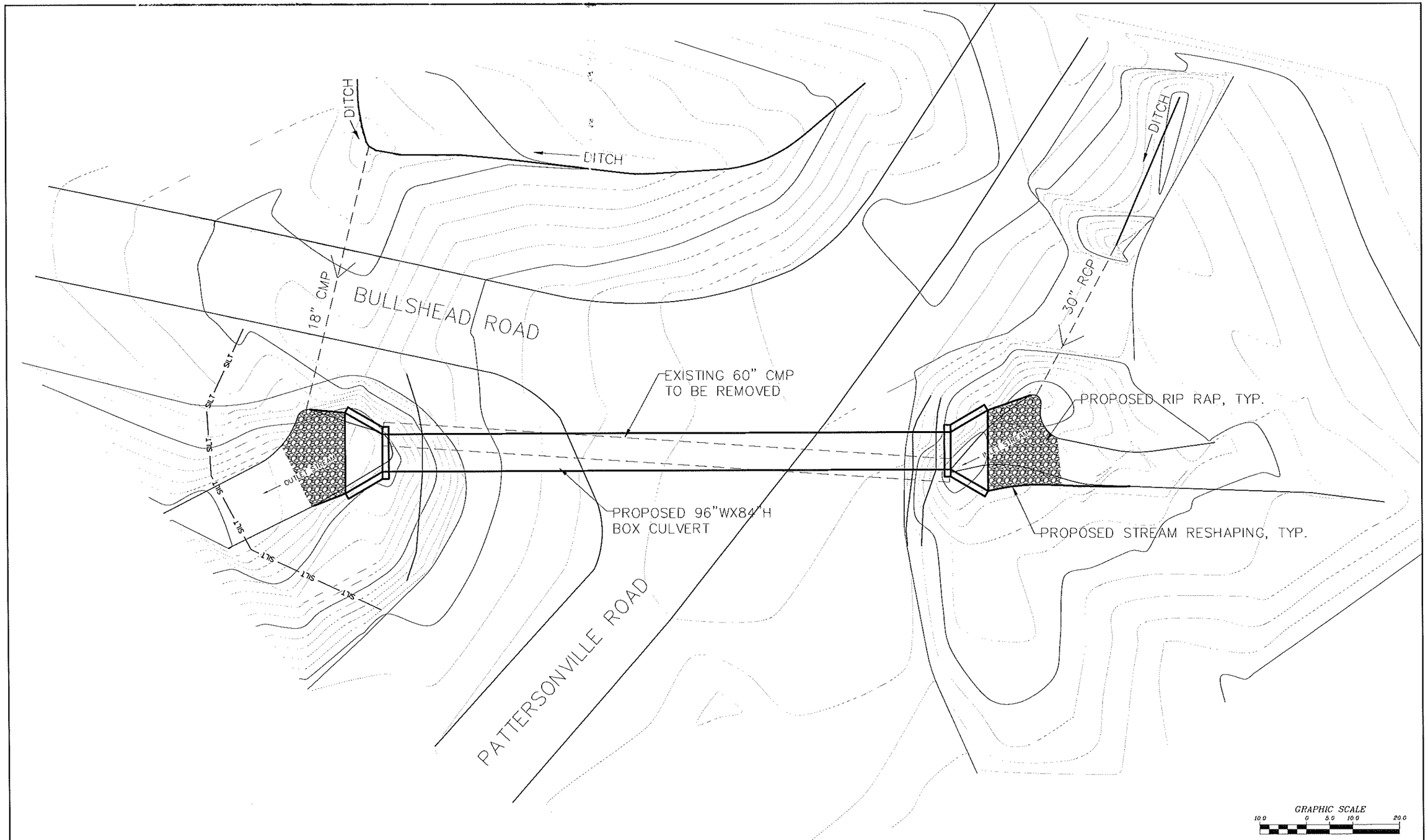

NO.	DATE	REVISION	BY
00	10/2016	ORIGINAL ISSUE	ATB

JME
John M. McDonald Engineering, P.C.
a member of PRIME Group®

New York Office
7 South Church Street Schenectady, New York 12305
Ph: 518 382 1774 Fax: 518 382 1776
www.mcdonaldengineers.com www.primeeng.com

PROJ. ENGR.: ATB | DRAWN BY: BSN | CHECKED BY: JMM

JOHN M. MCDONALD PROFESSIONAL ENGINEER NO. 54508 STATE OF NEW YORK

UNAUTHORIZED ALTERATIONS TO THIS DOCUMENT IS A VIOLATION OF SECTION 7209 SUBDIVISION 2 OF NEW YORK STATE EDUCATION LAW

MONTGOMERY COUNTY

MONTGOMERY COUNTY CULVERT
REPLACEMENT

SHEET TITLE:

PATTERSONVILLE ROAD
SITE PLAN

SCALE: AS SHOWN

FILE NO.: 134-1601-260

DATE: OCTOBER 2016

SHEET NO.: B19

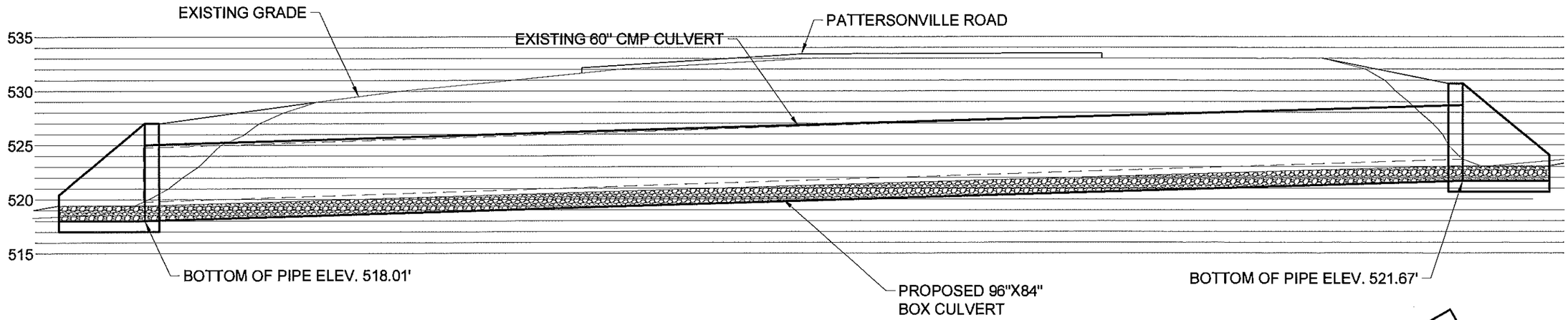

A / B20 PATTERSONVILLE ROAD PROFILE

GRAPHIC SCALE
5.0 0 2.5 5.0 10.0

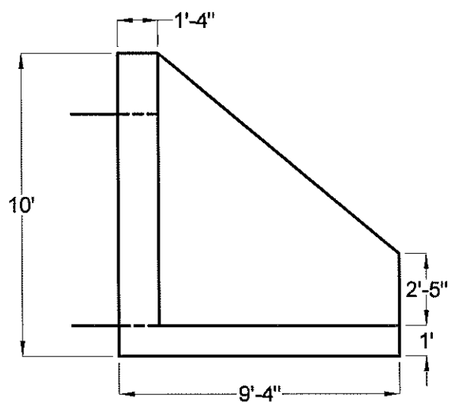

B / B20 HEADWALL ELEVATION

DO NOT SCALE

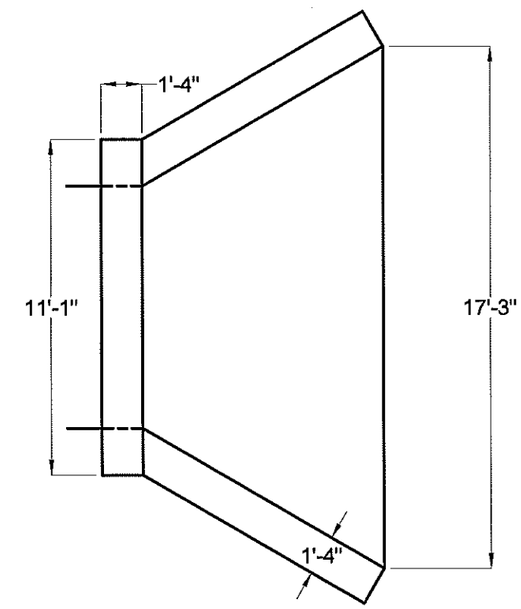

C / B20 HEADWALL PLAN

DO NOT SCALE

NO.	DATE	REVISION	BY
00	10/2016	ORIGINAL ISSUE	ATB

JME
John M. McDonald Engineering, P.C.
a member of PRIME Group®

New York Office
7 South Church Street Schenectady, New York 12305
Ph: 518 382 1774 Fax: 518 382 1776
www.mcdonaldengineers.com www.primeeng.com

PROJ. ENGR.: ATB | DRAWN BY: BSN | CHECKED BY: JMM

JOHN M. MCDONALD LICENSED PROFESSIONAL ENGINEER NO. 54556 STATE OF NEW YORK

UNAUTHORIZED ALTERATIONS TO THIS DOCUMENT IS A VIOLATION OF SECTION 7209 SUBDIVISION 2 OF NEW YORK STATE EDUCATION LAW

MONTGOMERY COUNTY

CULVERT REPLACEMENT

CONTRACT NO. 3 - TOWN OF AMSTERDAM CULVERT REPLACEMENT
CONTRACT NO. 4 - TOWN OF FLORIDA CULVERT REPLACEMENT

SHEET TITLE:

PATTERSONVILLE ROAD PROFILE

SCALE: AS SHOWN

FILE NO.: 134-1601-263

DATE: OCTOBER 2016

SHEET NO.: B20

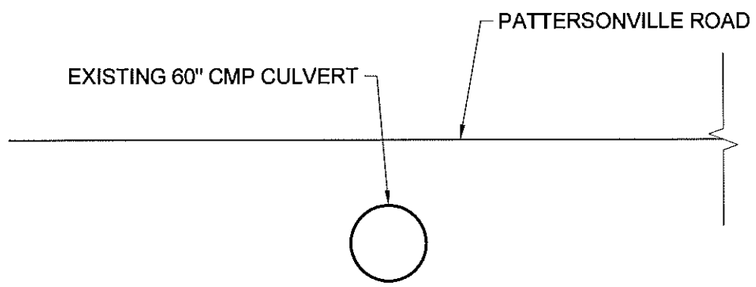

A / B21 EXISTING CROSS SECTION

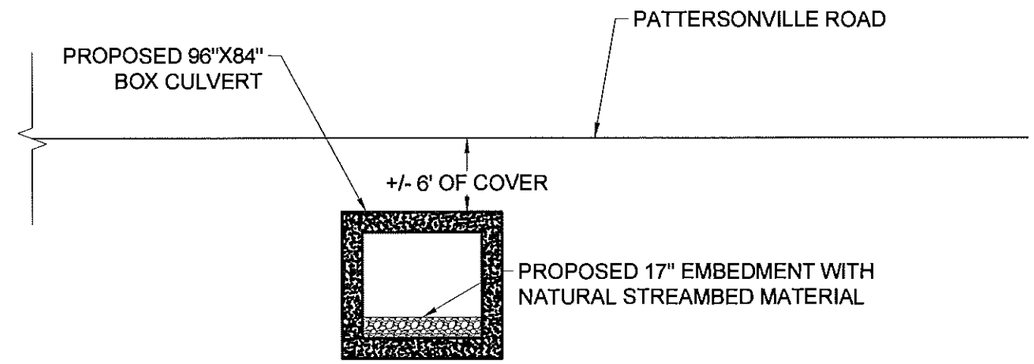

B / B21 PROPOSED CROSS SECTION

NO.	DATE	REVISION	BY
00	10/2016	ORIGINAL ISSUE	ATB

JME
John M. McDonald Engineering, P.C.
a member of PRIME Group®
New York Office
7 South Church Street Schenectady, New York 12305
Ph: 518 382 1774 Fax: 518 382 1776
www.mcdonaldengineers.com www.primeeng.com

PROJ. ENGR.: ATB | DRAWN BY: BSN | CHECKED BY: JMM

UNAUTHORIZED ALTERATIONS TO THIS DOCUMENT IS A VIOLATION OF SECTION 7209 SUBDIVISION 2 OF NEW YORK STATE EDUCATION LAW

MONTGOMERY COUNTY

CULVERT REPLACEMENT

CONTRACT NO. 3 - TOWN OF AMSTERDAM CULVERT REPLACEMENT
CONTRACT NO. 4 - TOWN OF FLORIDA CULVERT REPLACEMENT

SHEET TITLE:

PATTERSONVILLE ROAD CROSS SECTIONS

SCALE: AS SHOWN

FILE NO.: 134-1601-266

DATE: OCTOBER 2016

SHEET NO.: B21

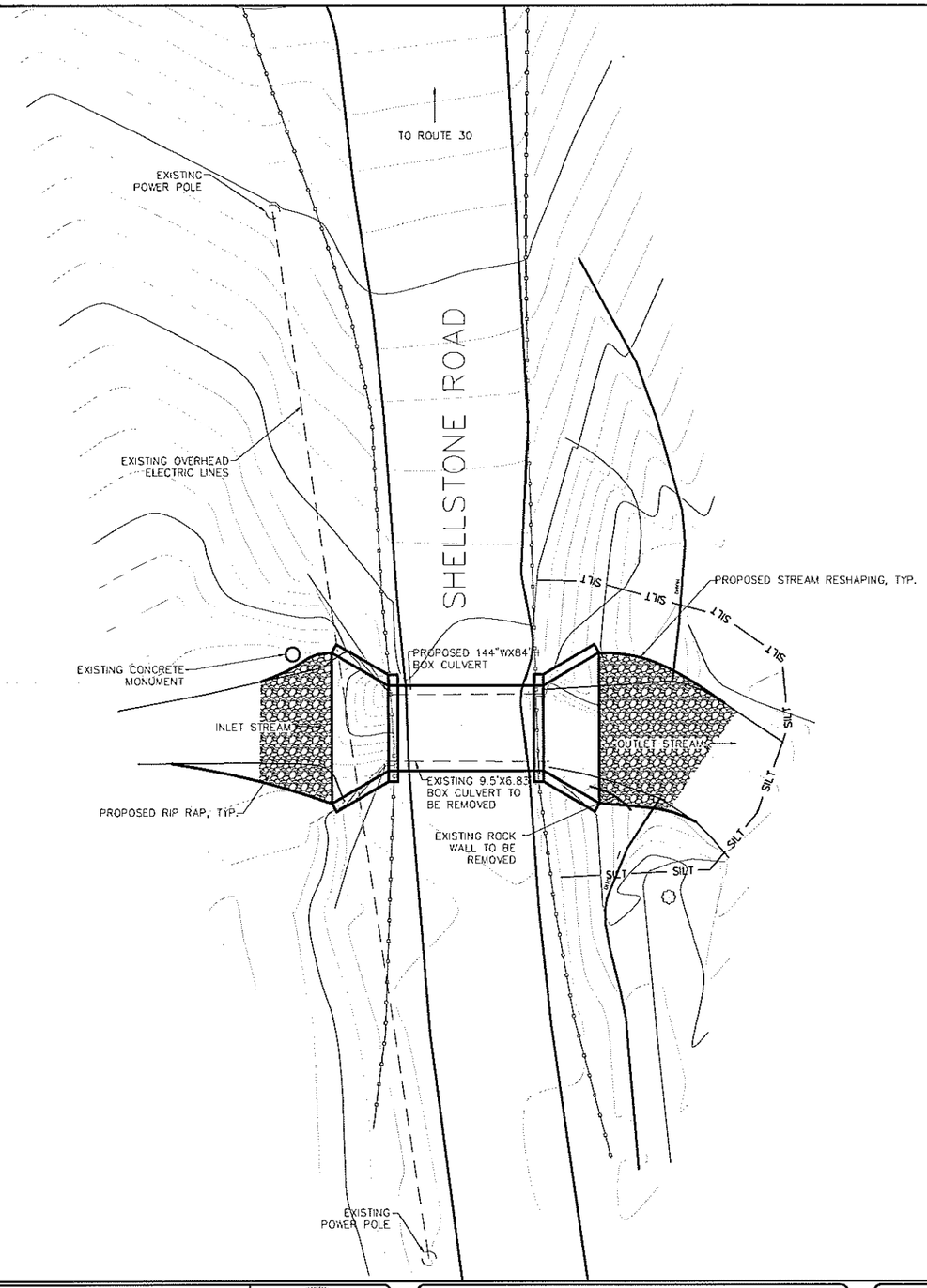

GRAPHIC SCALE
10.0 0 5.0 10.0 20.0

NO.	DATE	REVISION	BY
00	10/2016	ORIGINAL ISSUE	ATB

JME
John M. McDonald Engineering, P.C.
a member of PRIME Group
New York Office
7 South Church Street Schenectady, New York 12305
Ph: 518 382 1774 Fax: 518 382 1776
www.mcdonaldengineers.com www.primeeng.com

PROJ. ENGR.: ATB | DRAWN BY: BSN | CHECKED BY: JMM

JOHN M. MCDONALD NO. 54506 LICENSED PROFESSIONAL ENGINEER STATE OF NEW YORK

UNAUTHORIZED ALTERATIONS TO THIS DOCUMENT IS A VIOLATION OF SECTION 7209 SUBDIVISION 2 OF NEW YORK STATE EDUCATION LAW

MONTGOMERY COUNTY

CULVERT REPLACEMENT

CONTRACT NO. 3 - TOWN OF AMSTERDAM CULVERT REPLACEMENT
CONTRACT NO. 4 - TOWN OF FLORIDA CULVERT REPLACEMENT

SHEET TITLE:

SHELLSTONE ROAD
SITE PLAN

SCALE: AS SHOWN
FILE NO.: 134-1601-270
DATE: OCTOBER 2016
SHEET NO.: B22

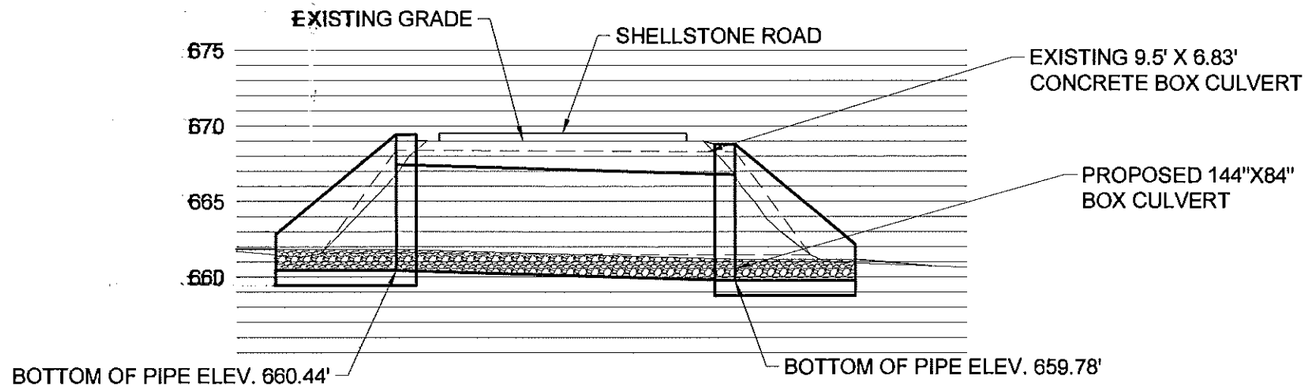

A / B23 SHELLSTONE ROAD BOX CULVERT PROFILE

GRAPHIC SCALE
5.0 0 2.5 5.0 10.0

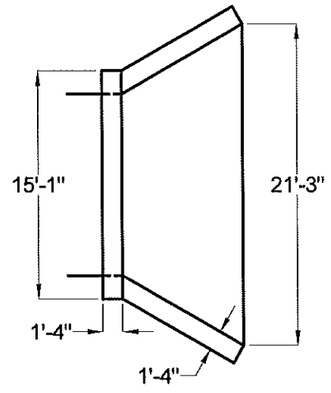

B / B23 HEADWALL PLAN

DO NOT SCALE

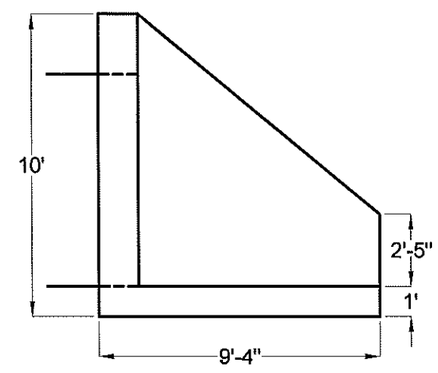

C / B23 HEADWALL ELEVATION

DO NOT SCALE

NO.	DATE	REVISION	BY
00	10/2016	ORIGINAL ISSUE	ATB

JME
John M. McDonald Engineering, P.C.
a member of PRIME Group
New York Office
7 South Church Street Schenectady, New York 12305
Ph: 518 382 1774 Fax: 518 382 1776
www.mcdonaldengineers.com www.primeeng.com

PROJ. ENGR.: ATB | DRAWN BY: BSN | CHECKED BY: JMM

LICENSED PROFESSIONAL ENGINEER JOHN M. McDONALD NO. 54928 STATE OF NEW YORK

UNAUTHORIZED ALTERATIONS TO THIS DOCUMENT IS A VIOLATION OF SECTION 7209 SUBDIVISION 2 OF NEW YORK STATE EDUCATION LAW

MONTGOMERY COUNTY

CULVERT REPLACEMENT

CONTRACT NO. 3 - TOWN OF AMSTERDAM CULVERT REPLACEMENT
CONTRACT NO. 4 - TOWN OF FLORIDA CULVERT REPLACEMENT

SHEET TITLE:

SHELLSTONE ROAD PROFILE

SCALE: AS SHOWN

FILE NO.: 134-1601-273

DATE: OCTOBER 2016

SHEET NO.: B23

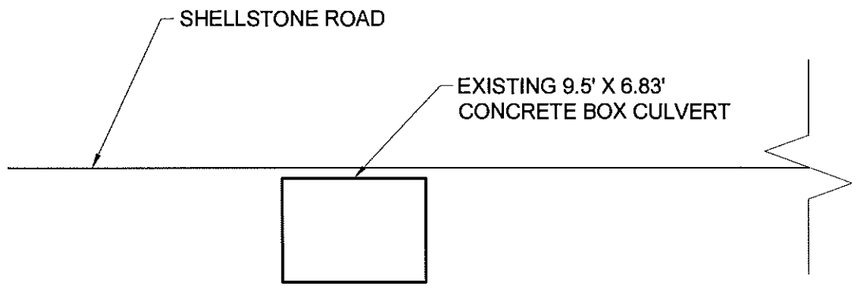

A
B24
EXISTING CROSS SECTION

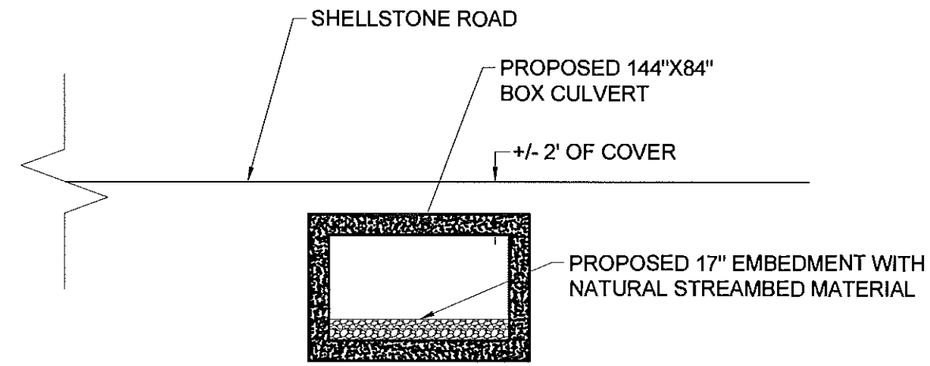

B
B24
PROPOSED CROSS SECTION

NO.	DATE	REVISION	BY
00	10/2016	ORIGINAL ISSUE	ATB

JME
John M. McDonald Engineering, P.C.
a member of PRIME Group®
New York Office
7 South Church Street Schenectady, New York 12305
Ph: 518 382 1774 Fax: 518 382 1776
www.mcdonaldengineers.com www.primeeng.com

PROJ. ENGR.: ATB | DRAWN BY: BSN | CHECKED BY: JMM

UNAUTHORIZED ALTERATIONS TO THIS DOCUMENT IS A VIOLATION OF SECTION 7209 SUBDIVISION 2 OF NEW YORK STATE EDUCATION LAW

MONTGOMERY COUNTY

CULVERT REPLACEMENT

CONTRACT NO. 3 - TOWN OF AMSTERDAM CULVERT REPLACEMENT
CONTRACT NO. 4 - TOWN OF FLORIDA CULVERT REPLACEMENT

SHEET TITLE:

SHELLSTONE ROAD
CROSS SECTIONS

SCALE: AS SHOWN
FILE NO.: 134-1601-276
DATE: OCTOBER 2016
SHEET NO.: B24

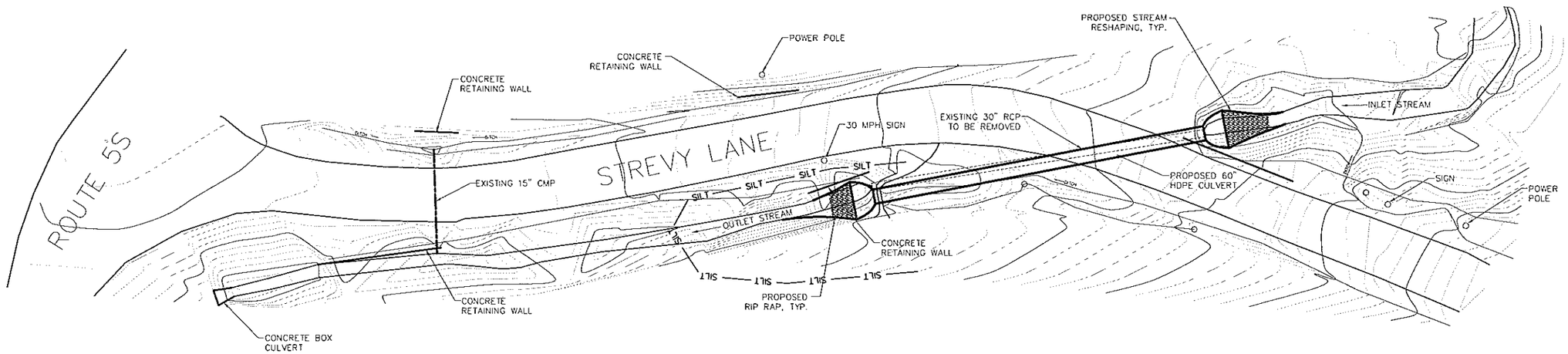

GRAPHIC SCALE
20.0 0 10.0 20.0 40.0

NO.	DATE	REVISION	BY
00	10/2016	ORIGINAL ISSUE	ATB

JME
John M. McDonald Engineering, P.C.
a member of PRIME Group®
New York Office
7 South Church Street Schenectady, New York 12305
Ph: 518 382 1774 Fax: 518 382 1776
www.mcdonaldengineers.com www.primeeng.com

PROJ. ENGR.: ATB | DRAWN BY: BSN | CHECKED BY: JMM

JOHN M. McDONALD LICENSED PROFESSIONAL ENGINEER NO. 54956 STATE OF NEW YORK

UNAUTHORIZED ALTERATIONS TO THIS DOCUMENT IS A VIOLATION OF SECTION 7209 SUBDIVISION 2 OF NEW YORK STATE EDUCATION LAW

MONTGOMERY COUNTY

CULVERT REPLACEMENT

CONTRACT NO. 3 - TOWN OF AMSTERDAM CULVERT REPLACEMENT
CONTRACT NO. 4 - TOWN OF FLORIDA CULVERT REPLACEMENT

SHEET TITLE:

STREVY LANE
SITE PLAN

SCALE: AS SHOWN
FILE NO.: 134-1601-280
DATE: OCTOBER 2016
SHEET NO.: B25

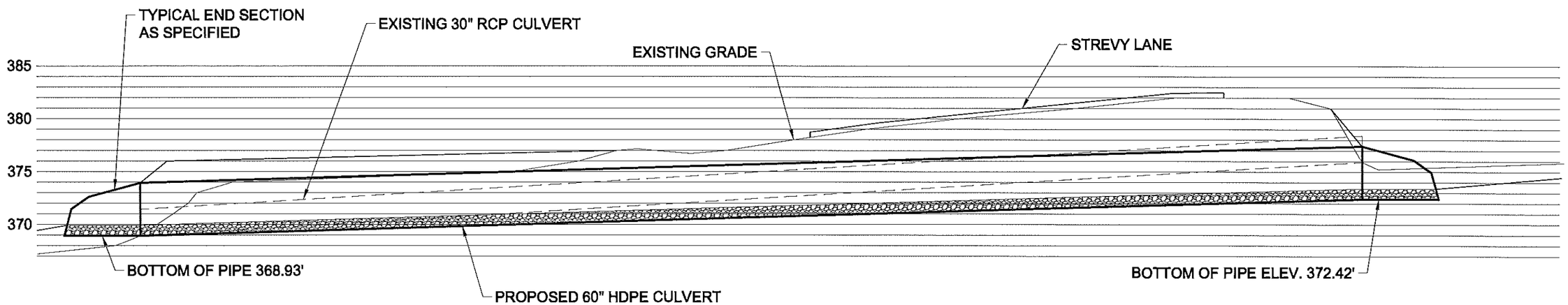

A
B26

STREVY LANE CULVERT PROFILE

GRAPHIC SCALE
5.0 0 2.5 5.0 10.0

NO.	DATE	REVISION	BY
00	10/2016	ORIGINAL ISSUE	ATB

JME
John M. McDonald Engineering, P.C.
a member of PRIME Group®
New York Office
7 South Church Street Schenectady, New York 12305
Ph: 518 382 1774 Fax: 518 382 1776
www.mcdonaldengineers.com www.primeeng.com

PROJ. ENGR.: ATB | DRAWN BY: BSN | CHECKED BY: JMM

UNAUTHORIZED ALTERATIONS TO THIS DOCUMENT IS A VIOLATION OF SECTION 7209 SUBDIVISION 2 OF NEW YORK STATE EDUCATION LAW

MONTGOMERY COUNTY

CULVERT REPLACEMENT

CONTRACT NO. 3 - TOWN OF AMSTERDAM CULVERT REPLACEMENT
CONTRACT NO. 4 - TOWN OF FLORIDA CULVERT REPLACEMENT

SHEET TITLE:
STREVY LANE PROFILE

SCALE: AS SHOWN
FILE NO.: 134-1601-283
DATE: OCTOBER 2016
SHEET NO.: B26

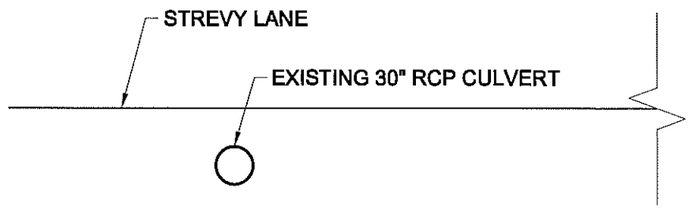

A
B27
EXISTING CROSS SECTION

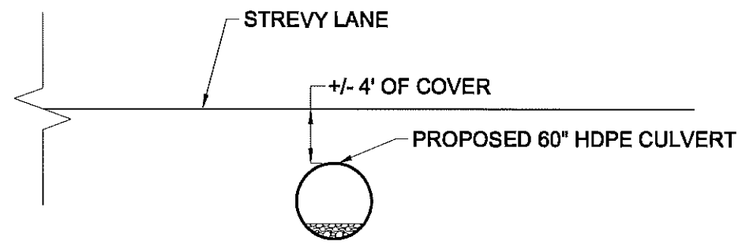

B
B27
PROPOSED CROSS SECTION

NO.	DATE	REVISION	BY
00	10/2016	ORIGINAL ISSUE	ATB

JME
John M. McDonald Engineering, P.C.
a member of PRIME Group
New York Office
7 South Church Street Schenectady, New York 12305
Ph: 518 382 1774 Fax: 518 382 1776
www.mcdonaldengineers.com www.primeeng.com

PROJ. ENGR.: ATB | DRAWN BY: BSN | CHECKED BY: JMM

UNAUTHORIZED ALTERATIONS TO THIS DOCUMENT IS A VIOLATION OF SECTION 7209 SUBDIVISION 2 OF NEW YORK STATE EDUCATION LAW

MONTGOMERY COUNTY

CULVERT REPLACEMENT

CONTRACT NO. 3 - TOWN OF AMSTERDAM CULVERT REPLACEMENT
CONTRACT NO. 4 - TOWN OF FLORIDA CULVERT REPLACEMENT

SHEET TITLE:

STREVY LANE CROSS SECTIONS

SCALE: AS SHOWN
FILE NO.: 134-1601-286
DATE: OCTOBER 2016
SHEET NO.: B27

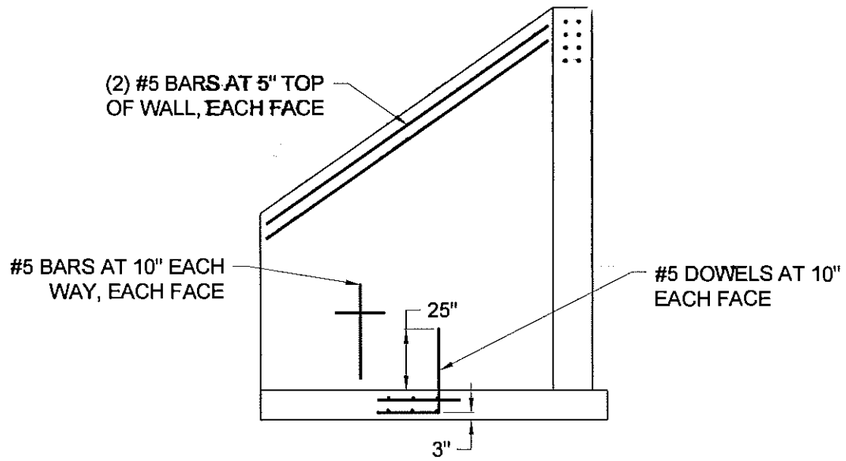

A / A4 WING WALL DETAIL
DO NOT SCALE

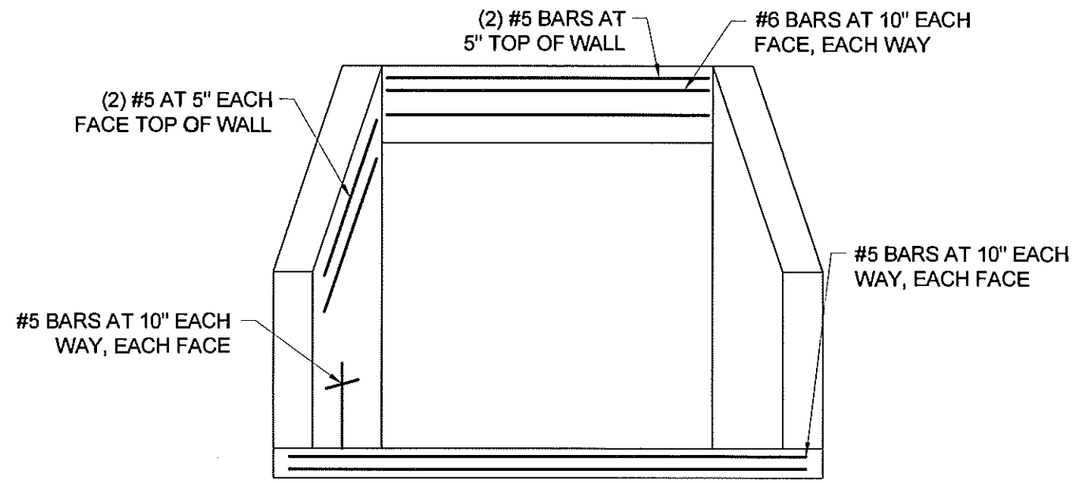

B / A4 HEAD WALL DETAIL
DO NOT SCALE

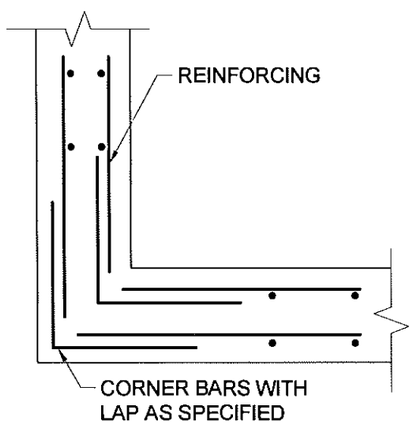

C / A4 CORNER DETAIL
DO NOT SCALE

REINFORCEMENT NOTES:

1. COVER SHALL BE 3" UNLESS NOTED OTHERWISE

2. BAR LAPS SHALL BE 40 BAR DIAMETERS UNLESS NOTED OTHERWISE

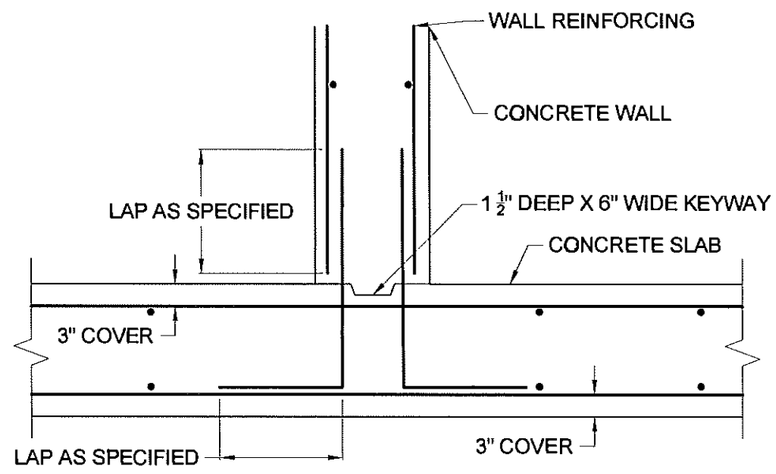

D / A4 SLAB TO WALL DETAIL
DO NOT SCALE

NO.	DATE	REVISION	BY
00	10/2016	ORIGINAL ISSUE	ATB

JME
John M. McDonald Engineering, P.C.
a member of PRIME Group
New York Office
7 South Church Street Schenectady, New York 12305
Ph: 518 382 1774 Fax: 518 382 1776
www.mcdonaldengineers.com www.primeeng.com

PROJ. ENGR.: ATB | DRAWN BY: BSN | CHECKED BY: JMM

UNAUTHORIZED ALTERATIONS TO THIS DOCUMENT IS A VIOLATION OF SECTION 7209 SUBDIVISION 2 OF NEW YORK STATE EDUCATION LAW

MONTGOMERY COUNTY

MIAMI AVENUE CULVERT REPLACEMENT

CONTRACT NO. 1 - CULVERT MATERIALS
CONTRACT NO. 2 - GENERAL CONSTRUCTION

SHEET TITLE:

CONCRETE DETAILS

SCALE: AS SHOWN
FILE NO.: 134-1601-130
DATE: OCTOBER 2016
SHEET NO.: C1

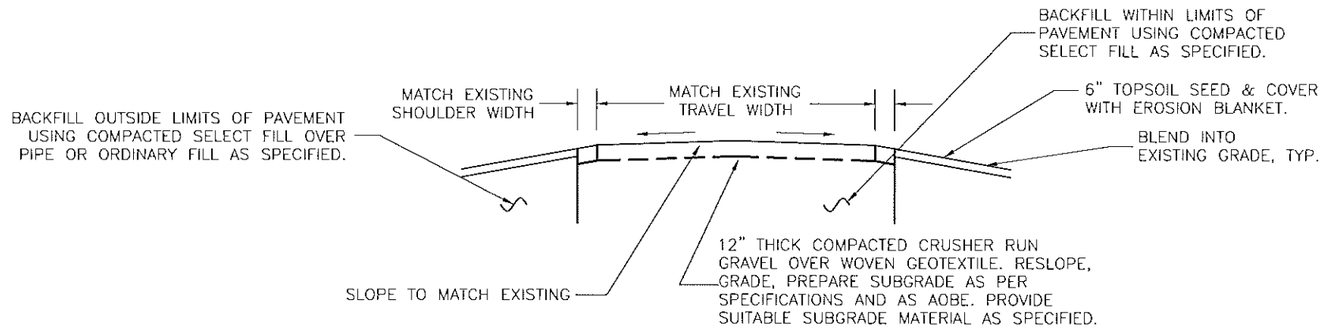

A / C2 ROADWAY DETAIL

NOT TO SCALE

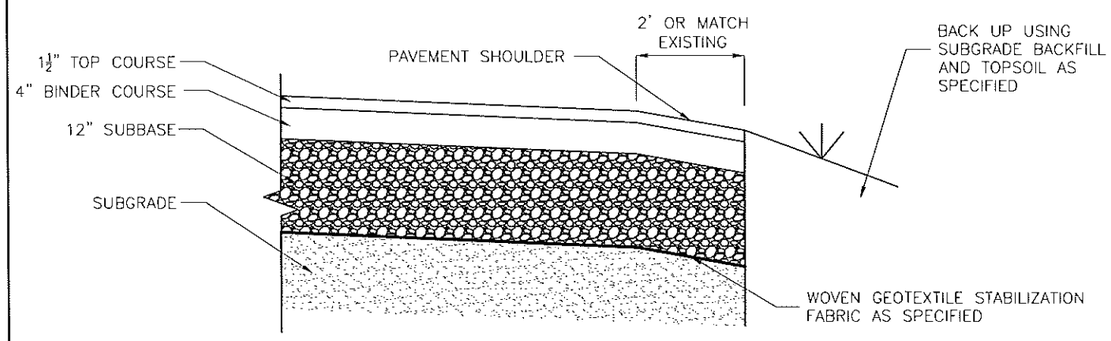

B / C2 PAVING DETAIL W/ PAVED SHOULDER

NOT TO SCALE

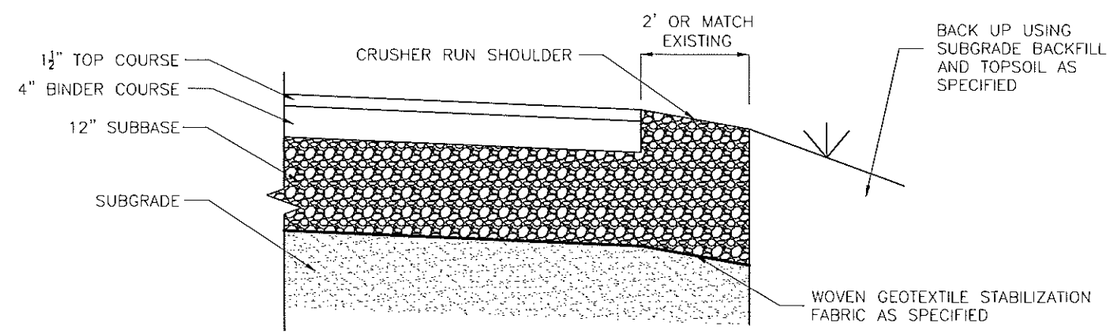

C / C2 PAVING DETAIL W/ UNPAVED SHOULDER

NOT TO SCALE

NO.	DATE	REVISION	BY
00	10/2016	ORIGINAL ISSUE	ATB

JME JOHN M. MCDONALD ENGINEERING, P.C.
7 South Church Street Schenectady, New York 12305
Ph: 518 382 1774 Fax: 518 382 1776 www.mcdonaldengineers.com

PROJ. ENGR.: ATB | DRAWN BY: BSN | CHECKED BY: JMM

UNAUTHORIZED ALTERATIONS TO THIS DOCUMENT IS A VIOLATION OF SECTION 7209 SUBDIVISION 2 OF NEW YORK STATE EDUCATION LAW

MONTGOMERY COUNTY

CULVERT REPLACEMENT

CONTRACT NO. 3 - TOWN OF AMSTERDAM CULVERT REPLACEMENT
CONTRACT NO. 4 - TOWN OF FLORIDA CULVERT REPLACEMENT

SHEET TITLE:

PAVING DETAILS

SCALE: AS SHOWN

FILE NO.: 134-1601-310

DATE: OCTOBER 2016

SHEET NO.: C2

IPaC **U.S. Fish & Wildlife Service**

IPaC resource list

Location

Montgomery County, New York

Local office

New York Ecological Services Field Office

(607) 753-9334
(607) 753-9699

3817 Luker Road
Cortland, NY 13045-9349

http://www.fws.gov/northeast/nyfo/es/section7.htm

Not for consultation

Endangered species

This resource list is for informational purposes only and should not be used for planning or analyzing project level impacts.

Section 7 of the Endangered Species Act **requires** Federal agencies to *"request of the Secretary information whether any species which is listed or proposed to be listed may be present in the area of such proposed action"* for any project that is conducted, permitted, funded, or licensed by any Federal agency.

A letter from the local office and a species list which fulfills this requirement can only be obtained by requesting an official species list either from the Regulatory Review section in IPaC or from the local field office directly.

For project evaluations that require USFWS concurrence/review, please return to the IPaC website and request an official species list by creating a project and making a request from the Regulatory Review section.

Listed species

[1] are managed by the Endangered Species Program of the U.S. Fish and Wildlife Service.

1. Species listed under the Endangered Species Act are threatened or endangered; IPaC also shows species that are candidates, or proposed, for listing. See the listing status page for more information.

The following species are potentially affected by activities in this location:

Mammals

NAME	STATUS
Northern Long-eared Bat Myotis septentrionalis **No critical habitat** has been designated for this species. http://ecos.fws.gov/ecp/species/9045	Threatened

Not for consultation

Critical habitats

Potential effects to critical habitat(s) in this location must be analyzed along with the endangered species themselves.

THERE ARE NO CRITICAL HABITATS AT THIS LOCATION.

Migratory birds

Birds are protected under the Migratory Bird Treaty Act

[1] and the Bald and Golden Eagle Protection Act[2].

Any activity that results in the take (to harass, harm, pursue, hunt, shoot, wound, kill, trap, capture, or collect, or to attempt to engage in any such conduct) of migratory birds or eagles is prohibited unless authorized by the U.S. Fish and Wildlife Service

[3]. There are no provisions for allowing the take of migratory birds that are unintentionally killed or injured.

Any person or organization who plans or conducts activities that may result in the take of migratory birds is responsible for complying with the appropriate regulations and implementing appropriate conservation measures.

---

1. The Migratory Birds Treaty Act of 1918.
2. The Bald and Golden Eagle Protection Act of 1940.
3. 50 C.F.R. Sec. 10.12 and 16 U.S.C. Sec. 668(a)

Additional information can be found using the following links:

- Birds of Conservation Concern http://www.fws.gov/birds/management/managed-species/birds-of-conservation-concern.php
- Conservation measures for birds http://www.fws.gov/birds/management/project-assessment-tools-and-guidance/conservation-measures.php
- Year-round bird occurrence data http://www.birdscanada.org/birdmon/default/datasummaries.jsp

Not for consultation

The migratory birds species listed below are species of particular conservation concern (e.g. Birds of Conservation Concern) that may be potentially affected by activities in this location, not a list of every bird species you may find in this location. Although it is important to try to avoid and minimize impacts to all birds, special attention should be made to avoid and minimize impacts to birds of priority concern. To view available data on other bird species that may occur in your project area, please visit the AKN Histogram Tools and Other Bird Data Resources.

NAME	SEASON(S)
American Bittern *Botaurus lentiginosus* http://ecos.fws.gov/ecp/species/6582	Breeding
Bald Eagle *Haliaeetus leucocephalus* http://ecos.fws.gov/ecp/species/1626	Year-round

Black-billed Cuckoo Coccyzus erythropthalmus http://ecos.fws.gov/ecp/species/9399	Breeding
Black-crowned Night-heron Nycticorax nycticorax http://ecos.fws.gov/ecp/species/6487	Breeding
Blue-winged Warbler Vermivora pinus	Breeding
Canada Warbler Wilsonia canadensis	Breeding
Golden-winged Warbler Vermivora chrysoptera http://ecos.fws.gov/ecp/species/8745	Breeding
Olive-sided Flycatcher Contopus cooperi http://ecos.fws.gov/ecp/species/3914	Breeding
Peregrine Falcon Falco peregrinus http://ecos.fws.gov/ecp/species/8831	Breeding
Pied-billed Grebe Podilymbus podiceps	Breeding
Prairie Warbler Dendroica discolor	Breeding
Red-headed Woodpecker Melanerpes erythrocephalus	Breeding
Short-eared Owl Asio flammeus http://ecos.fws.gov/ecp/species/9295	Wintering
Willow Flycatcher Empidonax traillii http://ecos.fws.gov/ecp/species/3482	Breeding
Wood Thrush Hylocichla mustelina	Breeding

Not for consultation

What does IPaC use to generate the list of migratory bird species potentially occurring in my specified location?

Landbirds:

Migratory birds that are displayed on the IPaC species list are based on ranges in the latest edition of the National Geographic Guide, Birds of North America (6th Edition, 2011 by Jon L. Dunn, and Jonathan Alderfer). Although these ranges are coarse in nature, a number of U.S. Fish and Wildlife Service migratory bird biologists agree that these maps are some of the best range maps to date. These ranges were clipped to a specific Bird Conservation Region (BCR) or USFWS Region/Regions, if it was indicated in the 2008 list of Birds of Conservation Concern (BCC) that a species was a BCC species only in a particular Region/Regions. Additional modifications have been made to some ranges based on more local or refined range information and/or information provided by U.S. Fish and Wildlife Service biologists with species expertise. All migratory birds that show in areas on land in IPaC are those that appear in the 2008 Birds of Conservation Concern report.

Atlantic Seabirds:

Ranges in IPaC for birds off the Atlantic coast are derived from species distribution models developed by the National Oceanic and Atmospheric Association (NOAA) National Centers for Coastal Ocean Science (NCCOS) using the best available seabird survey data for the offshore Atlantic Coastal region to date. NOAANCCOS assisted USFWS in developing seasonal species ranges from their models for specific use in IPaC. Some of these birds are not BCC species but were of interest for inclusion because they may occur in high abundance off the coast at different times throughout the year, which potentially makes them more susceptible to certain types of development and activities taking place in that area. For more refined details about the abundance and richness of bird species within your project area off the Atlantic Coast, see the Northeast Ocean Data Portal. The Portal also offers data and information about other types of taxa that may be helpful in your project review.

About the NOAANCCOS models: the models were developed as part of the NOAANCCOS project: Integrative Statistical Modeling and Predictive Mapping of Marine Bird Distributions and Abundance on the Atlantic Outer Continental Shelf. The models resulting from this project are being used in a number of decision-support/mapping products in order to help guide decision-making on activities off the Atlantic Coast with the goal of reducing impacts to migratory birds. One such product is the Northeast Ocean Data Portal, which can be used to explore details about the relative occurrence and abundance of bird species in a particular area off the Atlantic Coast.

All migratory bird range maps within IPaC are continuously being updated as new and better information becomes available.

Not for consultation

Can I get additional information about the levels of occurrence in my project area of specific birds or groups of birds listed in IPaC?

Landbirds:

The Avian Knowledge Network (AKN) provides a tool currently called the "Histogram Tool", which draws from the data within the AKN (latest,survey, point count, citizen science datasets) to create a view of relative abundance of species within a particular location over the course of the year. The results of the tool depict the frequency of detection of a species in survey events, averaged between multiple datasets within AKN in a particular week of the year. You may access the histogram tools through the Migratory Bird Programs AKN Histogram Tools webpage.

The tool is currently available for 4 regions (California, Northeast U.S., Southeast U.S. and Midwest), which encompasses the following 32 states: Alabama, Arkansas, California, Connecticut, Delaware, Florida, Georgia, Illinois, Indiana, Iowa, Kentucky, Louisiana, Maine, Maryland, Massachusetts, Michigan, Minnesota, Mississippi, Missouri, New Hampshire, New Jersey, New York, North, Carolina, Ohio, Pennsylvania, Rhode Island, South Carolina, Tennessee, Vermont, Virginia, West Virginia, and Wisconsin.

In the near future, there are plans to expand this tool nationwide within the AKN, and allow the graphs produced to appear with the list of trust resources generated by IPaC, providing you with an additional level of detail about the level of occurrence of the species of particular concern potentially occurring in your project area throughout the course of the year.

Atlantic Seabirds:

For additional details about the relative occurrence and abundance of both individual bird species and groups of bird species within your project area off the Atlantic Coast, please visit the Northeast Ocean Data Portal. The Portal also offers data and information about other taxa besides birds that may be helpful to you in your project review. Alternately, you may download the bird model results files underlying the portal maps through the NOAANCCOS Integrative Statistical Modeling and Predictive Mapping of Marine Bird Distributions and Abundance on the Atlantic Outer Continental Shelf project webpage.

Facilities

Wildlife refuges

Any activity proposed on National Wildlife Refuge lands must undergo a 'Compatibility Determination' conducted by the Refuge. Please contact the individual Refuges to discuss any questions or concerns.

Not for consultation

THERE ARE NO REFUGES AT THIS LOCATION.

Fish hatcheries

THERE ARE NO FISH HATCHERIES AT THIS LOCATION.

Wetlands in the National Wetlands Inventory

Impacts to NWI wetlands and other aquatic habitats may be subject to regulation under

Section 404 of the Clean Water Act, or other State/Federal statutes.

For more information please contact the Regulatory Program of the local U.S. Army Corps of Engineers District.

This location overlaps the following wetlands:

FRESHWATER FORESTED/SHRUB WETLAND

PFO

FRESHWATER POND

PUS

A full description for each wetland code can be found at the National Wetlands Inventory website: https://ecos.fws.gov/ipac/wetlands/decoder

Not for consultation

Data limitations

The Service's objective of mapping wetlands and deepwater habitats is to produce reconnaissance level information on the location, type and size of these resources. The maps are prepared from the analysis of high altitude imagery. Wetlands are identified based on vegetation, visible hydrology and geography. A margin of error is inherent in the use of imagery; thus, detailed on-the-ground inspection of any particular site may result in revision of the wetland boundaries or classification established through image analysis.

The accuracy of image interpretation depends on the quality of the imagery, the experience of the image analysts, the amount and quality of the collateral data and the amount of ground truth verification work conducted. Metadata should be consulted to determine the date of the source imagery used and any mapping problems.

Wetlands or other mapped features may have changed since the date of the imagery or field work. There may be occasional differences in polygon boundaries or classifications between the information depicted on the map and the actual conditions on site.

Data exclusions

Certain wetland habitats are excluded from the National mapping program because of the limitations of aerial imagery as the primary data source used to detect wetlands. These habitats include seagrasses or submerged aquatic vegetation that are found in the intertidal and subtidal zones of estuaries and nearshore coastal waters. Some deepwater reef communities (coral or tuberficid worm reefs) have also been excluded from the inventory. These habitats, because of their depth, go undetected by aerial imagery.

Data precautions

Federal, state, and local regulatory agencies with jurisdiction over wetlands may define and describe wetlands in a different manner than that used in this inventory. There is no attempt, in either the design or products of this inventory, to define the limits of proprietary jurisdiction of any Federal, state, or local government or to establish the geographical scope of the regulatory programs of government agencies. Persons intending to engage in activities involving modifications within or adjacent to wetland areas should seek the advice of appropriate federal, state, or local agencies concerning specified agency regulatory programs and proprietary jurisdictions that may affect such activities.

Not for consultation

NEW YORK STATE DEPARTMENT OF ENVIRONMENTAL CONSERVATION

Division of Fish and Wildlife, New York Natural Heritage Program
625 Broadway, Fifth Floor, Albany, NY 12233-4757
P: (518) 402-8935 | F: (518) 402-8925
www.dec.ny.gov

February 24, 2017

Alicia Shultz
Governor's Office of Storm Recovery
38-40 State Street
Albany, NY 12207

Re: Montgomery County Culvert Replacement Project -- 11 locations
County: Montgomery Town/City: Amsterdam, Florida

Dear Ms. Shultz:

In response to your recent request, we have reviewed the New York Natural Heritage Program database with respect to the above project.

We have no records of rare or state-listed animals or plants, or significant natural communities at the project sites or in their immediate vicinities.

The absence of data does not necessarily mean that rare or state-listed species, significant natural communities, or other significant habitats do not exist on or adjacent to the proposed site. Rather, our files currently do not contain information that indicates their presence. For most sites, comprehensive field surveys have not been conducted. We cannot provide a definitive statement on the presence or absence of all rare or state-listed species or significant natural communities. Depending on the nature of the project and the conditions at the project site, further information from on-site surveys or other resources may be required to fully assess impacts on biological resources.

This response applies only to known occurrences of rare or state-listed animals and plants, significant natural communities, and other significant habitats maintained in the Natural Heritage database. Your project may require additional review or permits; for information regarding other permits that may be required under state law for regulated areas or activities (e.g., regulated wetlands), please contact the NYS DEC Region 4 Office, Division of Environmental Permits, as listed at www.dec.ny.gov/about/39381.html.

Sincerely,

Nicholas Conrad
Information Resources Coordinator
New York Natural Heritage Program

NEW YORK STATE OF OPPORTUNITY | Department of Environmental Conservation

NEW YORK STATE DEPARTMENT OF ENVIRONMENTAL CONSERVATION

Division of Fish and Wildlife, New York Natural Heritage Program
625 Broadway, Fifth Floor, Albany, NY 12233-4757
P: (518) 402-8935 | F: (518) 402-8925
www.dec.ny.gov

February 24, 2017

Alicia Shultz
Governor's Office of Storm Recovery
38-40 State Street
Albany, NY 12207

Re: Montgomery County Culvert Replacement Project -- 11 locations
County: Montgomery Town/City: Amsterdam, Florida

Dear Ms. Shultz:

In response to your recent request, we have reviewed the New York Natural Heritage Program database with respect to the above project.

We have no records of rare or state-listed animals or plants, or significant natural communities at the project sites or in their immediate vicinities.

The absence of data does not necessarily mean that rare or state-listed species, significant natural communities, or other significant habitats do not exist on or adjacent to the proposed site. Rather, our files currently do not contain information that indicates their presence. For most sites, comprehensive field surveys have not been conducted. We cannot provide a definitive statement on the presence or absence of all rare or state-listed species or significant natural communities. Depending on the nature of the project and the conditions at the project site, further information from on-site surveys or other resources may be required to fully assess impacts on biological resources.

This response applies only to known occurrences of rare or state-listed animals and plants, significant natural communities, and other significant habitats maintained in the Natural Heritage database. Your project may require additional review or permits; for information regarding other permits that may be required under state law for regulated areas or activities (e.g., regulated wetlands), please contact the NYS DEC Region 4 Office, Division of Environmental Permits, as listed at www.dec.ny.gov/about/39381.html.

Sincerely,

Nicholas Conrad
Information Resources Coordinator
New York Natural Heritage Program

NEW YORK STATE OF OPPORTUNITY | Department of Environmental Conservation

Governor's Office of
Storm Recovery

ANDREW M. CUOMO
Governor

LISA BOVA-HIATT
Executive Director

Via Electronic Mail

Re: Natural Heritage Compliance Process for the Montgomery County Culvert Replacement Project, Town of Florida and the Town of Amsterdam, Montgomery County, New York

To Whom it May Concern:

The Governor's Office of Storm Recovery (GOSR), acting under the auspices of New York State Homes and Community Renewal's (HCR) Housing Trust Fund Corporation (HTFC), on behalf of the Department of Housing & Urban Development (HUD), is conducting an environmental review under HUD's environmental review regulations (24 CFR Part 58) and New York State's Environmental Quality Review Act (SEQRA) for the Montgomery County Culvert Replacement Project, located in the Town of Florida and the Town of Amsterdam, Montgomery County, New York (see **Figures 1 and 2**).
The purpose of this letter is to request a search of the files of the New York Natural Heritage Program for records of the occurrence of any rare animals, plants, and natural communities and/or significant wildlife habitats in the vicinity of this project. The information we receive will be used in NEPA and SEQRA documentation and/or any permit applications. We will retain the confidentiality, as needed, of any information received.

Program Overview: In the Town of Amsterdam, the flood waters from Hurricane Irene eroded the banks of local creeks and caused property damage and washed out many roads. Storm water runoff down steep grades in the Town caused backups at undersized culverts. Portions of the existing storm water management system became clogged with debris and did not function during the storm events, resulting in localized flooding. Following the storms, during the New York Rising Community Reconstruction (NYRCR) planning process, the Town identified that improved storm water management systems are needed in these areas. The City of Amsterdam, Town of Amsterdam, and the Town of Florida developed a community vision to anticipate and mitigate flood risks, limit impacts to property and infrastructure when flooding is unavoidable, and respond efficiently and recover quickly, in a manner that protects vulnerable populations and our quality of life. The community presented goals to mitigate damage to transportation corridors and infrastructure and recommended upgrades to the storm water and sewer infrastructure throughout the Community. This project would reduce flooding and mitigate stream bank and roadway erosion that may result from rainfall that could not be accommodated by the existing undersized culverts.

Area of Potential Effect: The project will take place at the following 11 locations along roads in the Town of Florida and the Town of Amsterdam, Montgomery County, New York (see **Figure 1**):

- Culvert 4A at McKinney Road, approximately 1,600 feet north of Lost Valley Road in the Town of Florida;
- Culvert 4B at McKinney Road, approximately 3,200 feet north of Peck Road in the Town of Florida;
- Culvert 5B at Bullshead Road, approximately 450 feet north of Thayer Road in the Town of Florida;

- Culvert 6A at Pattersonville Road, approximately 100 feet south of Bullshead Road in the Town of Florida;
- Fort Hunter Road, approximately 560 feet southeast of Morris Road in the Town of Florida;
- Hartley Road, approximately 900 feet southeast of Snooks Corners Road in the Town of Florida;
- Langley Road, approximately 700 feet southwest of Thayer Road in the Town of Florida;
- McKay Road No. 1 at McKay Road, approximately 600 feet south of McDonald Drive in the Town of Amsterdam;
- McKay Road No. 2 at McKay Road, approximately 2,000 feet south of McDonald Drive in the Town of Amsterdam;
- Strevy Lane, approximately 1,100 feet northwest of its intersection with Fort Hunter Road in the Town of Florida; and
- Shellstone Road, approximately 200 feet southwest of State Route 30/Sulphur Springs Road in the Town of Florida.

Proposed Project Description: The Project would include replacement and realignment of 11 culverts on or along McKinney Road, Bullshead Road, Pattersonville Road, Fort Hunter Road, Hartley Road, Langley Road, McKay Road, Strevy Lane, and Shellstone Road in the Towns of Florida and Amsterdam, Montgomery County, New York. The smaller culverts would be made of high density polyethylene (HDPE) and the larger culverts would be four sided precast concrete box culverts. At several locations the project would include removal of existing headwalls, stream reshaping and installation of rip-rap at the inlet and outlet of the proposed culvert, and alignment correction. The culvert bottoms would have embedment (i.e., be filled to an appropriate depth) of natural streambed material (see attached **Preliminary Site Plans**). It is anticipated that construction would involve substantial earthwork, and temporary or permanent easements may be required. Construction would occur within the existing rights-of-way of each road to the extent feasible.

Compliance: According to information reviewed from the New York State Environmental Resource Mapper (ERM), the project area is not within a half mile of significant natural communities, and no rare plants or animals exist within the project area (see attached **Figure 3**). The proposed project would involve ground disturbance. As such, GOSR respectfully requests that the New York Natural Heritage Program review its records of concern for any rare or state-listed animals or plants, or significant natural communities, at this site or in its immediate vicinity. In addition, information regarding the presence of any other species or habitats of special concern in the vicinity of the proposed projects is also requested.

If you have questions or require additional information regarding this request, please contact me at (518) 474-0647 or Alicia.Shultz@nyshcr.org. Thank you for your time and consideration.

Sincerely,

Alicia Shultz
Community Developer - Environmental Services
Governor's Office of Storm Recovery
NYS Homes and Community Renewal

Enclosures:
Figure 1: Project Location Map
Figure 2. Topographic Map
Figure 3: Environmental Resource Mapper Findings
Preliminary Site Plans

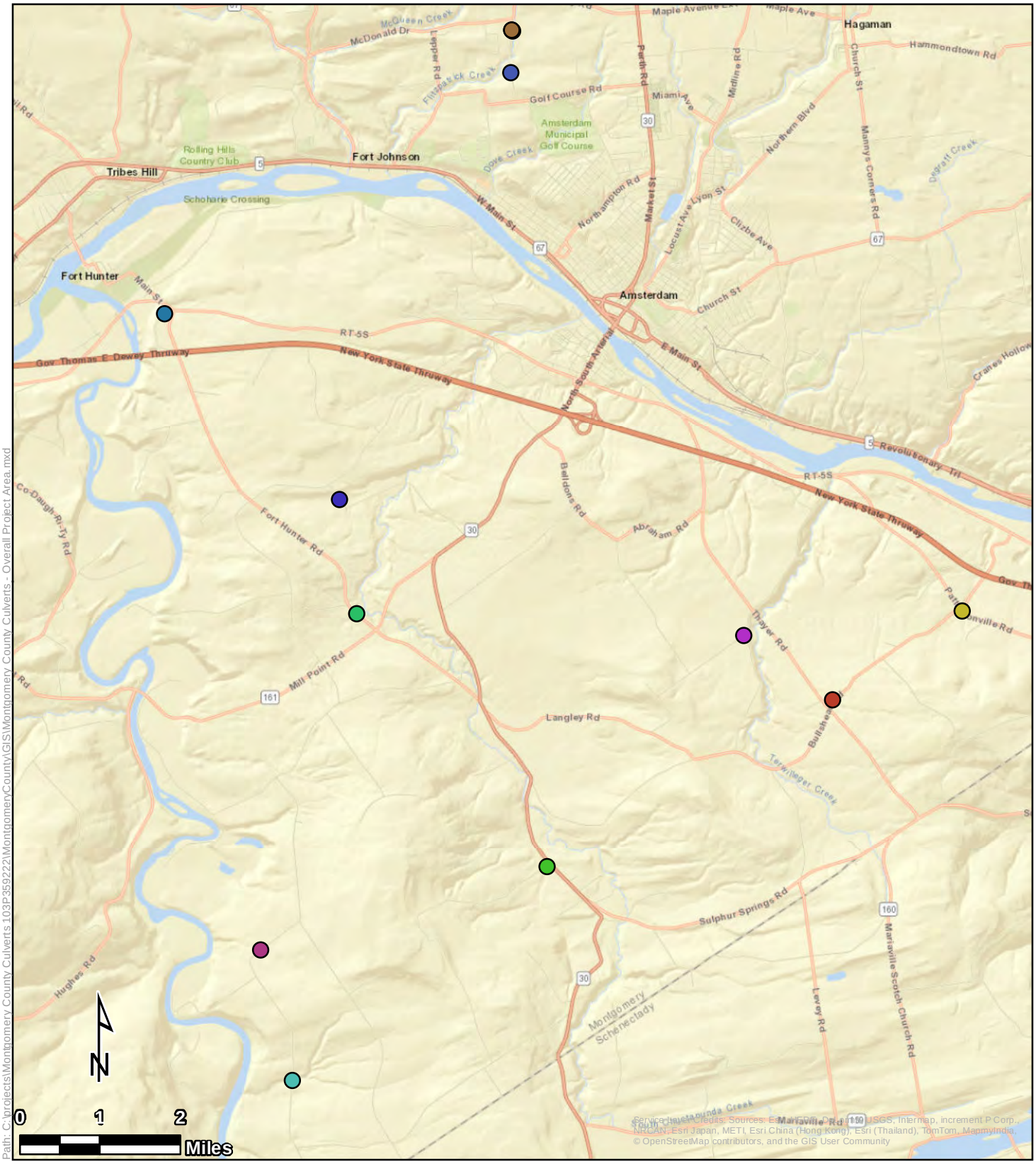

Legend

Culvert Locations

- Bullshead Road
- Fort Hunter Road
- Hartley Road
- Langley Road
- McKay Road 1
- McKay Road 2
- McKinney Road 4A
- McKinney Road 4B
- Pattersonville Road
- Shellstone Road
- Strevy Lane

Project Location Map

Montgomery County Culverts
Bullshead Road, Fort Hunter Road, Hartley Road, Langley Road, McKay Road, McKinney Road, Pattersonville Road, Shellstone Road, and Strevy Lane
Montgomery County, New York

Figure 1

Tetra Tech, Inc

Path: C:\projects\Montgomery County Culverts 109P359222\MontgomeryCounty\GIS\Montgomery County Culverts - Topographic Map.mxd

Legend

Culvert Locations

- Bullshead Road
- Fort Hunter Road
- Hartley Road
- Langley Road
- McKay Road 1
- McKay Road 2
- McKinney Road 4A
- McKinney Road 4B
- Pattersonville Road
- Shellstone Road
- Strevy Lane

Topographic Map

Montgomery County Culverts
Bullshead Road, Fort Hunter Road, Hartley Road, Langley Road, McKay Road, McKinney Road, Pattersonville Road, Shellstone Road, and Strevy Lane
Montgomery County, New York

Tetra Tech, Inc

Figure 2

NEW YORK STATE DEPARTMENT OF ENVIRONMENTAL CONSERVATION

Environmental Resource Mapper

Base Map: Topographical

Search

Tools

Layers and Legend

☑ **All Layers**

☑ Unique Geological Features

☑ *Waterbody Classifications for Rivers/Streams*

Other Wetland Layers

Reference Layers

Tell Me More...

Need A Permit?

Contacts

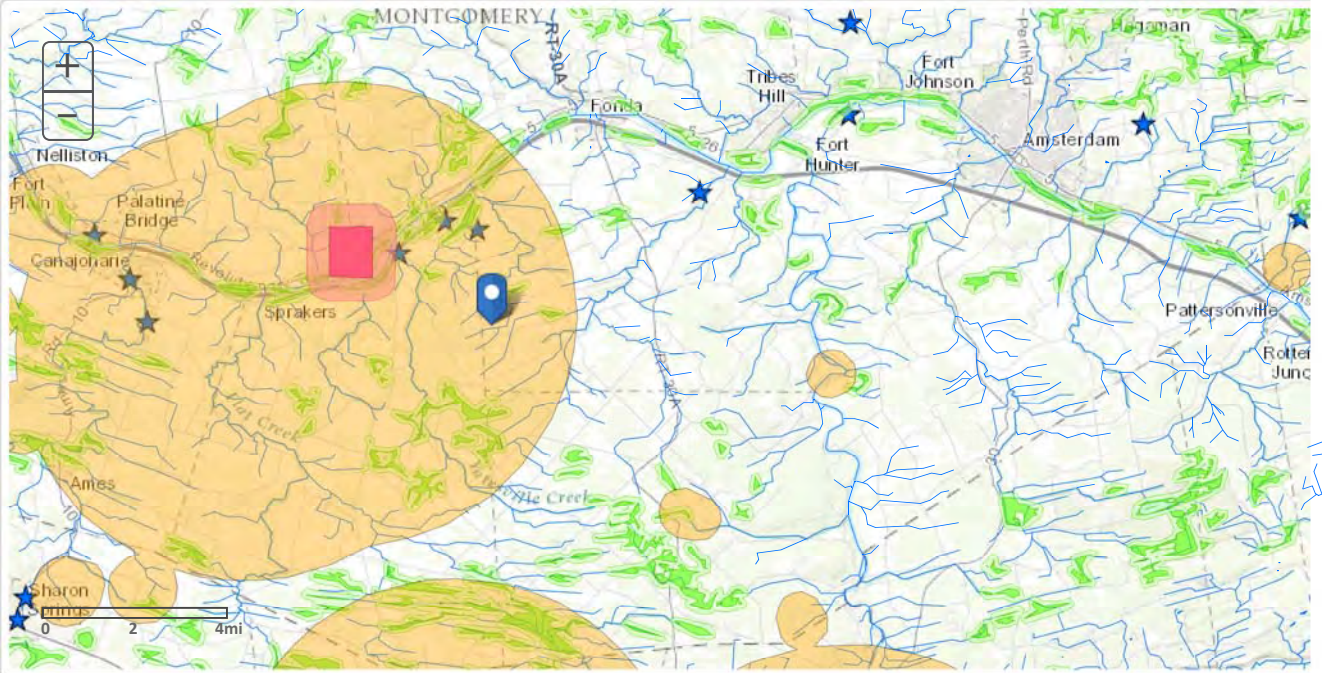

Figure 3

MONTGOMERY COUNTY
CULVERT REPLACEMENT

CONTRACT NO. 3 - TOWN OF AMSTERDAM CULVERT REPLACEMENT
CONTRACT NO. 4 - TOWN OF FLORIDA CULVERT REPLACEMENT

COUNTY LEGISLATURE

Matthew L. Ossenfort	County Executive
Martin P. Kelly	Legislator District 1
Thomas L. Quackenbush	Legislator District 2
Roy S. Dimond	Legislator District 3
Ryan B. Weitz	Legislator District 4
Terry A. Bieniek	Legislator District 5
John M. Duchessi	Legislator District 6
Barbara S. Wheeler	Legislator District 7
Joseph M. Isabel	Legislator District 8
Robert A. Purtell	Legislator District 9
Bart A. Tessiero	Town of Amsterdam Highway Superintendent
William Weller	Town of Florida Highway Superintendent
Paul Clayburn	Commissioner of Public Works
Cheryl A. Reese	Clerk of the Legislature

JME
John M. McDonald Engineering
a member of PRIME Group®

New York Office
7 South Church Street Schenectady, New York 12305
Ph: 518 382 1774 Fax: 518 382 1776
www.mcdonaldengineers.com www.primeeng.com

LICENSED PROFESSIONAL ENGINEER
JOHN M. McDONALD
NO. 54506
STATE OF NEW YORK

Draft

REF. NO. 134-1601-000

Review Issue: October 2016

PROJECT NO. 134-1601

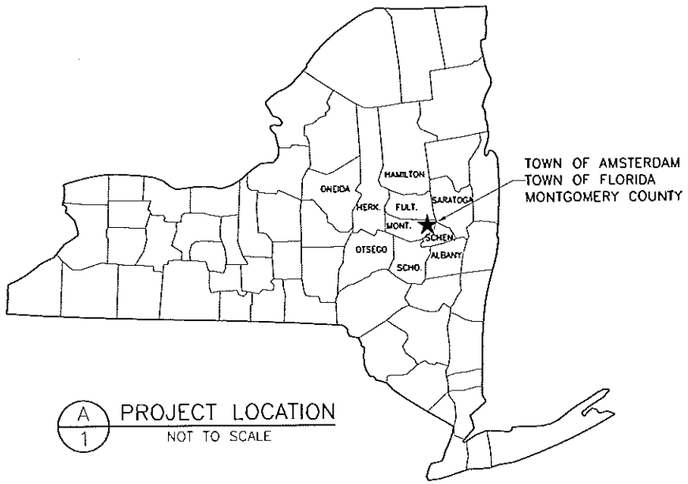

A/1 PROJECT LOCATION
NOT TO SCALE

DRAWING INDEX

SHEET #	TITLE	REFERENCE NO.	REV. NO.
	CONTRACT NO. 3 – TOWN OF AMSTERDAM CULVERT REPLACEMENT		
	CONTRACT NO. 4 – TOWN OF FLORIDA CULVERT REPLACEMENT		
	GENERAL		
1	COVER	134-1601-000	00
2	INDEX & PROJECT LOCATION	134-1601-010	00
3	CULVERT LOCATION MAP	134-1601-020	00
4	EROSION CONTROL DETAILS	134-1601-030	00
	SECTION A – TOWN OF AMSTERDAM		
A1	MCKAY ROAD 1 SITE PLAN	134-1601-100	00
A2	MCKAY ROAD 1 PROFILES	134-1601-110	00
A3	MCKAY ROAD 1 CROSS SECTIONS	134-1601-120	00
A4	MCKAY ROAD 2 SITE PLAN	134-1601-130	00
A5	MCKAY ROAD 2 PROFILE	134-1601-140	00
A6	MCKAY ROAD 2 CROSS SECTIONS	134-1601-150	00
	SECTION B – TOWN OF FLORIDA		
B1	BULLSHEAD ROAD SITE PLAN	134-1601-200	00
B2	BULLSHEAD ROAD PROFILE	134-1601-203	00
B3	BULLSHEAD ROAD CROSS SECTIONS	134-1601-206	00
B4	FORT HUNTER ROAD SITE PLAN	134-1601-210	00
B5	FORT HUNTER ROAD PROFILE	134-1601-213	00
B6	FORT HUNTER ROAD CROSS SECTIONS	134-1601-216	00
B7	HARTLEY ROAD SITE PLAN	134-1601-220	00
B8	HARTLEY ROAD PROFILE	134-1601-223	00
B9	HARTLEY ROAD CROSS SECTIONS	134-1601-226	00
B10	LANGLEY ROAD SITE PLAN	134-1601-230	00
B11	LANGLEY ROAD PROFILE	134-1601-233	00
B12	LANGLEY ROAD CROSS SECTIONS	134-1601-236	00
B13	MCKINNEY ROAD 4A SITE PLAN	134-1601-240	00
B14	MCKINNEY ROAD 4A PROFILE	134-1601-243	00
B15	MCKINNEY ROAD 4A CROSS SECTIONS	134-1601-246	00
B16	MCKINNEY ROAD 4B SITE PLAN	134-1601-250	00
B17	MCKINNEY ROAD 4B PROFILE	134-1601-253	00
B18	MCKINNEY ROAD 4B CROSS SECTIONS	134-1601-256	00
B19	PATTERSONVILLE ROAD SITE PLAN	134-1601-260	00
B20	PATTERSONVILLE ROAD PROFILE	134-1601-263	00
B21	PATTERSONVILLE ROAD CROSS SECTIONS	134-1601-266	00
B22	SHELLSTONE ROAD SITE PLAN	134-1601-270	00
B23	SHELLSTONE ROAD PROFILE	134-1601-273	00
B24	SHELLSTONE ROAD CROSS SECTIONS	134-1601-276	00
B25	STREVY LANE SITE PLAN	134-1601-280	00
B26	STREVY LANE PROFILE	134-1601-283	00
B27	STREVY LANE CROSS SECTIONS	134-1601-286	00
	SECTION C – DETAILS		
C1	CONCRETE DETAILS	134-1601-300	00
C2	PAVING DETAILS	134-1601-310	00

GENERAL CONTRACT DRAWING NOTES:

1. PROJECT SITE PLANS ARE BASED ON SURVEYS BY JOHN M. MCDONALD ENGINEERING.

2. CONTRACTOR MUST COORDINATE WORK WITH MONTGOMERY COUNTY DPW AND MINIMIZE INCONVENIENCES.

3. CONTRACTOR SHALL BE RESPONSIBLE FOR REPAIR OF ANY DAMAGE TO THE FACILITIES AND APPURTENANCES RESULTING FROM THE CONTRACTOR'S WORK AT NO COST TO OWNER.

4. ALL PRECAUTIONS SHALL BE TAKEN TO PROTECT THE ENVIRONMENT IN ACCORDANCE WITH STATE, FEDERAL AND LOCAL REGULATIONS AND AS SPECIFIED IN THE CONTRACT DOCUMENTS.

5. CONTRACTOR SHALL CONTACT DIG SAFELY NEW YORK PRIOR TO COMMENCING WORK TO DETERMINE LOCATIONS OF UNDERGROUND UTILITIES. EXISTING UTILITIES ARE SHOWN IN THEIR RELATIVE POSITIONS AND ARE FOR INFORMATION ONLY. CONTRACTOR SHALL BE RESPONSIBLE FOR REPAIR OF ANY DAMAGE TO FACILITIES RESULTING FROM THE CONTRACTORS WORK AT NO COST TO OWNER.

6. CONTRACTOR SHALL RESTORE ALL LAWNS, DRIVEWAYS, ROADS, SHOULDERS, FENCES ETC. TO A CONDITION AT LEAST AS GOOD AS THEY WERE PRIOR TO CONSTRUCTION. DAMAGE SHALL BE REPAIRED AT CONTRACTOR'S EXPENSE.

7. NO WORK, STORAGE OR TRESPASS SHALL BE PERMITTED BEYOND THE BOUNDARIES OF OWNER'S EASEMENTS OR PROPERTY.

8. CONTRACTOR IS RESPONSIBLE FOR ALL TRAFFIC CONTROL, DUST CONTROL, AND PROTECTION OF PUBLIC FROM HAZARDS ASSOCIATED WITH THIS WORK DURING WORKING AND NON-WORKING HOURS.

9. CONTRACTOR SHALL SUPPORT ALL UTILITIES & STRUCTURES WHERE NECESSARY DUE TO WORK OF THIS CONTRACT.

10. EXTENT OF WORK IS INDICATED ON CONTRACT DRAWINGS AND SPECIFICATIONS. EACH CONTRACTOR IS RESPONSIBLE TO REVIEW EXTENT OF WORK BY OTHERS AND COORDINATE THEIR OWN WORK WITH WORK BY OTHER CONTRACTORS.

NO.	DATE	REVISION	BY
00	10/2016	ORIGINAL ISSUE	ATB

JME
John M. McDonald Engineering, P.C.
a member of PRIME Group
New York Office
7 South Church Street Schenectady, New York 12305
Ph: 518 382 1774 Fax: 518 382 1776
www.mcdonaldengineers.com www.primeeng.com

PROJ. ENGR.: ATB | DRAWN BY: BSN | CHECKED BY: JMM

JOHN M. MCDONALD LICENSED PROFESSIONAL ENGINEER NO. 54306 STATE OF NEW YORK

UNAUTHORIZED ALTERATIONS TO THIS DOCUMENT IS A VIOLATION OF SECTION 7209 SUBDIVISION 2 OF NEW YORK STATE EDUCATION LAW

MONTGOMERY COUNTY

CULVERT REPLACEMENT

CONTRACT NO. 3 - TOWN OF AMSTERDAM CULVERT REPLACEMENT
CONTRACT NO. 4 - TOWN OF FLORIOA CULVERT REPLACEMENT

SHEET TITLE:

INDEX & PROJECT LOCATION

SCALE: AS SHOWN

FILE NO.: 134-1601-010

DATE: OCTOBER 2016

SHEET NO.: 2

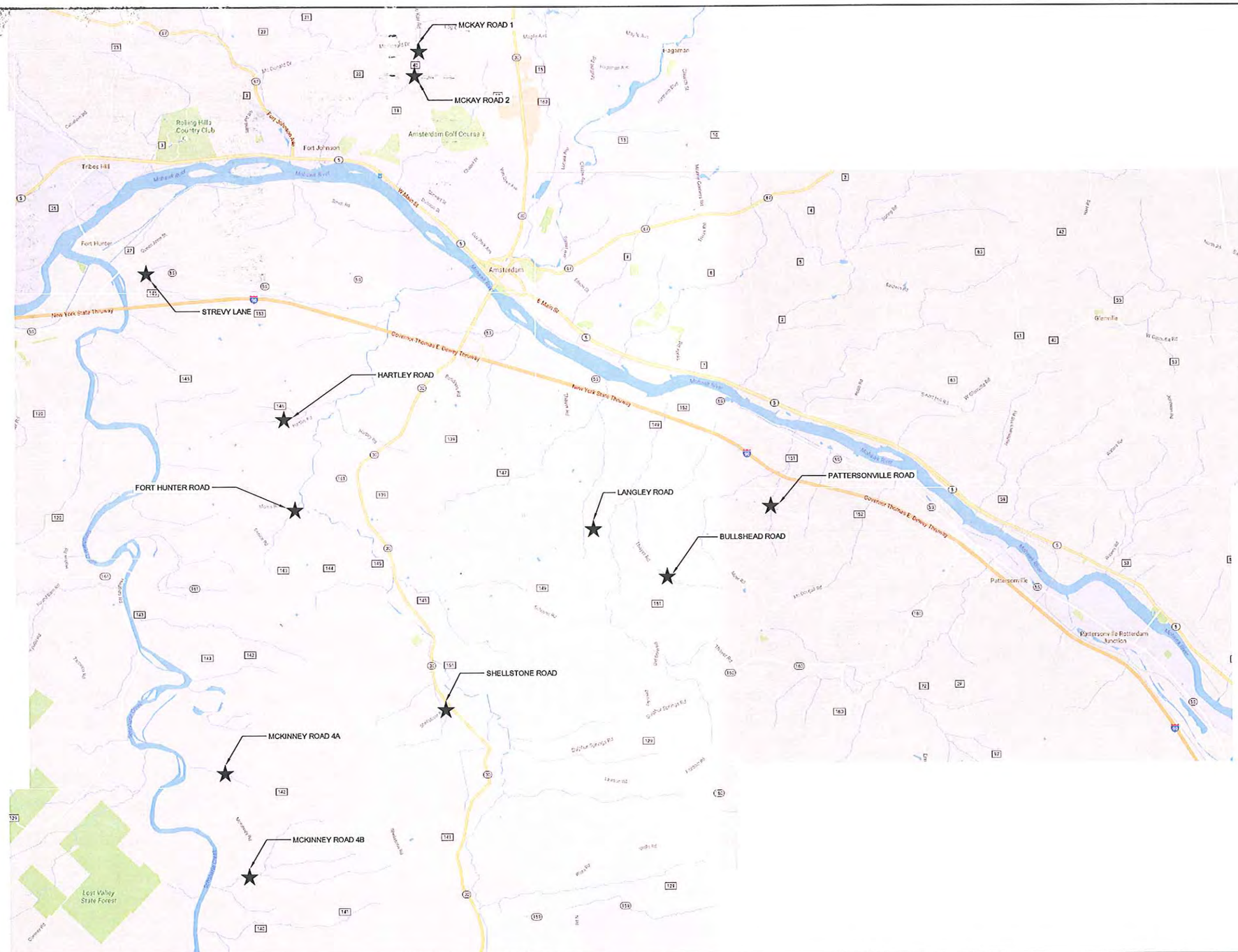

NO.	DATE	REVISION	BY
00	10/2016	ORIGINAL ISSUE	ATB

JME
John M. McDonald Engineering
a member of PRIME Group®

New York Office
7 South Church Street Schenectady, New York 12305
Ph: 518 382 1774 Fax: 518 382 1776
www.mcdonaldengineers.com www.primeeng.com

PROJ. ENGR.: ATB | DRAWN BY: BSN | CHECKED BY: JMM

JOHN M. McDONALD PROFESSIONAL ENGINEER LICENSE NO. 54508 STATE OF NEW YORK

UNAUTHORIZED ALTERATIONS TO THIS DOCUMENT IS A VIOLATION OF SECTION 7209 SUBDIVISION 2 OF NEW YORK STATE EDUCATION LAW

MONTGOMERY COUNTY

CULVERT REPLACEMENT

CONTRACT NO. 3 - TOWN OF AMSTERDAM CULVERT REPLACEMENT
CONTRACT NO. 4 - TOWN OF FLORIDA CULVERT REPLACEMENT

SHEET TITLE:

CULVERT LOCATION MAP

SCALE: AS SHOWN

FILE NO.: 134-1601

DATE: OCTOBER 2016

SHEET NO.: 3

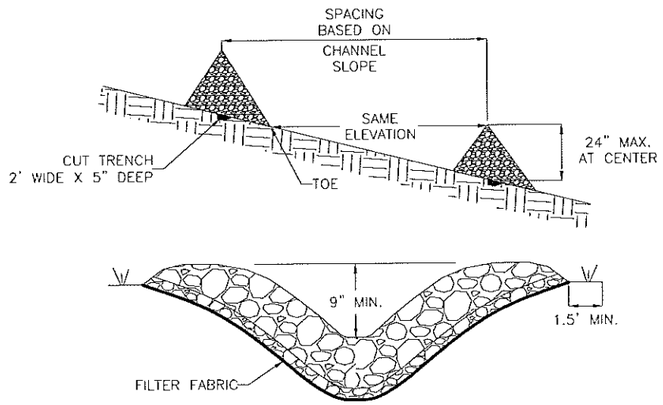

A/4 CHECK DAM DETAILS

NOT TO SCALE

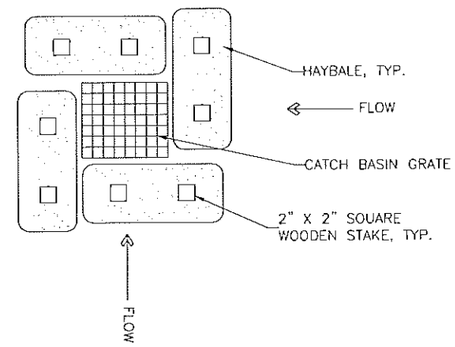

B/4 STRUCTURE EROSION CONTROL

NOT TO SCALE

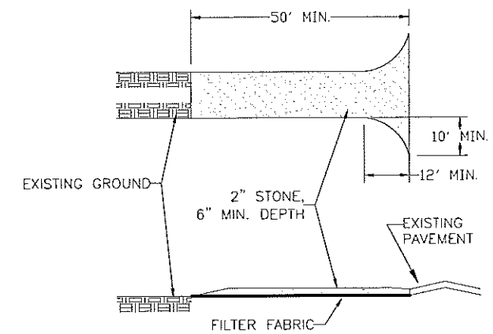

C/4 STABILIZED CONSTRUCTION ENTRANCE

NOT TO SCALE

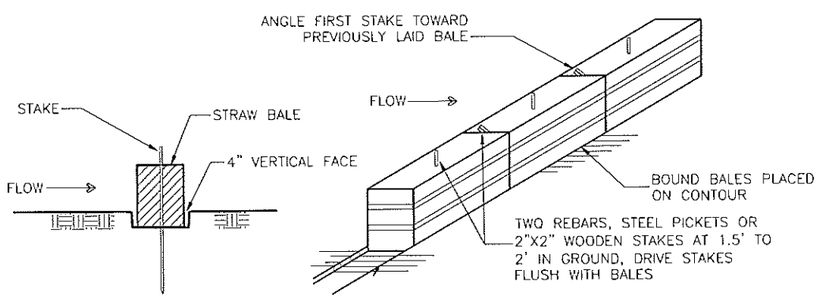

D/4 STRAW BALE DETAILS

NOT TO SCALE

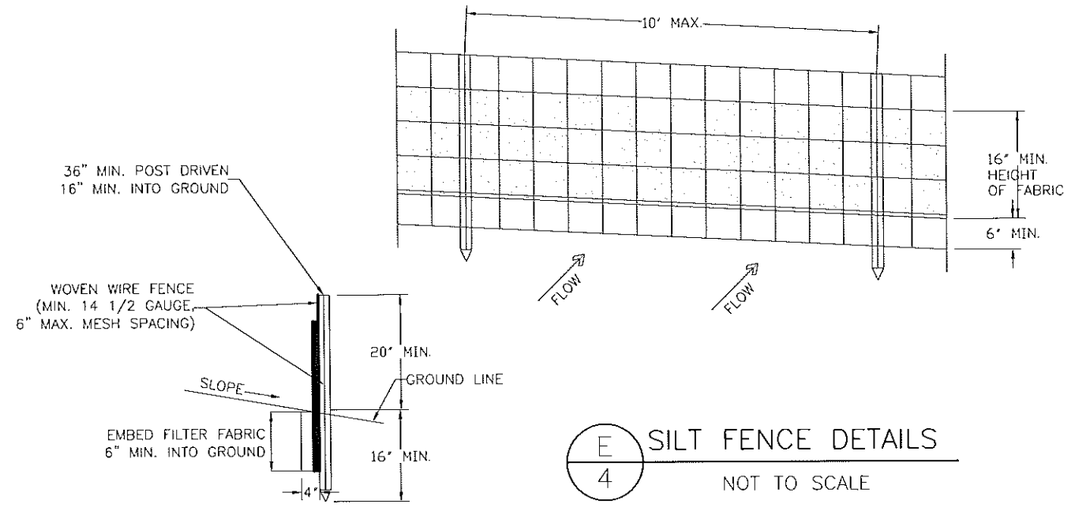

E/4 SILT FENCE DETAILS

NOT TO SCALE

SOIL EROSION AND STABILIZATION

1. DRAINAGE AREA NO MORE THAN 1/4 ACRE PER 100' OF STRAW BALE DIKE FOR SLOPES LESS THAN 25%.
2. BALES SHALL BE PLACED AT THE TOE OF SLOPE OR ON THE CONTOUR AND IN A ROW WITH ENDS TIGHTLY ABUTTING THE ADJACENT BALES.
3. EACH BALE SHALL BE EMBEDDED IN THE SOIL A MINIMUM OF 4 INCHES, AND PLACED SO THE BINDINGS ARE HORIZONTAL.
4. BALES SHALL BE SECURELY ANCHORED IN PLACE BY EITHER TWO STAKES OR RE-BARS DRIVENTHROUGH THE BALE. THE FIRST STAKE IN EACH BALE SHALL BE DRIVEN TOWARD THE PREVIOUSLY LAID BALE AT AN ANGLE TO FORCE THE BALES TOGETHER. STAKES SHALL BE DRIVEN FLUSH WITH THE BALE.
5. INSPECTION SHALL BE FREQUENT AND REPAIR REPLACEMENT SHALL BE MADE PROMPTLY AS NEEDED.
6. BALES SHALL BE REMOVED WHEN THEY HAVE SERVED THEIR USEFULNESS SO AS NOT TO BLOCK OR IMPEDE STORM FLOW OR DRAINAGE.

NO.	DATE	REVISION	BY
00	10/2016	ORIGINAL ISSUE	ATB

JME JOHN M. MCDONALD ENGINEERING, P.C.
7 South Church Street Schenectady, New York 12305
Ph: 518 382 1774 Fax: 518 382 1776 www.mcdonaldengineers.com

PROJ. ENGR.: ATB | DRAWN BY: BSN | CHECKED BY: JMM

UNAUTHORIZED ALTERATIONS TO THIS DOCUMENT IS A VIOLATION OF SECTION 7209 SUBDIVISION 2 OF NEW YORK STATE EDUCATION LAW

MONTGOMERY COUNTY

CULVERT REPLACEMENT

CONTRACT NO. 3 - TOWN OF AMSTERDAM CULVERT REPLACEMENT
CONTRACT NO. 4 - TOWN OF FLORIDA CULVERT REPLACEMENT

SHEET TITLE:

EROSION CONTROL DETAILS

SCALE: AS SHOWN

FILE NO.: 134-1601-030

DATE: OCTOBER 2016

SHEET NO.: 4

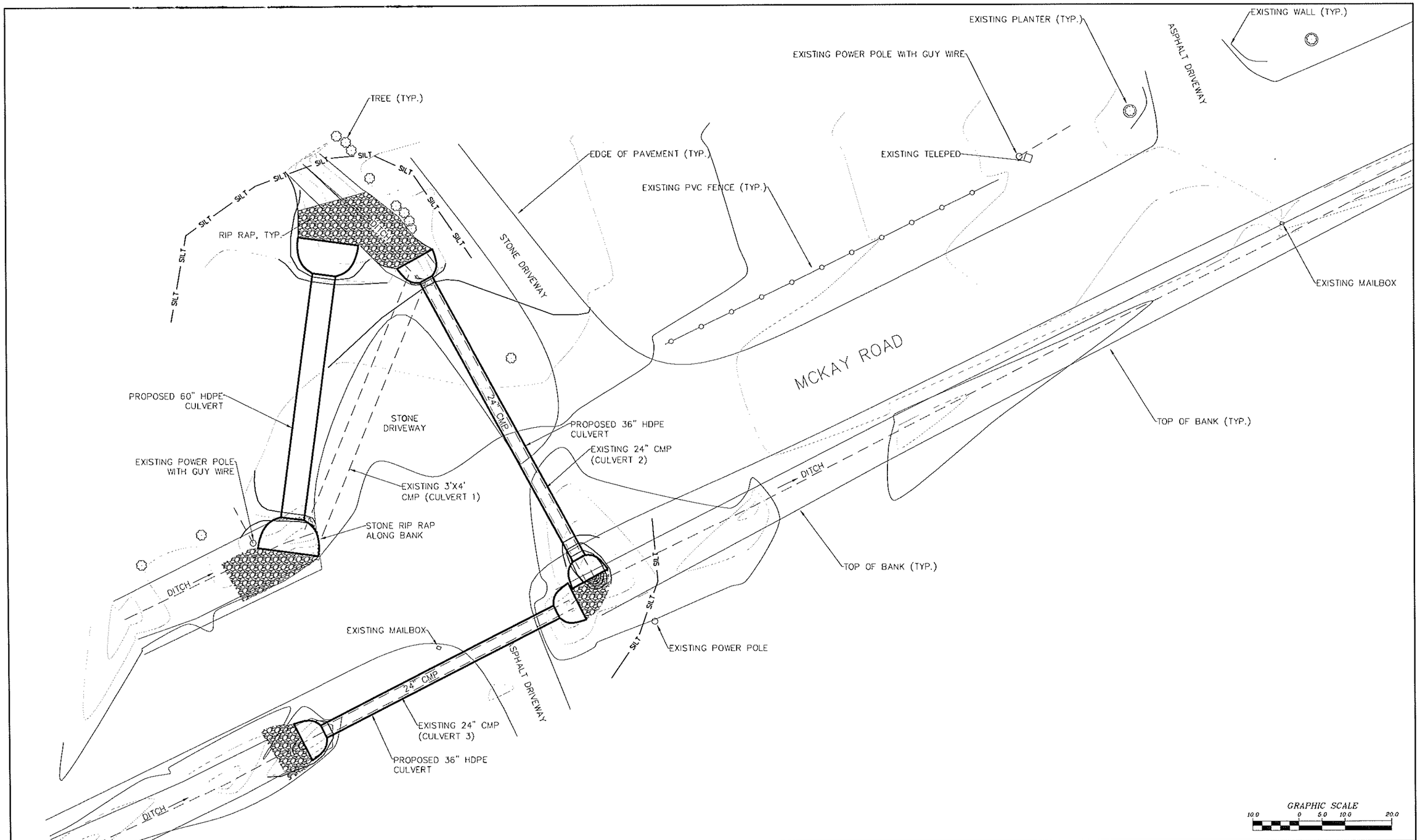

NO.	DATE	REVISION	BY
00	10/2016	ORIGINAL ISSUE	DPC

JME
John M. McDonald Engineering, P.C.
a member of PRIME Group®

New York Office
7 South Church Street Schenectady, New York 12305
Ph: 518 382 1774 Fax: 518 382 1776
www.mcdonaldengineers.com www.primeeng.com

PROJ. ENGR.: DPC | DRAWN BY: BSN | CHECKED BY: JMM

UNAUTHORIZED ALTERATIONS TO THIS DOCUMENT IS A VIOLATION OF SECTION 7209 SUBDIVISION 2 OF NEW YORK STATE EDUCATION LAW

MONTGOMERY COUNTY

CULVERT REPLACEMENT

CONTRACT NO. 3 - TOWN OF AMSTERDAM CULVERT REPLACEMENT
CONTRACT NO. 4 - TOWN OF FLORIDA CULVERT REPLACEMENT

SHEET TITLE:

MCKAY ROAD 1
SITE PLAN

SCALE: AS SHOWN

FILE NO.: 134-1601-100

DATE: OCTOBER 2016

SHEET NO.: A1

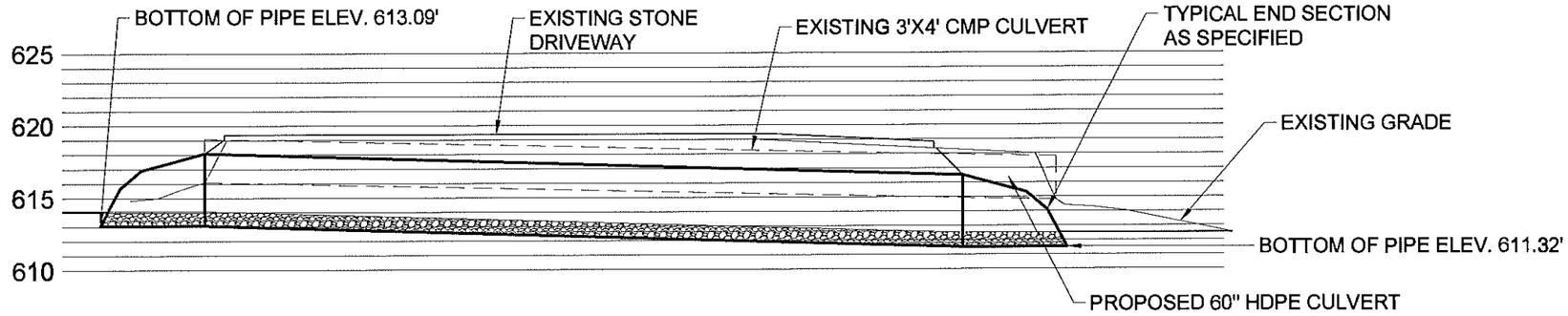

A / A2 MCKAY ROAD 1 CULVERT 1 PROFILE

GRAPHIC SCALE 5.0 0 2.5 5.0 10.0

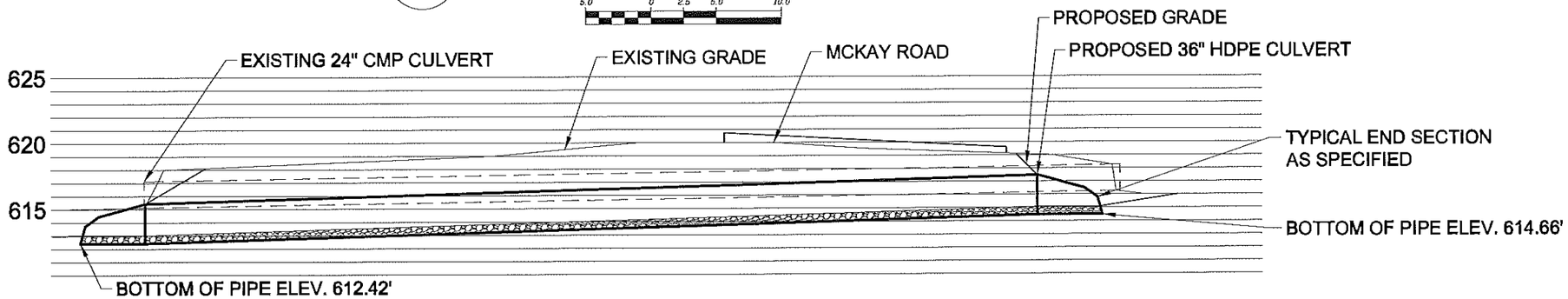

B / A2 MCKAY ROAD 1 CULVERT 2 PROFILE

GRAPHIC SCALE 5.0 0 2.5 5.0 10.0

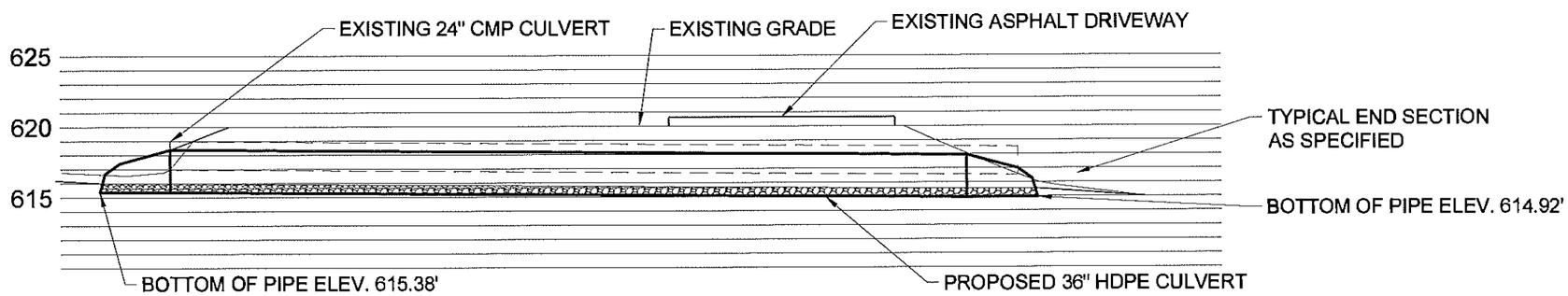

C / A2 MCKAY ROAD 1 CULVERT 3 PROFILE

GRAPHIC SCALE 5.0 0 2.5 5.0 10.0

NO.	DATE	REVISION	BY
00	10/2016	ORIGINAL ISSUE	DPC

JME
John M. McDonald Engineering, P.C.
a member of PRITER Group®
New York Office
7 South Church Street Schenectady, New York 12305
Ph: 518 382 1774 Fax: 518 382 1776
www.mcdonaldengineers.com www.priteeng.com
PROJ. ENGR.: DPC | DRAWN BY: BSN | CHECKED BY: JMM

UNAUTHORIZED ALTERATIONS TO THIS DOCUMENT IS A VIOLATION OF SECTION 7209 SUBDIVISION 2 OF NEW YORK STATE EDUCATION LAW

MONTGOMERY COUNTY

CULVERT REPLACEMENT

CONTRACT NO. 3 - TOWN OF AMSTERDAM CULVERT REPLACEMENT
CONTRACT NO. 4 - TOWN OF FLORIDA CULVERT REPLACEMENT

SHEET TITLE:

MCKAY ROAD 1 PROFILES

SCALE: AS SHOWN

FILE NO.: 134-1601-110

DATE: OCTOBER 2016

SHEET NO.: A2

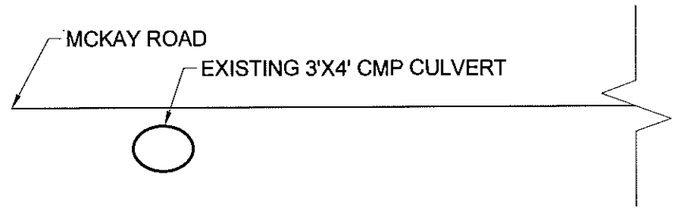

A / A3 EXISTING CULVERT 1 CROSS SECTION

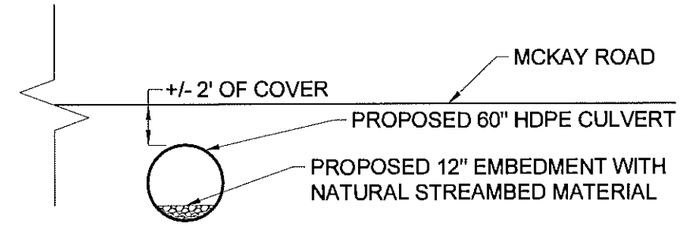

B / A3 PROPOSED CULVERT 1 CROSS SECTION

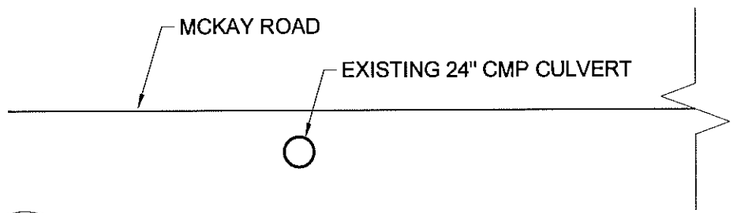

C / A3 EXISTING CULVERT 2 CROSS SECTION

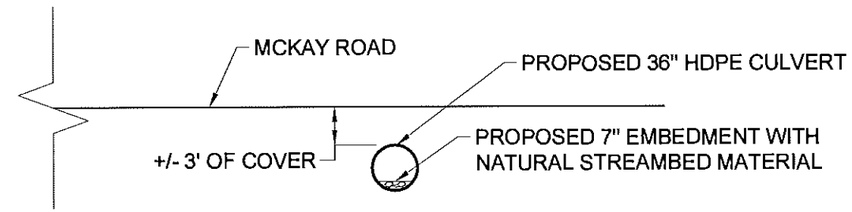

D / A3 PROPOSED CULVERT 2 CROSS SECTION

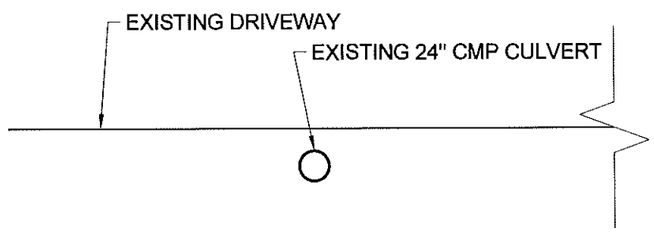

E / A3 EXISTING CULVERT 3 CROSS SECTION

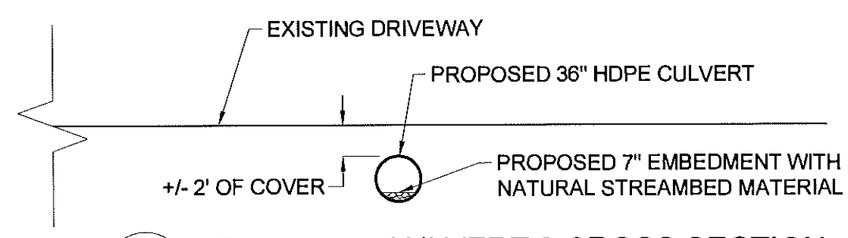

F / A3 PROPOSED CULVERT 3 CROSS SECTION

NO.	DATE	REVISION	BY
00	10/2016	ORIGINAL ISSUE	DPC

JME
John M. McDonald Engineering, P.C.
a member of PRIME Group®
New York Office
7 South Church Street Schenectady, New York 12305
Ph: 518 382 1774 Fax: 518 382 1776
www.mcdonaldengineers.com www.primeeng.com

PROJ. ENGR.: DPC | DRAWN BY: BSN | CHECKED BY: JMM

UNAUTHORIZED ALTERATIONS TO THIS DOCUMENT IS A VIOLATION OF SECTION 7209 SUBDIVISION 2 OF NEW YORK STATE EDUCATION LAW

MONTGOMERY COUNTY

CULVERT REPLACEMENT

CONTRACT NO. 3 - TOWN OF AMSTERDAM CULVERT REPLACEMENT
CONTRACT NO. 4 - TOWN OF FLORIDA CULVERT REPLACEMENT

SHEET TITLE:

MCKAY ROAD 1 CROSS SECTIONS

SCALE: AS SHOWN
FILE NO.: 134-1601
DATE: OCTOBER 2016
SHEET NO.: A3

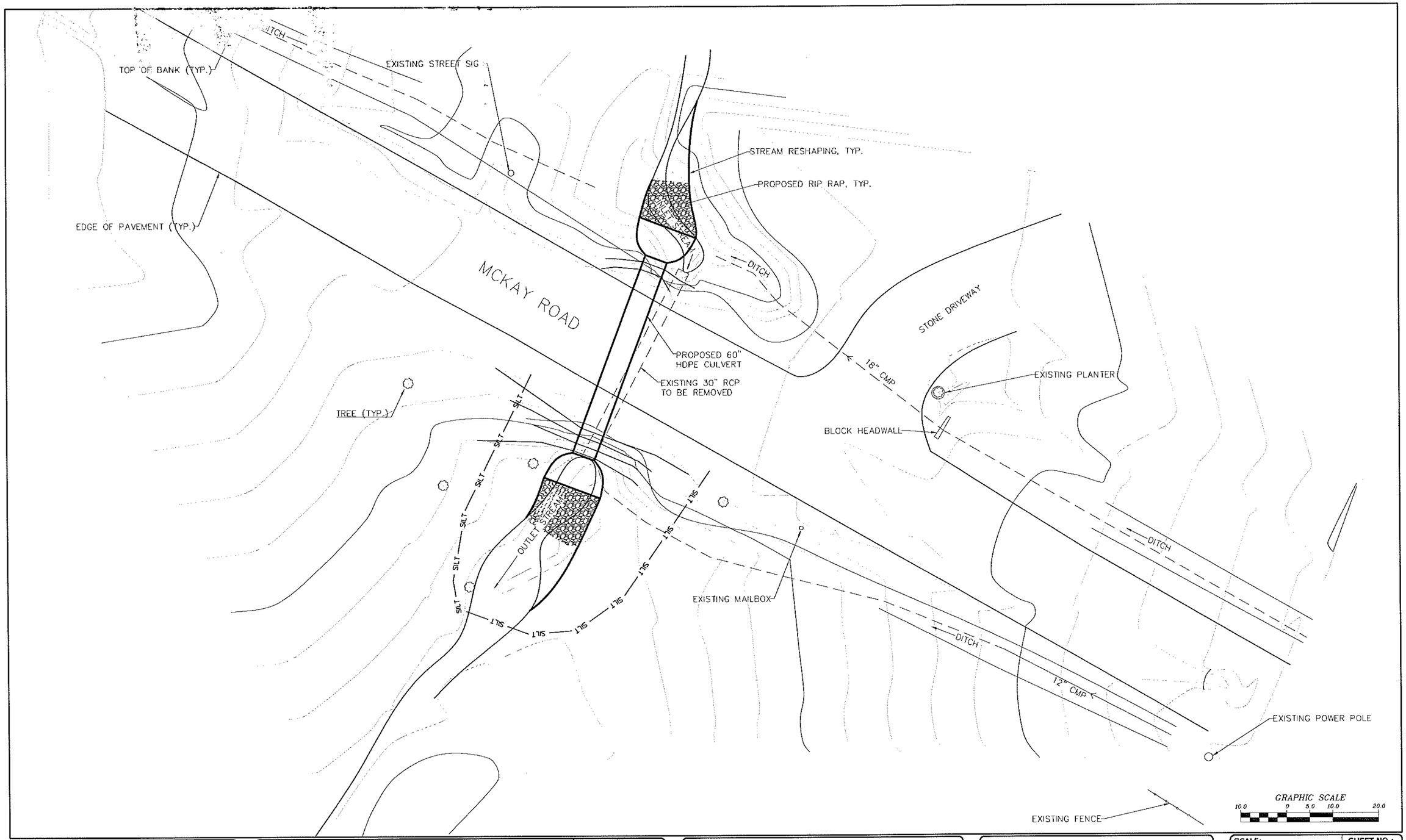

NO.	DATE	REVISION	BY
00	10/2016	ORIGINAL ISSUE	ATB

JME
John M. McDonald Engineering, P.C.
a member of PRIME Group
New York Office
7 South Church Street Schenectady, New York 12305
Ph: 518 382 1774 Fax: 518 382 1776
www.mcdonaldengineers.com www.primeeng.com

PROJ. ENGR.: ATB | DRAWN BY: BSN | CHECKED BY: JMM

LICENSED PROFESSIONAL ENGINEER JOHN M. McDONALD NO. 54566 STATE OF NEW YORK

UNAUTHORIZED ALTERATIONS TO THIS DOCUMENT IS A VIOLATION OF SECTION 7209 SUBDIVISION 2 OF NEW YORK STATE EDUCATION LAW

MONTGOMERY COUNTY

CULVERT REPLACEMENT

CONTRACT NO. 3 - TOWN OF AMSTERDAM CULVERT REPLACEMENT
CONTRACT NO. 4 - TOWN OF FLORIDA CULVERT REPLACEMENT

SHEET TITLE:

MCKAY ROAD 2
SITE PLAN

SCALE: AS SHOWN

FILE NO.: 134-1601-130

DATE: OCTOBER 2016

SHEET NO.: A4

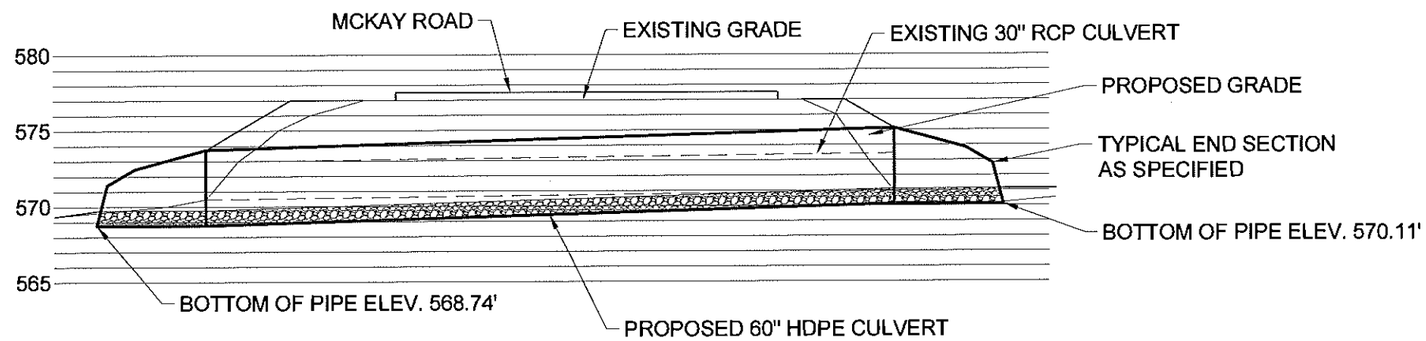

A
A5

MCKAY ROAD 2 PROFILE

GRAPHIC SCALE
5.0 0 2.5 5.0 10.0

NO.	DATE	REVISION	BY
00	10/2016	ORIGINAL ISSUE	ATB

JME
John M. McDonald Engineering, P.C.
a member of PRIME Group®
New York Office
7 South Church Street Schenectady, New York 12305
Ph: 518 382 1774 Fax: 518 382 1776
www.mcdonaldengineers.com www.primeeng.com

PROJ. ENGR.: ATB | DRAWN BY: BSN | CHECKED BY: JMM

UNAUTHORIZED ALTERATIONS TO THIS DOCUMENT IS A VIOLATION OF SECTION 7209 SUBDIVISION 2 OF NEW YORK STATE EDUCATION LAW

MONTGOMERY COUNTY

CULVERT REPLACEMENT

CONTRACT NO. 3 - TOWN OF AMSTERDAM CULVERT REPLACEMENT
CONTRACT NO. 4 - TOWN OF FLORIDA CULVERT REPLACEMENT

SHEET TITLE:
MCKAY ROAD PROFILE

SCALE: AS SHOWN
FILE NO.: 134-1601-140
DATE: OCTOBER 2016
SHEET NO.: A5

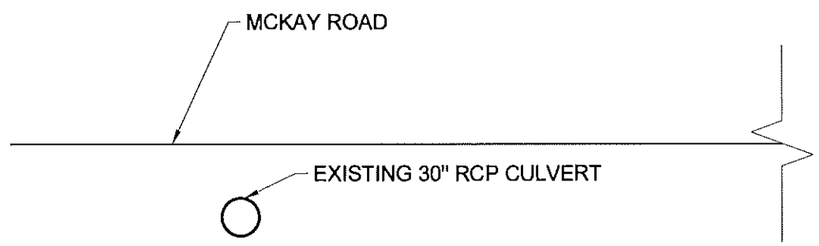

A / A6 EXISTING CROSS SECTION

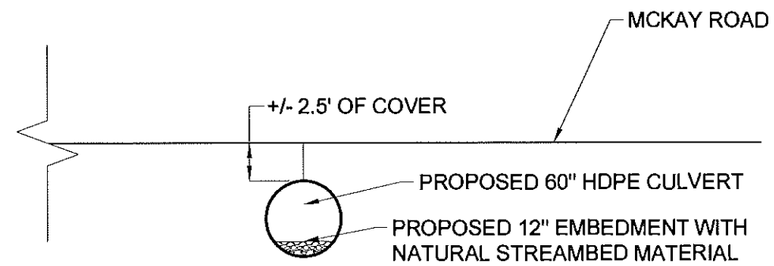

B / A6 PROPOSED CROSS SECTION

NO.	DATE	REVISION	BY
00	10/2016	ORIGINAL ISSUE	ATB

JME
John M. McDonald Engineering, P.C.
a member of PRIME Group
New York Office
7 South Church Street Schenectady, New York 12305
Ph: 518 382 1774 Fax: 518 382 1776
www.mcdonaldengineers.com www.primeeng.com

PROJ. ENGR.: ATB | DRAWN BY: BSN | CHECKED BY: JMM

UNAUTHORIZED ALTERATIONS TO THIS DOCUMENT IS A VIOLATION OF SECTION 7209 SUBDIVISION 2 OF NEW YORK STATE EDUCATION LAW

MONTGOMERY COUNTY

CULVERT REPLACEMENT

CONTRACT NO. 3 - TOWN OF AMSTERDAM CULVERT REPLACEMENT
CONTRACT NO. 4 - TOWN OF FLORIDA CULVERT REPLACEMENT

SHEET TITLE:

MCKAY ROAD CROSS SECTIONS

SCALE: AS SHOWN
FILE NO.: 134-1601-150
DATE: OCTOBER 2016
SHEET NO.: A6

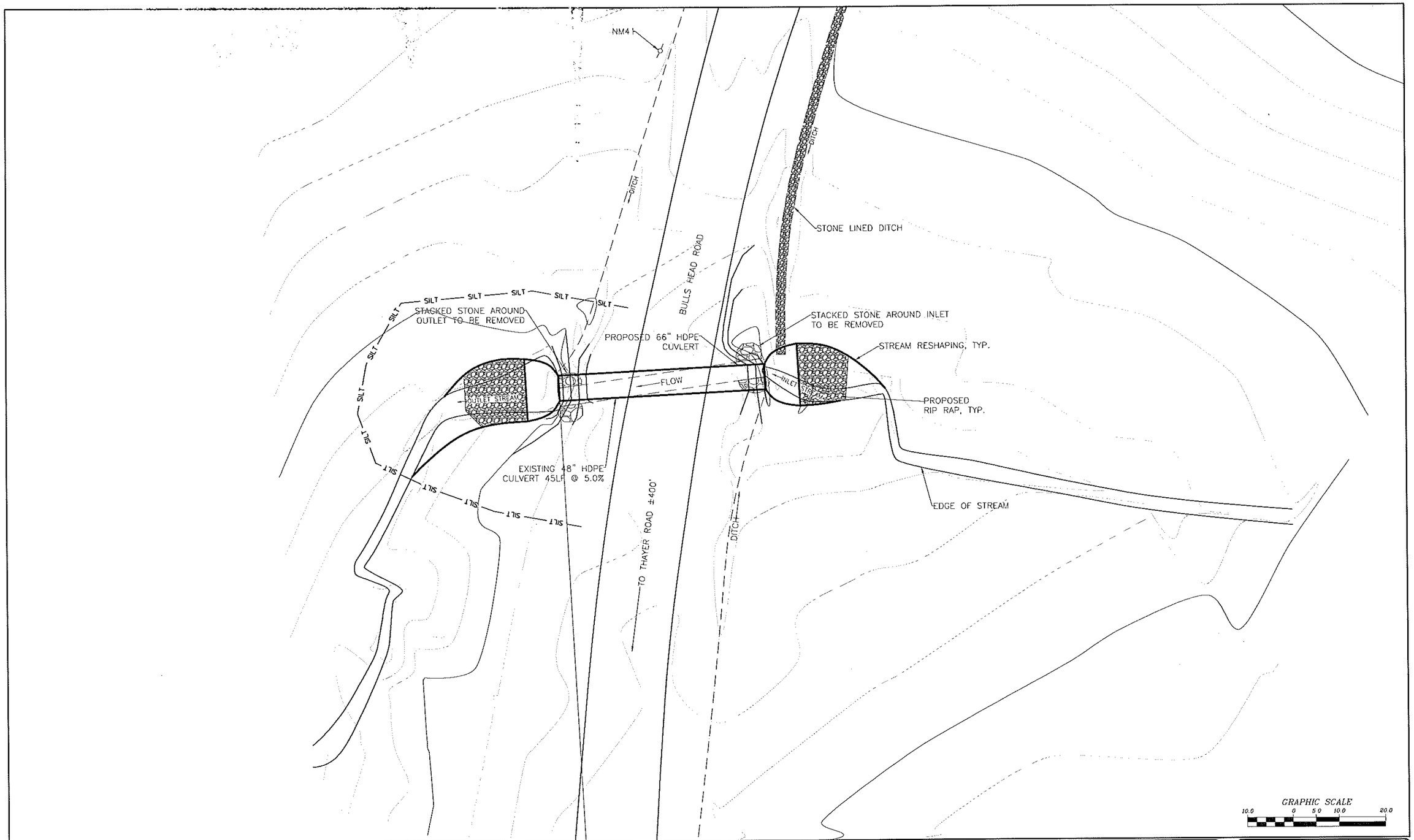

NO.	DATE	REVISION	BY
00	10/2016	ORIGINAL ISSUE	ATB

JME
John M. McDonald Engineering
a member of PRIME Group

New York Office
7 South Church Street Schenectady, New York 12305
Ph: 518 382 1774 Fax: 518 382 1776
www.mcdonaldengineers.com www.primeeng.com

PROJ. ENGR.: ATB | DRAWN BY: BSN | CHECKED BY: JMM

LICENSED PROFESSIONAL ENGINEER JOHN M. McDONALD NO. 54558 STATE OF NEW YORK

UNAUTHORIZED ALTERATIONS TO THIS DOCUMENT IS A VIOLATION OF SECTION 7209 SUBDIVISION 2 OF NEW YORK STATE EDUCATION LAW

MONTGOMERY COUNTY

CULVERT REPLACEMENT

CONTRACT NO. 3 - TOWN OF AMSTERDAM CULVERT REPLACEMENT
CONTRACT NO. 4 - TOWN OF FLORIDA CULVERT REPLACEMENT

SHEET TITLE:

BULLSHEAD ROAD
SITE PLAN

SCALE: AS SHOWN
FILE NO.: 134-1601-200
DATE: OCTOBER 2016
SHEET NO.: B1

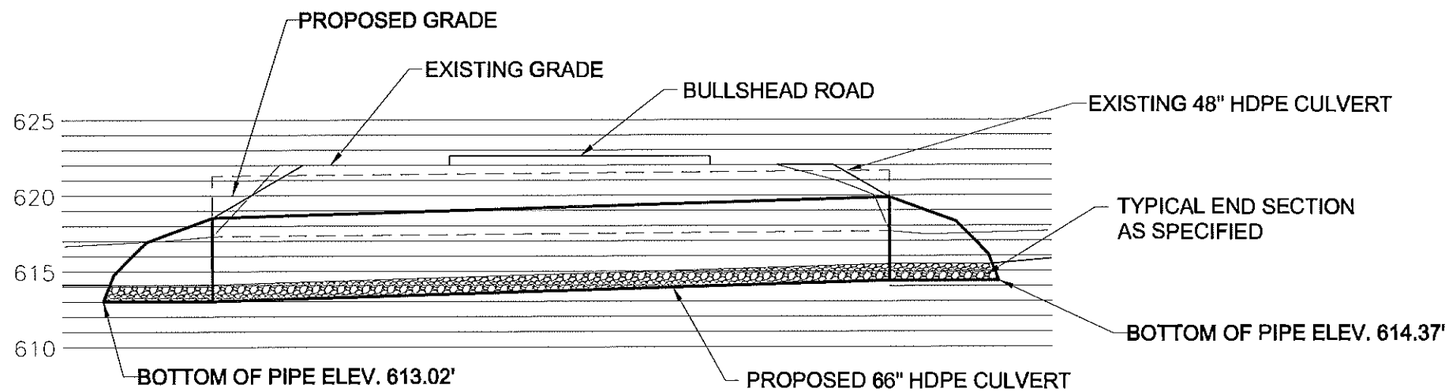

A
B2

BULLSHEAD ROAD PROFILE

GRAPHIC SCALE
5.0 0 2.5 5.0 10.0

NO.	DATE	REVISION	BY
00	10/2016	ORIGINAL ISSUE	ATB

JME
John M. McDonald Engineering
a member of PRIME Group®

New York Office
7 South Church Street Schenectady, New York 12305
Ph: 518 382 1774 Fax: 518 382 1776
www.mcdonaldengineers.com www.primeeng.com

PROJ. ENGR.: ATB | DRAWN BY: BSN | CHECKED BY: JMM

JOHN M. MCDONALD LICENSED PROFESSIONAL ENGINEER NO. 54506 STATE OF NEW YORK

UNAUTHORIZED ALTERATIONS TO THIS DOCUMENT IS A VIOLATION OF SECTION 7209 SUBDIVISION 2 OF NEW YORK STATE EDUCATION LAW

MONTGOMERY COUNTY

CULVERT REPLACEMENT

CONTRACT NO. 3 - TOWN OF AMSTERDAM CULVERT REPLACEMENT
CONTRACT NO. 4 - TOWN OF FLORIDA CULVERT REPLACEMENT

SHEET TITLE:
BULLSHEAD ROAD PROFILE

SCALE: AS SHOWN
FILE NO.: 134-1601-203
DATE: OCTOBER 2016
SHEET NO.: B2

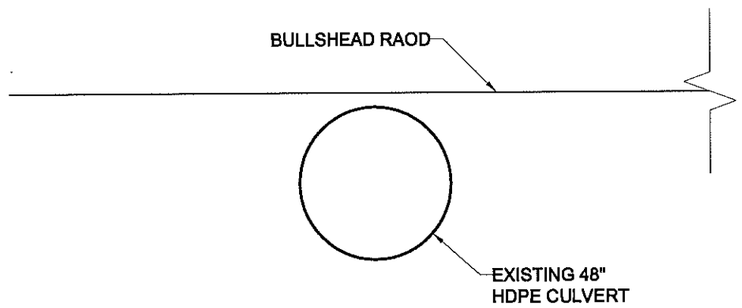

A
B3
EXISTING CROSS SECTION

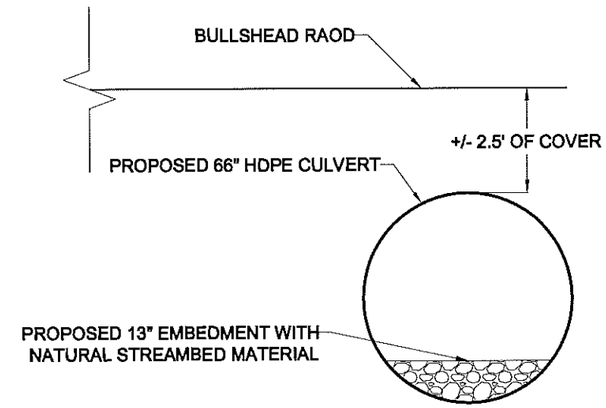

B
B3
PROPOSED CROSS SECTION

NO.	DATE	REVISION	BY
00	10/2016	ORIGINAL ISSUE	ATB

JME
John M. McDonald Engineering
a member of PRIME Group®
New York Office
7 South Church Street Schenectady, New York 12305
Ph: 518 382 1774 Fax: 518 382 1776
www.mcdonaldengineers.com www.primeeng.com

PROJ. ENGR.: ATB | DRAWN BY: BSN | CHECKED BY: JMM

UNAUTHORIZED ALTERATIONS TO THIS DOCUMENT IS A VIOLATION OF SECTION 7209 SUBDIVISION 2 OF NEW YORK STATE EDUCATION LAW

MONTGOMERY COUNTY

CULVERT REPLACEMENT

CONTRACT NO. 3 - TOWN OF AMSTERDAM CULVERT REPLACEMENT
CONTRACT NO. 4 - TOWN OF FLORIDA CULVERT REPLACEMENT

SHEET TITLE:

BULLSHEAD ROAD
CROSS SECTIONS

SCALE: AS SHOWN
FILE NO.: 134-1601-206
DATE: OCTOBER 2016
SHEET NO.: B3

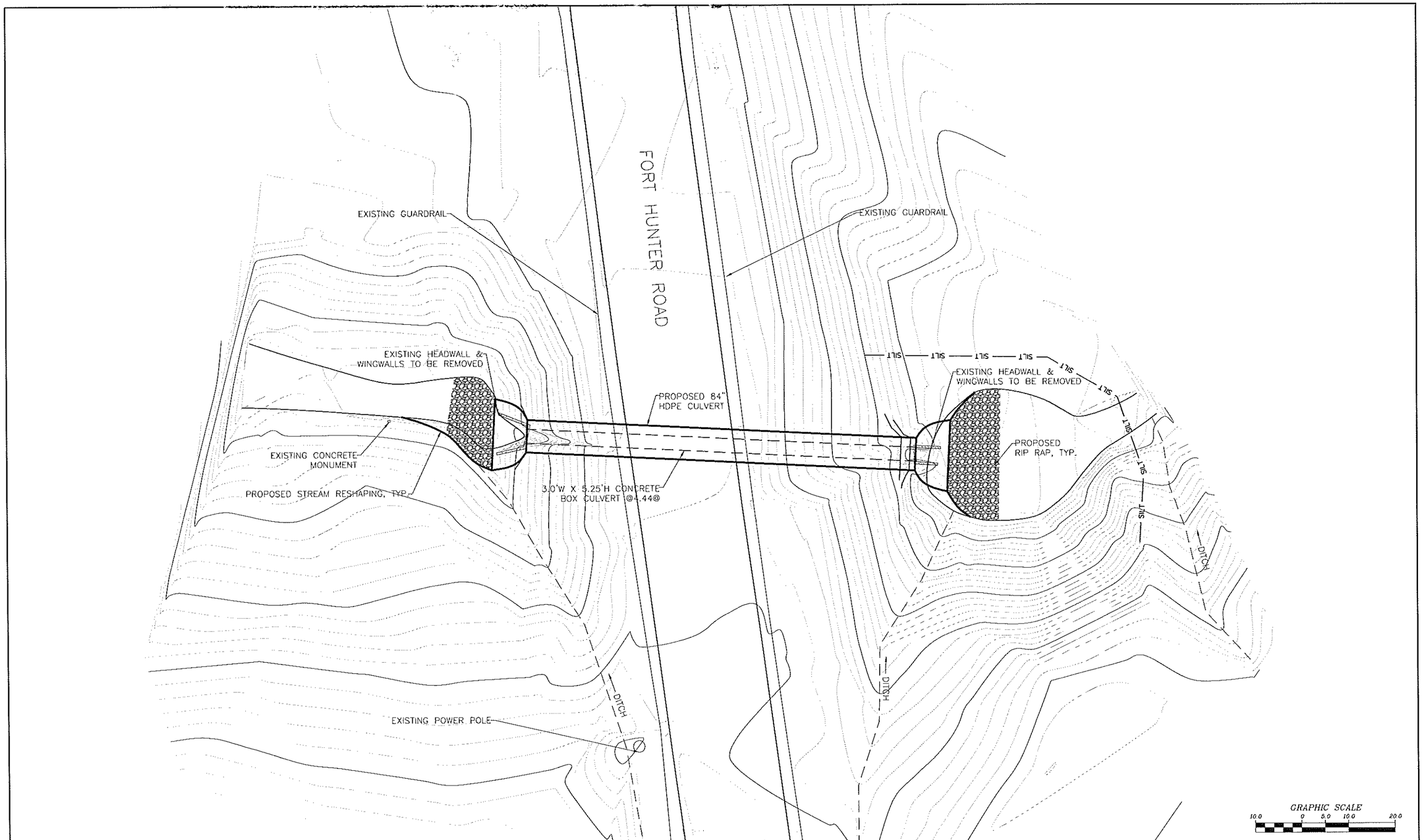

NO.	DATE	REVISION	BY
00	10/2016	ORIGINAL ISSUE	ATB

JME
John M. McDonald Engineering
a member of PRIME Group

New York Office
7 South Church Street Schenectady, New York 12305
Ph: 518 382 1774 Fax: 518 382 1776
www.mcdonaldengineers.com www.primeeng.com

PROJ. ENGR.: ATB | DRAWN BY: BSN | CHECKED BY: JMM

JOHN M. McDONALD LICENSED PROFESSIONAL ENGINEER NO. 54500 STATE OF NEW YORK

UNAUTHORIZED ALTERATIONS TO THIS DOCUMENT IS A VIOLATION OF SECTION 7209 SUBDIVISION 2 OF NEW YORK STATE EDUCATION LAW

MONTGOMERY COUNTY

CULVERT REPLACEMENT

CONTRACT NO. 3 - TOWN OF AMSTERDAM CULVERT REPLACEMENT
CONTRACT NO. 4 - TOWN OF FLORIDA CULVERT REPLACEMENT

SHEET TITLE:

FORT HUNTER ROAD
SITE PLAN

SCALE: AS SHOWN

FILE NO.: 134-1601-210

DATE: OCTOBER 2016

SHEET NO.: B4

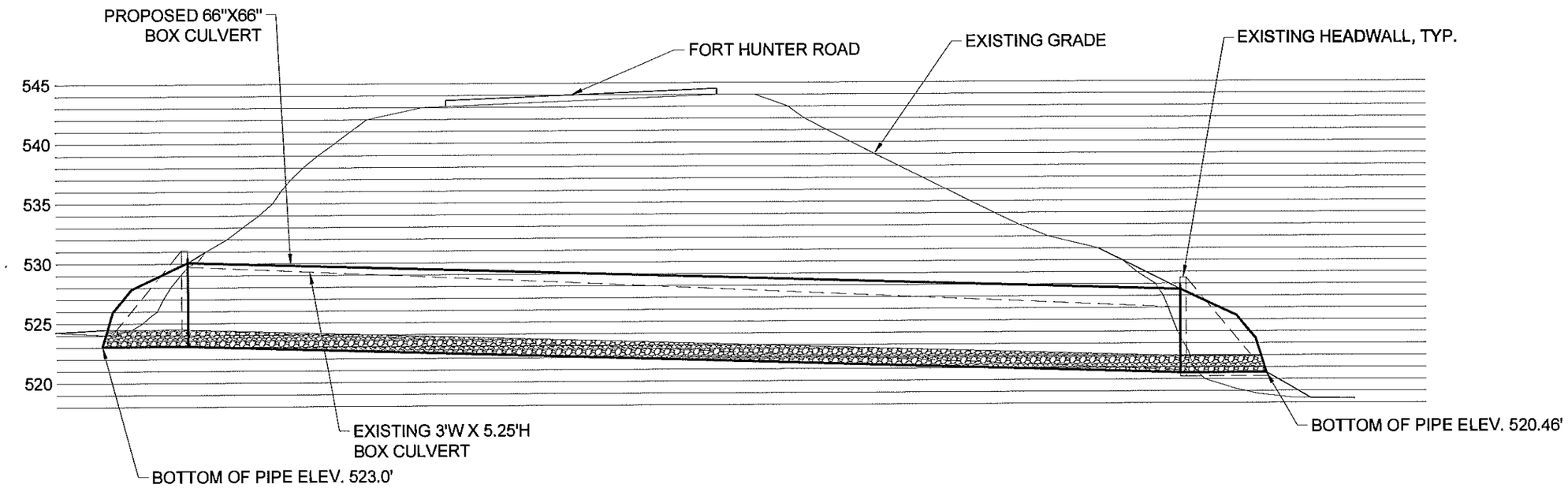

A
B5

FORT HUNTER ROAD PROFILE

GRAPHIC SCALE
5.0 0 2.5 5.0 10.0

NO.	DATE	REVISION	BY
00	10/2016	ORIGINAL ISSUE	ATB

JME
John M. McDonald Engineering
a member of PRITCHEE Group®

New York Office
7 South Church Street Schenectady, New York 12305
Ph: 518 382 1774 Fax: 518 382 1776
www.mcdonaldengineers.com www.primeeng.com

PROJ. ENGR.: ATB | DRAWN BY: BSN | CHECKED BY: JMM

LICENSED PROFESSIONAL ENGINEER JOHN M. McDONALD NO. 54568 STATE OF NEW YORK

UNAUTHORIZED ALTERATIONS TO THIS DOCUMENT IS A VIOLATION OF SECTION 7209 SUBDIVISION 2 OF NEW YORK STATE EDUCATION LAW

MONTGOMERY COUNTY

CULVERT REPLACEMENT

CONTRACT NO. 3 - TOWN OF AMSTERDAM CULVERT REPLACEMENT
CONTRACT NO. 4 - TOWN OF FLORIDA CULVERT REPLACEMENT

SHEET TITLE:
FORT HUNTER ROAD PROFILE

SCALE: AS SHOWN
FILE NO.: 134-1601-213
DATE: OCTOBER 2016
SHEET NO.: B5

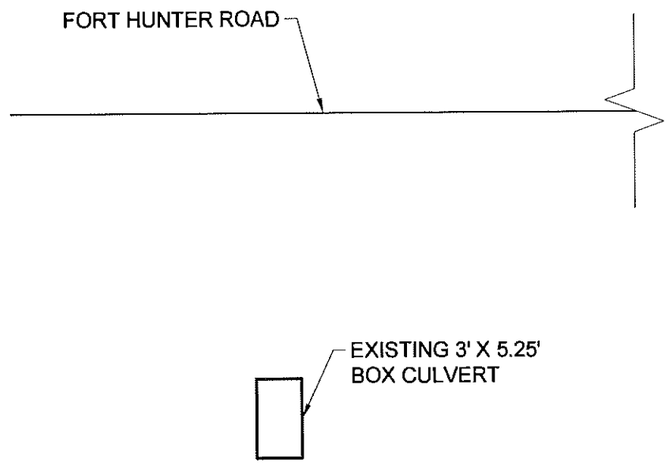

A
B6
EXISTING CROSS SECTION

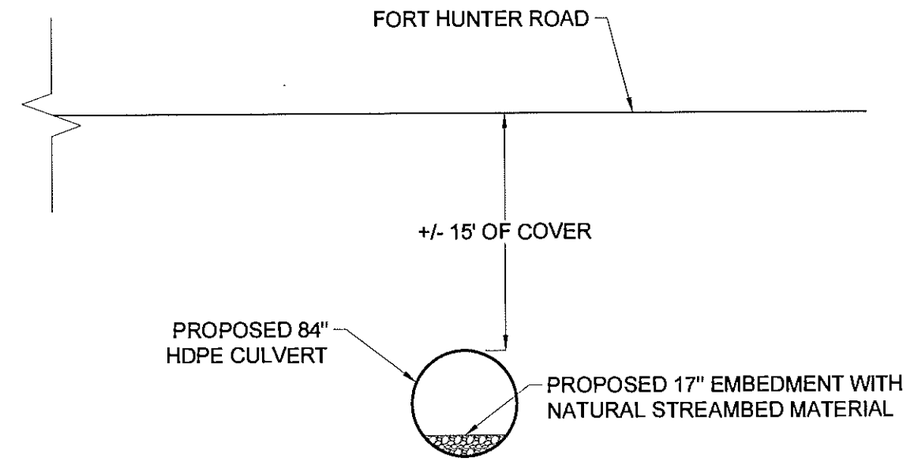

B
B6
PROPOSED CROSS SECTION

NO.	DATE	REVISION	BY
00	10/2016	ORIGINAL ISSUE	ATB

JME
John M. McDonald Engineering
a member of PRIME Group®
New York Office
7 South Church Street Schenectady, New York 12305
Ph: 518 382 1774 Fax: 518 382 1776
www.mcdonaldengineers.com www.primeeng.com

PROJ. ENGR.: ATB | DRAWN BY: BSN | CHECKED BY: JMM

JOHN M. McDONALD PROFESSIONAL ENGINEER STATE OF NEW YORK NO. 54500

UNAUTHORIZED ALTERATIONS TO THIS DOCUMENT IS A VIOLATION OF SECTION 7209 SUBDIVISION 2 OF NEW YORK STATE EDUCATION LAW

MONTGOMERY COUNTY

CULVERT REPLACEMENT

CONTRACT NO. 3 - TOWN OF AMSTERDAM CULVERT REPLACEMENT
CONTRACT NO. 4 - TOWN OF FLORIDA CULVERT REPLACEMENT

SHEET TITLE:

FORT HUNTER ROAD
CROSS SECTIONS

SCALE: AS SHOWN
FILE NO.: 134-1601-216
DATE: OCTOBER 2016
SHEET NO.: B6

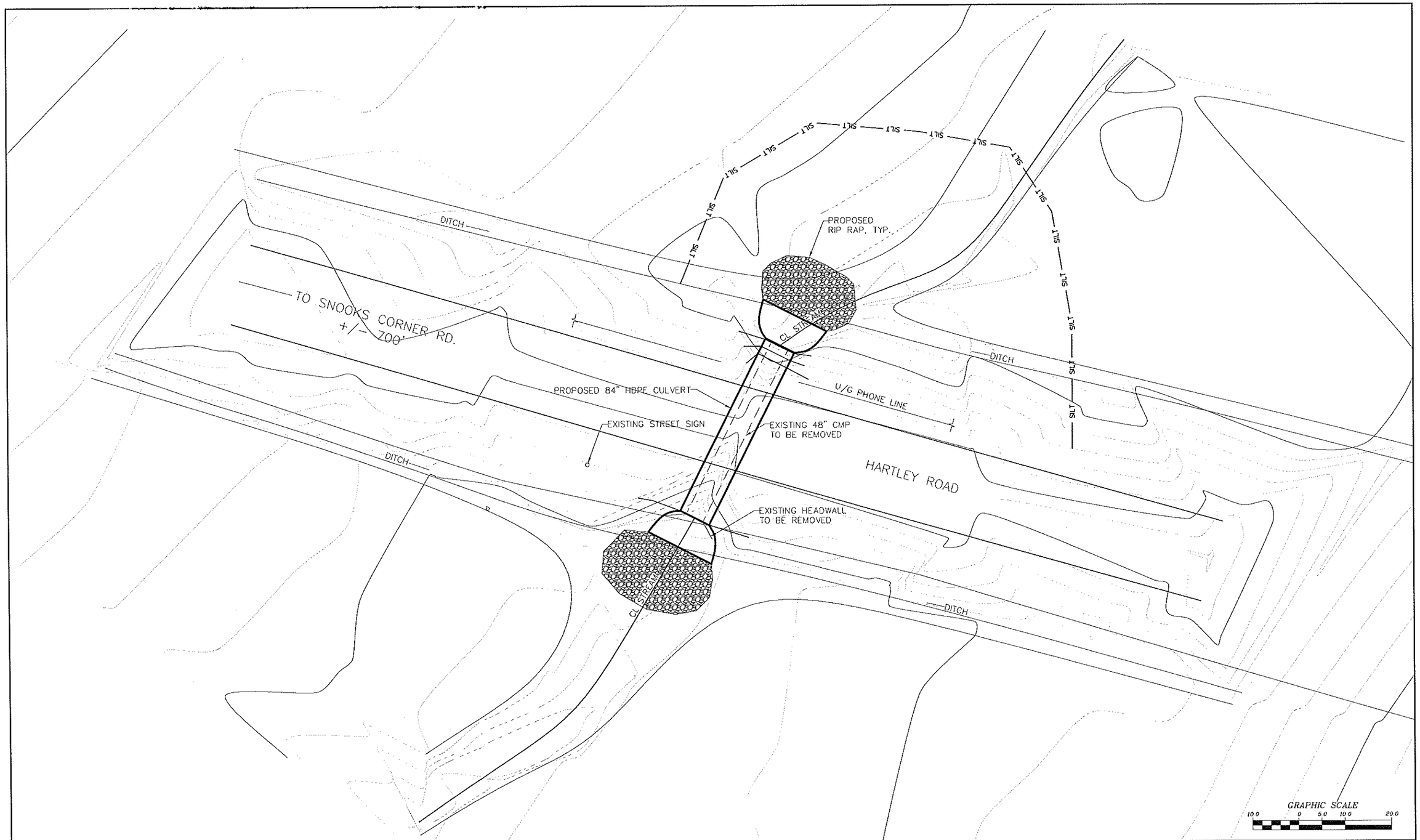

NO.	DATE	REVISION	BY
00	10/2016	ORIGINAL ISSUE	ATB

JME
John M. McDonald Engineering, P.C.
a member of PRIME Group

New York Office
7 South Church Street Schenectady, New York 12305
Ph: 518 382 1774 Fax: 518 382 1776
www.mcdonaldengineers.com www.primeeng.com

PROJ. ENGR.: ATB | DRAWN BY: BSN | CHECKED BY: JMM

LICENSED PROFESSIONAL ENGINEER JOHN M. MCDONALD NO. 54558 STATE OF NEW YORK

UNAUTHORIZED ALTERATIONS TO THIS DOCUMENT IS A VIOLATION OF SECTION 7209 SUBDIVISION 2 OF NEW YORK STATE EDUCATION LAW

MONTGOMERY COUNTY

CULVERT REPLACEMENT

CONTRACT NO. 3 - TOWN OF AMSTERDAM CULVERT REPLACEMENT
CONTRACT NO. 4 - TOWN OF FLORIDA CULVERT REPLACEMENT

SHEET TITLE:

HARTLEY ROAD
SITE PLAN

SCALE: AS SHOWN
FILE NO.: 134-1601-220
DATE: OCTOBER 2016
SHEET NO.: B7

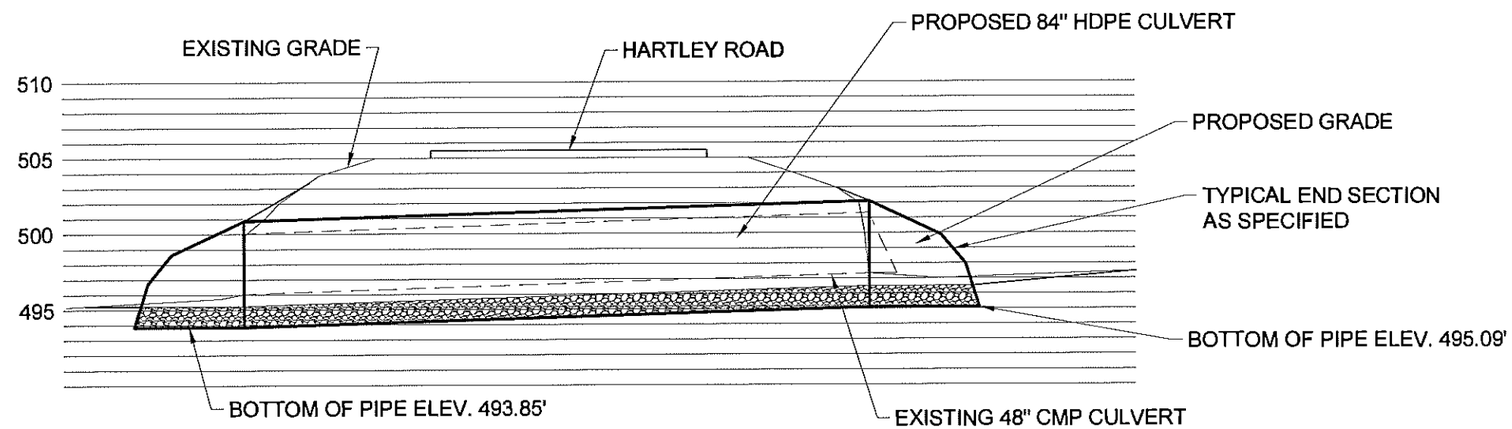

A
B8

HARTLEY ROAD PROFILE

GRAPHIC SCALE
5.0 0 2.5 5.0 10.0

NO.	DATE	REVISION	BY
00	10/2016	ORIGINAL ISSUE	ATB

JME
John M. McDonald Engineering, P.C.
a member of PRIME Group®
New York Office
7 South Church Street Schenectady, New York 12305
Ph: 518 382 1774 Fax: 518 382 1776
www.mcdonaldengineers.com www.primeeng.com

PROJ. ENGR.: ATB | DRAWN BY: BSN | CHECKED BY: JMM

UNAUTHORIZED ALTERATIONS TO THIS DOCUMENT IS A VIOLATION OF SECTION 7209 SUBDIVISION 2 OF NEW YORK STATE EDUCATION LAW

MONTGOMERY COUNTY

CULVERT REPLACEMENT

CONTRACT NO. 3 - TOWN OF AMSTERDAM CULVERT REPLACEMENT
CONTRACT NO. 4 - TOWN OF FLORIDA CULVERT REPLACEMENT

SHEET TITLE:
HARTLEY ROAD PROFILE

SCALE: AS SHOWN
FILE NO.: 134-1601-223
DATE: OCTOBER 2016
SHEET NO.: B8

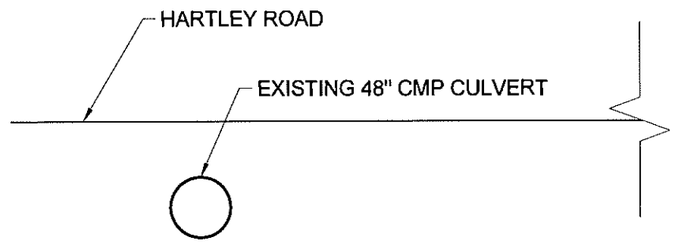

A / B9 EXISTING CROSS SECTION

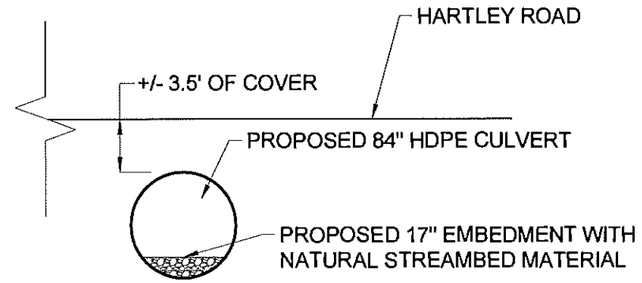

B / B9 PROPOSED CROSS SECTION

NO.	DATE	REVISION	BY
00	10/2016	ORIGINAL ISSUE	ATB

JME
John M. McDonald Engineering, P.C.
a member of PRIME Group®

New York Office
7 South Church Street Schenectady, New York 12305
Ph: 518 382 1774 Fax: 518 382 1776
www.mcdonaldengineers.com www.primeeng.com

PROJ. ENGR.: ATB | DRAWN BY: BSN | CHECKED BY: JMM

UNAUTHORIZED ALTERATIONS TO THIS DOCUMENT IS A VIOLATION OF SECTION 7209 SUBDIVISION 2 OF NEW YORK STATE EDUCATION LAW

MONTGOMERY COUNTY

CULVERT REPLACEMENT

CONTRACT NO. 3 - TOWN OF AMSTERDAM CULVERT REPLACEMENT
CONTRACT NO. 4 - TOWN OF FLORIDA CULVERT REPLACEMENT

SHEET TITLE:

HARTLEY ROAD CROSS SECTIONS

SCALE: AS SHOWN

FILE NO.: 134-1601-226

DATE: OCTOBER 2016

SHEET NO.: B9

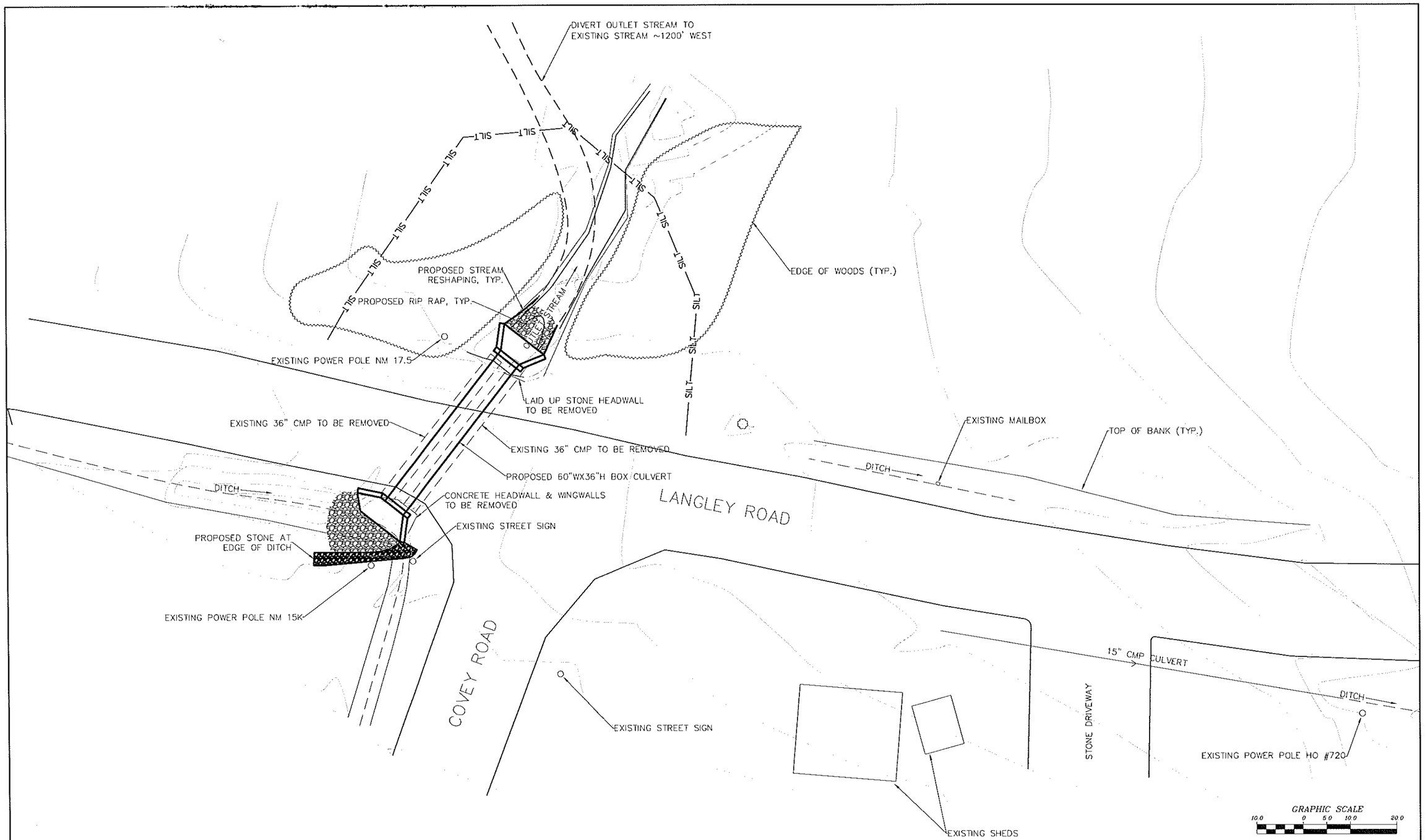

NO.	DATE	REVISION	BY
00	10/2016	ORIGINAL ISSUE	ATB

JME
John M. McDonald Engineering, P.C.
a member of PRIME Group®

New York Office
7 South Church Street Schenectady, New York 12305
Ph: 518 382 1774 Fax: 518 382 1776
www.mcdonaldengineers.com www.primeeng.com

PROJ. ENGR.: ATB | DRAWN BY: BSN | CHECKED BY: JMM

LICENSED PROFESSIONAL ENGINEER JOHN M. McDONALD NO. 54558 STATE OF NEW YORK

UNAUTHORIZED ALTERATIONS TO THIS DOCUMENT IS A VIOLATION OF SECTION 7209 SUBDIVISION 2 OF NEW YORK STATE EDUCATION LAW

MONTGOMERY COUNTY

CULVERT REPLACEMENT

CONTRACT NO. 3 - TOWN OF AMSTERDAM CULVERT REPLACEMENT
CONTRACT NO. 4 - TOWN OF FLORIDA CULVERT REPLACEMENT

SHEET TITLE:

LANGLEY ROAD
SITE PLAN

SCALE: AS SHOWN

FILE NO.: 134-1601-230

DATE: OCTOBER 2016

SHEET NO.: B10

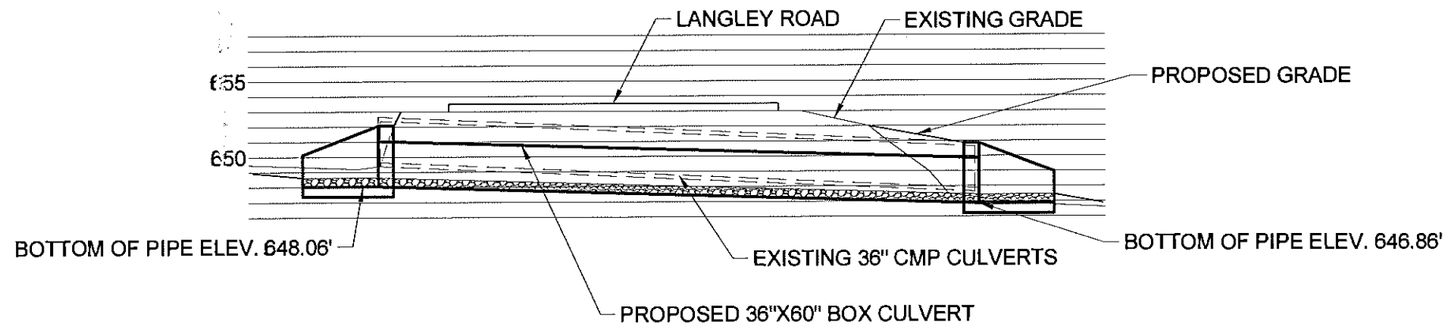

A / B11 LANGLEY ROAD PROFILE

GRAPHIC SCALE
5.0 0 2.5 5.0 10.0

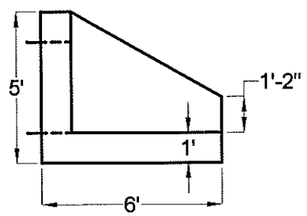

B / B11 HEADWALL ELEVATION

DO NOT SCALE

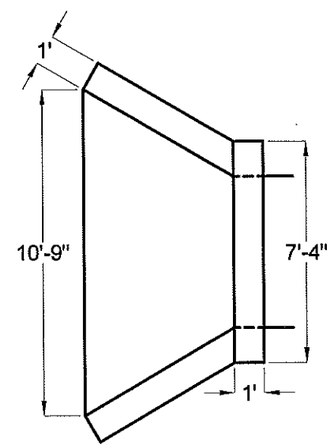

C / B11 OUTLET HEADWALL PLAN

DO NOT SCALE

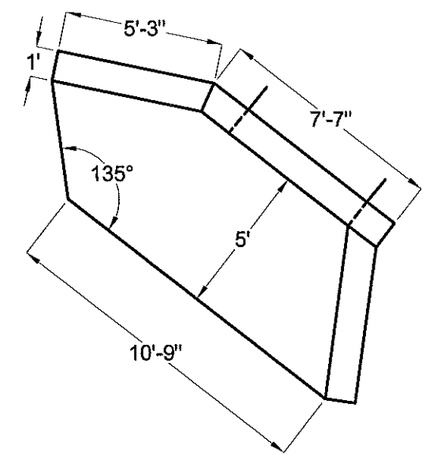

D / B11 INLET HEADWALL PLAN

DO NOT SCALE

NO.	DATE	REVISION	BY
00	10/2016	ORIGINAL ISSUE	ATB

JME
John M. McDonald Engineering, P.C.
a member of PRIME Group®
New York Office
7 South Church Street Schenectady, New York 12305
Ph: 518 382 1774 Fax: 518 382 1776
www.mcdonaldenglineers.com www.primeeng.com

PROJ. ENGR.: ATB | DRAWN BY: BSN | CHECKED BY: JMM

JOHN M. MCDONALD PROFESSIONAL ENGINEER NO. 54505 STATE OF NEW YORK

UNAUTHORIZED ALTERATIONS TO THIS DOCUMENT IS A VIOLATION OF SECTION 7209 SUBDIVISION 2 OF NEW YORK STATE EDUCATION LAW

MONTGOMERY COUNTY

CULVERT REPLACEMENT

CONTRACT NO. 3 - TOWN OF AMSTERDAM CULVERT REPLACEMENT
CONTRACT NO. 4 - TOWN OF FLORIDA CULVERT REPLACEMENT

SHEET TITLE: LANGLEY ROAD PROFILE

SCALE: AS SHOWN
FILE NO.: 134-1601-233
DATE: OCTOBER 2016
SHEET NO.: B11

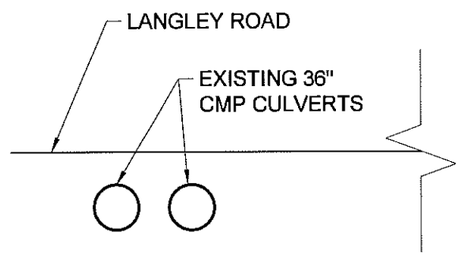

A
B12
EXISTING CROSS SECTION

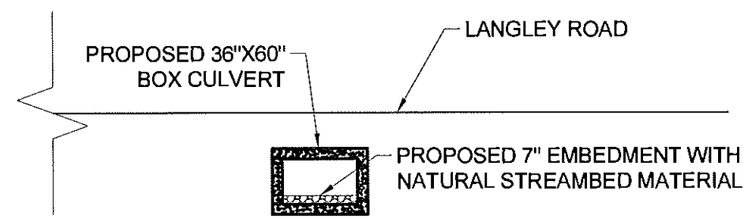

B
B12
PROPOSED CROSS SECTION

NO.	DATE	REVISION	BY
00	10/2016	ORIGINAL ISSUE	ATB

JME
John M. McDonald Engineering, P.C.
a member of PRIME Group®
New York Office
7 South Church Street Schenectady, New York 12305
Ph: 518 382 1774 Fax: 518 382 1776
www.mcdonaldengineers.com www.primeeng.com

PROJ. ENGR.: ATB | DRAWN BY: BSN | CHECKED BY: JMM

JOHN M. MCDONALD PROFESSIONAL ENGINEER NO. 54506 STATE OF NEW YORK

UNAUTHORIZED ALTERATIONS TO THIS DOCUMENT IS A VIOLATION OF SECTION 7209 SUBDIVISION 2 OF NEW YORK STATE EDUCATION LAW

MONTGOMERY COUNTY

CULVERT REPLACEMENT

CONTRACT NO. 3 - TOWN OF AMSTEROAM CULVERT REPLACEMENT
CONTRACT NO. 4 - TOWN OF FLORIDA CULVERT REPLACEMENT

SHEET TITLE:

LANGLEY ROAD CROSS SECTIONS

SCALE: AS SHOWN
FILE NO.: 134-1601-236
DATE: OCTOBER 2016
SHEET NO.: B12

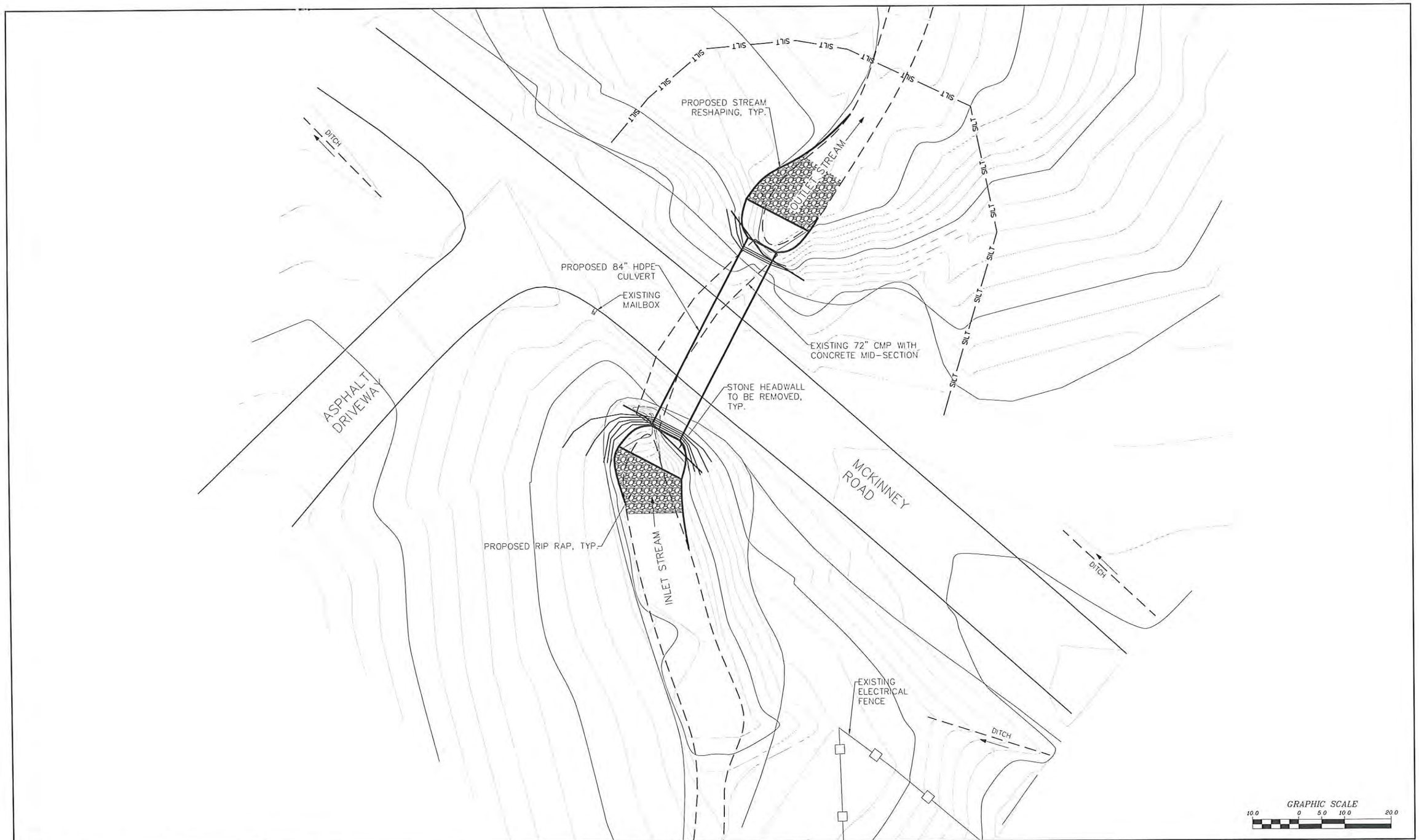

NO.	DATE	REVISION	BY
00	10/2016	ORIGINAL ISSUE	ATB

JME
John M. McDonald Engineering
a member of PRIME Group

New York Office
7 South Church Street Schenectady, New York 12305
Ph: 518 382 1774 Fax: 518 382 1776
www.mcdonaldengineers.com www.primeeng.com

PROJ. ENGR.: ATB | DRAWN BY: BSN | CHECKED BY: JMM

JOHN M. MCDONALD PROFESSIONAL ENGINEER NO. 54505 STATE OF NEW YORK

UNAUTHORIZED ALTERATIONS TO THIS DOCUMENT IS A VIOLATION OF SECTION 7209 SUBDIVISION 2 OF NEW YORK STATE EDUCATION LAW

MONTGOMERY COUNTY

CULVERT REPLACEMENT

CONTRACT NO. 3 - TOWN OF AMSTERDAM CULVERT REPLACEMENT
CONTRACT NO. 4 - TOWN OF FLORIDA CULVERT REPLACEMENT

SHEET TITLE:

MCKINNEY ROAD 4A
SITE PLAN

SCALE: AS SHOWN

FILE NO.: 134-1601-240

DATE: OCTOBER 2016

SHEET NO.: B13

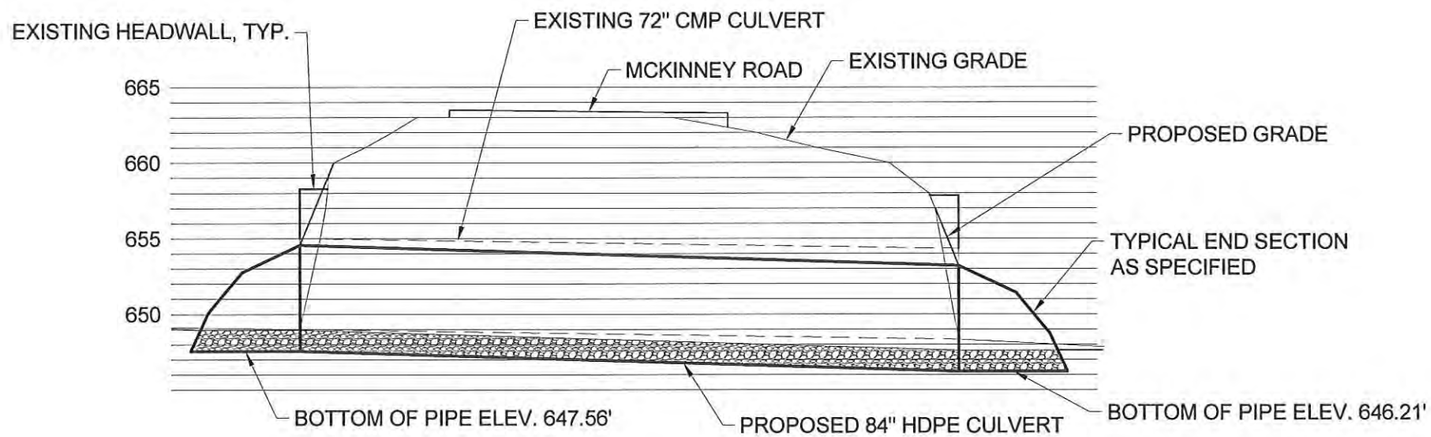

A
B14

MCKINNEY ROAD 4A PROFILE

GRAPHIC SCALE
5.0 0 2.5 5.0 10.0

NO.	DATE	REVISION	BY
00	10/2016	ORIGINAL ISSUE	ATB

JME
John M. McDonald Engineering
A Division of PRIME AE Group
New York Office
7 South Church Street Schenectady, New York 12305
Ph: 518 382 1774 Fax: 518 382 1776
www.mcdonaldenglineers.com www.primeeng.com

PROJ. ENGR.: ATB | DRAWN BY: BSN | CHECKED BY: JMM

LICENSED PROFESSIONAL ENGINEER JOHN M. MCDONALD NO. 54596 STATE OF NEW YORK

UNAUTHORIZED ALTERATIONS TO THIS DOCUMENT IS A VIOLATION OF SECTION 7209 SUBDIVISION 2 OF NEW YORK STATE EDUCATION LAW

MONTGOMERY COUNTY

CULVERT REPLACEMENT

CONTRACT NO. 3 - TOWN OF AMSTERDAM CULVERT REPLACEMENT
CONTRACT NO. 4 - TOWN OF FLORIDA CULVERT REPLACEMENT

SHEET TITLE:
MCKINNEY ROAD 4A
PROFILE

SCALE: AS SHOWN
FILE NO.: 134-1601-243
DATE: OCTOBER 2016
SHEET NO.: B14

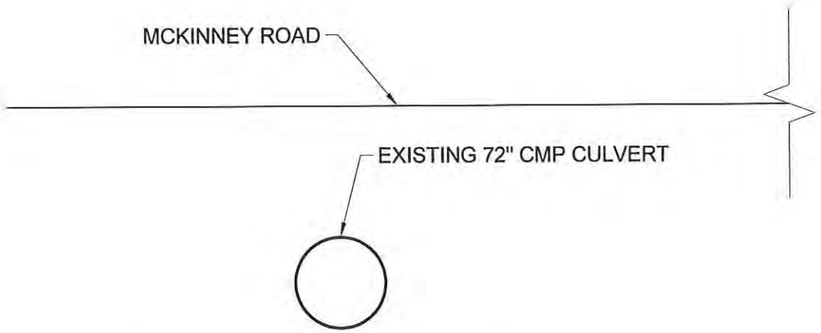

A / B15 EXISTING CROSS SECTION

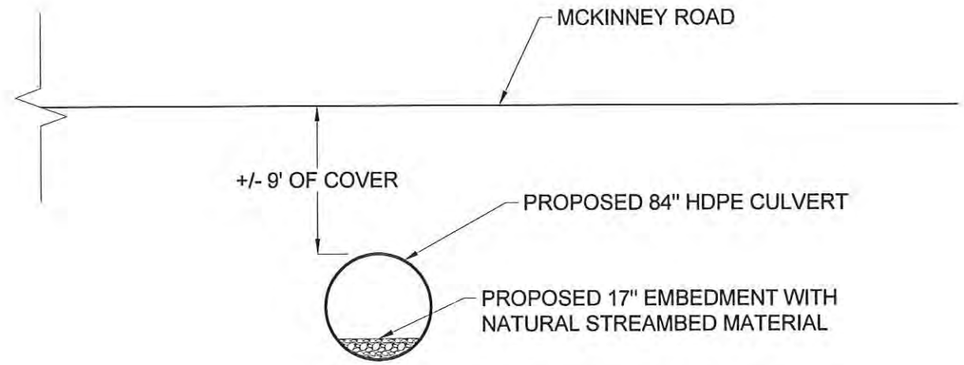

B / B15 PROPOSED CROSS SECTION

NO.	DATE	REVISION	BY
00	10/2016	ORIGINAL ISSUE	ATB

JME
John M. McDonald Engineering
a member of PRIME Group
New York Office
7 South Church Street Schenectady, New York 12305
Ph: 518 382 1774 Fax: 518 382 1776
www.mcdonaldengineers.com www.primeeng.com

PROJ. ENGR.: ATB | DRAWN BY: BSN | CHECKED BY: JMM

UNAUTHORIZED ALTERATIONS TO THIS DOCUMENT IS A VIOLATION OF SECTION 7209 SUBDIVISION 2 OF NEW YORK STATE EDUCATION LAW

MONTGOMERY COUNTY

CULVERT REPLACEMENT

CONTRACT NO. 3 - TOWN OF AMSTERDAM CULVERT REPLACEMENT
CONTRACT NO. 4 - TOWN OF FLORIDA CULVERT REPLACEMENT

SHEET TITLE:

MCKINNEY ROAD 4A
CROSS SECTIONS

SCALE: AS SHOWN

FILE NO.: 134-1601-246

DATE: OCTOBER 2016

SHEET NO.: B15

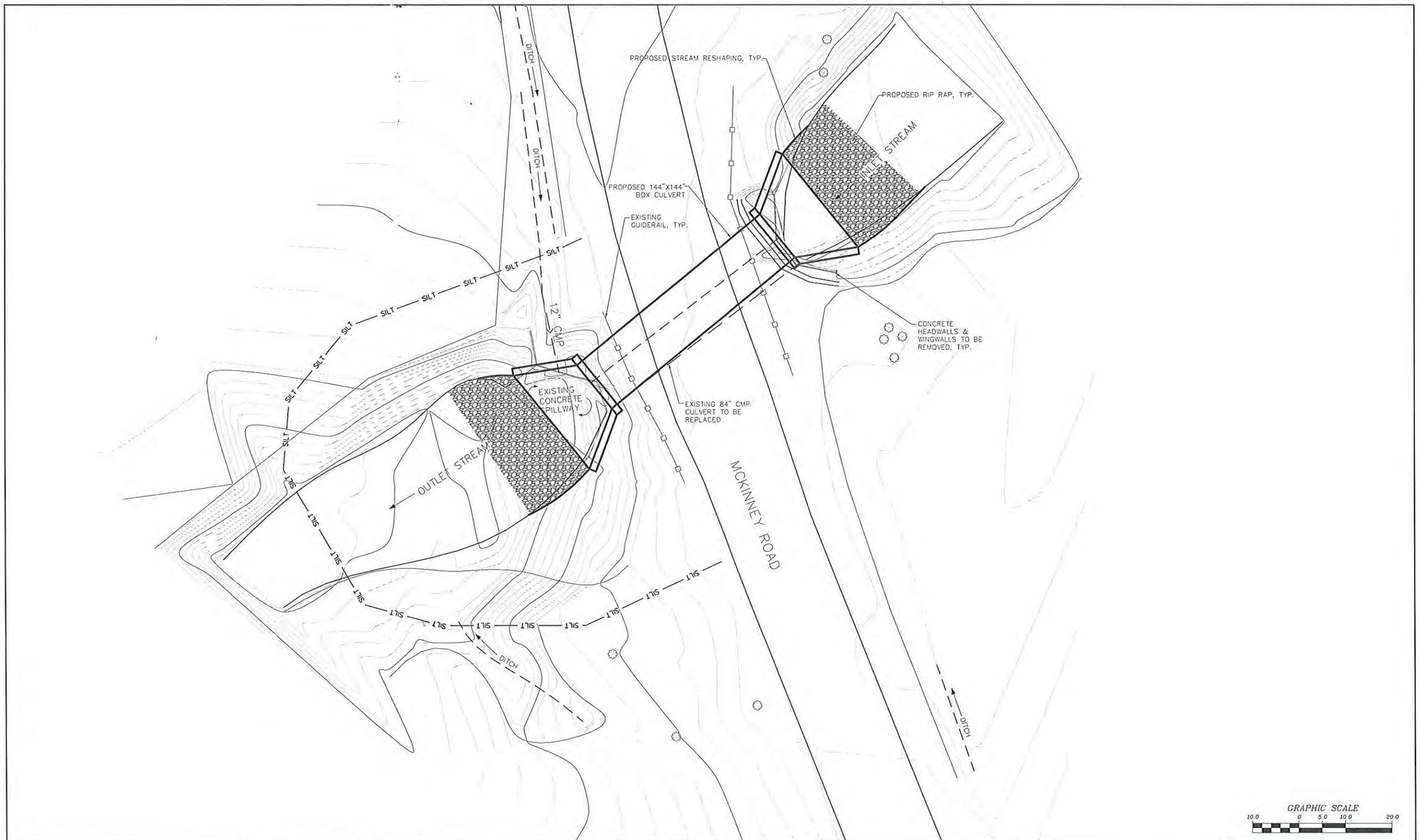

NO.	DATE	REVISION	BY
00	10/2016	ORIGINAL ISSUE	ATB

JME
John M. McDonald Engineering
a member of FEDER Group

New York Office
7 South Church Street Schenectady, New York 12305
Ph: 518 382 1774 Fax: 518 382 1776
www.mcdonaldengineers.com www.primeeng.com

PROJ. ENGR.: ATB | DRAWN BY: BSN | CHECKED BY: JMM

JOHN M. McDONALD PROFESSIONAL ENGINEER LICENSED STATE OF NEW YORK NO. 54508

UNAUTHORIZED ALTERATIONS TO THIS DOCUMENT IS A VIOLATION OF SECTION 7209 SUBDIVISION 2 OF NEW YORK STATE EDUCATION LAW

MONTGOMERY COUNTY

CULVERT REPLACEMENT

CONTRACT NO. 3 - TOWN OF AMSTERDAM CULVERT REPLACEMENT
CONTRACT NO. 4 - TOWN OF FLORIDA CULVERT REPLACEMENT

SHEET TITLE:

MCKINNEY ROAD 4B
SITE PLAN

SCALE: AS SHOWN

FILE NO.: 134-1601-250

DATE: OCTOBER 2016

SHEET NO.: B16

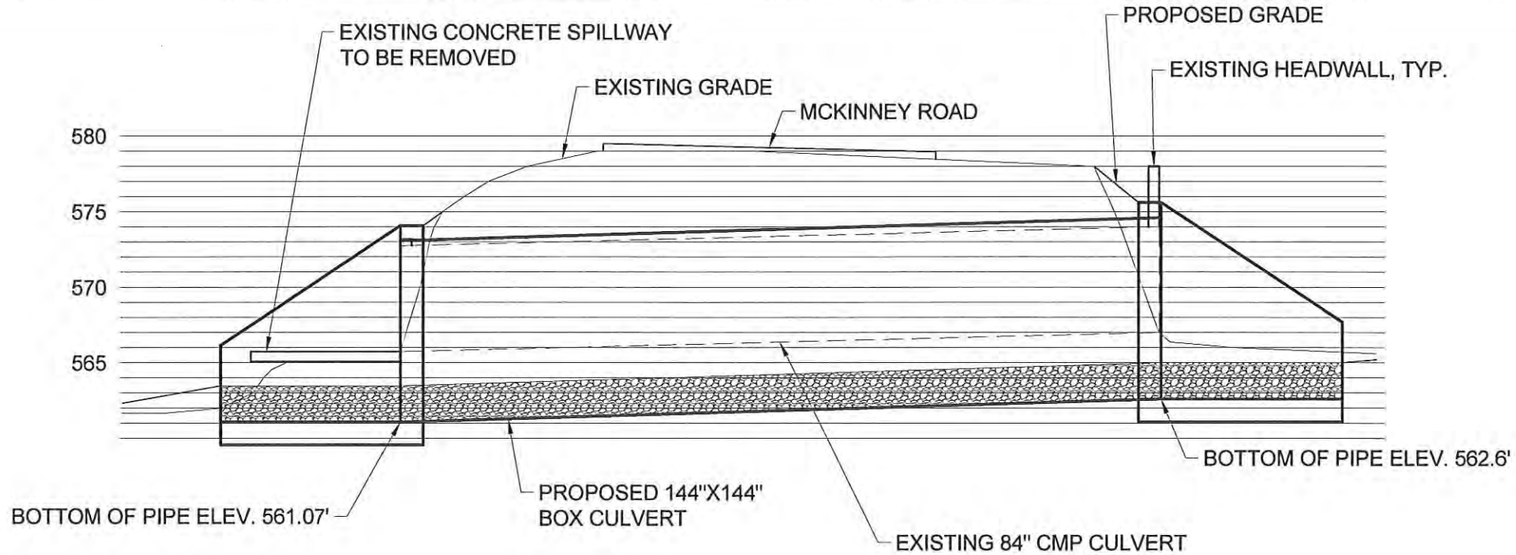

A
B17

MCKINNEY ROAD 4B PROFILE

GRAPHIC SCALE
5.0 0 2.5 5.0 10.0

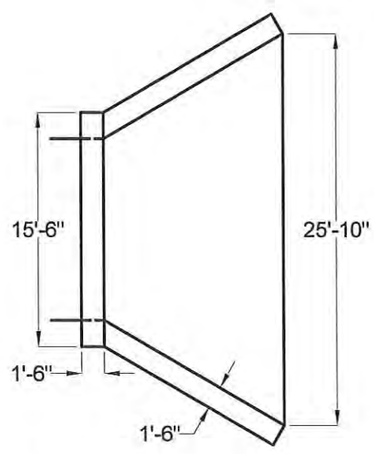

B
B17

HEADWALL PLAN

DO NOT SCALE

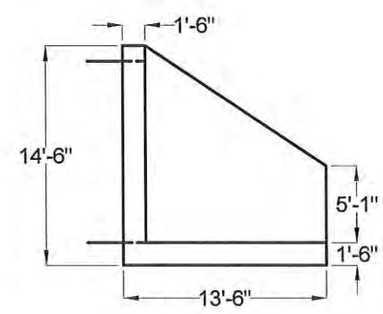

C
B17

HEADWALL ELEVATION

DO NOT SCALE

NO.	DATE	REVISION	BY
00	10/2016	ORIGINAL ISSUE	ATB

JME
John M. McDonald Engineering
Knowledge & Passion

New York Office
7 South Church Street Schenectady, New York 12305
Ph: 518 382 1774 Fax: 518 382 1776
www.mcdonaldengineers.com www.primeeng.com

PROJ. ENGR.: ATB | DRAWN BY: BSN | CHECKED BY: JMM

UNAUTHORIZED ALTERATIONS TO THIS DOCUMENT IS A VIOLATION OF SECTION 7209 SUBDIVISION 2 OF NEW YORK STATE EDUCATION LAW

MONTGOMERY COUNTY

CULVERT REPLACEMENT

CONTRACT NO. 3 - TOWN OF AMSTERDAM CULVERT REPLACEMENT
CONTRACT NO. 4 - TOWN OF FLORIDA CULVERT REPLACEMENT

SHEET TITLE:

MCKINNEY ROAD 4B
PROFILE

SCALE: AS SHOWN
FILE NO.: 134-1601-253
DATE: OCTOBER 2016
SHEET NO.: B17

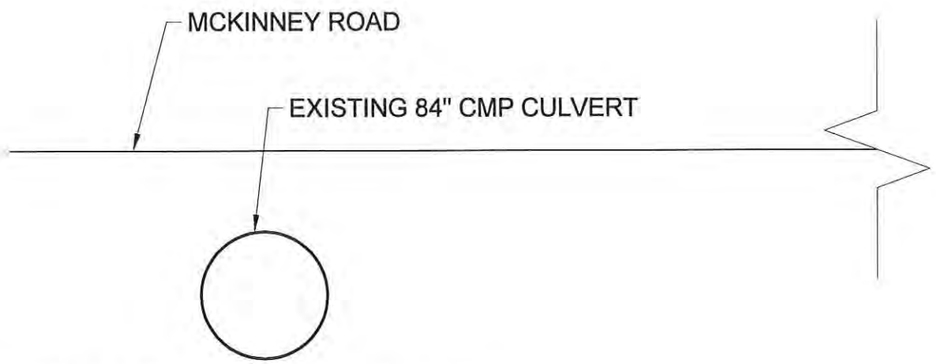

A / B18 EXISTING CROSS SECTION

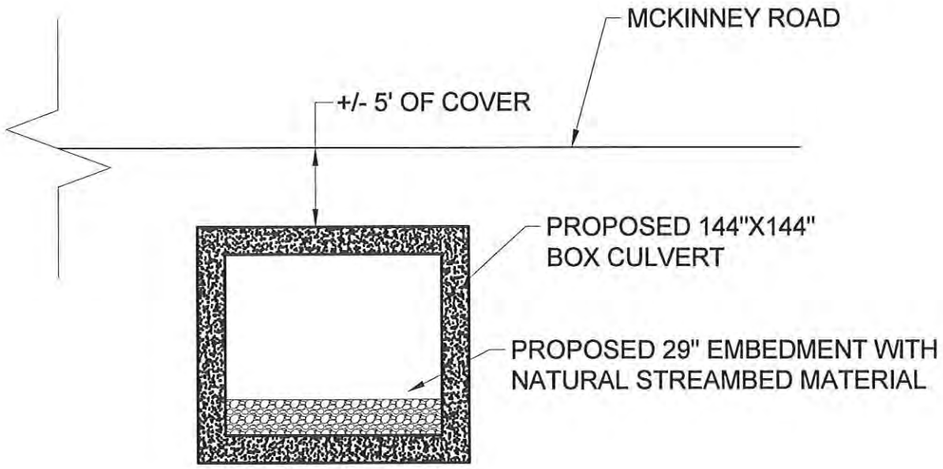

B / B18 PROPOSED CROSS SECTION

NO.	DATE	REVISION	BY
00	10/2016	ORIGINAL ISSUE	ATB

JME
John M. McDonald Engineering
New York Office
7 South Church Street Schenectady, New York 12305
Ph: 518 382 1774 Fax: 518 382 1776
www.mcdonaldengineers.com www.primeeng.com

PROJ. ENGR.: ATB | DRAWN BY: BSN | CHECKED BY: JMM

UNAUTHORIZED ALTERATIONS TO THIS DOCUMENT IS A VIOLATION OF SECTION 7209 SUBDIVISION 2 OF NEW YORK STATE EDUCATION LAW

MONTGOMERY COUNTY

CULVERT REPLACEMENT

CONTRACT NO. 3 - TOWN OF AMSTERDAM CULVERT REPLACEMENT
CONTRACT NO. 4 - TOWN OF FLORIDA CULVERT REPLACEMENT

SHEET TITLE:

MCKINNEY ROAD 4B
CROSS SECTIONS

SCALE: AS SHOWN
FILE NO.: 134-1601-256
DATE: OCTOBER 2016
SHEET NO.: B18

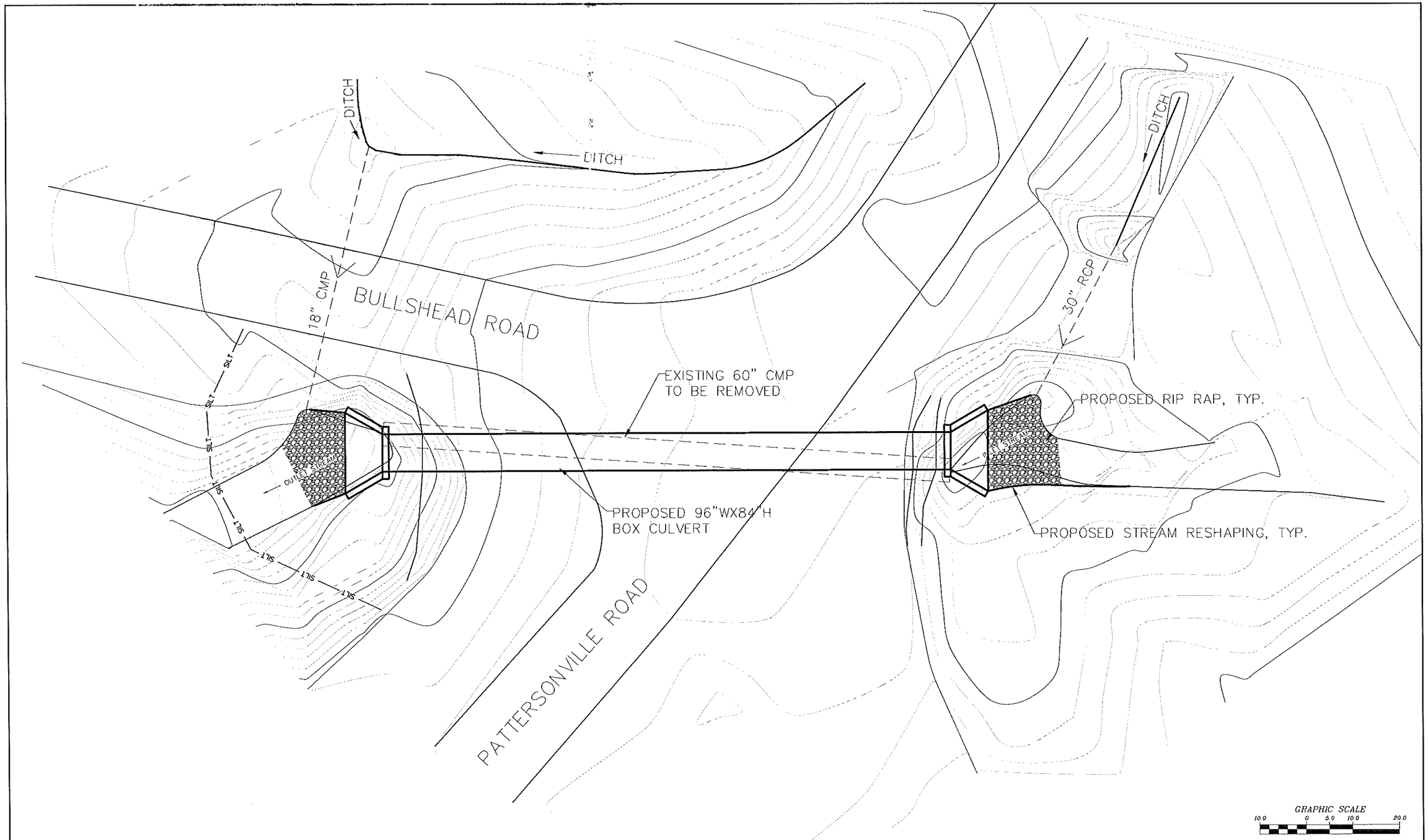

NO.	DATE	REVISION	BY
00	10/2016	ORIGINAL ISSUE	ATB

JME
John M. McDonald Engineering, P.C.
a member of PRIME Group®

New York Office
7 South Church Street Schenectady, New York 12305
Ph: 518 382 1774 Fax: 518 382 1776
www.mcdonaldengineers.com www.primeeng.com

PROJ. ENGR.: ATB | DRAWN BY: BSN | CHECKED BY: JMM

JOHN M. MCDONALD PROFESSIONAL ENGINEER NO. 54508 STATE OF NEW YORK

UNAUTHORIZED ALTERATIONS TO THIS DOCUMENT IS A VIOLATION OF SECTION 7209 SUBDIVISION 2 OF NEW YORK STATE EDUCATION LAW

MONTGOMERY COUNTY

MONTGOMERY COUNTY CULVERT
REPLACEMENT

SHEET TITLE:

PATTERSONVILLE ROAD
SITE PLAN

SCALE: AS SHOWN

FILE NO.: 134-1601-260

DATE: OCTOBER 2016

SHEET NO.: B19

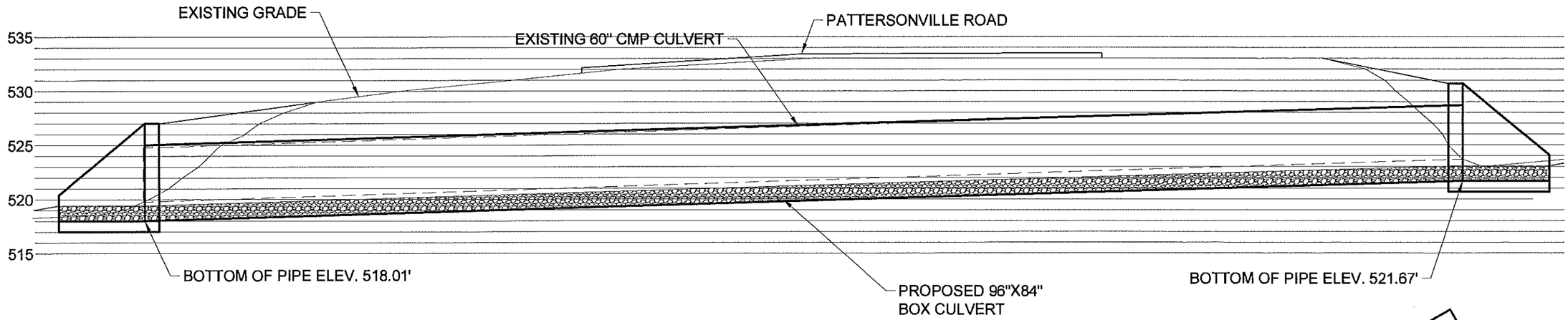

A / B20 PATTERSONVILLE ROAD PROFILE

GRAPHIC SCALE
5.0 0 2.5 5.0 10.0

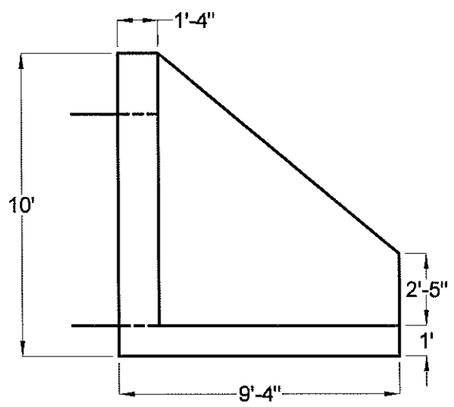

B / B20 HEADWALL ELEVATION

DO NOT SCALE

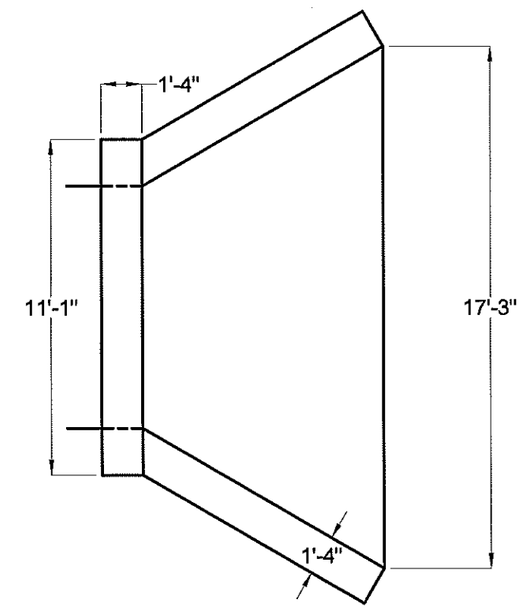

C / B20 HEADWALL PLAN

DO NOT SCALE

NO.	DATE	REVISION	BY
00	10/2016	ORIGINAL ISSUE	ATB

JME
John M. McDonald Engineering, P.C.
a member of PRIME Group®

New York Office
7 South Church Street Schenectady, New York 12305
Ph: 518 382 1774 Fax: 518 382 1776
www.mcdonaldengineers.com www.primeeng.com

PROJ. ENGR.: ATB | DRAWN BY: BSN | CHECKED BY: JMM

JOHN M. MCDONALD LICENSED PROFESSIONAL ENGINEER NO. 54556 STATE OF NEW YORK

UNAUTHORIZED ALTERATIONS TO THIS DOCUMENT IS A VIOLATION OF SECTION 7209 SUBDIVISION 2 OF NEW YORK STATE EDUCATION LAW

MONTGOMERY COUNTY

CULVERT REPLACEMENT

CONTRACT NO. 3 - TOWN OF AMSTERDAM CULVERT REPLACEMENT
CONTRACT NO. 4 - TOWN OF FLORIDA CULVERT REPLACEMENT

SHEET TITLE:

PATTERSONVILLE ROAD PROFILE

SCALE: AS SHOWN

FILE NO.: 134-1601-263

DATE: OCTOBER 2016

SHEET NO.: B20

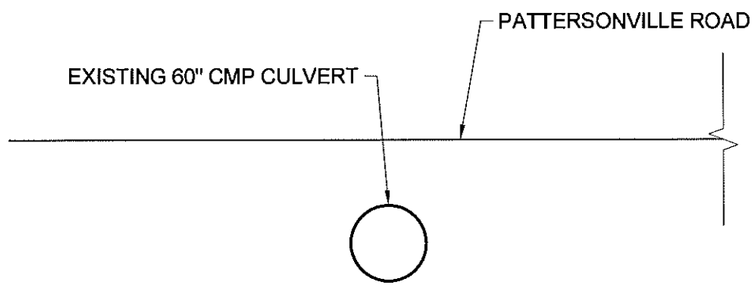

A / B21 EXISTING CROSS SECTION

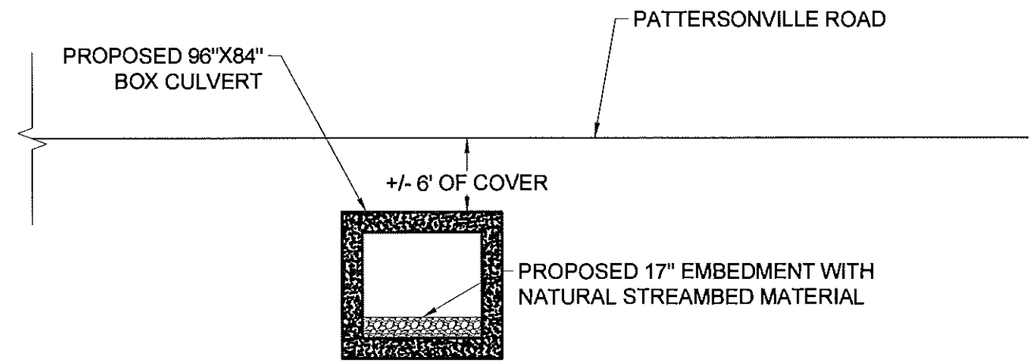

B / B21 PROPOSED CROSS SECTION

NO.	DATE	REVISION	BY
00	10/2016	ORIGINAL ISSUE	ATB

JME
John M. McDonald Engineering, P.C.
a member of PRIME Group®
New York Office
7 South Church Street Schenectady, New York 12305
Ph: 518 382 1774 Fax: 518 382 1776
www.mcdonaldengineers.com www.primeeng.com

PROJ. ENGR.: ATB | DRAWN BY: BSN | CHECKED BY: JMM

UNAUTHORIZED ALTERATIONS TO THIS DOCUMENT IS A VIOLATION OF SECTION 7209 SUBDIVISION 2 OF NEW YORK STATE EDUCATION LAW

MONTGOMERY COUNTY

CULVERT REPLACEMENT

CONTRACT NO. 3 - TOWN OF AMSTERDAM CULVERT REPLACEMENT
CONTRACT NO. 4 - TOWN OF FLORIDA CULVERT REPLACEMENT

SHEET TITLE:

PATTERSONVILLE ROAD CROSS SECTIONS

SCALE: AS SHOWN

FILE NO.: 134-1601-266

DATE: OCTOBER 2016

SHEET NO.: B21

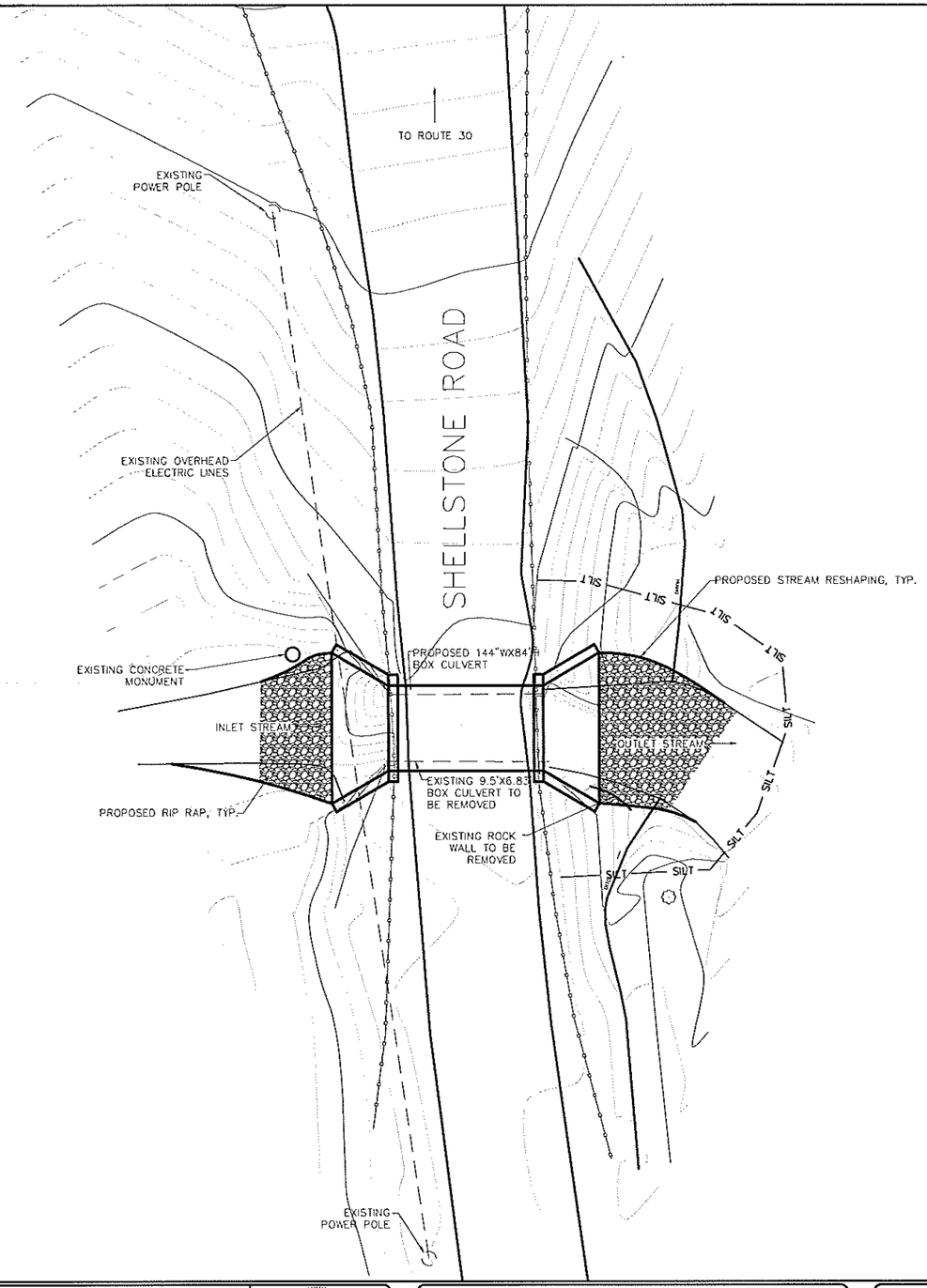

GRAPHIC SCALE
10.0 0 5.0 10.0 20.0

NO.	DATE	REVISION	BY
00	10/2016	ORIGINAL ISSUE	ATB

JME
John M. McDonald Engineering, P.C.
a member of PRIME Group
New York Office
7 South Church Street Schenectady, New York 12305
Ph: 518 382 1774 Fax: 518 382 1776
www.mcdonaldengineers.com www.primeeng.com

PROJ. ENGR.: ATB | DRAWN BY: BSN | CHECKED BY: JMM

JOHN M. MCDONALD NO. 54506 LICENSED PROFESSIONAL ENGINEER STATE OF NEW YORK

UNAUTHORIZED ALTERATIONS TO THIS DOCUMENT IS A VIOLATION OF SECTION 7209 SUBDIVISION 2 OF NEW YORK STATE EDUCATION LAW

MONTGOMERY COUNTY

CULVERT REPLACEMENT

CONTRACT NO. 3 - TOWN OF AMSTERDAM CULVERT REPLACEMENT
CONTRACT NO. 4 - TOWN OF FLORIDA CULVERT REPLACEMENT

SHEET TITLE:

SHELLSTONE ROAD
SITE PLAN

SCALE: AS SHOWN
FILE NO.: 134-1601-270
DATE: OCTOBER 2016
SHEET NO.: B22

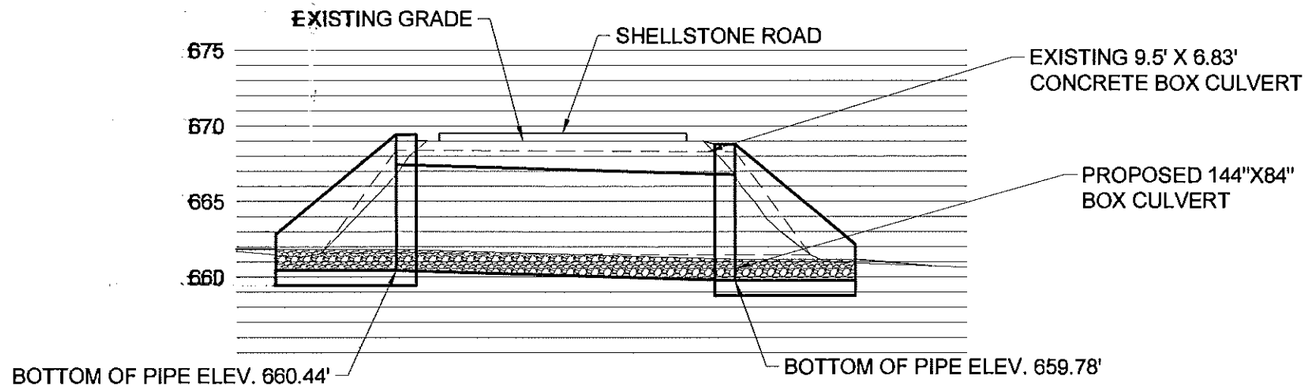

A / B23 SHELLSTONE ROAD BOX CULVERT PROFILE

GRAPHIC SCALE
5.0 0 2.5 5.0 10.0

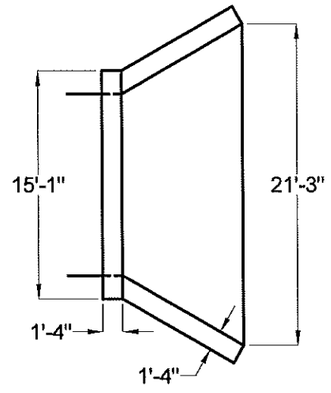

B / B23 HEADWALL PLAN

DO NOT SCALE

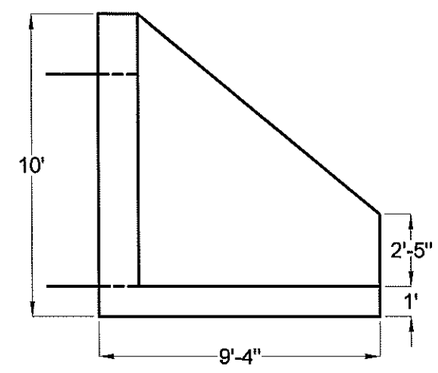

C / B23 HEADWALL ELEVATION

DO NOT SCALE

NO.	DATE	REVISION	BY
00	10/2016	ORIGINAL ISSUE	ATB

JME
John M. McDonald Engineering, P.C.
a member of PRIME Group
New York Office
7 South Church Street Schenectady, New York 12305
Ph: 518 382 1774 Fax: 518 382 1776
www.mcdonaldengineers.com www.primeeng.com

PROJ. ENGR.: ATB | DRAWN BY: BSN | CHECKED BY: JMM

LICENSED PROFESSIONAL ENGINEER JOHN M. McDONALD NO. 54928 STATE OF NEW YORK

UNAUTHORIZED ALTERATIONS TO THIS DOCUMENT IS A VIOLATION OF SECTION 7209 SUBDIVISION 2 OF NEW YORK STATE EDUCATION LAW

MONTGOMERY COUNTY

CULVERT REPLACEMENT

CONTRACT NO. 3 - TOWN OF AMSTERDAM CULVERT REPLACEMENT
CONTRACT NO. 4 - TOWN OF FLORIDA CULVERT REPLACEMENT

SHEET TITLE:

SHELLSTONE ROAD PROFILE

SCALE: AS SHOWN

FILE NO.: 134-1601-273

DATE: OCTOBER 2016

SHEET NO.: B23

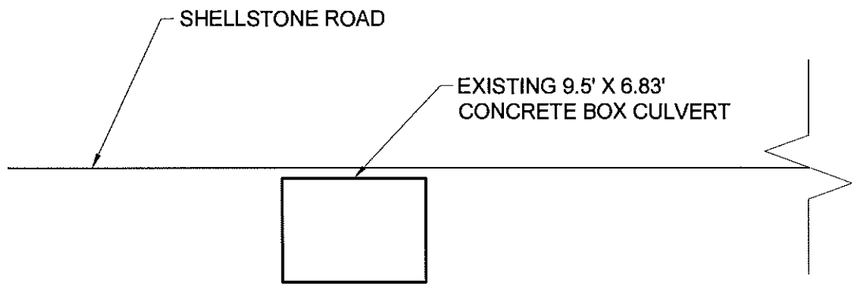

A
B24
EXISTING CROSS SECTION

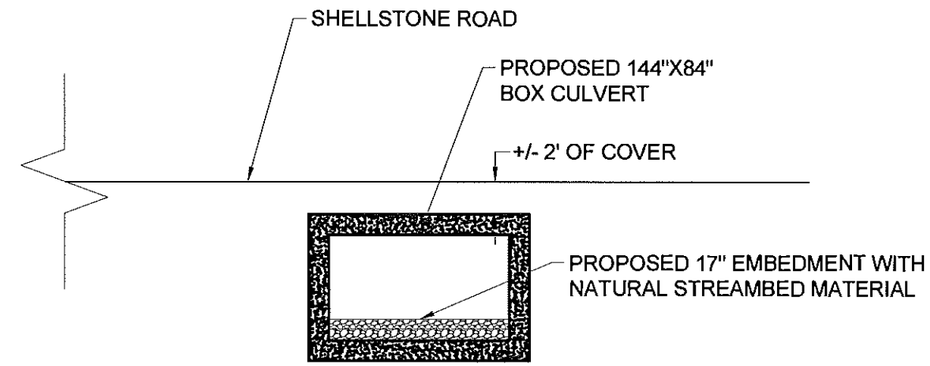

B
B24
PROPOSED CROSS SECTION

NO.	DATE	REVISION	BY
00	10/2016	ORIGINAL ISSUE	ATB

JME
John M. McDonald Engineering, P.C.
a member of PRIME Group®
New York Office
7 South Church Street Schenectady, New York 12305
Ph: 518 382 1774 Fax: 518 382 1776
www.mcdonaldengineers.com www.primeeng.com

PROJ. ENGR.: ATB | DRAWN BY: BSN | CHECKED BY: JMM

UNAUTHORIZED ALTERATIONS TO THIS DOCUMENT IS A VIOLATION OF SECTION 7209 SUBDIVISION 2 OF NEW YORK STATE EDUCATION LAW

MONTGOMERY COUNTY

CULVERT REPLACEMENT

CONTRACT NO. 3 - TOWN OF AMSTERDAM CULVERT REPLACEMENT
CONTRACT NO. 4 - TOWN OF FLORIDA CULVERT REPLACEMENT

SHEET TITLE:

SHELLSTONE ROAD
CROSS SECTIONS

SCALE: AS SHOWN
FILE NO.: 134-1601-276
DATE: OCTOBER 2016
SHEET NO.: B24

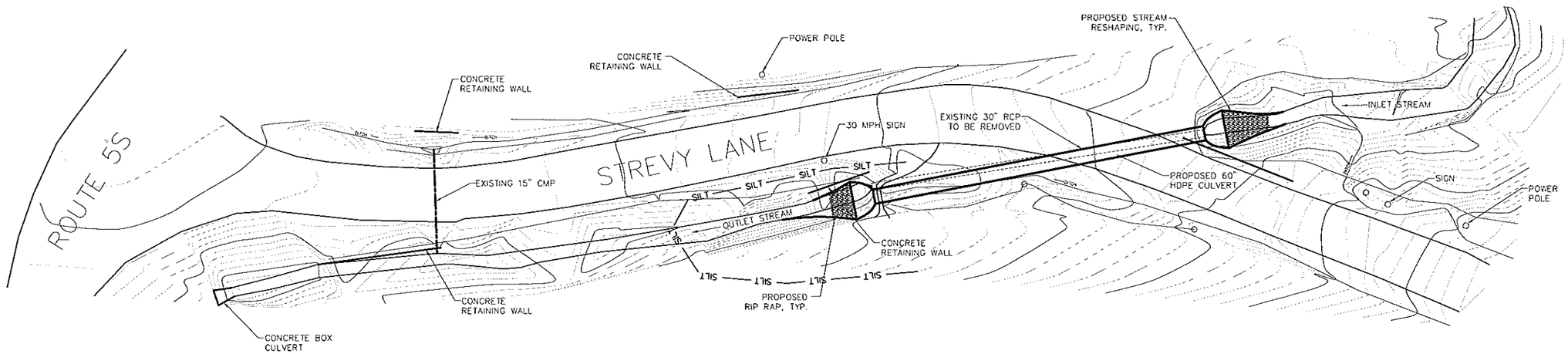

GRAPHIC SCALE
20.0 0 10.0 20.0 40.0

NO.	DATE	REVISION	BY
00	10/2016	ORIGINAL ISSUE	ATB

JME
John M. McDonald Engineering, P.C.
a member of PRIME Group®
New York Office
7 South Church Street Schenectady, New York 12305
Ph: 518 382 1774 Fax: 518 382 1776
www.mcdonaldengineers.com www.primeeng.com

PROJ. ENGR.: ATB | DRAWN BY: BSN | CHECKED BY: JMM

JOHN M. McDONALD LICENSED PROFESSIONAL ENGINEER NO. 54956 STATE OF NEW YORK

UNAUTHORIZED ALTERATIONS TO THIS DOCUMENT IS A VIOLATION OF SECTION 7209 SUBDIVISION 2 OF NEW YORK STATE EDUCATION LAW

MONTGOMERY COUNTY

CULVERT REPLACEMENT

CONTRACT NO. 3 - TOWN OF AMSTERDAM CULVERT REPLACEMENT
CONTRACT NO. 4 - TOWN OF FLORIDA CULVERT REPLACEMENT

SHEET TITLE:

STREVY LANE
SITE PLAN

SCALE: AS SHOWN
FILE NO.: 134-1601-280
DATE: OCTOBER 2016
SHEET NO.: B25

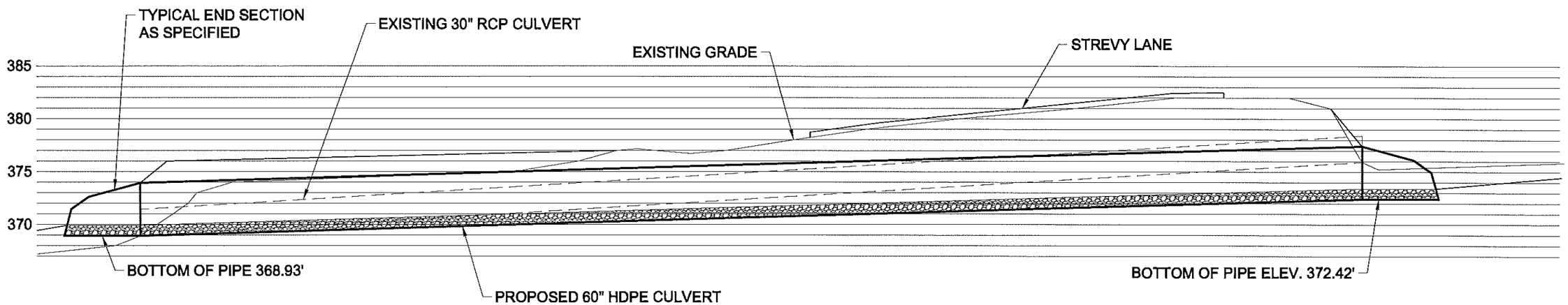

A
B26

STREVY LANE CULVERT PROFILE

GRAPHIC SCALE
5.0 0 2.5 5.0 10.0

NO.	DATE	REVISION	BY
00	10/2016	ORIGINAL ISSUE	ATB

JME
John M. McDonald Engineering, P.C.
a member of PRIME Group®
New York Office
7 South Church Street Schenectady, New York 12305
Ph: 518 382 1774 Fax: 518 382 1776
www.mcdonaldengineers.com www.primeeng.com

PROJ. ENGR.: ATB | DRAWN BY: BSN | CHECKED BY: JMM

UNAUTHORIZED ALTERATIONS TO THIS DOCUMENT IS A VIOLATION OF SECTION 7209 SUBDIVISION 2 OF NEW YORK STATE EDUCATION LAW

MONTGOMERY COUNTY

CULVERT REPLACEMENT

CONTRACT NO. 3 - TOWN OF AMSTERDAM CULVERT REPLACEMENT
CONTRACT NO. 4 - TOWN OF FLORIDA CULVERT REPLACEMENT

SHEET TITLE:
STREVY LANE PROFILE

SCALE: AS SHOWN
FILE NO.: 134-1601-283
DATE: OCTOBER 2016
SHEET NO.: B26

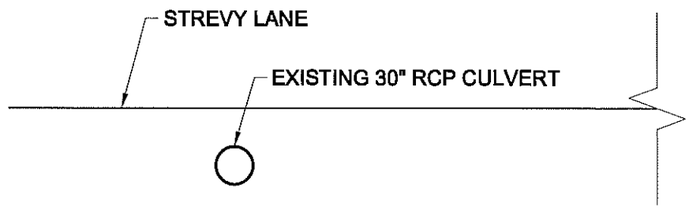

A
B27
EXISTING CROSS SECTION

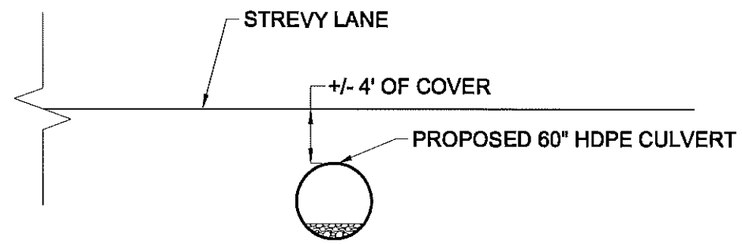

B
B27
PROPOSED CROSS SECTION

NO.	DATE	REVISION	BY
00	10/2016	ORIGINAL ISSUE	ATB

JME
John M. McDonald Engineering, P.C.
a member of PRIME Group
New York Office
7 South Church Street Schenectady, New York 12305
Ph: 518 382 1774 Fax: 518 382 1776
www.mcdonaldengineers.com www.primeeng.com

PROJ. ENGR.: ATB | DRAWN BY: BSN | CHECKED BY: JMM

UNAUTHORIZED ALTERATIONS TO THIS DOCUMENT IS A VIOLATION OF SECTION 7209 SUBDIVISION 2 OF NEW YORK STATE EDUCATION LAW

MONTGOMERY COUNTY

CULVERT REPLACEMENT

CONTRACT NO. 3 - TOWN OF AMSTERDAM CULVERT REPLACEMENT
CONTRACT NO. 4 - TOWN OF FLORIDA CULVERT REPLACEMENT

SHEET TITLE:

STREVY LANE CROSS SECTIONS

SCALE: AS SHOWN
FILE NO.: 134-1601-286
DATE: OCTOBER 2016
SHEET NO.: B27

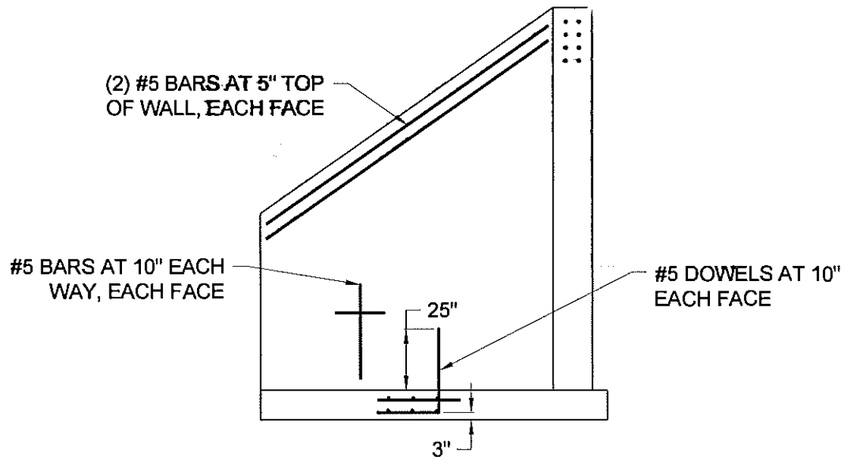

A / A4 WING WALL DETAIL
DO NOT SCALE

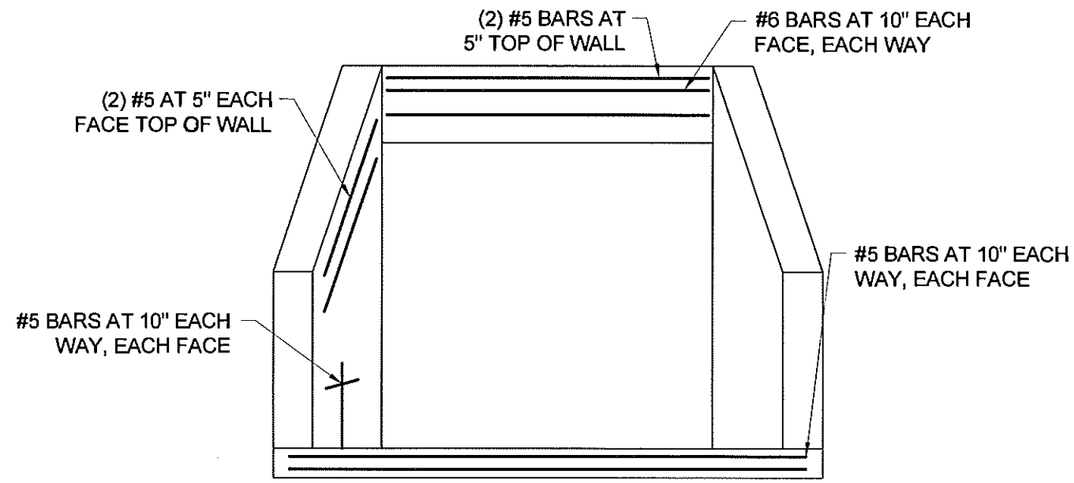

B / A4 HEAD WALL DETAIL
DO NOT SCALE

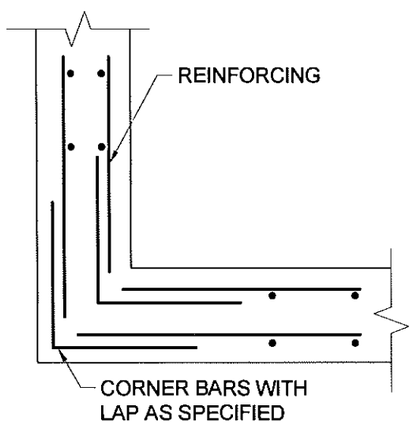

C / A4 CORNER DETAIL
DO NOT SCALE

REINFORCEMENT NOTES:

1. COVER SHALL BE 3" UNLESS NOTED OTHERWISE

2. BAR LAPS SHALL BE 40 BAR DIAMETERS UNLESS NOTED OTHERWISE

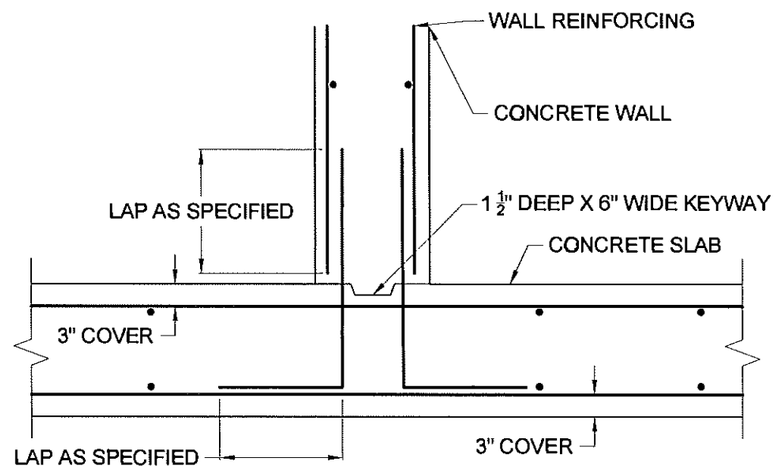

D / A4 SLAB TO WALL DETAIL
DO NOT SCALE

NO.	DATE	REVISION	BY
00	10/2016	ORIGINAL ISSUE	ATB

JME
John M. McDonald Engineering, P.C.
a member of PRIME Group
New York Office
7 South Church Street Schenectady, New York 12305
Ph: 518 382 1774 Fax: 518 382 1776
www.mcdonaldengineers.com www.primeeng.com

PROJ. ENGR.: ATB | DRAWN BY: BSN | CHECKED BY: JMM

UNAUTHORIZED ALTERATIONS TO THIS DOCUMENT IS A VIOLATION OF SECTION 7209 SUBDIVISION 2 OF NEW YORK STATE EDUCATION LAW

MONTGOMERY COUNTY

MIAMI AVENUE CULVERT REPLACEMENT

CONTRACT NO. 1 - CULVERT MATERIALS
CONTRACT NO. 2 - GENERAL CONSTRUCTION

SHEET TITLE:

CONCRETE DETAILS

SCALE: AS SHOWN
FILE NO.: 134-1601-130
DATE: OCTOBER 2016
SHEET NO.: C1

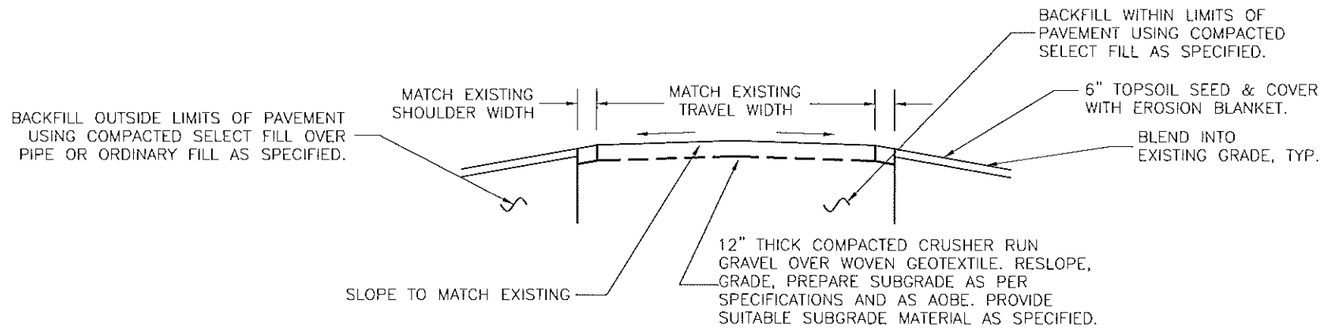

A / C2 ROADWAY DETAIL

NOT TO SCALE

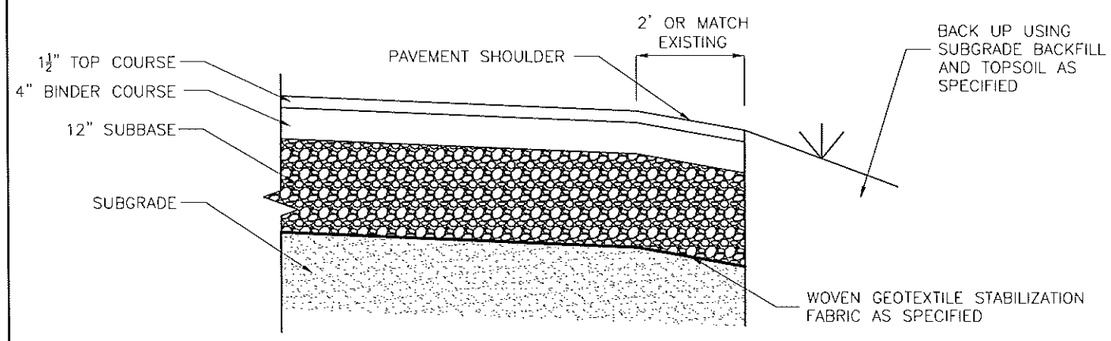

B / C2 PAVING DETAIL W/ PAVED SHOULDER

NOT TO SCALE

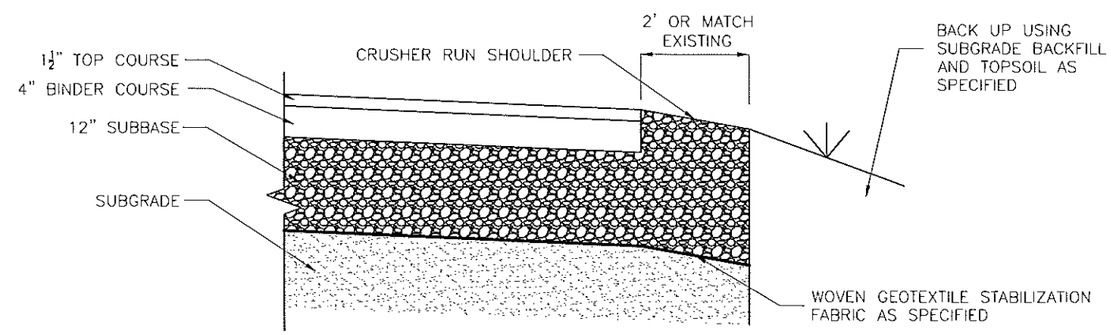

C / C2 PAVING DETAIL W/ UNPAVED SHOULDER

NOT TO SCALE

NO.	DATE	REVISION	BY
00	10/2016	ORIGINAL ISSUE	ATB

JME JOHN M. MCDONALD ENGINEERING, P.C.
7 South Church Street Schenectady, New York 12305
Ph: 518 382 1774 Fax: 518 382 1776 www.mcdonaldengineers.com

PROJ. ENGR.: ATB | DRAWN BY: BSN | CHECKED BY: JMM

UNAUTHORIZED ALTERATIONS TO THIS DOCUMENT IS A VIOLATION OF SECTION 7209 SUBDIVISION 2 OF NEW YORK STATE EDUCATION LAW

MONTGOMERY COUNTY

CULVERT REPLACEMENT

CONTRACT NO. 3 - TOWN OF AMSTERDAM CULVERT REPLACEMENT
CONTRACT NO. 4 - TOWN OF FLORIDA CULVERT REPLACEMENT

SHEET TITLE:

PAVING DETAILS

SCALE: AS SHOWN

FILE NO.: 134-1601-310

DATE: OCTOBER 2016

SHEET NO.: C2

APPENDIX C
SHPO CORRESPONDENCE

NEW YORK STATE OF OPPORTUNITY. | Parks, Recreation, and Historic Preservation

ANDREW M. CUOMO
Governor

ROSE HARVEY
Commissioner

May 8, 2017

Mary Barthelme
Governor's Office of Storm Recovery
99 Washington Ave, Suite 1224
Albany, NY 12231

Re: HTF/ GOSR/ HUD CDBG-DR
Culverts Enlargement Project in the
Towns of Florida and Amsterdam/ Montgomery County
17PR02791

Dear Ms. Barthelme:

Thank you for requesting the comments of the New York State Historic Preservation Office (SHPO). We have reviewed the submitted materials in accordance with Title 54, Section 306108 of the National Historic Preservation Act of 1966. These comments are those of the SHPO and relate only to Historic/ Cultural resources. They do not include other environmental impacts to New York State Parkland that may be involved in or near your project. Such impacts must be considered as part of the environmental review of the project pursuant to the National Environmental Policy Act and/or the State Environmental Quality Review Act (New York Environmental Conservation Law Article 8).

Based on this review, it is the opinion of SHPO that there will be No Historic Properties Affected by the proposed undertaking.

If I can be of further assistance, contact me at (518) 268-2187 or Larry.moss@parks.ny.gov
Sincerely,

L Moss

Larry K Moss, Historic Preservation Technical Specialist
CC: Alicia Shultz, NYSHCR

Governor's Office of
Storm Recovery

ANDREW M. CUOMO
Governor

LISA BOVA-HIATT
Executive Director

April 26, 2017

Mr. Larry Moss
Historic Preservation Technical Specialist
New York State Office of Parks, Recreation and Historic Preservation
Division of Historic Preservation
Peebles Island
P.O. Box 189
Waterford, New York 12188-0189

Re: Section 106 Compliance for the Culverts Enlargement Project, Montgomery County, New York

Dear Mr. Moss,

Pursuant to the Disaster Relief Appropriations Act, 2013 (Public Law 113-2) and the Housing and Community Development Act (42 U.S.C. §5301 et seq.), the Governor's Office of Storm Recovery (GOSR), an office of New York State Homes and Community Renewal's Housing Trust Fund Corporation as a recipient of Community Development Block Grant – Disaster Recovery ("CDBG-DR") funds from the United States Department of Housing and Urban Development ("HUD"), is serving as the entity responsible for compliance with the HUD environmental review procedures set forth in 24 CFR Part 58. GOSR is acting on behalf of HUD in providing the enclosed project information and request for consultation.

GOSR processes environmental reviews for projects funded with HUD CDBG-DR on a case-by-case basis. A consultation request for the project described herein will also be sent to the Tribal Historic Preservation Offices for the St. Regis Mohawk Tribe and the Mohawk Nation. In accordance with Section 106 of the National Historic Preservation Act ("NHPA") of 1966, as amended (54 U.S.C. §306108), and its implementing regulations, 36 Code of Federal Regulations ("CFR") Part 800, this letter serves as notification of the proposed action.

Proposed Project Description and Area of Potential Effects: GOSR proposes to provide CDBG-DR funding to the Towns of Florida and Amsterdam, Montgomery County, New York to enlarge existing culverts at eleven road crossings throughout the Towns (Project). During Hurricane Irene and Tropical Storm Lee, the existing culvert crossings proved insufficient to handle major flooding and were overwhelmed by flood waters. Flooding of nearby roads and homes occurred in many areas throughout both towns. The construction component of the Project will alleviate the risk of flooding in each of the locations during future storm events.

The Project includes a typical culvert upgrade of various sizes to a box concrete culvert or high density polyethylene pipe (HDPE), with stone riprap aprons and channel rehabilitation that will be limited to the channel and extend 50 feet from the headwalls at both the upstream and downstream ends.

The overall Project requires: vegetation removal; removal of street surfaces including curbs and walks in some places; excavations; cutting; filling and grading; installation of pipes and culverts; construction of soil berms; placement of rip-rap or similar armoring; and post-construction restoration of soil surfaces and the like.

The smaller culverts would be made of HDPE and the larger culverts would be four-sided precast concrete box culverts. At several locations the Project would include removal of existing headwalls, stream reshaping and installation of rip-rap at the inlet and outlet of the proposed culvert, and alignment correction. The culvert bottoms would have embedment (i.e., be filled to an appropriate depth) of natural streambed material. It is anticipated that construction would involve substantial earthwork, and temporary or permanent easements may be required. Construction would occur within the existing rights-of-way of each road to the extent feasible.

The area of potential effects (APE) for each culvert enlargement would include all areas that will be affected by ground disturbance. In addition to the locations immediately effected by the enlargement of the 11 culverts, the APE also includes a 30 foot buffer zone around the work area. Consideration of the impact on cultural resources of the Project includes all potential cultural resources within the APE.

This construction will occur at the following eleven locations (Figs. 1 and 2) and is described for each culvert in Table 1.

Table 1
Culvert Locations and Construction Details

Culvert Identification	Location	Construction Details
Culvert No. 4A	McKinney Road (1,600 feet north of Lost Valley Road) Town of Florida, New York	The existing 72-inch corrugated metal pipe (CMP) culvert with a concrete mid-section conveying an unnamed stream beneath McKinney Road would be removed, realigned and replaced with an 84-inch HDPE culvert. The bottom of the proposed new culvert would have a 17-inch embedment (i.e., be filled to a depth of 17 inches) of natural streambed material. The existing stone headwall at the inlet of the existing culvert also would be removed. The Project at this site would include stream reshaping, and rip-rap would be installed at the inlet and outlet of the proposed culvert (Fig. 3).
Culvert No. 4B	McKinney Road (3,200 feet north of Peck Road) Town of Florida, New York	The existing 84-inch CMP culvert conveying an unnamed stream beneath McKinney Road would be removed, realigned and replaced with a 144-inch by 144-inch box culvert. The bottom of the proposed new culvert would have a 29-inch embedment of natural streambed material. The existing concrete headwall and wing walls at the inlet of the existing culvert, and the existing spillway also would be removed. The Project at this site would include stream reshaping, and rip-rap would be installed at the inlet and outlet of the proposed culvert (Fig. 4).
Culvert No. 5B	Bulls Head Road (450 feet north of Thayer Road) Town of Florida, New York	The existing 48-inch HDPE culvert conveying an unnamed stream beneath Bullshead Road would be removed, realigned and replaced with a 66-inch HDPE culvert with a proposed 13-inch embedment of natural streambed material. Stacked stone at the inlet and outlet of the existing culvert also would be removed. The Project at this site would include stream reshaping, and rip-rap would be installed at the inlet and outlet of the proposed culvert. The drainage ditch along the east side of the road would be lined with stone (Fig. 5).
Culvert No. 6A	Pattersonville Road (100 feet south of Bulls Head Road) Town of Florida, New York	The existing 60-inch CMP culvert conveying an unnamed stream beneath Pattersonville Road at the east side of the intersection with Bullshead Road would be removed, realigned and replaced with a 96-

Table 1
Culvert Locations and Construction Details

Culvert Identification	Location	Construction Details
		inch by 84-inch box culvert. The bottom of the proposed new culvert would have a of 17-inch embedment of natural streambed material. The Project at this site would include stream reshaping, and rip-rap would be installed at the inlet and outlet of the proposed culvert (Fig. 6).
Fort Hunter Road	560 feet southeast of Morris Road Town of Florida, New York	The existing 3-foot by 5.25-foot concrete box culvert conveying an unnamed stream beneath Fort Hunter Road would be removed and replaced with an 84-inch HDPE culvert. The bottom of the proposed new culvert would have a 17-inch embedment of natural streambed material. The existing headwall and wing walls at the inlet and outlet of the existing culvert also would be removed. The Project at this site would include stream reshaping, and rip-rap would be installed at the inlet and outlet of the proposed culvert (Fig. 7).
Hartley Road	900 feet southeast of Snooks Corners Road Town of Florida, New York	The existing 48-inch CMP culvert conveying an unnamed stream beneath Hartley Road would be removed and replaced with an 84-inch HDPE culvert. The bottom of the proposed new culvert would have a 17-inch embedment of natural streambed material. The existing headwall of the existing culvert also would be removed. Rip-rap would be installed at the inlet and outlet of the proposed culvert (Fig. 8).
Langley Road	700 feet southwest of Thayer Road Town of Florida, New York	The existing 36-inch CMP culvert crossing Langley Road adjacent to the intersection with Covey Road would be removed and replaced with a 60-inch by 36-inch box culvert. The bottom of the proposed new culvert would have a 17-inch embedment of natural streambed material. The existing concrete headwall and wing walls at the inlet and stone headwall at the outlet of the existing culvert also would be removed. The Project at this site would include stream reshaping, and rip-rap would be installed at the inlet and outlet of the proposed culvert. Stone would be installed at the ditch at the inlet of the proposed culvert, and the outlet stream would be diverted to the existing stream, approximately 1,200 feet to the west (Fig. 9).
McKay Road No. 1	600 feet south of McDonald Drive Town of Amsterdam, New York	The three existing CMP culverts would be replaced by larger HDPE culverts. Rip-rap would be installed at the ends of each culvert. The 24-inch culvert extending along the stone driveway to the west of McKay Road and extending to the ditch on the east side of the road would be replaced with a 36-inch culvert and would include a 7-inch embedment of natural streambed material. The 3-foot by 4-foot culvert in the same area that extends to the ditch on the west side of the road would be removed, realigned, and replaced by a 60-inch culvert with a 12-inch embedment of natural streambed material. The 24-inch culvert, carrying the ditch along the east side of the road beneath an asphalt drive, would be replaced by a 36-inch culvert with a 7-inch embedment of natural streambed material (Fig. 10).
McKay Road No. 2	2,000 feet south of McDonald Drive Town of Amsterdam, New York	The existing 30-inch reinforced concrete pipe that conveys Fitzpatrick Creek under McKay Road would be removed, realigned, and replaced by a 60-inch HDPE culvert with a 12-inch embedment of natural streambed material. The Project at this site would include stream reshaping, and rip-rap would be installed at each end of the culvert (Fig. 11).

Table 1
Culvert Locations and Construction Details

Culvert Identification	Location	Construction Details
Strevy Lane	1,100 feet northwest of intersection with Fort Hunter Road Town of Florida, New York	The existing 30-inch reinforced concrete pipe that conveys an unnamed stream under Strevy Lane near its intersection with State Route 30 would be removed, realigned, and replaced with a 60-inch HDPE culvert. The bottom of the proposed new culvert would be lined with natural streambed material. The Project at this site would include stream reshaping, and rip-rap would be installed at the inlet and outlet of the proposed culvert (Fig. 12).
Shellstone Road	200 feet southwest of Route 30/Sulphur Springs Road Town of Florida, New York	The existing 9.5-foot by 6.83-foot concrete box culvert conveying an unnamed stream beneath Shellstone Road near its intersection with State Route 5S would be removed and replaced with a 144-inch by 84-inch box culvert. The bottom of the proposed new culvert would have a 17-inch embedment of natural streambed material. The Project at this site would include stream reshaping, and rip-rap would be installed at the inlet and outlet of the proposed culvert (Fig. 13).

Assessment of Cultural Resources Sensitivity: The assessment of effects on cultural resources resulting from the enlargement of 11 culverts in the towns of Florida and Amsterdam, Montgomery County, New York is based primarily on the presence of documented cultural resources in or near the APE according to the New York State Cultural Resource Information System (NY-CRIS). The potential cultural resources sensitivity of each culvert location and the potential Project effect on each is described in Table 2.

Table 2
Culvert-Specific Cultural Resources Sensitivity and Potential Project Effects

Culvert Identification	Potential Cultural Resources Sensitivity	Potential Project Effect
Culvert No. 4A	This culvert is not in an archaeologically sensitive area or in the immediate vicinity of any historic structures according to NY-CRIS. However, an archaeologically sensitive area is located approximately 185 feet to the southeast of the APE suggesting the location may be categorized as having high archaeological sensitivity.	Due to disturbance caused by previous culvert construction within the APE it is unlikely that the proposed culvert improvements will impact any cultural resources.
Culvert No. 4B	This culvert is within an archaeologically sensitive area according to NY-CRIS.	Due to disturbance caused by previous culvert construction within the APE it is unlikely that the proposed culvert improvements will impact any cultural resources.
Culvert No. 5B	This culvert is not within an archaeologically sensitive area and no historic structures are in the immediate vicinity according to NY-CRIS.	The Project is unlikely to affect NRHP-eligible resources at this location.
Culvert No. 6A	This culvert is not within an archaeologically sensitive area and no historic structures are in the immediate vicinity according to NY-CRIS.	The Project is unlikely to affect NRHP-eligible resources at this location.
Fort Hunter Road	This culvert is within an archaeologically sensitive area according to NY-CRIS.	Due to disturbance caused by previous culvert construction within the APE it

Table 2
Culvert-Specific Cultural Resources Sensitivity and Potential Project Effects

Culvert Identification	Potential Cultural Resources Sensitivity	Potential Project Effect
		is unlikely that the proposed culvert improvements will impact any cultural resources.
Hartley Road	This culvert is within an archaeologically sensitive area according to NY-CRIS.	Due to disturbance caused by previous culvert construction within the APE it is unlikely that the proposed culvert improvements will impact any cultural resources.
Langley Road	This culvert is not within an archaeologically sensitive area and no historic structures are in the immediate vicinity according to NY-CRIS. However, the proposed APE is approximately 400 feet west of Terwilleger Creek and the APE's proximity to a drainage increases its potential to be archaeologically sensitive.	Due to disturbance caused by previous culvert construction within the APE it is unlikely that the proposed culvert improvements will impact any cultural resources.
McKay Road No. 1	This culvert is not within an archaeologically sensitive area and no historic structures are in the immediate vicinity according to NY-CRIS. However, the proposed APE is approximately 195 feet west of Fitzpatrick Creek and the APE's proximity to a drainage increases its potential to be archaeologically sensitive.	Due to disturbance caused by previous culvert construction within the APE it is unlikely that the proposed culvert improvements will impact any cultural resources.
McKay Road No. 2	This culvert is not within an archaeologically sensitive area and no historic structures are in the immediate vicinity according to NY-CRIS. However, the proposed APE is approximately 90 feet west of Fitzpatrick Creek and 500 feet northeast of an archaeologically sensitive area according to NY-CRIS. The APE's proximity to a drainage increases its potential to be archaeologically sensitive.	Due to disturbance caused by previous culvert construction within the APE it is unlikely that the proposed culvert improvements will impact any cultural resources.
Strevey Lane	This culvert is within an archaeologically sensitive area according to NY-CRIS. In addition, the proposed APE is approximately 700 feet west of an archaeologically surveyed area (16SR00840) which identified both precontact archaeological material and historic architecture (Newkirk-Reese Farm outbuildings). The proposed APE is also approximately 900 feet east of Schoharie Creek. This area may be categorized as of high potential archaeological sensitivity.	Due to disturbance caused by previous culvert construction within the APE it is unlikely that the proposed culvert improvements will impact any cultural resources.
Shellstone Road	This culvert is not within an archaeologically sensitive area and no historic structures are in the immediate vicinity according to NY-CRIS. However, the proposed APE is located on a tributary of Chuctanunda Creek. This area may be categorized as of high potential archaeological sensitivity.	Due to disturbance caused by previous culvert construction within the APE it is unlikely that the proposed culvert improvements will impact any cultural resources.

1/NRHP = National Register of Historic Places

Request for Comment: The purpose of this letter is to initiate consultation pursuant to Section 106 of the NHPA per the implementing regulations at 36 Code of Federal Regulations (CFR) Part 800. GOSR respectfully requests your review of the proposed Project described herein. If you have any questions or require additional information regarding this request, please feel free to contact me at (518) 474-0647 or via email at Alicia.Shultz@nyshcr.gov. Thank you for your time and consideration.

Sincerely,

Alicia Shultz
Community Developer - Environmental Services
Governor's Office of Storm Recovery
NYS Homes and Community Renewal

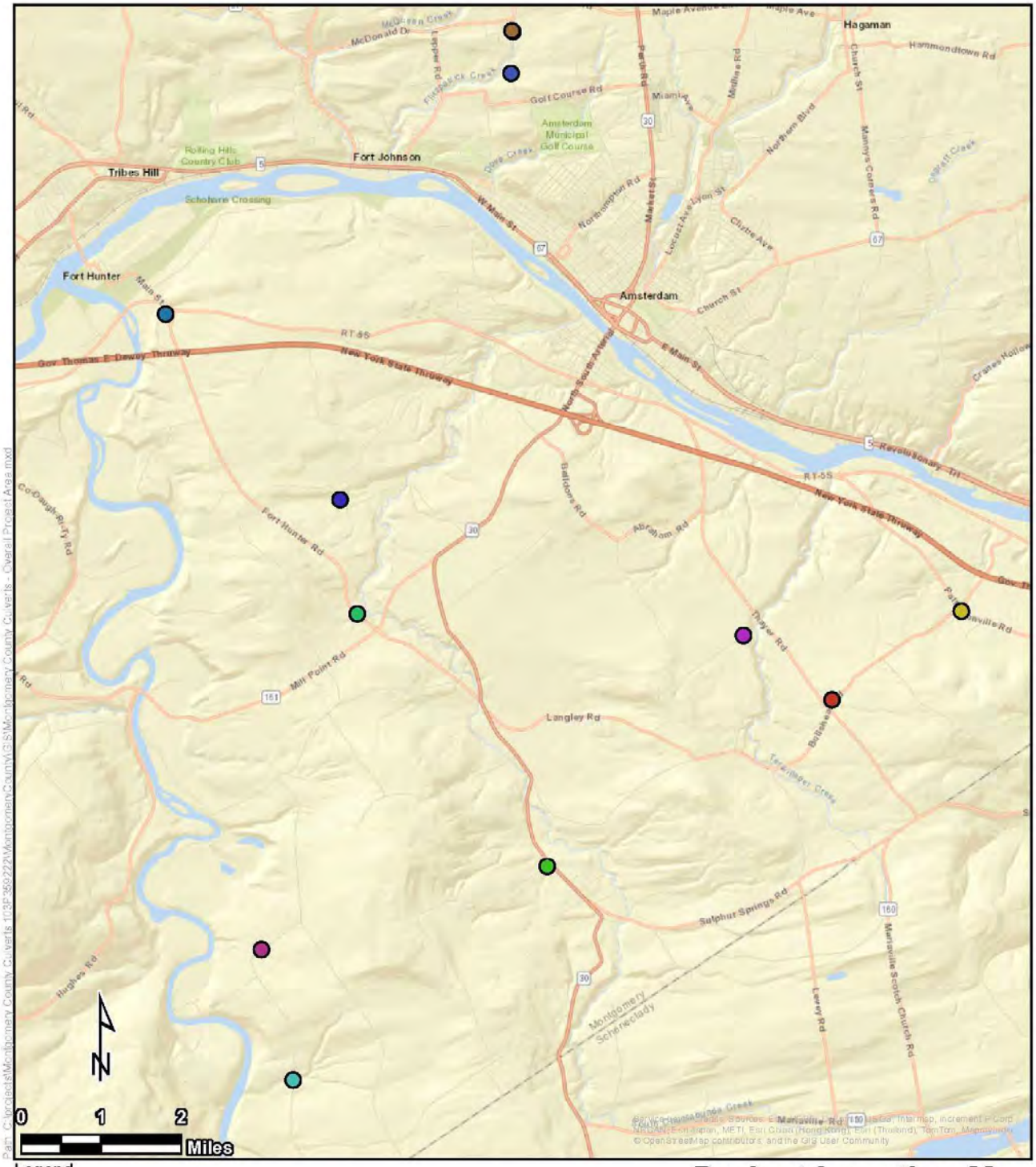

Legend

Culvert Locations

- Bullshead Road
- Fort Hunter Road
- Hartley Road
- Langley Road
- McKay Road 1
- McKay Road 2
- McKinney Road 4A
- McKinney Road 4B
- Pattersonville Road
- Shellstone Road
- Strevy Lane

Tetra Tech, Inc

Project Location Map

Montgomery County Culverts
Bullshead Road, Fort Hunter Road, Hartley Road,
Langley Road, McKay Road, McKinney Road,
Pattersonville Road, Shellstone Road, and Strevy Lane
Montgomery County, New York

Figure 1

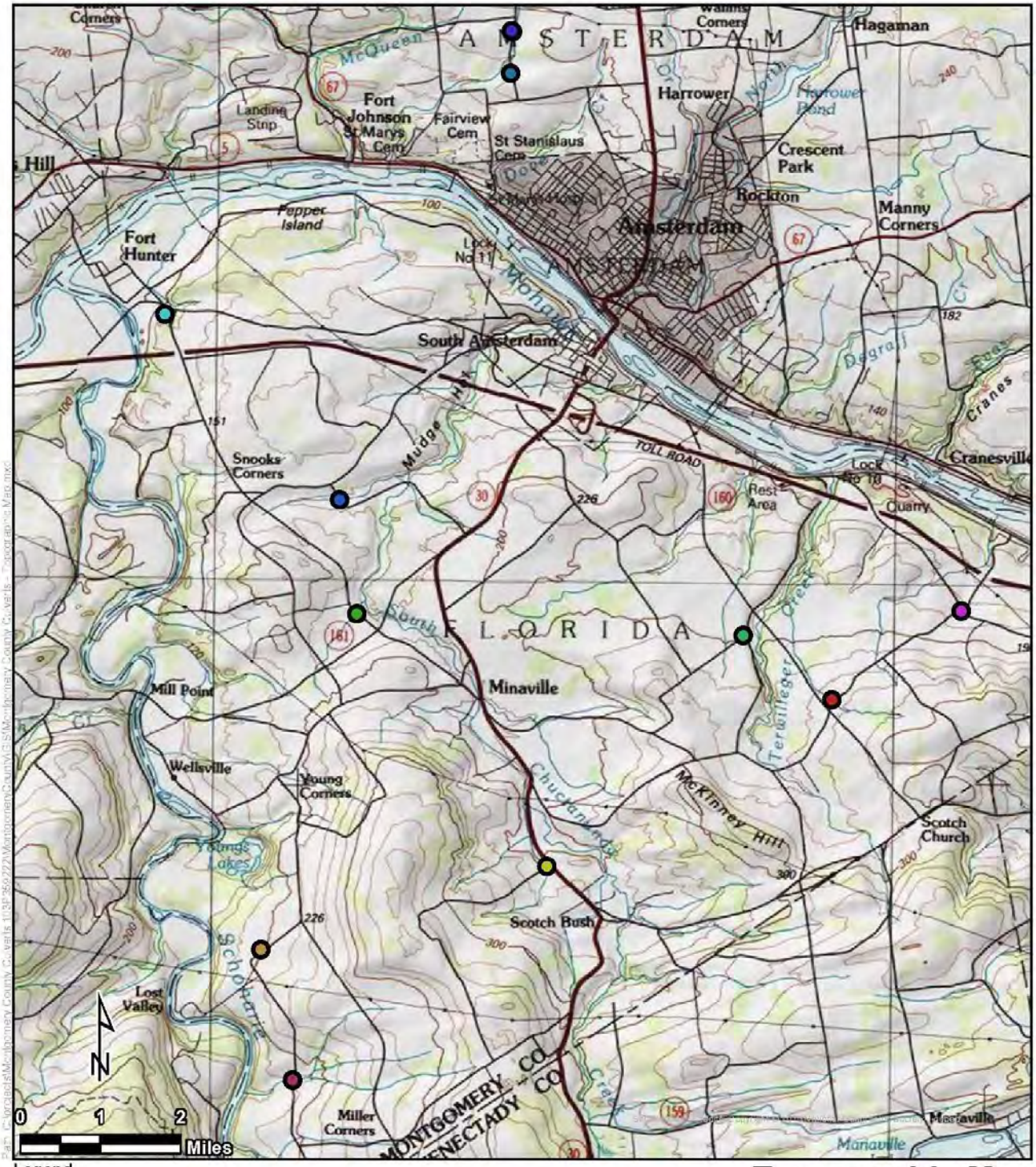

Legend

Culvert Locations

- Bullshead Road
- Fort Hunter Road
- Hartley Road
- Langley Road
- McKay Road 1
- McKay Road 2
- McKinney Road 4A
- McKinney Road 4B
- Pattersonville Road
- Shellstone Road
- Strevy Lane

Tetra Tech, Inc

Topographic Map

Montgomery County Culverts
Bullshead Road, Fort Hunter Road, Hartley Road,
Langley Road, McKay Road, McKinney Road,
Pattersonville Road, Shellstone Road, and Strevy Lane
Montgomery County, New York

Figure 2

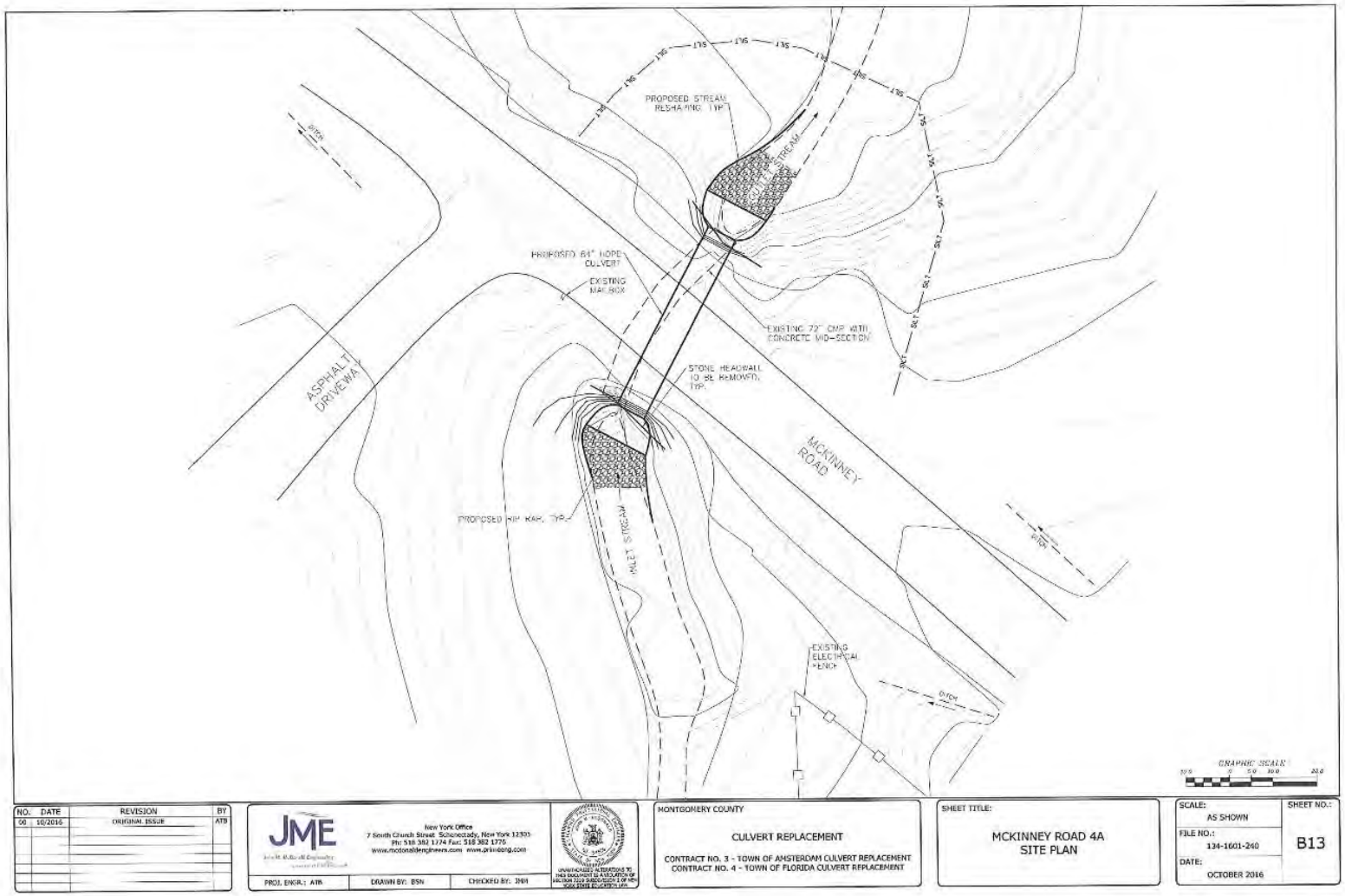
PROPOSED STREAM RESHAPING, TYP.
PROPOSED 84" HDPE CULVERT
EXISTING MAILBOX
EXISTING 72" CMP WITH CONCRETE MID-SECTION
STONE HEADWALL TO BE REMOVED, TYP.
ASPHALT DRIVEWAY
MCKINNEY ROAD
PROPOSED RIP RAP, TYP.
EXISTING ELECTRICAL FENCE
GRAPHIC SCALE
NO. DATE REVISION BY
00 10/2016 ORIGINAL ISSUE ATB
JME
New York Office
7 South Church Street Schenectady, New York 12305
Ph: 518 382 1774 Fax: 518 382 1775
www.mcdonaldengineers.com www.jme-eng.com
PROJ. ENGR.: ATB
DRAWN BY: BSN
CHECKED BY: JMH
MONTGOMERY COUNTY
CULVERT REPLACEMENT
CONTRACT NO. 3 - TOWN OF AMSTERDAM CULVERT REPLACEMENT
CONTRACT NO. 4 - TOWN OF FLORIDA CULVERT REPLACEMENT
SHEET TITLE:
MCKINNEY ROAD 4A
SITE PLAN
SCALE: AS SHOWN
FILE NO.: 134-1601-240
DATE: OCTOBER 2016
SHEET NO.: B13

Figure 3.

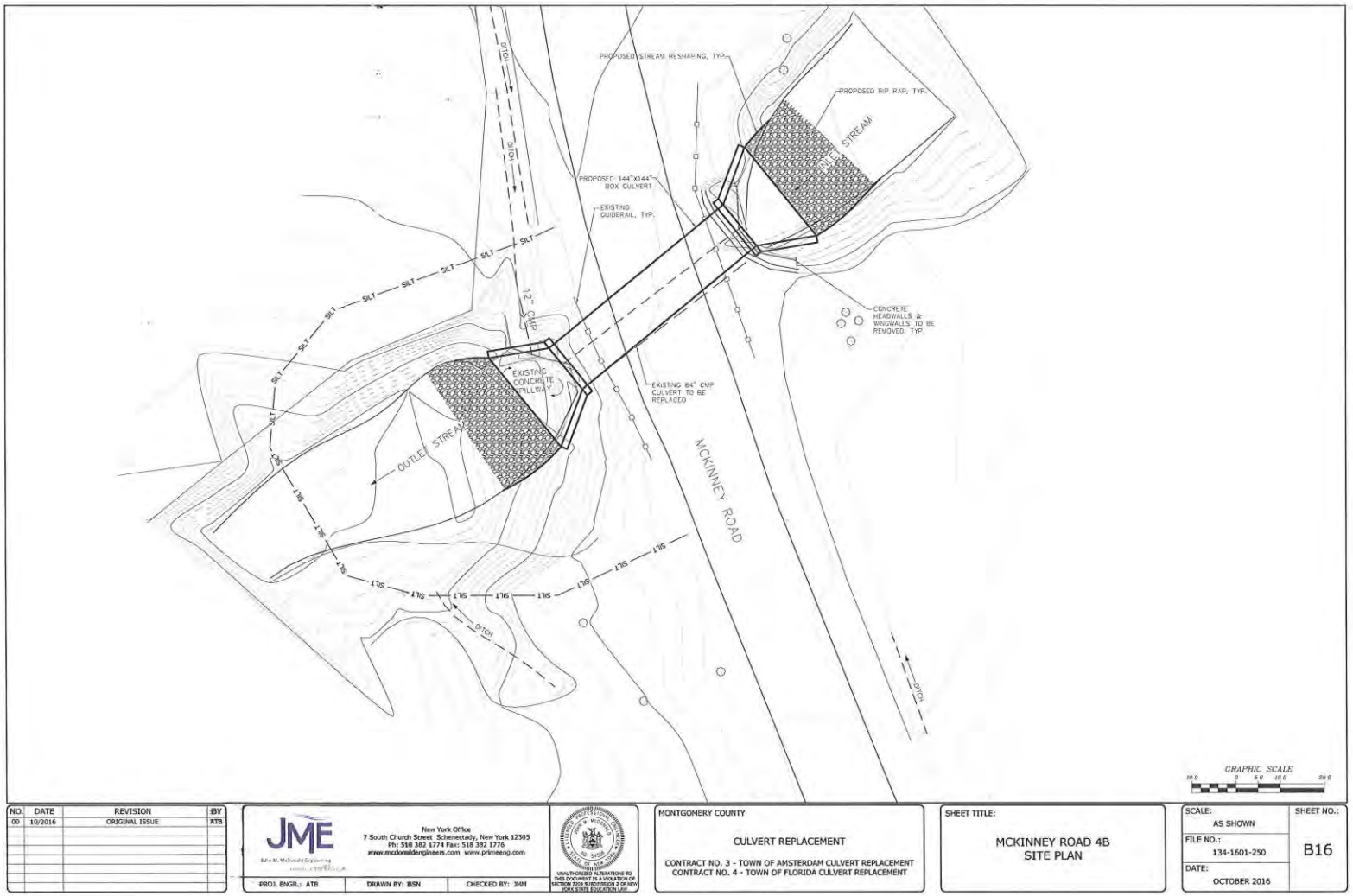
PROPOSED STREAM RESHAPING, TYP.
PROPOSED RIP RAP, TYP.
STREAM
PROPOSED 144"X144" BOX CULVERT
EXISTING GUIDERAIL, TYP.
CONCRETE HEADWALLS & WINGWALLS TO BE REMOVED, TYP.
EXISTING CONCRETE SPILLWAY
EXISTING 84" CMP CULVERT TO BE REPLACED
OUTLET STREAM
MCKINNEY ROAD
DITCH
SILT
GRAPHIC SCALE
NO. DATE REVISION BY
00 10/2016 ORIGINAL ISSUE ATB
JME
New York Office
7 South Church Street Schenectady, New York 12305
Ph: 518 382 1774 Fax: 518 382 1776
www.mcdonaldengineers.com www.primeeng.com
PROJ. ENGR.: ATB
DRAWN BY: BSN
CHECKED BY: JHM
MONTGOMERY COUNTY
CULVERT REPLACEMENT
CONTRACT NO. 3 - TOWN OF AMSTERDAM CULVERT REPLACEMENT
CONTRACT NO. 4 - TOWN OF FLORIDA CULVERT REPLACEMENT
SHEET TITLE:
MCKINNEY ROAD 4B
SITE PLAN
SCALE: AS SHOWN
FILE NO.: 134-1601-250
DATE: OCTOBER 2016
SHEET NO.: B16

Figure 4.

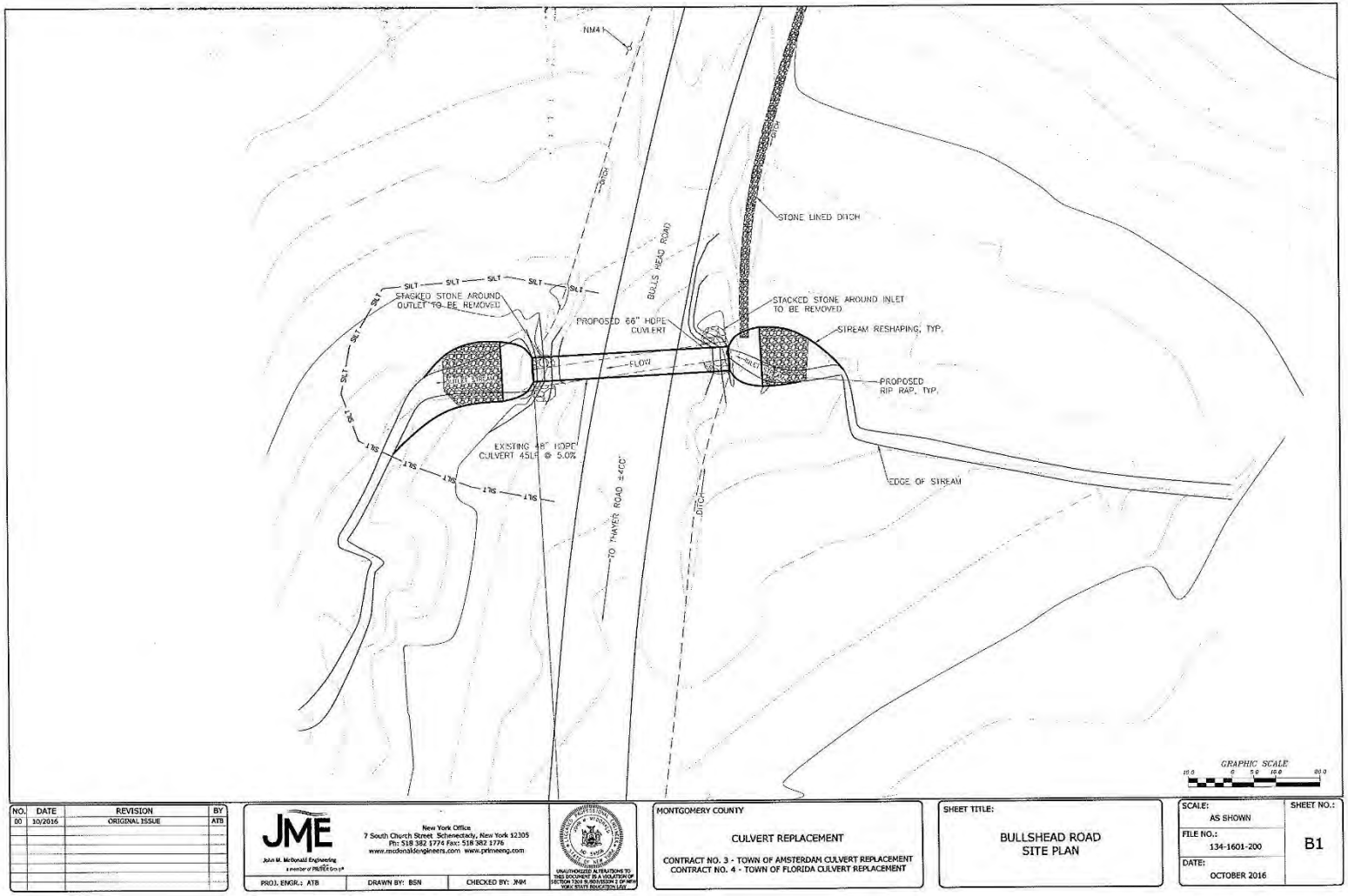
NM4
DITCH
BULLS HEAD ROAD
STONE LINED DITCH
SILT
STACKED STONE AROUND OUTLET TO BE REMOVED
PROPOSED 66" HDPE CULVERT
STACKED STONE AROUND INLET TO BE REMOVED
STREAM RESHAPING, TYP.
FLOW
OUTLET
PROPOSED RIP RAP, TYP.
EXISTING 48" HDPE CULVERT 45LF @ 5.0%
TO THAYER ROAD ±400'
EDGE OF STREAM
GRAPHIC SCALE
NO. DATE REVISION BY
00 10/2016 ORIGINAL ISSUE ATB
JME
John M. McDonald Engineering
New York Office
7 South Church Street Schenectady, New York 12305
Ph: 518 382 1774 Fax: 518 382 1776
www.mcdonaldengineers.com www.primeeng.com
PROJ. ENGR.: ATB
DRAWN BY: BSN
CHECKED BY: JNM
MONTGOMERY COUNTY
CULVERT REPLACEMENT
CONTRACT NO. 3 - TOWN OF AMSTERDAM CULVERT REPLACEMENT
CONTRACT NO. 4 - TOWN OF FLORIDA CULVERT REPLACEMENT
SHEET TITLE:
BULLSHEAD ROAD
SITE PLAN
SCALE: AS SHOWN
FILE NO.: 134-1601-200
DATE: OCTOBER 2016
SHEET NO.: B1

Figure 5.

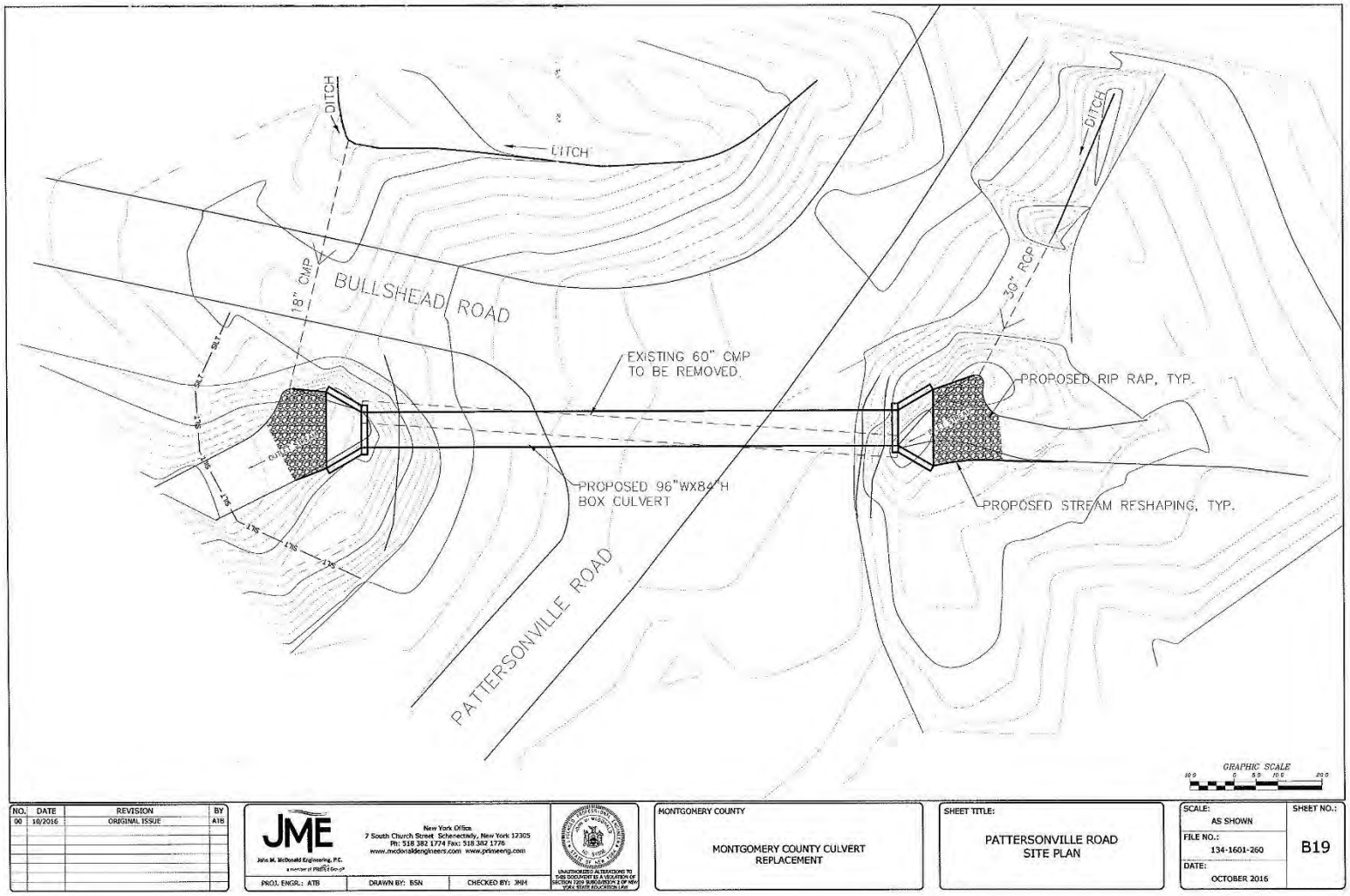
DITCH
DITCH
DITCH
18" CMP
BULLSHEAD ROAD
30" RCP
EXISTING 60" CMP
TO BE REMOVED
PROPOSED RIP RAP, TYP.
PROPOSED 96"WX84"H
BOX CULVERT
PROPOSED STREAM RESHAPING, TYP.
PATTERSONVILLE ROAD
GRAPHIC SCALE
NO. DATE REVISION BY
00 10/2016 ORIGINAL ISSUE ATB
JME
John M. McDonald Engineering, P.C.
New York Office
7 South Church Street Schenectady, New York 12305
Ph: 518 382 1774 Fax: 518 382 1776
www.mcdonaldengineers.com www.primeeng.com
PROJ. ENGR.: ATB
DRAWN BY: BSN
CHECKED BY: JNM
MONTGOMERY COUNTY
MONTGOMERY COUNTY CULVERT
REPLACEMENT
SHEET TITLE:
PATTERSONVILLE ROAD
SITE PLAN
SCALE:
AS SHOWN
FILE NO.:
134-1601-260
DATE:
OCTOBER 2016
SHEET NO.:
B19

Figure 6.

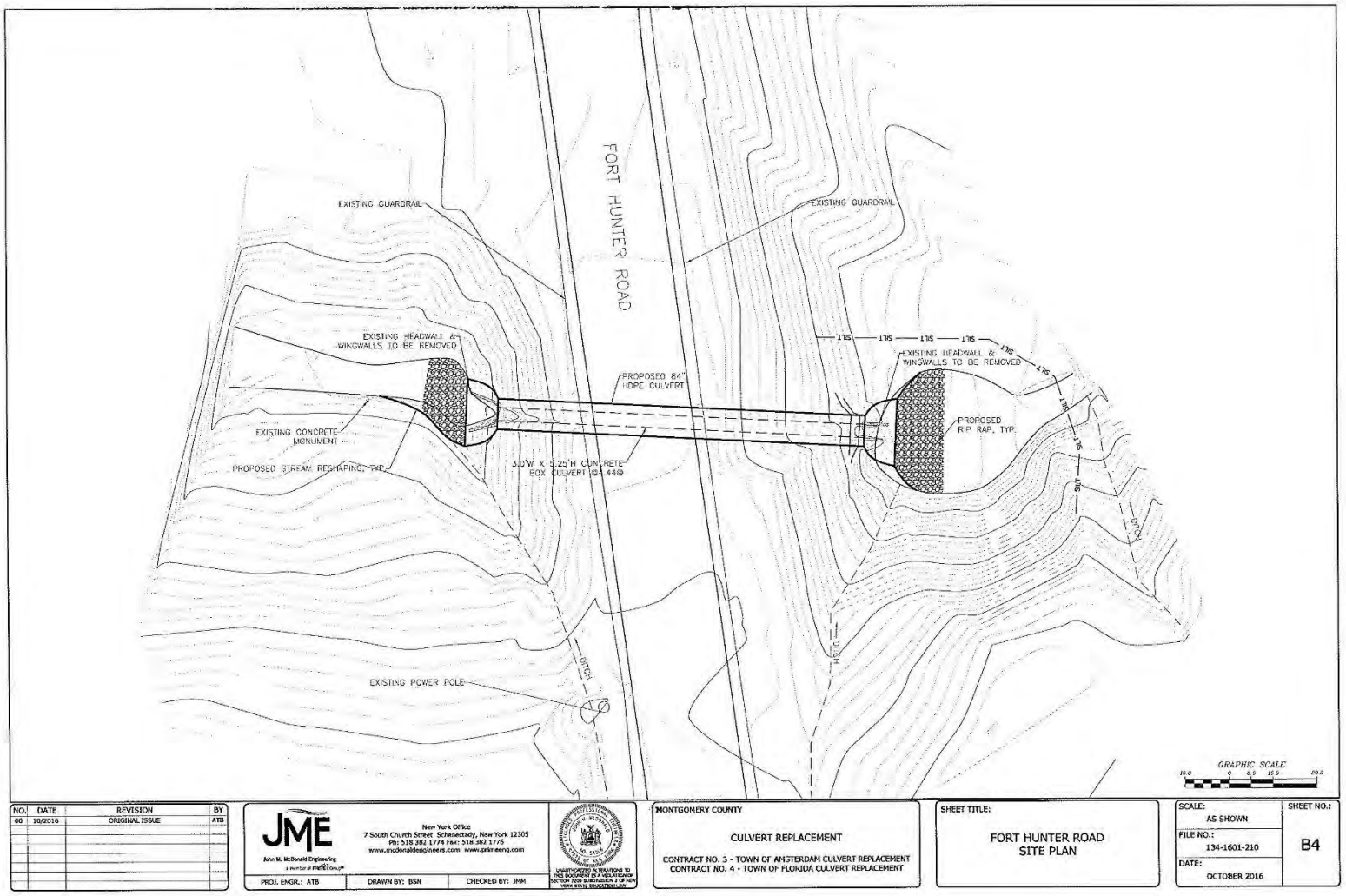
FORT HUNTER ROAD
EXISTING GUARDRAIL
EXISTING GUARDRAIL
EXISTING HEADWALL & WINGWALLS TO BE REMOVED
EXISTING HEADWALL & WINGWALLS TO BE REMOVED
PROPOSED 84" HDPE CULVERT
EXISTING CONCRETE MONUMENT
PROPOSED STREAM RESHAPING, TYP.
3.0'W X 6.25'H CONCRETE BOX CULVERT @ 44@
PROPOSED RIP RAP, TYP.
EXISTING POWER POLE
DITCH
DITCH
GRAPHIC SCALE
NO. DATE REVISION BY
00 10/2016 ORIGINAL ISSUE ATB
JME
John M. McDonald Engineering
New York Office
7 South Church Street Schenectady, New York 12305
Ph: 518 382 1774 Fax: 518 382 1776
www.mcdonaldengineers.com www.prkmeeng.com
PROJ. ENGR.: ATB
DRAWN BY: BSN
CHECKED BY: JMM
MONTGOMERY COUNTY
CULVERT REPLACEMENT
CONTRACT NO. 3 - TOWN OF AMSTERDAM CULVERT REPLACEMENT
CONTRACT NO. 4 - TOWN OF FLORIDA CULVERT REPLACEMENT
SHEET TITLE:
FORT HUNTER ROAD
SITE PLAN
SCALE:
AS SHOWN
FILE NO.:
134-1601-210
DATE:
OCTOBER 2016
SHEET NO.:
B4

Figure 7.

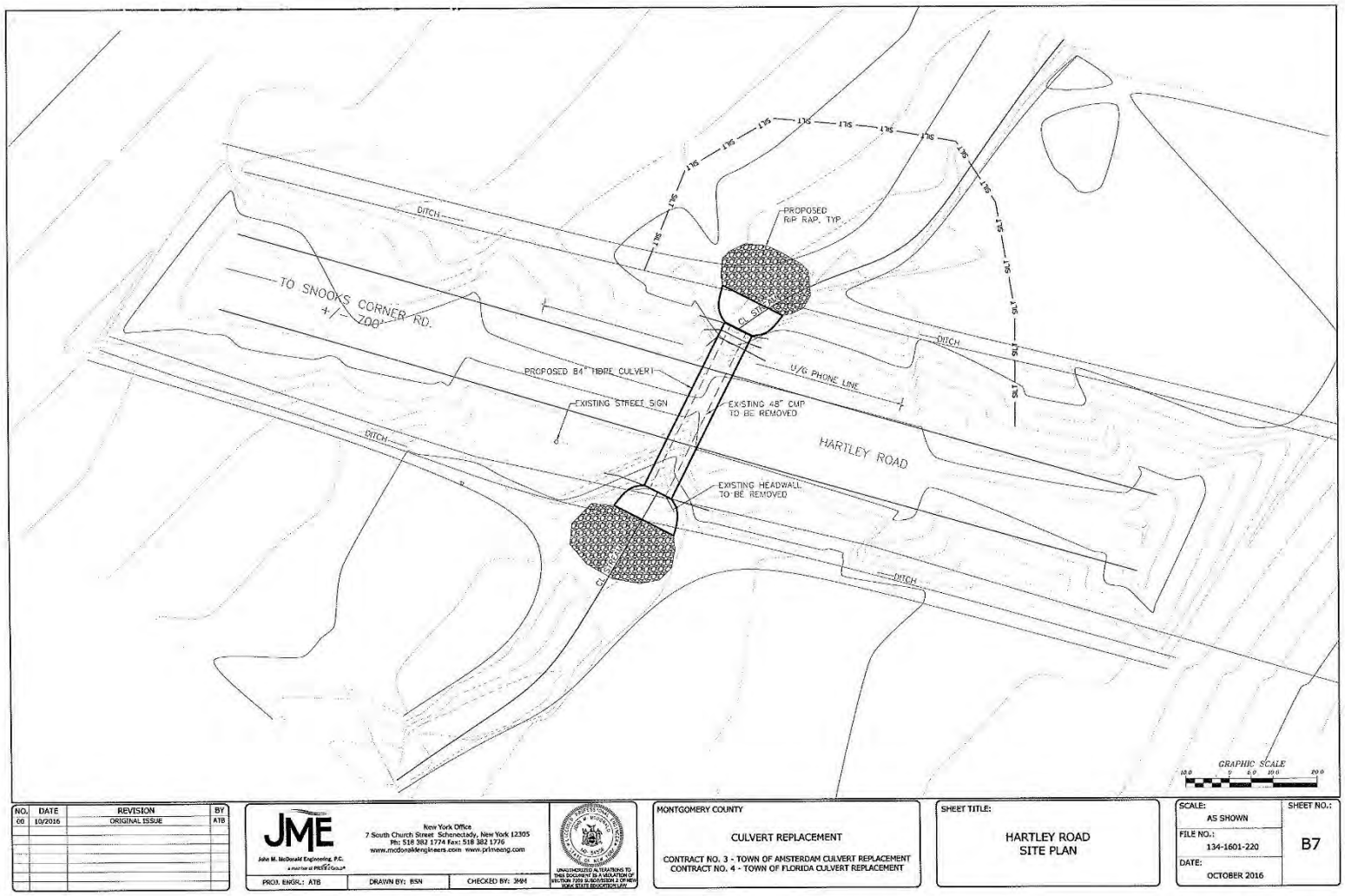
DITCH
TO SNOOKS CORNER RD.
+/- 700'
PROPOSED RIP RAP, TYP.
PROPOSED 84" HDPE CULVERT
EXISTING STREET SIGN
U/G PHONE LINE
EXISTING 48" CMP TO BE REMOVED
HARTLEY ROAD
EXISTING HEADWALL TO BE REMOVED
SILT
GRAPHIC SCALE
NO. DATE REVISION BY
00 10/2016 ORIGINAL ISSUE ATB
JME
John M. McDonald Engineering, P.C.
New York Office
7 South Church Street Schenectady, New York 12305
Ph: 518 382 1774 Fax: 518 382 1776
www.mcdonaldengineers.com www.primeeng.com
PROJ. ENGR.: ATB
DRAWN BY: BSN
CHECKED BY: JMM
MONTGOMERY COUNTY
CULVERT REPLACEMENT
CONTRACT NO. 3 - TOWN OF AMSTERDAM CULVERT REPLACEMENT
CONTRACT NO. 4 - TOWN OF FLORIDA CULVERT REPLACEMENT
SHEET TITLE:
HARTLEY ROAD
SITE PLAN
SCALE:
AS SHOWN
FILE NO.:
134-1601-220
DATE:
OCTOBER 2016
SHEET NO.:
B7

Figure 8.

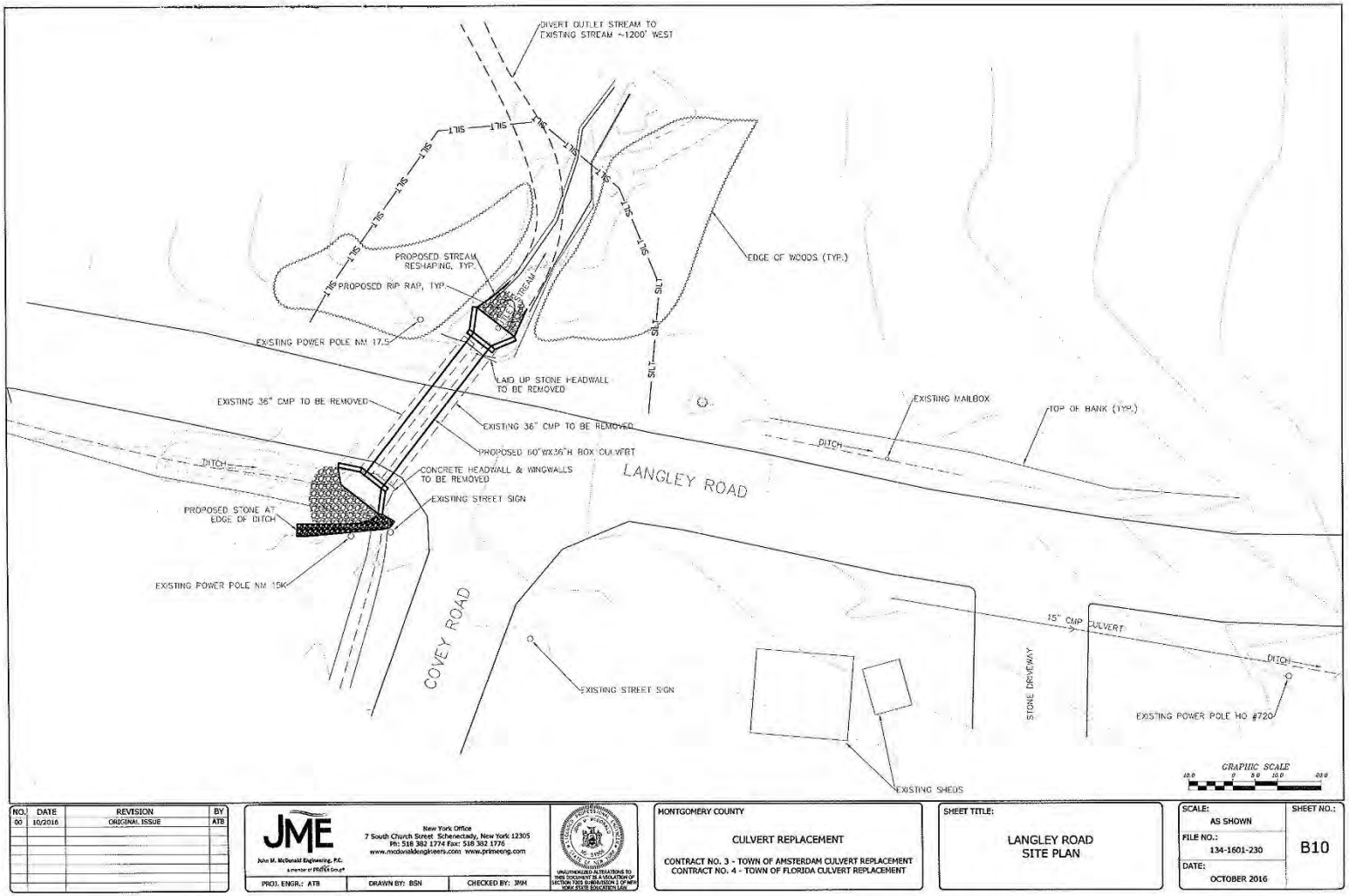
DIVERT OUTLET STREAM TO EXISTING STREAM ~1200' WEST
EDGE OF WOODS (TYP.)
PROPOSED STREAM RESHAPING, TYP.
PROPOSED RIP RAP, TYP.
EXISTING POWER POLE NM 17.5
LAID UP STONE HEADWALL TO BE REMOVED
EXISTING 36" CMP TO BE REMOVED
EXISTING 36" CMP TO BE REMOVED
PROPOSED 60"WX36"H BOX CULVERT
CONCRETE HEADWALL & WINGWALLS TO BE REMOVED
EXISTING STREET SIGN
PROPOSED STONE AT EDGE OF DITCH
EXISTING POWER POLE NM 15K
DITCH
LANGLEY ROAD
COVEY ROAD
EXISTING MAILBOX
TOP OF BANK (TYP.)
15" CMP CULVERT
STONE DRIVEWAY
EXISTING POWER POLE HO #720
EXISTING SHEDS
GRAPHIC SCALE
NO. DATE REVISION BY
00 10/2016 ORIGINAL ISSUE ATB
JME
John M. McDonald Engineering, P.C.
New York Office
7 South Church Street Schenectady, New York 12305
Ph: 518 382 1774 Fax: 518 382 1776
www.mcdonaldengineers.com www.primeeng.com
PROJ. ENGR.: ATB
DRAWN BY: BSN
CHECKED BY: JNM
MONTGOMERY COUNTY
CULVERT REPLACEMENT
CONTRACT NO. 3 - TOWN OF AMSTERDAM CULVERT REPLACEMENT
CONTRACT NO. 4 - TOWN OF FLORIDA CULVERT REPLACEMENT
SHEET TITLE:
LANGLEY ROAD SITE PLAN
SCALE: AS SHOWN
FILE NO.: 134-1601-230
DATE: OCTOBER 2016
SHEET NO.: B10

Figure 9.

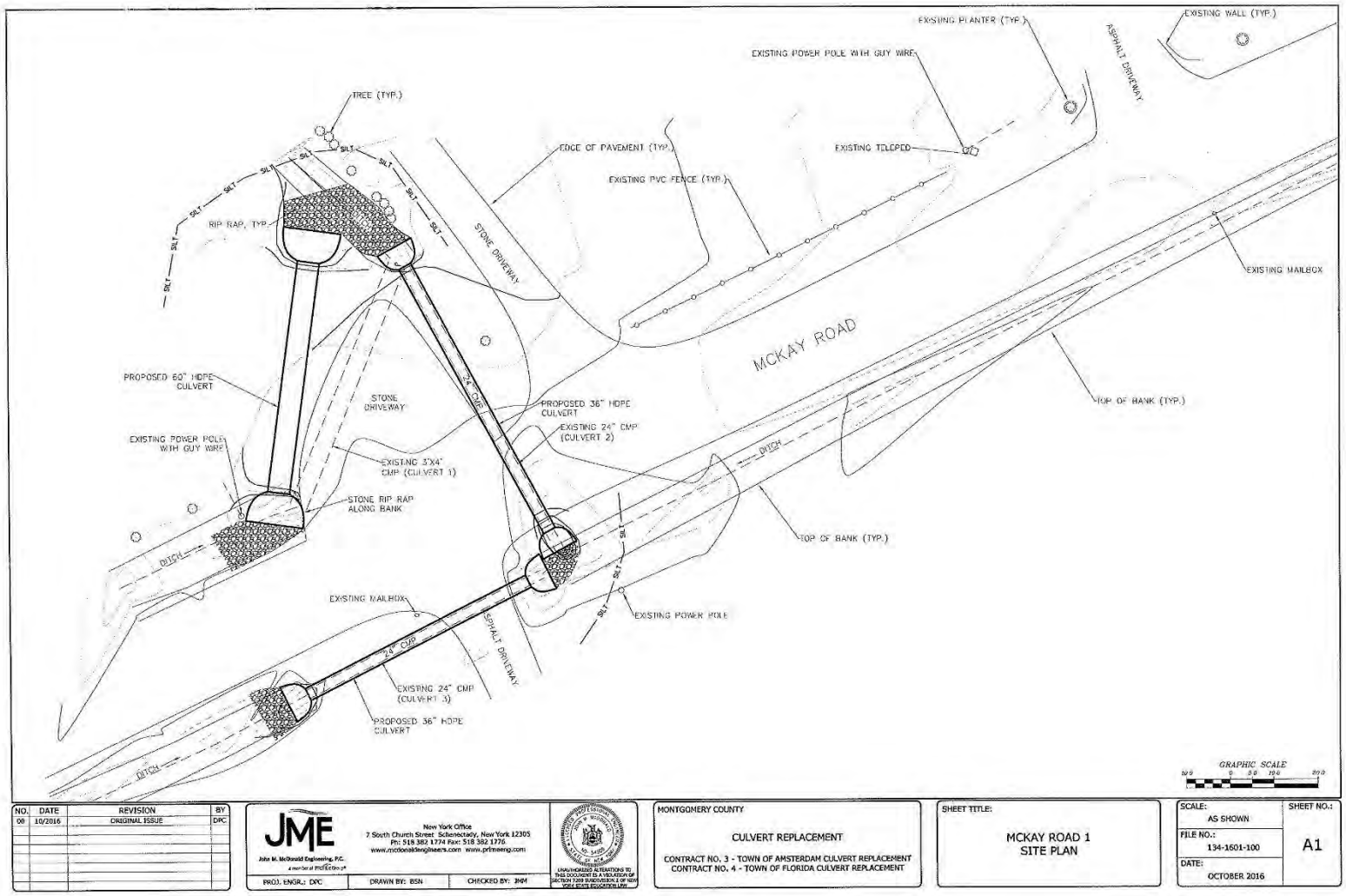
EXISTING PLANTER (TYP.)
EXISTING WALL (TYP.)
EXISTING POWER POLE WITH GUY WIRE
ASPHALT DRIVEWAY
TREE (TYP.)
EDGE OF PAVEMENT (TYP.)
EXISTING TELEPED
EXISTING PVC FENCE (TYP.)
RIP RAP, TYP.
STONE DRIVEWAY
EXISTING MAILBOX
MCKAY ROAD
PROPOSED 60" HDPE CULVERT
STONE DRIVEWAY
24" CMP
PROPOSED 36" HDPE CULVERT
EXISTING 24" CMP (CULVERT 2)
TOP OF BANK (TYP.)
EXISTING POWER POLE WITH GUY WIRE
EXISTING 3'X4' CMP (CULVERT 1)
DITCH
STONE RIP RAP ALONG BANK
TOP OF BANK (TYP.)
DITCH
EXISTING MAILBOX
EXISTING POWER POLE
ASPHALT DRIVEWAY
24" CMP
EXISTING 24" CMP (CULVERT 3)
PROPOSED 36" HDPE CULVERT
DITCH
GRAPHIC SCALE
NO. DATE REVISION BY
00 10/2016 ORIGINAL ISSUE DPC
JME
John M. McDonald Engineering, P.C.
New York Office
7 South Church Street Schenectady, New York 12305
Ph: 518 382 1774 Fax: 518 382 1776
www.mcdonaldengineers.com www.primeeng.com
PROJ. ENGR.: DPC
DRAWN BY: BSN
CHECKED BY: JMM
MONTGOMERY COUNTY
CULVERT REPLACEMENT
CONTRACT NO. 3 - TOWN OF AMSTERDAM CULVERT REPLACEMENT
CONTRACT NO. 4 - TOWN OF FLORIDA CULVERT REPLACEMENT
SHEET TITLE:
MCKAY ROAD 1
SITE PLAN
SCALE: AS SHOWN
SHEET NO.: A1
FILE NO.: 134-1601-100
DATE: OCTOBER 2016

Figure 10.

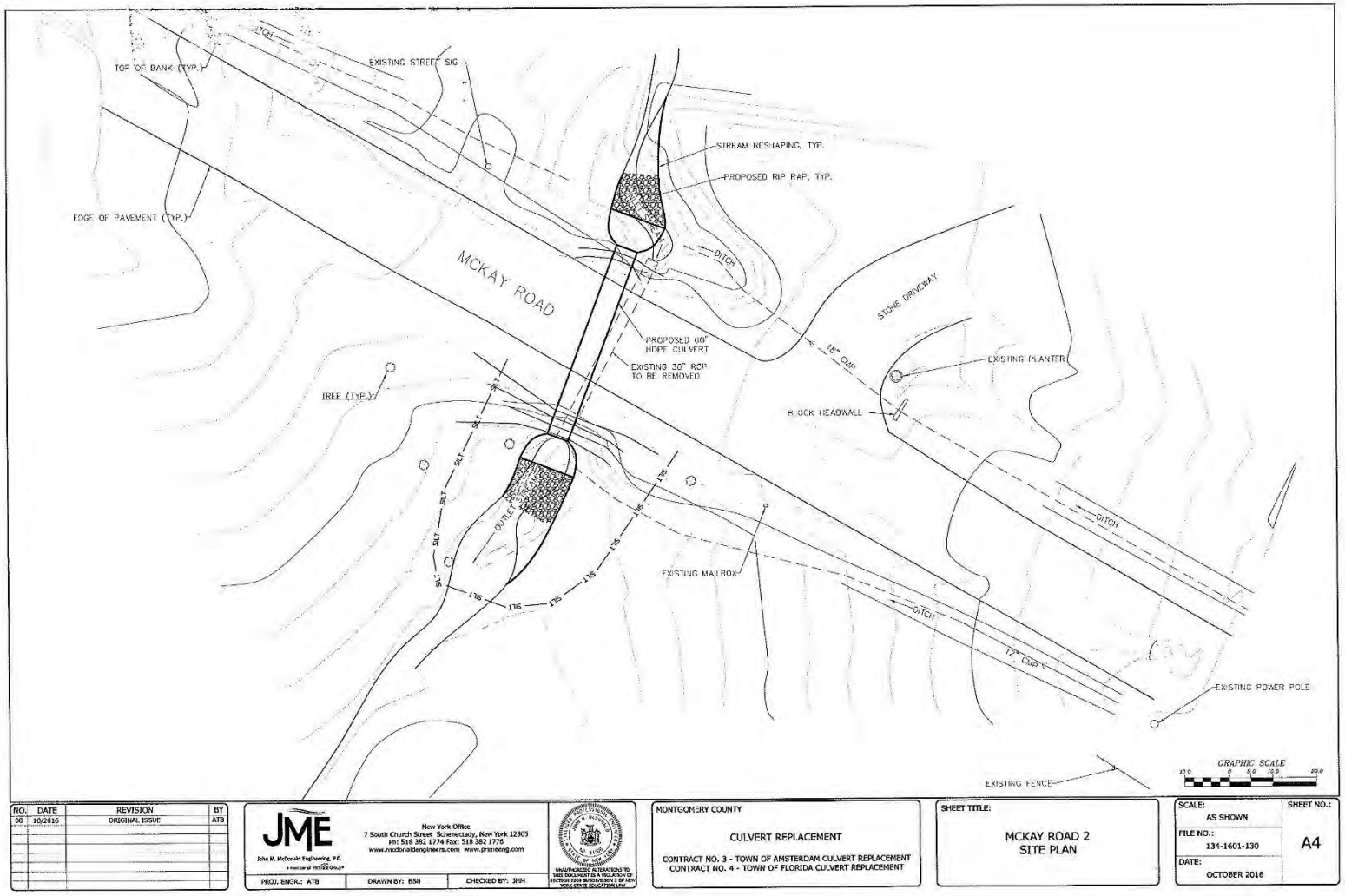
TOP OF BANK (TYP.)
EXISTING STREET SIG
STREAM RESHAPING, TYP.
PROPOSED RIP RAP, TYP.
EDGE OF PAVEMENT (TYP.)
MCKAY ROAD
DITCH
STONE DRIVEWAY
PROPOSED 60" HDPE CULVERT
EXISTING 30" RCP TO BE REMOVED
18" CMP
EXISTING PLANTER
TREE (TYP.)
BLOCK HEADWALL
OUTLET PROTECTION
EXISTING MAILBOX
DITCH
DITCH
12" CMP
EXISTING POWER POLE
EXISTING FENCE
GRAPHIC SCALE
NO. DATE REVISION BY
00 10/2016 ORIGINAL ISSUE ATB
JME
John M. McDonald Engineering, P.C.
New York Office
7 South Church Street, Schenectady, New York 12305
Ph: 518 382 1774 Fax: 518 382 1776
www.mcdonaldengineers.com www.primeeng.com
PROJ. ENGR.: ATB
DRAWN BY: BSH
CHECKED BY: JNM
MONTGOMERY COUNTY
CULVERT REPLACEMENT
CONTRACT NO. 3 - TOWN OF AMSTERDAM CULVERT REPLACEMENT
CONTRACT NO. 4 - TOWN OF FLORIDA CULVERT REPLACEMENT
SHEET TITLE:
MCKAY ROAD 2
SITE PLAN
SCALE: AS SHOWN
FILE NO.: 134-1601-130
DATE: OCTOBER 2016
SHEET NO.: A4

Figure 11.

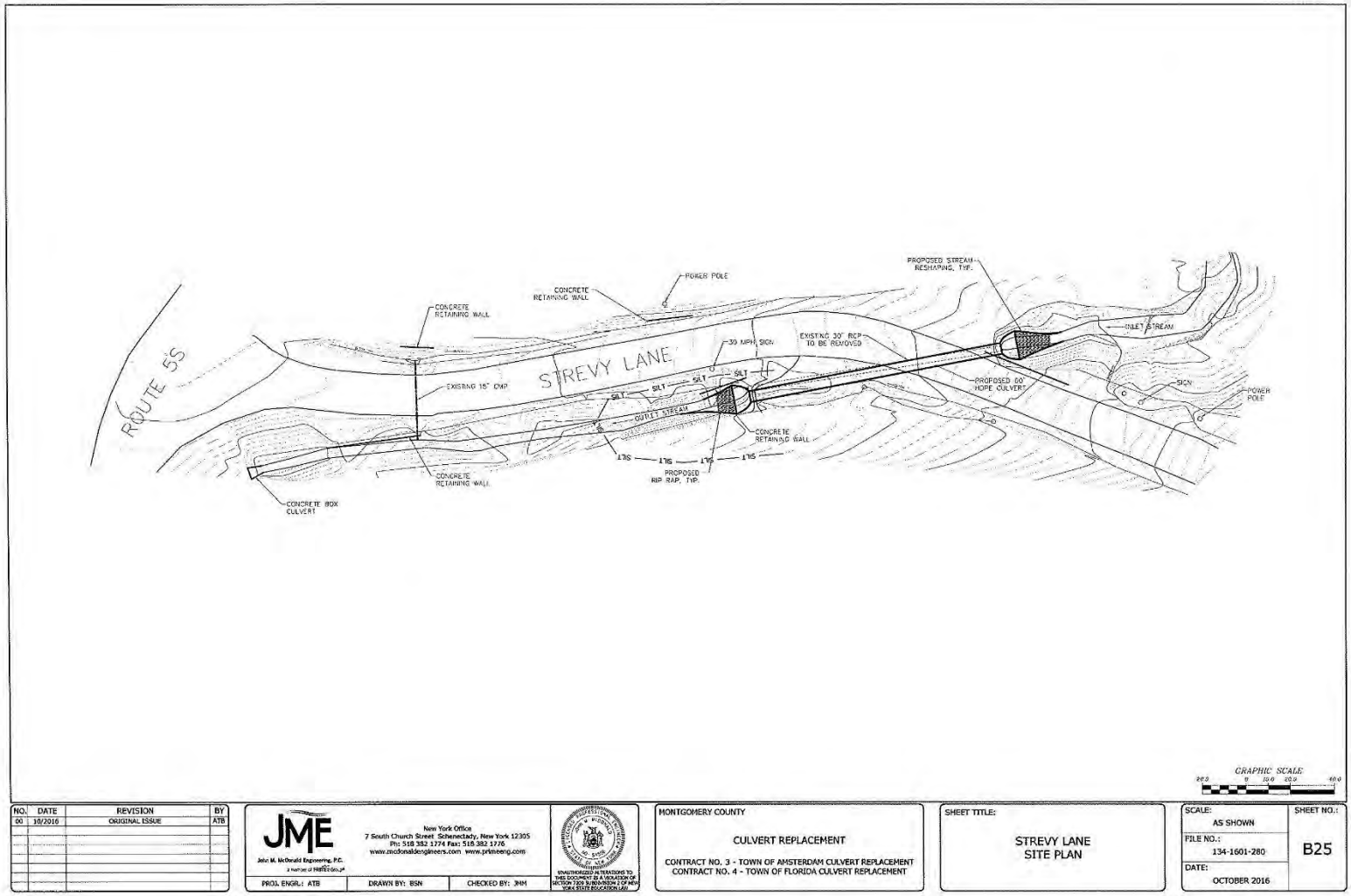
ROUTE 5S
STREVY LANE
CONCRETE RETAINING WALL
POWER POLE
PROPOSED STREAM RESHAPING, TYP.
30 MPH SIGN
EXISTING 30" RCP TO BE REMOVED
INLET STREAM
EXISTING 15" CMP
PROPOSED 60" HDPE CULVERT
SIGN
POWER POLE
SILT
OUTLET STREAM
CONCRETE RETAINING WALL
PROPOSED RIP RAP, TYP.
CONCRETE BOX CULVERT
GRAPHIC SCALE
NO. DATE REVISION BY
00 10/2016 ORIGINAL ISSUE ATB
JME
John M. McDonald Engineering, P.C.
New York Office
7 South Church Street Schenectady, New York 12305
Ph: 518 382 1774 Fax: 518 382 1776
www.mcdonaldengineers.com www.primeeng.com
PROJ. ENGR.: ATB
DRAWN BY: BSN
CHECKED BY: JMM
MONTGOMERY COUNTY
CULVERT REPLACEMENT
CONTRACT NO. 3 - TOWN OF AMSTERDAM CULVERT REPLACEMENT
CONTRACT NO. 4 - TOWN OF FLORIDA CULVERT REPLACEMENT
SHEET TITLE:
STREVY LANE
SITE PLAN
SCALE:
AS SHOWN
FILE NO.:
134-1601-280
DATE:
OCTOBER 2016
SHEET NO.:
B25

Figure 12.

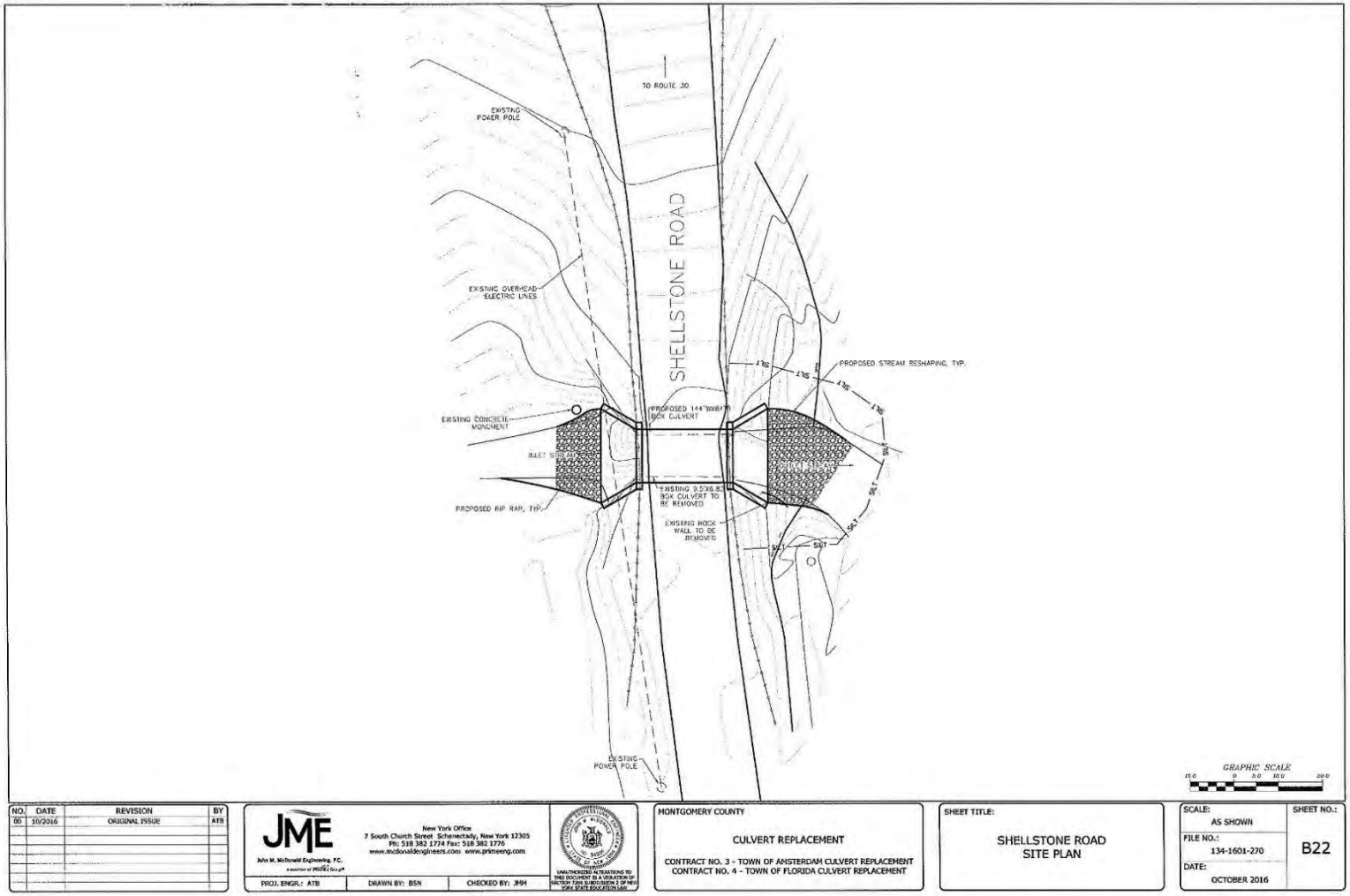
TO ROUTE 30
EXISTING POWER POLE
SHELLSTONE ROAD
EXISTING OVERHEAD ELECTRIC LINES
PROPOSED STREAM RESHAPING, TYP.
EXISTING CONCRETE MONUMENT
PROPOSED 144"W(8'H) BOX CULVERT
INLET STREAM
EXISTING 9.5'X6.5' BOX CULVERT TO BE REMOVED
PROPOSED RIP RAP, TYP.
EXISTING ROCK WALL TO BE REMOVED
EXISTING POWER POLE
GRAPHIC SCALE
NO. DATE REVISION BY
00 10/2016 ORIGINAL ISSUE ATB
JME
John M. McDonald Engineering, P.C.
New York Office
7 South Church Street Schenectady, New York 12305
Ph: 518 382 1774 Fax: 518 382 1776
www.mcdonaldengineers.com www.primeeng.com
PROJ. ENGR.: ATB
DRAWN BY: BSN
CHECKED BY: JMM
MONTGOMERY COUNTY
CULVERT REPLACEMENT
CONTRACT NO. 3 - TOWN OF AMSTERDAM CULVERT REPLACEMENT
CONTRACT NO. 4 - TOWN OF FLORIDA CULVERT REPLACEMENT
SHEET TITLE:
SHELLSTONE ROAD
SITE PLAN
SCALE:
AS SHOWN
FILE NO.:
134-1601-270
DATE:
OCTOBER 2016
SHEET NO.:
B22

Figure 13.

APPENDIX D
TRIBAL CORRESPONDENCE

Affidavit of Mailing

STATE OF NEW YORK)
: SS. :
COUNTY OF ALBANY)

MARY BARTHELME, being duly sworn, deposes and says:

1. I am over the age of eighteen years.
2. On April 26, 2017, I mailed true and correct copies of the annexed Montgomery County Culverts Tribal Consultations dated April 26, 2017 by placing the same in first class post-paid envelopes addressed: SEE ATTACHED LIST.
3. On said day, I deposited said envelopes in a mailbox at 99 Washington Avenue, Albany, New York 12210.

Mary Barthelme

Sworn to before me this
1st day of May 2017

Notary Public

Stephanie Maier
Notary Public, State of New York
Qualified in Rensselaer County
No. 01MA6337406
Commission Expires February 22, 2020

Ron LaFrance, Jr.; Paul Thompson;
and Beverly Cook, Chiefs
St. Regis Mohawk Tribe
412 State Route 37
Akwesasne, NY 13655

Mohawk Nation Council of Chiefs
Of Haudenosaunee Six Nations
Confederacy
Akwesasne Territory Box 336
Via Rooseveltown, NY 13683-0366

Governor's Office of
Storm Recovery

ANDREW M. CUOMO
Governor

LISA BOVA-HIATT
Executive Director

April 26, 2017

Mohawk Nation Council of Chiefs
Of Haudenosaunee Six Nations Confederacy
Akwesasne Territory Box 336
Via Rooseveltown, NY 13683-0366

Re: Section 106 Compliance for the Montgomery County Culverts Enlargement Project, Montgomery County, New York

Dear Mohawk Nation Council of Chiefs:

Pursuant to the Disaster Relief Appropriations Act, 2013 (Public Law 113-2) and the Housing and Community Development Act (42 U.S.C. § 5301 et seq.), the Governor's Office of Storm Recovery (GOSR), an office of New York State Homes and Community Renewal's Housing Trust Fund Corporation as a recipient of Community Development Block Grant – Disaster Recovery ("CDBG-DR") funds from the United States Department of Housing and Urban Development ("HUD"), is serving as the entity responsible for compliance with the HUD environmental review procedures set forth in 24 CFR Part 58. GOSR is acting on behalf of HUD in providing the enclosed project information and inviting this discussion with your Nation to respond with any concerns or comments.

GOSR processes environmental reviews for projects funded with HUD CDBG-DR on a case-by-case basis. In accordance with Section 101(d)(6)(B) of the National Historic Preservation Act (NHPA) of 1966, as amended (16 U.S.C. 470a), and its implementing regulations, 36 Code of Federal Regulations (CFR) Part 800, this letter serves as notification of the proposed action. This consultation is being sent to the Mohawk Nation and the Saint Regis Mohawk Tribe.

Proposed Project Description and Area of Potential Effects: GOSR proposes to provide funding to the Towns of Florida and Amsterdam, Montgomery County, New York to enlarge existing culverts at eleven road crossings throughout the Towns (Project). During Hurricane Irene and Tropical Storm Lee, the existing culvert crossings proved insufficient to handle major flooding and were overwhelmed by flood waters. Flooding of nearby roads and homes occurred in many areas throughout both towns. The construction component of the Project will alleviate the risk of flooding in each of the locations during future storm events.

The Project includes a typical culvert upgrade of various sizes to a box concrete culvert or high density polyethylene pipe (HDPE), with stone riprap aprons and channel rehabilitation that will be limited to the channel and extend 50 feet from the headwalls at both the upstream and downstream ends.

The overall Project requires: vegetation removal; removal of street surfaces including curbs and walks in some places; excavations; cutting; filling and grading; installation of pipes and culverts; construction of soil berms; placement of rip-rap or similar armoring; and post-construction restoration of soil surfaces and the like.

The smaller culverts would be made of HDPE and the larger culverts would be four-sided precast concrete box culverts. At several locations the Project would include removal of existing headwalls, stream reshaping and installation of rip-rap at the inlet and outlet of the proposed culvert, and alignment correction. The culvert bottoms would have embedment (i.e., be filled to an appropriate depth) of natural streambed material. It is anticipated that construction would involve substantial earthwork, and temporary or permanent easements may be required. Construction would occur within the existing rights-of-way of each road to the extent feasible.

The area of potential effects (APE) for each culvert enlargement would include all areas that will be affected by ground disturbance. In addition to the locations immediately effected by the enlargement of the 11 culverts, the APE also includes a 30 foot buffer zone around the work area. Consideration of the impact on cultural resources of the Project includes all potential cultural resources within the APE.

This construction will occur at the following eleven locations (Figs. 1 and 2) and is described for each culvert in Table 1

Table 1
Culvert Locations and Construction Details

Culvert Identification	Location	Construction Details
Culvert No. 4A	McKinney Road (1,600 feet north of Lost Valley Road) Town of Florida, New York	The existing 72-inch corrugated metal pipe (CMP) culvert with a concrete mid-section conveying an unnamed stream beneath McKinney Road would be removed, realigned and replaced with an 84-inch HDPE culvert. The bottom of the proposed new culvert would have a 17-inch embedment (i.e., be filled to a depth of 17 inches) of natural streambed material. The existing stone headwall at the inlet of the existing culvert also would be removed. The Project at this site would include stream reshaping, and rip-rap would be installed at the inlet and outlet of the proposed culvert (Fig. 3).
Culvert No. 4B	McKinney Road (3,200 feet north of Peck Road) Town of Florida, New York	The existing 84-inch CMP culvert conveying an unnamed stream beneath McKinney Road would be removed, realigned and replaced with a 144-inch by 144-inch box culvert. The bottom of the proposed new culvert would have a 29-inch embedment of natural streambed material. The

Table 1
Culvert Locations and Construction Details

Culvert Identification	Location	Construction Details
		existing concrete headwall and wing walls at the inlet of the existing culvert, and the existing spillway also would be removed. The Project at this site would include stream reshaping, and rip-rap would be installed at the inlet and outlet of the proposed culvert (Fig. 4).
Culvert No. 5B	Bulls Head Road (450 feet north of Thayer Road) Town of Florida, New York	The existing 48-inch HDPE culvert conveying an unnamed stream beneath Bullshead Road would be removed, realigned and replaced with a 66-inch HDPE culvert with a proposed 13-inch embedment of natural streambed material. Stacked stone at the inlet and outlet of the existing culvert also would be removed. The Project at this site would include stream reshaping, and rip-rap would be installed at the inlet and outlet of the proposed culvert. The drainage ditch along the east side of the road would be lined with stone (Fig. 5).
Culvert No. 6A	Pattersonville Road (100 feet south of Bulls Head Road) Town of Florida, New York	The existing 60-inch CMP culvert conveying an unnamed stream beneath Pattersonville Road at the east side of the intersection with Bullshead Road would be removed, realigned and replaced with a 96-inch by 84-inch box culvert. The bottom of the proposed new culvert would have a of 17-inch embedment of natural streambed material. The Project at this site would include stream reshaping, and rip-rap would be installed at the inlet and outlet of the proposed culvert (Fig. 6).
Fort Hunter Road	560 feet southeast of Morris Road Town of Florida, New York	The existing 3-foot by 5.25-foot concrete box culvert conveying an unnamed stream beneath Fort Hunter Road would be removed and replaced with an 84-inch HDPE culvert. The bottom of the proposed new culvert would have a 17-inch embedment of natural streambed material. The existing headwall and wing walls at the inlet and outlet of the existing culvert also would be removed. The Project at this site would include stream reshaping, and rip-rap would be

Table 1
Culvert Locations and Construction Details

Culvert Identification	Location	Construction Details
		installed at the inlet and outlet of the proposed culvert (Fig. 7).
Hartley Road	900 feet southeast of Snooks Corners Road Town of Florida, New York	The existing 48-inch CMP culvert conveying an unnamed stream beneath Hartley Road would be removed and replaced with an 84-inch HDPE culvert. The bottom of the proposed new culvert would have a 17-inch embedment of natural streambed material. The existing headwall of the existing culvert also would be removed. Rip-rap would be installed at the inlet and outlet of the proposed culvert (Fig. 8).
Langley Road	700 feet southwest of Thayer Road Town of Florida, New York	The existing 36-inch CMP culvert crossing Langley Road adjacent to the intersection with Covey Road would be removed and replaced with a 60-inch by 36-inch box culvert. The bottom of the proposed new culvert would have a 17-inch embedment of natural streambed material. The existing concrete headwall and wing walls at the inlet and stone headwall at the outlet of the existing culvert also would be removed. The Project at this site would include stream reshaping, and rip-rap would be installed at the inlet and outlet of the proposed culvert. Stone would be installed at the ditch at the inlet of the proposed culvert, and the outlet stream would be diverted to the existing stream, approximately 1,200 feet to the west (Fig. 9).
McKay Road No. 1	600 feet south of McDonald Drive Town of Amsterdam, New York	The three existing CMP culverts would be replaced by larger HDPE culverts. Rip-rap would be installed at the ends of each culvert. The 24-inch culvert extending along the stone driveway to the west of McKay Road and extending to the ditch on the east side of the road would be replaced with a 36-inch culvert and would include a 7-inch embedment of natural streambed material. The 3-foot by 4-foot culvert in the same area that extends to the ditch on the west side of the road would be removed, realigned, and replaced by a 60-inch culvert with

Table 1
Culvert Locations and Construction Details

Culvert Identification	Location	Construction Details
		a 12-inch embedment of natural streambed material. The 24-inch culvert, carrying the ditch along the east side of the road beneath an asphalt drive, would be replaced by a 36-inch culvert with a 7-inch embedment of natural streambed material (Fig. 10).
McKay Road No. 2	2,000 feet south of McDonald Drive Town of Amsterdam, New York	The existing 30-inch reinforced concrete pipe that conveys Fitzpatrick Creek under McKay Road would be removed, realigned, and replaced by a 60-inch HDPE culvert with a 12-inch embedment of natural streambed material. The Project at this site would include stream reshaping, and rip-rap would be installed at each end of the culvert (Fig. 11).
Strevy Lane	1,100 feet northwest of intersection with Fort Hunter Road Town of Florida, New York	The existing 30-inch reinforced concrete pipe that conveys an unnamed stream under Strevy Lane near its intersection with State Route 30 would be removed, realigned, and replaced with a 60-inch HDPE culvert. The bottom of the proposed new culvert would be lined with natural streambed material. The Project at this site would include stream reshaping, and rip-rap would be installed at the inlet and outlet of the proposed culvert (Fig. 12).
Shellstone Road	200 feet southwest of Route 30/Sulphur Springs Road Town of Florida, New York	The existing 9.5-foot by 6.83-foot concrete box culvert conveying an unnamed stream beneath Shellstone Road near its intersection with State Route 5S would be removed and replaced with a 144-inch by 84-inch box culvert. The bottom of the proposed new culvert would have a 17-inch embedment of natural streambed material. The Project at this site would include stream reshaping, and rip-rap would be installed at the inlet and outlet of the proposed culvert (Fig. 13).

Assessment of Cultural Resources Sensitivity: The assessment of effects on cultural resources resulting from the enlargement of 11 culverts in the towns of Florida and Amsterdam, Montgomery County, New York is based primarily on the presence of documented cultural resources in or near the APE according to the New York State Cultural Resource Information

System (NY-CRIS). The potential cultural resources sensitivity of each culvert location and the potential Project effect on each is described in Table 2.

Table 2
Culvert-Specific Cultural Resources Sensitivity and Potential Project Effects

Culvert Identification	Potential Cultural Resources Sensitivity	Potential Project Effect
Culvert No. 4A	This culvert is not in an archaeologically sensitive area or in the immediate vicinity of any historic structures according to NY-CRIS. However, an archaeologically sensitive area is located approximately 185 feet to the southeast of the APE suggesting the location may be categorized as having high archaeological sensitivity.	Due to disturbance caused by previous culvert construction within the APE it is unlikely that the proposed culvert improvements will impact any cultural resources.
Culvert No. 4B	This culvert is within an archaeologically sensitive area according to NY-CRIS.	Due to disturbance caused by previous culvert construction within the APE it is unlikely that the proposed culvert improvements will impact any cultural resources.
Culvert No. 5B	This culvert is not within an archaeologically sensitive area and no historic structures are in the immediate vicinity according to NY-CRIS.	The Project is unlikely to affect NRHP-eligible resources at this location.
Culvert No. 6A	This culvert is not within an archaeologically sensitive area and no historic structures are in the immediate vicinity according to NY-CRIS.	The Project is unlikely to affect NRHP-eligible resources at this location.
Fort Hunter Road	This culvert is within an archaeologically sensitive area according to NY-CRIS.	Due to disturbance caused by previous culvert construction within the APE it is unlikely that the proposed culvert improvements will impact any cultural resources.
Hartley Road	This culvert is within an archaeologically sensitive area according to NY-CRIS.	Due to disturbance caused by previous culvert construction within the APE it is unlikely that the

Table 2
Culvert-Specific Cultural Resources Sensitivity and Potential Project Effects

Culvert Identification	Potential Cultural Resources Sensitivity	Potential Project Effect
		proposed culvert improvements will impact any cultural resources.
Langley Road	This culvert is not within an archaeologically sensitive area and no historic structures are in the immediate vicinity according to NY-CRIS. However, the proposed APE is approximately 400 feet west of Terwilleger Creek and the APE's proximity to a drainage increases its potential to be archaeologically sensitive.	Due to disturbance caused by previous culvert construction within the APE it is unlikely that the proposed culvert improvements will impact any cultural resources.
McKay Road No. 1	This culvert is not within an archaeologically sensitive area and no historic structures are in the immediate vicinity according to NY-CRIS. However, the proposed APE is approximately 195 feet west of Fitzpatrick Creek and the APE's proximity to a drainage increases its potential to be archaeologically sensitive.	Due to disturbance caused by previous culvert construction within the APE it is unlikely that the proposed culvert improvements will impact any cultural resources.
McKay Road No. 2	This culvert is not within an archaeologically sensitive area and no historic structures are in the immediate vicinity according to NY-CRIS. However, the proposed APE is approximately 90 feet west of Fitzpatrick Creek and 500 feet northeast of an archaeologically sensitive area according to NY-CRIS. The APE's proximity to a drainage increases its potential to be archaeologically sensitive.	Due to disturbance caused by previous culvert construction within the APE it is unlikely that the proposed culvert improvements will impact any cultural resources.
Strevey Lane	This culvert is within an archaeologically sensitive area according to NY-CRIS. In addition, the proposed APE is approximately 700 feet west of an archaeologically surveyed area (16SR00840) which identified both precontact archaeological material and historic architecture (Newkirk-Reese Farm outbuildings). The proposed APE is also	Due to disturbance caused by previous culvert construction within the APE it is unlikely that the proposed culvert improvements will impact any cultural resources.

Table 2
Culvert-Specific Cultural Resources Sensitivity and Potential Project Effects

Culvert Identification	Potential Cultural Resources Sensitivity	Potential Project Effect
	approximately 900 feet east of Schoharie Creek. This area may be categorized as of high potential archaeological sensitivity.	
Shellstone Road	This culvert is not within an archaeologically sensitive area and no historic structures are in the immediate vicinity according to NY-CRIS. However, the proposed APE is located on a tributary of Chuctanunda Creek. This area may be categorized as of high potential archaeological sensitivity.	Due to disturbance caused by previous culvert construction within the APE it is unlikely that the proposed culvert improvements will impact any cultural resources.

1/NRHP = National Register of Historic Places

With this letter, GOSR respectfully submits for your review the attached documentation for the proposed project described herein. GOSR initiated consultation with the New York State Historic Preservation Office and no comments have been received to date. If the Area of Potential Effect encompasses historic properties of religious or cultural significance to your Nation, please respond within 30 days or sooner. Additionally, please indicate if there are other sources of information or other parties, Nations, Tribes, or members of the public you believe should be included in the consultation process. Please respond by email or in writing to the address listed below.

Alicia Shultz
Bureau of Environmental Review and Assessment
Governor's Office of Storm Recovery
New York State Homes & Community Renewal
38-40 State St.,408N, Hampton Plaza
Albany, NY 12207

I am available to answer any questions that you may have regarding this action. If you have any questions, please feel free to contact me at (518) 474-0647 or via email at Alicia.Shultz@nyshcr.org.

Sincerely,

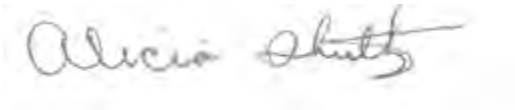

Alicia Shultz
Senior Environmental Scientist
Bureau of Environmental Review and Assessment
Governor's Office of Storm Recovery

Enclosures:
Project Location Maps
Project Engineering Design Plans

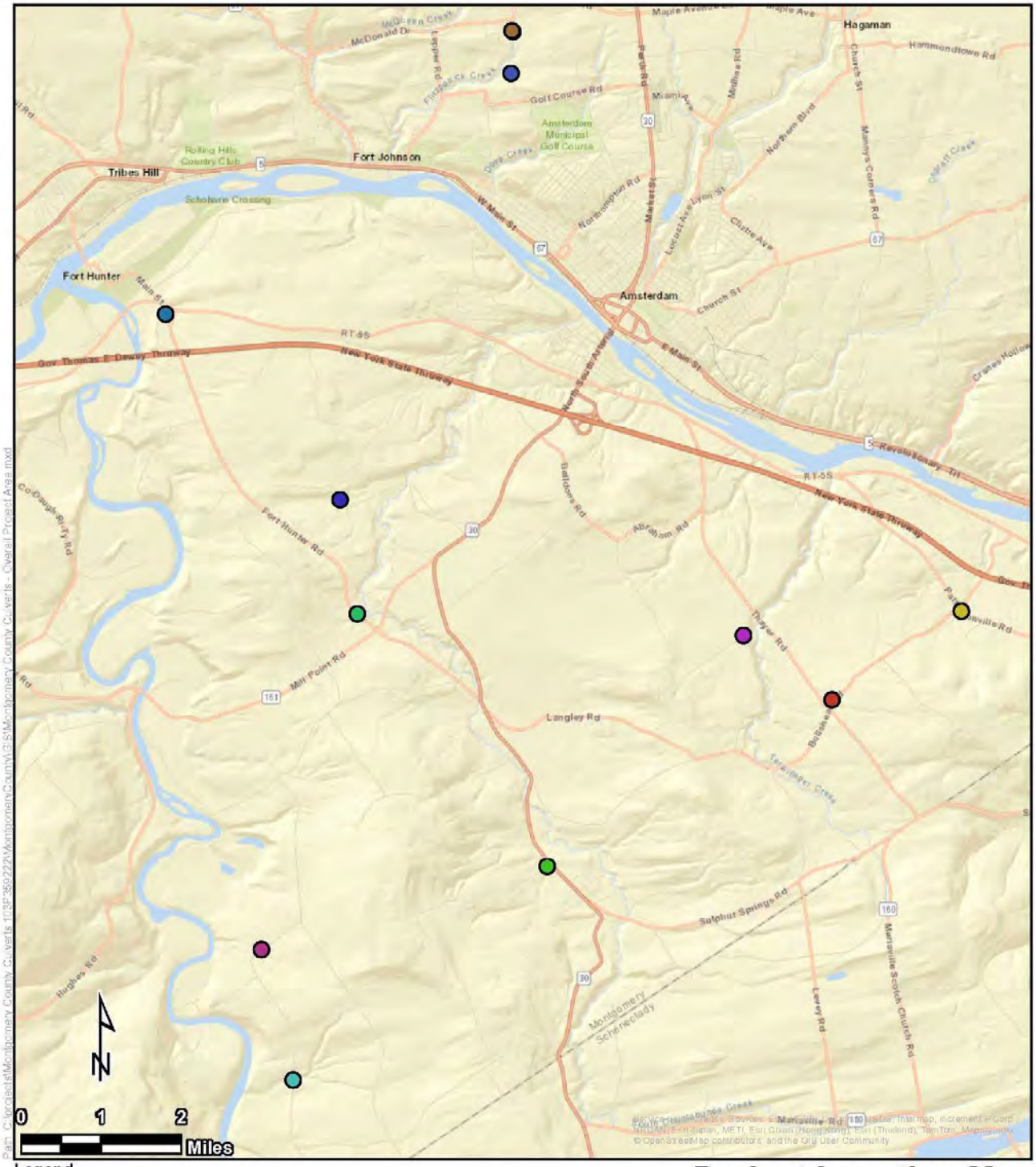

Legend

Culvert Locations

- Bullshead Road
- Fort Hunter Road
- Hartley Road
- Langley Road
- McKay Road 1
- McKay Road 2
- McKinney Road 4A
- McKinney Road 4B
- Pattersonville Road
- Shellstone Road
- Strevy Lane

Tetra Tech, Inc

Project Location Map

Montgomery County Culverts
Bullshead Road, Fort Hunter Road, Hartley Road,
Langley Road, McKay Road, McKinney Road,
Pattersonville Road, Shellstone Road, and Strevy Lane
Montgomery County, New York

Figure 1

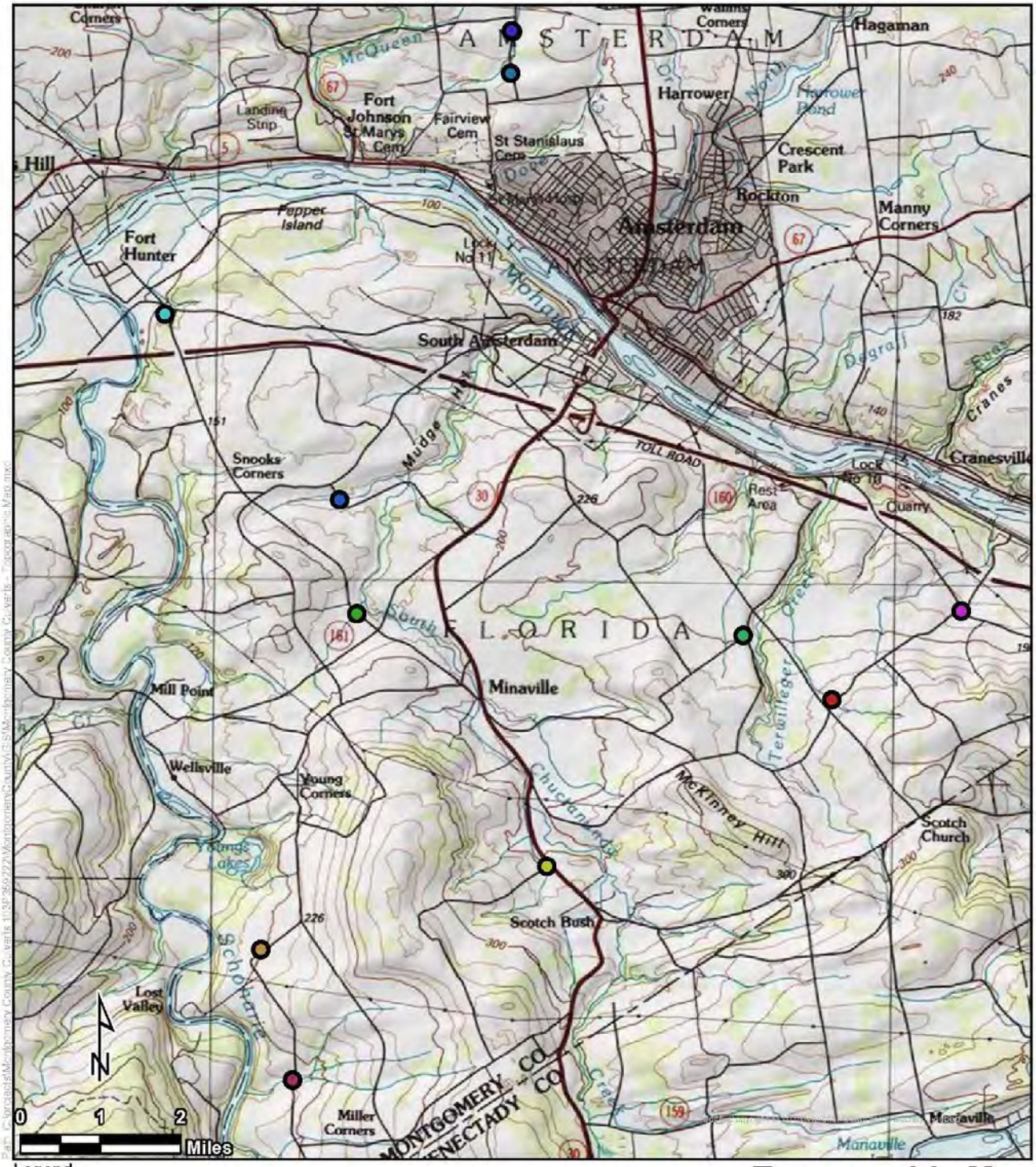

Legend

Culvert Locations

- Bullshead Road
- Fort Hunter Road
- Hartley Road
- Langley Road
- McKay Road 1
- McKay Road 2
- McKinney Road 4A
- McKinney Road 4B
- Pattersonville Road
- Shellstone Road
- Strevy Lane

Tetra Tech, Inc

Topographic Map

Montgomery County Culverts
Bullshead Road, Fort Hunter Road, Hartley Road,
Langley Road, McKay Road, McKinney Road,
Pattersonville Road, Shellstone Road, and Strevy Lane
Montgomery County, New York

Figure 2

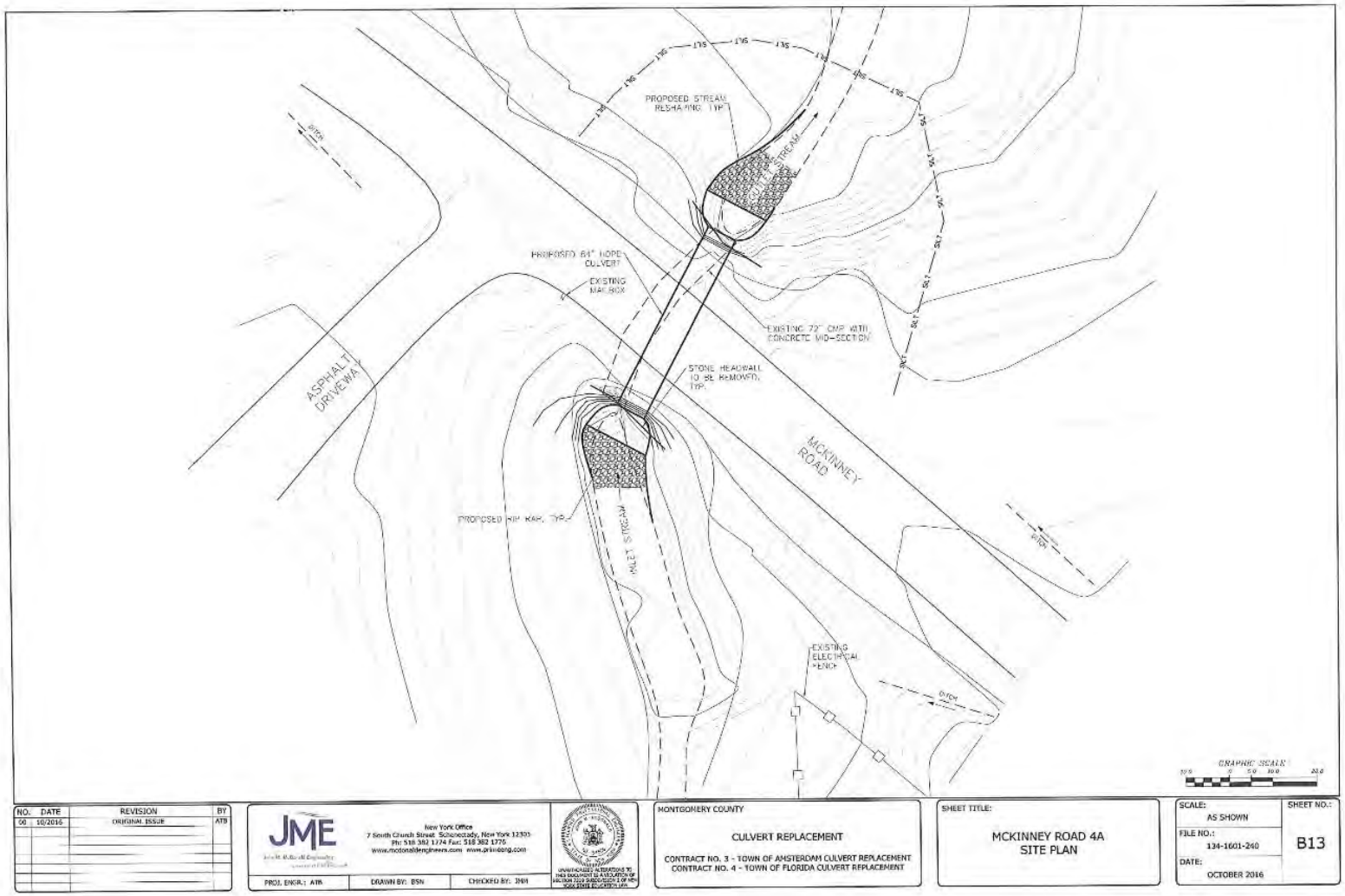
PROPOSED STREAM RESHAPING, TYP.
PROPOSED 84" HDPE CULVERT
EXISTING MAILBOX
EXISTING 72" CMP WITH CONCRETE MID-SECTION
STONE HEADWALL TO BE REMOVED, TYP.
ASPHALT DRIVEWAY
MCKINNEY ROAD
PROPOSED RIP RAP, TYP.
EXISTING ELECTRICAL FENCE
GRAPHIC SCALE
NO. DATE REVISION BY
00 10/2016 ORIGINAL ISSUE ATB
JME
New York Office
7 South Church Street Schenectady, New York 12305
Ph: 518 382 1774 Fax: 518 382 1775
www.mcdonaldengineers.com www.jme-eng.com
PROJ. ENGR.: ATB
DRAWN BY: BSN
CHECKED BY: JMH
MONTGOMERY COUNTY
CULVERT REPLACEMENT
CONTRACT NO. 3 - TOWN OF AMSTERDAM CULVERT REPLACEMENT
CONTRACT NO. 4 - TOWN OF FLORIDA CULVERT REPLACEMENT
SHEET TITLE:
MCKINNEY ROAD 4A
SITE PLAN
SCALE: AS SHOWN
FILE NO.: 134-1601-240
DATE: OCTOBER 2016
SHEET NO.: B13

Figure 3.

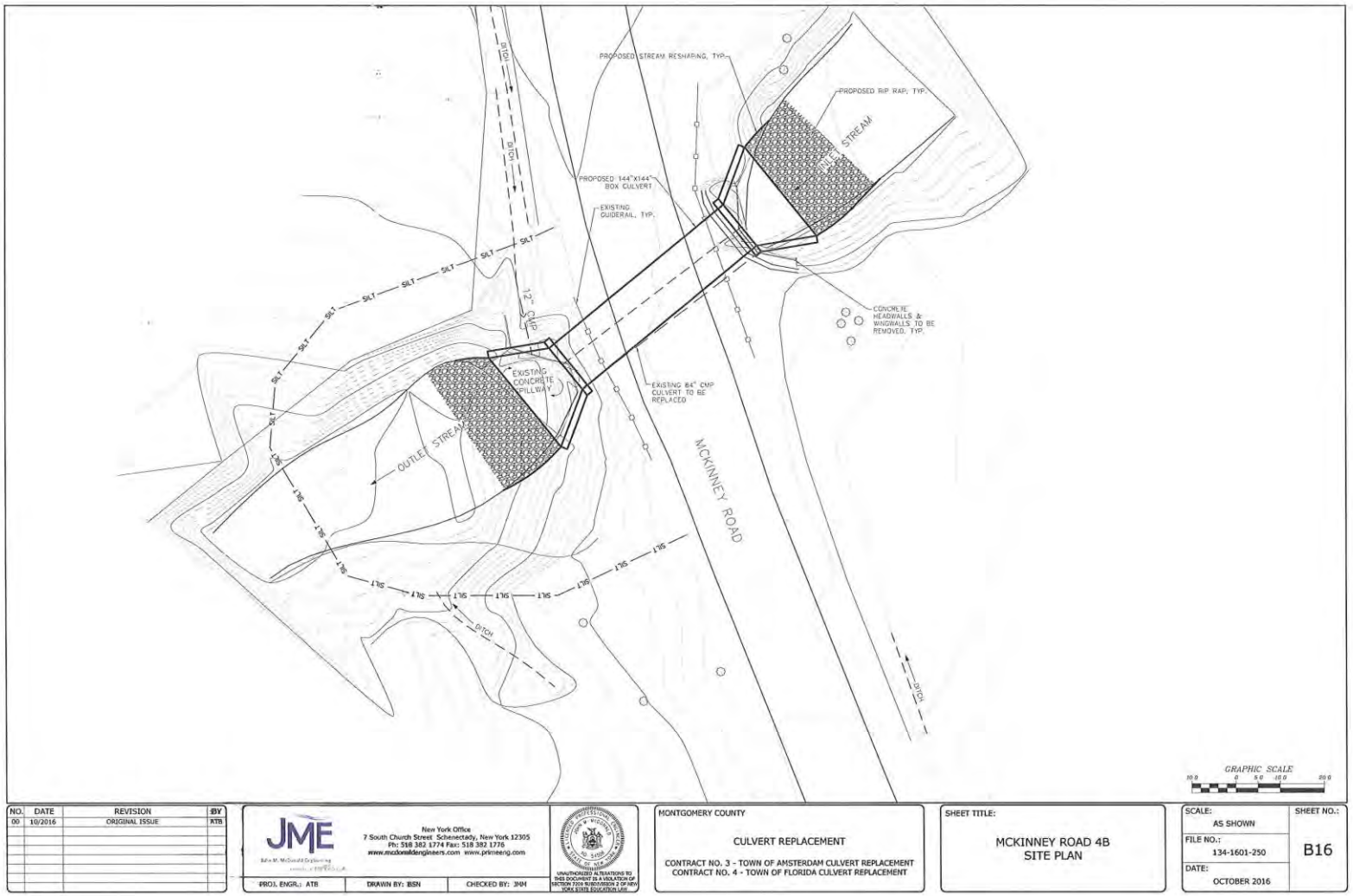
PROPOSED STREAM RESHAPING, TYP.
PROPOSED RIP RAP, TYP.
STREAM
PROPOSED 144"X144" BOX CULVERT
EXISTING GUIDERAIL, TYP.
CONCRETE HEADWALLS & WINGWALLS TO BE REMOVED, TYP.
EXISTING CONCRETE SPILLWAY
EXISTING 84" CMP CULVERT TO BE REPLACED
OUTLET STREAM
MCKINNEY ROAD
DITCH
SILT
GRAPHIC SCALE
NO. DATE REVISION BY
00 10/2016 ORIGINAL ISSUE ATB
JME
New York Office
7 South Church Street Schenectady, New York 12305
Ph: 518 382 1774 Fax: 518 382 1776
www.mcdonaldengineers.com www.primeeng.com
PROJ. ENGR.: ATB
DRAWN BY: BSN
CHECKED BY: JHM
MONTGOMERY COUNTY
CULVERT REPLACEMENT
CONTRACT NO. 3 - TOWN OF AMSTERDAM CULVERT REPLACEMENT
CONTRACT NO. 4 - TOWN OF FLORIDA CULVERT REPLACEMENT
SHEET TITLE:
MCKINNEY ROAD 4B
SITE PLAN
SCALE: AS SHOWN
FILE NO.: 134-1601-250
DATE: OCTOBER 2016
SHEET NO.: B16

Figure 4.

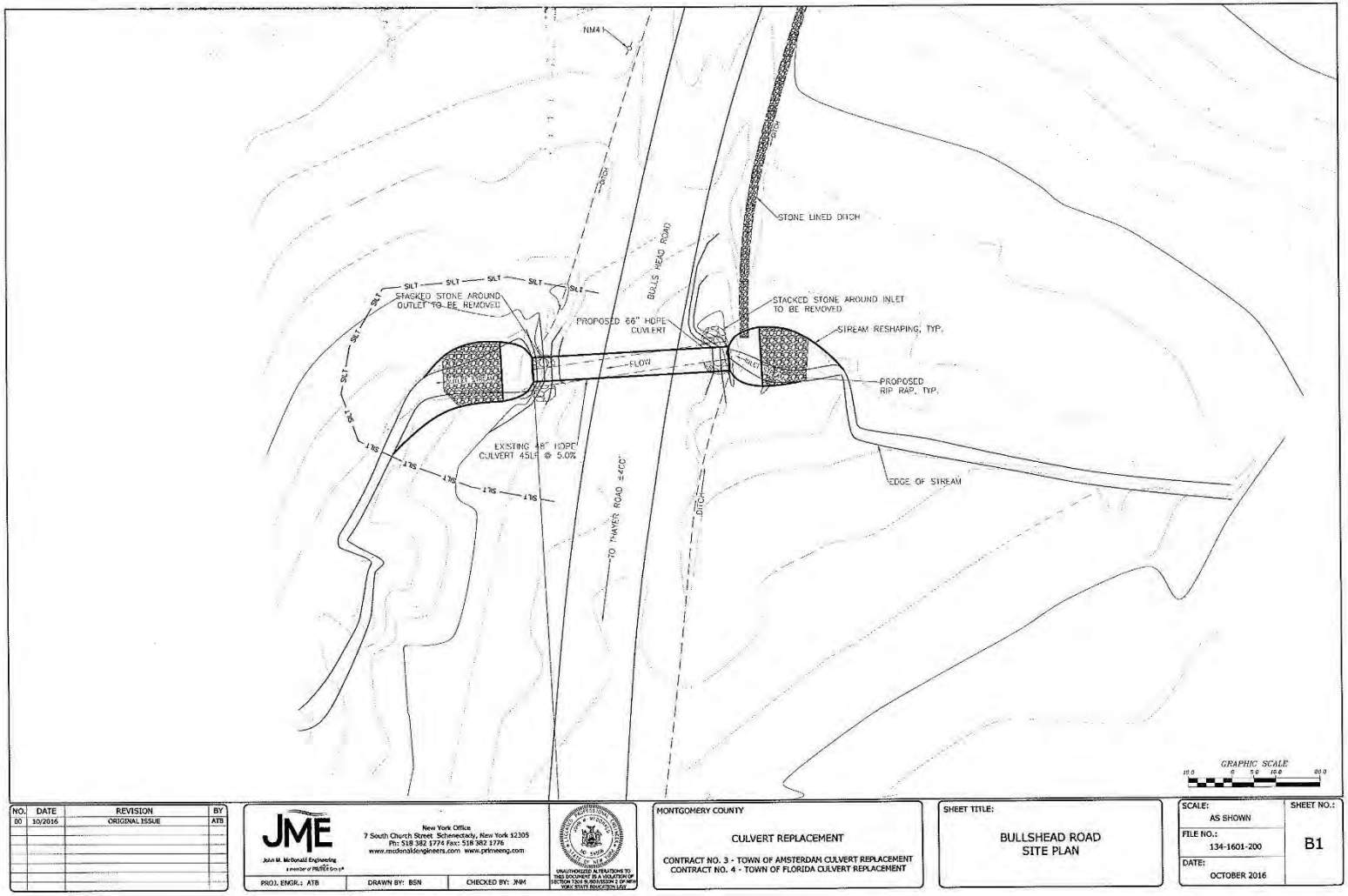
NM4
DITCH
BULLS HEAD ROAD
STONE LINED DITCH
SILT
STACKED STONE AROUND OUTLET TO BE REMOVED
PROPOSED 66" HDPE CULVERT
STACKED STONE AROUND INLET TO BE REMOVED
STREAM RESHAPING, TYP.
FLOW
OUTLET
PROPOSED RIP RAP, TYP.
EXISTING 48" HDPE CULVERT 45LF @ 5.0%
TO THAYER ROAD ±400'
EDGE OF STREAM
GRAPHIC SCALE
NO. DATE REVISION BY
00 10/2016 ORIGINAL ISSUE ATB
JME
John M. McDonald Engineering
New York Office
7 South Church Street Schenectady, New York 12305
Ph: 518 382 1774 Fax: 518 382 1776
www.mcdonaldengineers.com www.primeeng.com
PROJ. ENGR.: ATB
DRAWN BY: BSN
CHECKED BY: JNM
MONTGOMERY COUNTY
CULVERT REPLACEMENT
CONTRACT NO. 3 - TOWN OF AMSTERDAM CULVERT REPLACEMENT
CONTRACT NO. 4 - TOWN OF FLORIDA CULVERT REPLACEMENT
SHEET TITLE:
BULLSHEAD ROAD
SITE PLAN
SCALE: AS SHOWN
FILE NO.: 134-1601-200
DATE: OCTOBER 2016
SHEET NO.: B1

Figure 5.

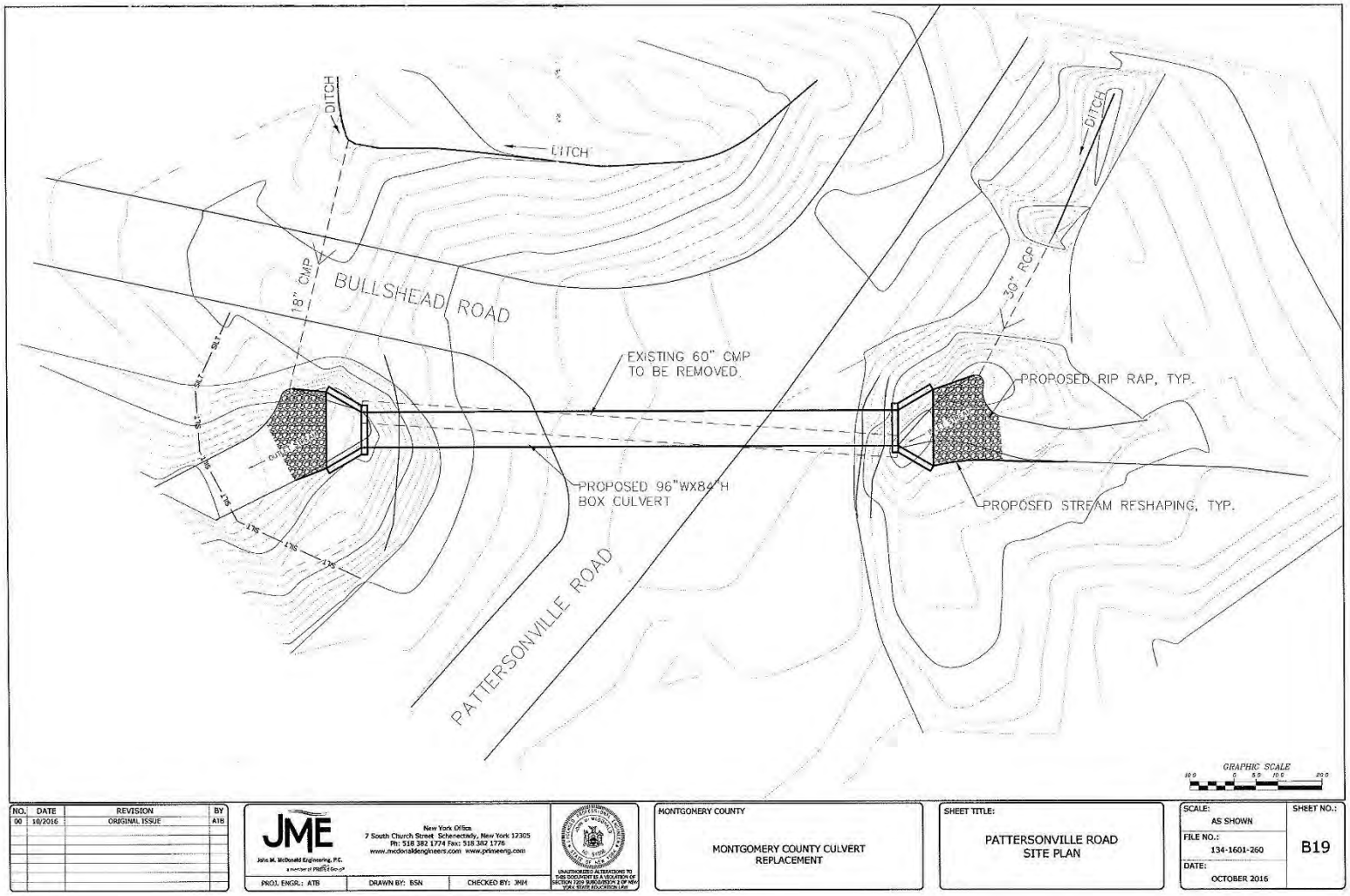
DITCH
DITCH
DITCH
18" CMP
BULLSHEAD ROAD
30" RCP
EXISTING 60" CMP
TO BE REMOVED
PROPOSED RIP RAP, TYP.
PROPOSED 96"WX84"H
BOX CULVERT
PROPOSED STREAM RESHAPING, TYP.
PATTERSONVILLE ROAD
GRAPHIC SCALE
NO. DATE REVISION BY
00 10/2016 ORIGINAL ISSUE ATB
JME
John M. McDonald Engineering, P.C.
New York Office
7 South Church Street Schenectady, New York 12305
Ph: 518 382 1774 Fax: 518 382 1776
www.mcdonaldengineers.com www.primeeng.com
PROJ. ENGR.: ATB
DRAWN BY: BSN
CHECKED BY: JNM
MONTGOMERY COUNTY
MONTGOMERY COUNTY CULVERT
REPLACEMENT
SHEET TITLE:
PATTERSONVILLE ROAD
SITE PLAN
SCALE:
AS SHOWN
FILE NO.:
134-1601-260
DATE:
OCTOBER 2016
SHEET NO.:
B19

Figure 6.

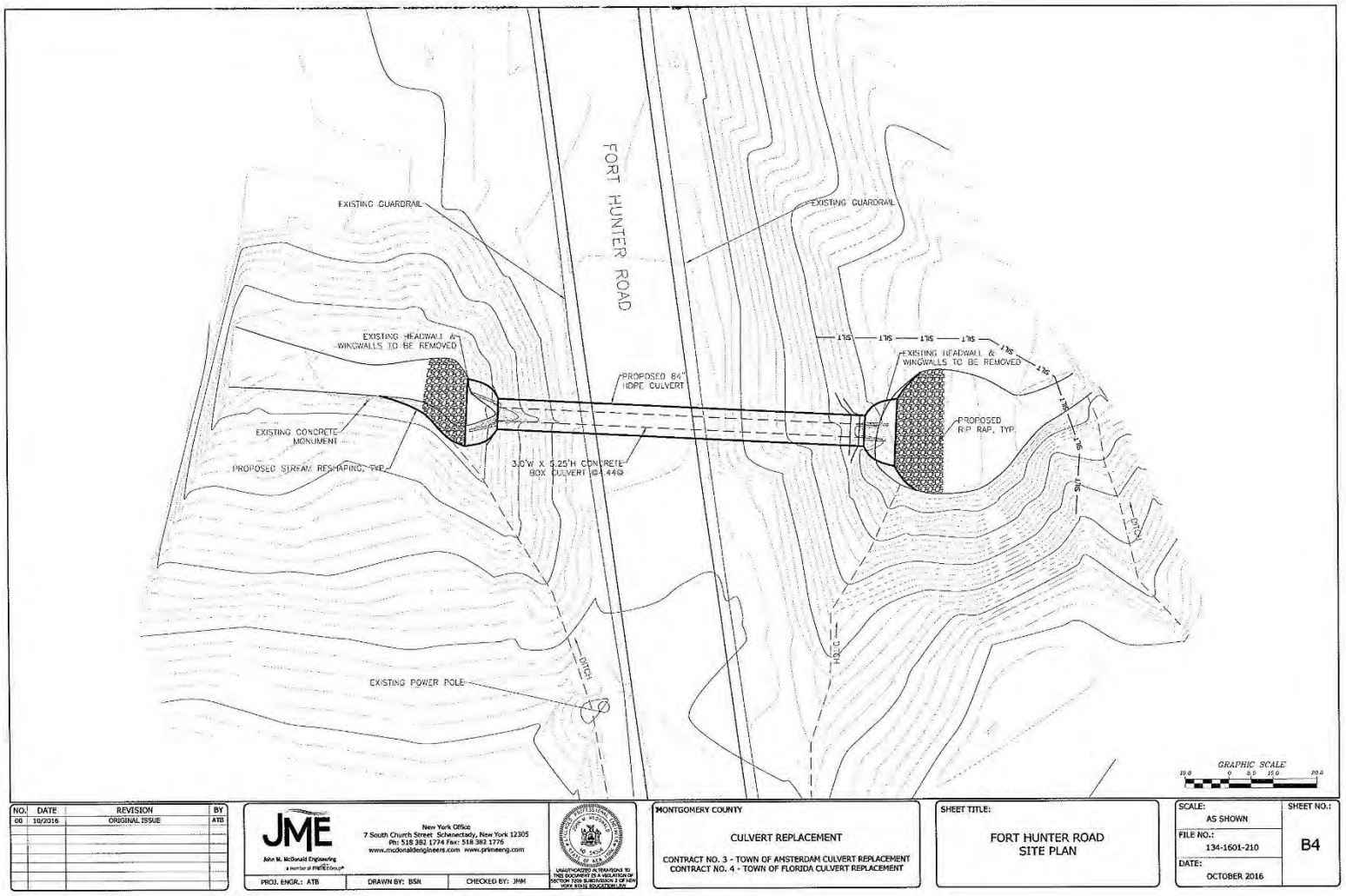
FORT HUNTER ROAD
EXISTING GUARDRAIL
EXISTING GUARDRAIL
EXISTING HEADWALL & WINGWALLS TO BE REMOVED
EXISTING HEADWALL & WINGWALLS TO BE REMOVED
PROPOSED 84" HDPE CULVERT
EXISTING CONCRETE MONUMENT
PROPOSED STREAM RESHAPING, TYP.
3.0'W X 6.25'H CONCRETE BOX CULVERT @ 44@
PROPOSED RIP RAP, TYP.
EXISTING POWER POLE
DITCH
DITCH
GRAPHIC SCALE
NO. DATE REVISION BY
00 10/2016 ORIGINAL ISSUE ATB
JME
John M. McDonald Engineering
New York Office
7 South Church Street Schenectady, New York 12305
Ph: 518 382 1774 Fax: 518 382 1776
www.mcdonaldengineers.com www.prkmeeng.com
PROJ. ENGR.: ATB
DRAWN BY: BSN
CHECKED BY: JMM
MONTGOMERY COUNTY
CULVERT REPLACEMENT
CONTRACT NO. 3 - TOWN OF AMSTERDAM CULVERT REPLACEMENT
CONTRACT NO. 4 - TOWN OF FLORIDA CULVERT REPLACEMENT
SHEET TITLE:
FORT HUNTER ROAD
SITE PLAN
SCALE:
AS SHOWN
FILE NO.:
134-1601-210
DATE:
OCTOBER 2016
SHEET NO.:
B4

Figure 7.

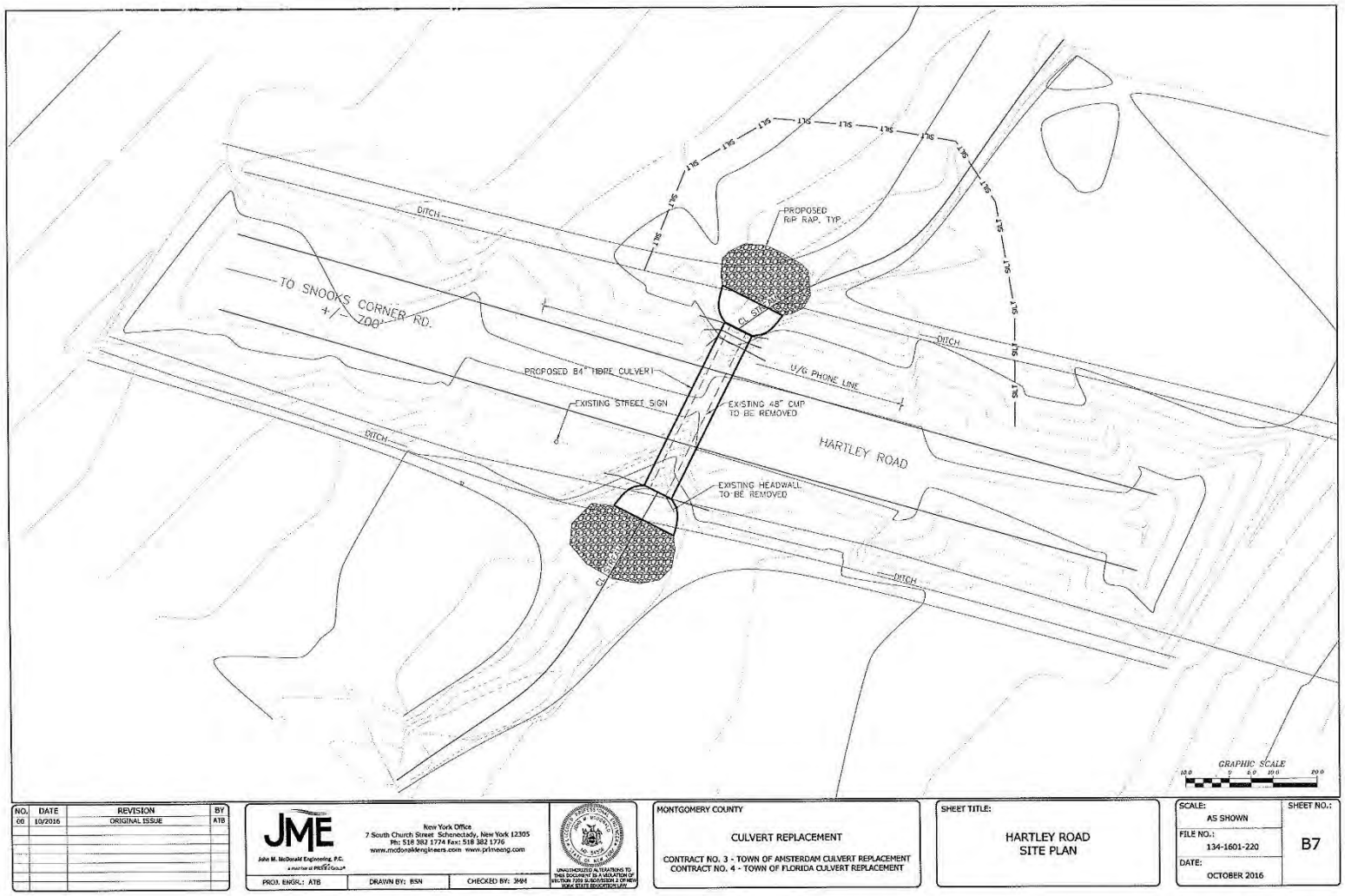
DITCH
TO SNOOKS CORNER RD.
+/- 700'
PROPOSED RIP RAP, TYP.
PROPOSED 84" HDPE CULVERT
EXISTING STREET SIGN
U/G PHONE LINE
EXISTING 48" CMP TO BE REMOVED
HARTLEY ROAD
EXISTING HEADWALL TO BE REMOVED
SILT
GRAPHIC SCALE
NO. DATE REVISION BY
00 10/2016 ORIGINAL ISSUE ATB
JME
John M. McDonald Engineering, P.C.
New York Office
7 South Church Street Schenectady, New York 12305
Ph: 518 382 1774 Fax: 518 382 1776
www.mcdonaldengineers.com www.primeeng.com
PROJ. ENGR.: ATB
DRAWN BY: BSN
CHECKED BY: JMM
MONTGOMERY COUNTY
CULVERT REPLACEMENT
CONTRACT NO. 3 - TOWN OF AMSTERDAM CULVERT REPLACEMENT
CONTRACT NO. 4 - TOWN OF FLORIDA CULVERT REPLACEMENT
SHEET TITLE:
HARTLEY ROAD
SITE PLAN
SCALE:
AS SHOWN
FILE NO.:
134-1601-220
DATE:
OCTOBER 2016
SHEET NO.:
B7

Figure 8.

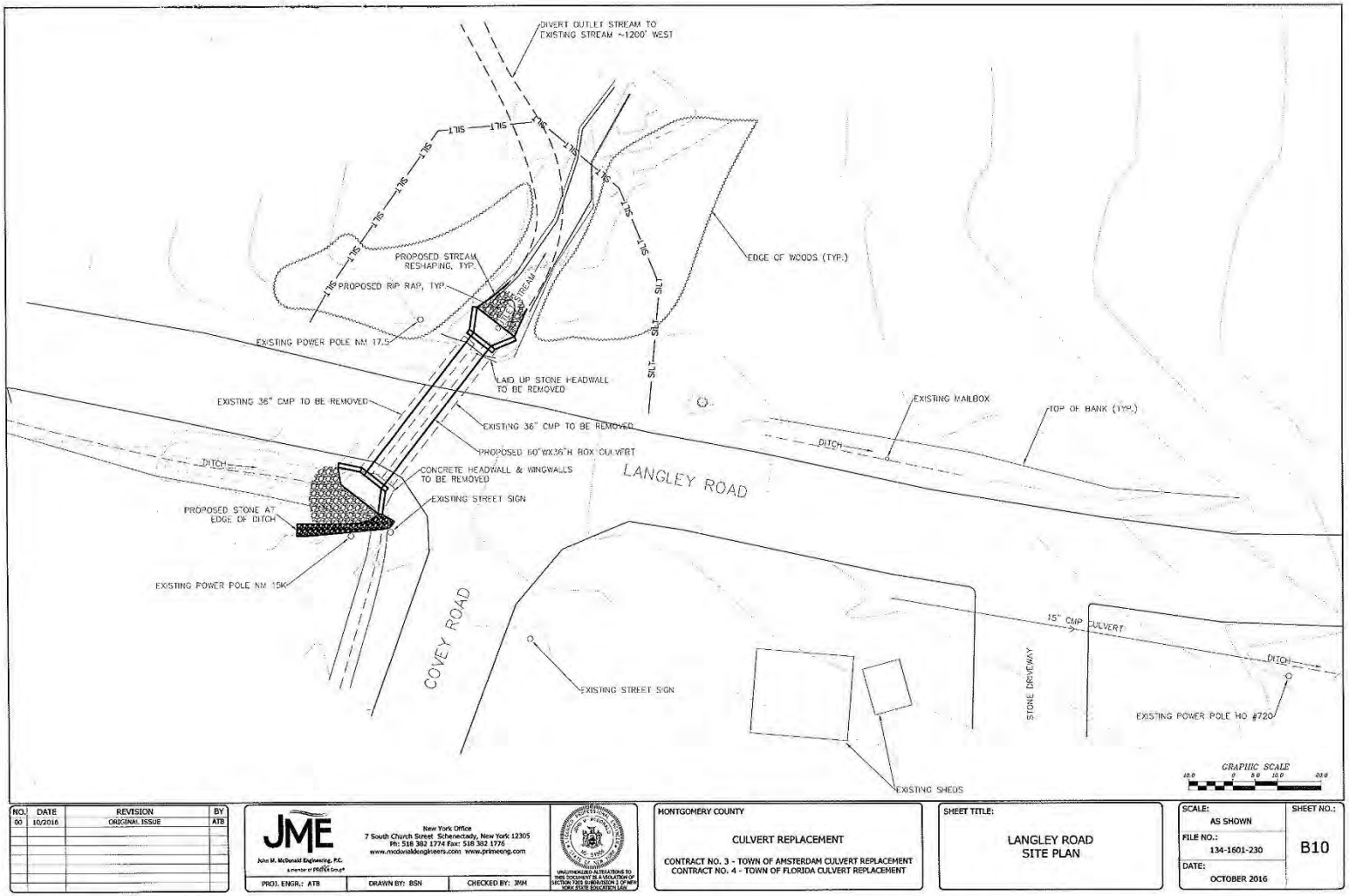
DIVERT OUTLET STREAM TO EXISTING STREAM ~1200' WEST
EDGE OF WOODS (TYP.)
PROPOSED STREAM RESHAPING, TYP.
PROPOSED RIP RAP, TYP.
EXISTING POWER POLE NM 17.5
LAID UP STONE HEADWALL TO BE REMOVED
EXISTING 36" CMP TO BE REMOVED
EXISTING 36" CMP TO BE REMOVED
PROPOSED 60"WX36"H BOX CULVERT
CONCRETE HEADWALL & WINGWALLS TO BE REMOVED
EXISTING STREET SIGN
PROPOSED STONE AT EDGE OF DITCH
EXISTING POWER POLE NM 15K
DITCH
LANGLEY ROAD
COVEY ROAD
EXISTING MAILBOX
TOP OF BANK (TYP.)
15" CMP CULVERT
STONE DRIVEWAY
EXISTING POWER POLE HO #720
EXISTING SHEDS
GRAPHIC SCALE
NO. DATE REVISION BY
00 10/2016 ORIGINAL ISSUE ATB
JME
John M. McDonald Engineering, P.C.
New York Office
7 South Church Street Schenectady, New York 12305
Ph: 518 382 1774 Fax: 518 382 1776
www.mcdonaldengineers.com www.primeeng.com
PROJ. ENGR.: ATB
DRAWN BY: BSN
CHECKED BY: JNM
MONTGOMERY COUNTY
CULVERT REPLACEMENT
CONTRACT NO. 3 - TOWN OF AMSTERDAM CULVERT REPLACEMENT
CONTRACT NO. 4 - TOWN OF FLORIDA CULVERT REPLACEMENT
SHEET TITLE:
LANGLEY ROAD SITE PLAN
SCALE: AS SHOWN
FILE NO.: 134-1601-230
DATE: OCTOBER 2016
SHEET NO.: B10

Figure 9.

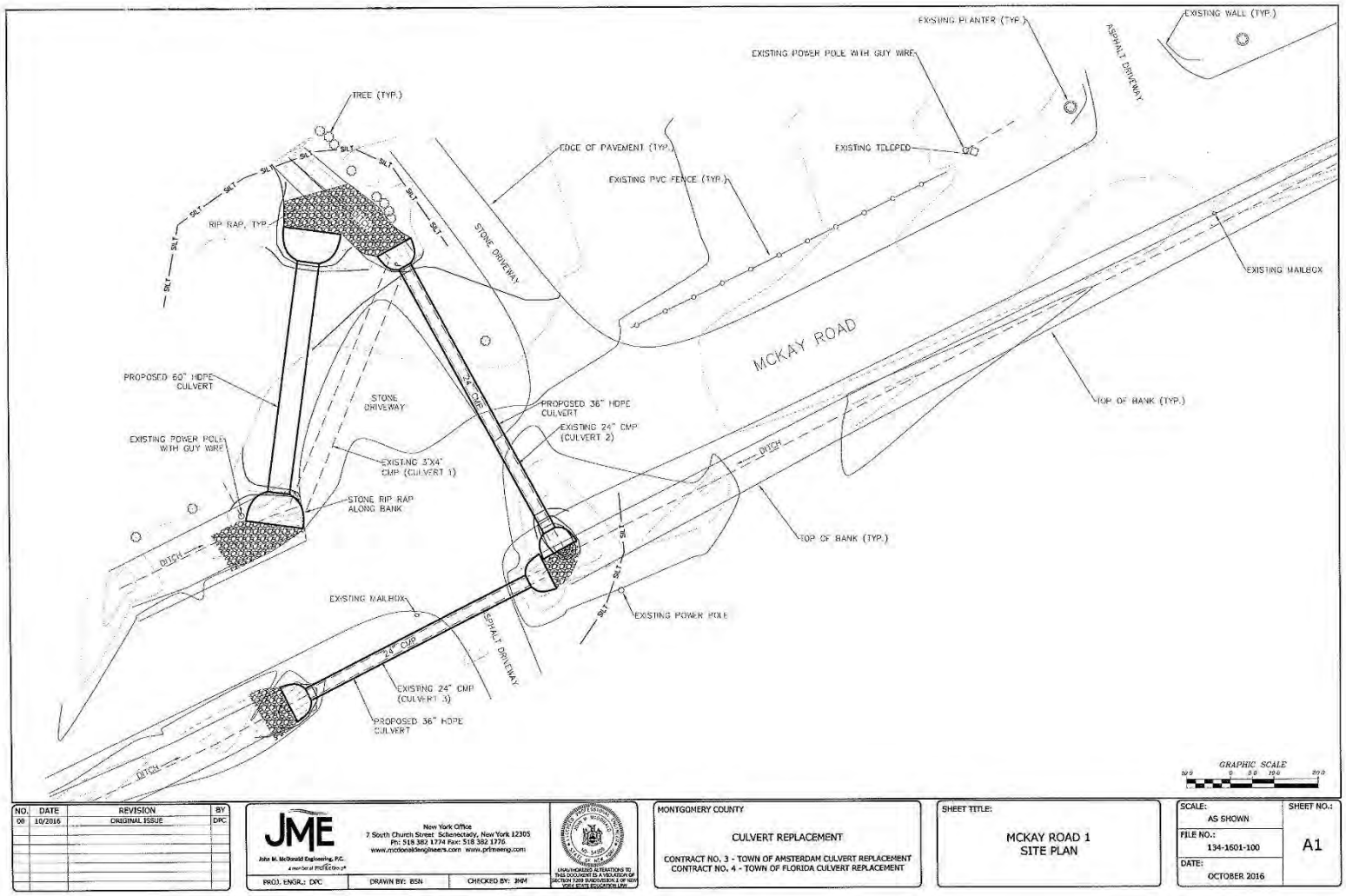
EXISTING PLANTER (TYP.)
EXISTING WALL (TYP.)
EXISTING POWER POLE WITH GUY WIRE
ASPHALT DRIVEWAY
TREE (TYP.)
EDGE OF PAVEMENT (TYP.)
EXISTING TELEPED
EXISTING PVC FENCE (TYP.)
RIP RAP, TYP.
STONE DRIVEWAY
EXISTING MAILBOX
MCKAY ROAD
PROPOSED 60" HDPE CULVERT
STONE DRIVEWAY
24" CMP
PROPOSED 36" HDPE CULVERT
EXISTING 24" CMP (CULVERT 2)
TOP OF BANK (TYP.)
EXISTING POWER POLE WITH GUY WIRE
EXISTING 3'X4' CMP (CULVERT 1)
DITCH
STONE RIP RAP ALONG BANK
TOP OF BANK (TYP.)
DITCH
EXISTING MAILBOX
EXISTING POWER POLE
ASPHALT DRIVEWAY
24" CMP
EXISTING 24" CMP (CULVERT 3)
PROPOSED 36" HDPE CULVERT
DITCH
GRAPHIC SCALE
NO. DATE REVISION BY
00 10/2016 ORIGINAL ISSUE DPC
JME
John M. McDonald Engineering, P.C.
New York Office
7 South Church Street Schenectady, New York 12305
Ph: 518 382 1774 Fax: 518 382 1776
www.mcdonaldengineers.com www.primeeng.com
PROJ. ENGR.: DPC
DRAWN BY: BSN
CHECKED BY: JMM
MONTGOMERY COUNTY
CULVERT REPLACEMENT
CONTRACT NO. 3 - TOWN OF AMSTERDAM CULVERT REPLACEMENT
CONTRACT NO. 4 - TOWN OF FLORIDA CULVERT REPLACEMENT
SHEET TITLE:
MCKAY ROAD 1
SITE PLAN
SCALE: AS SHOWN
SHEET NO.: A1
FILE NO.: 134-1601-100
DATE: OCTOBER 2016

Figure 10.

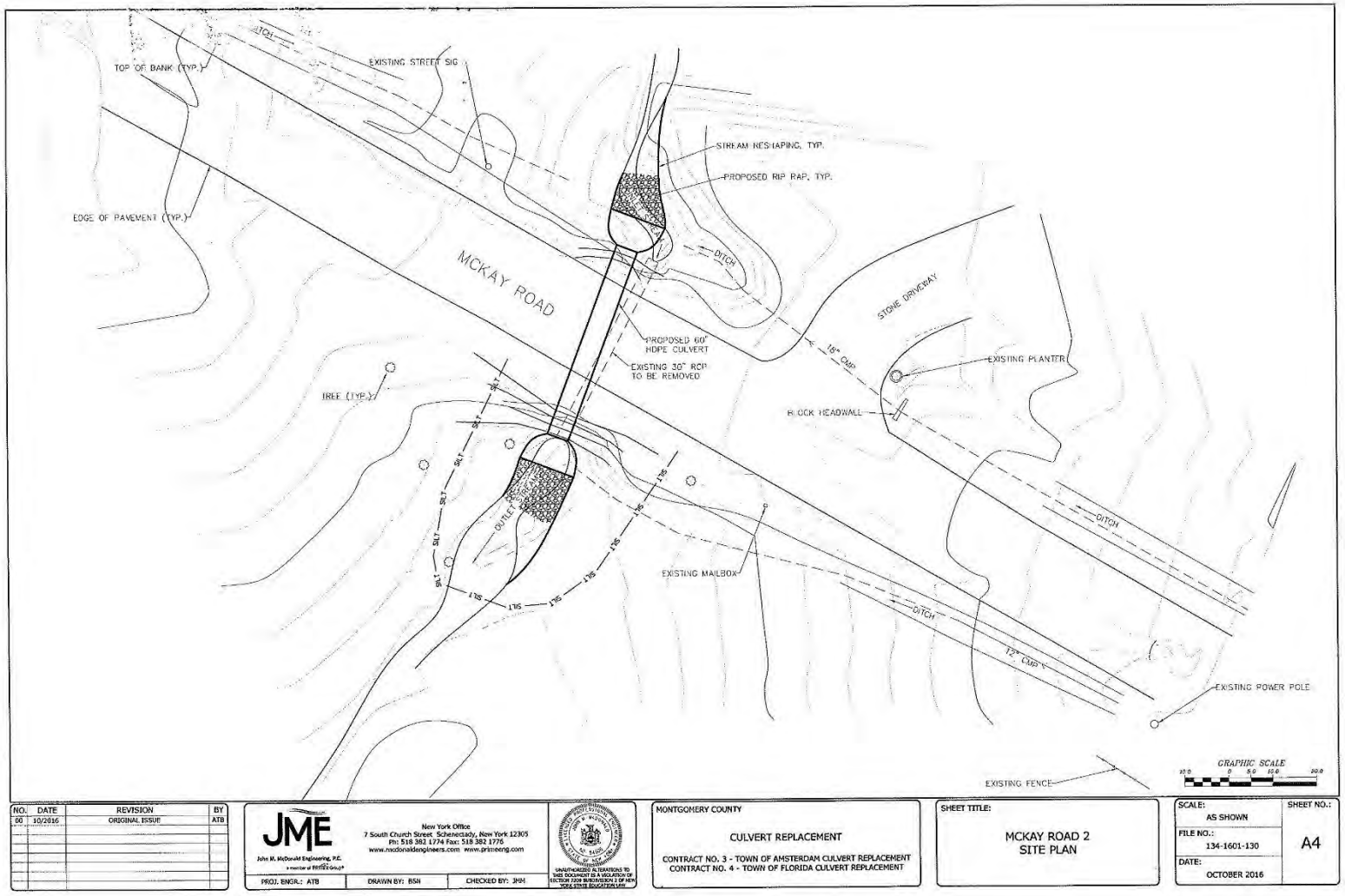
TOP OF BANK (TYP.)
EXISTING STREET SIG
STREAM RESHAPING, TYP.
PROPOSED RIP RAP, TYP.
EDGE OF PAVEMENT (TYP.)
MCKAY ROAD
DITCH
STONE DRIVEWAY
PROPOSED 60" HDPE CULVERT
EXISTING 30" RCP TO BE REMOVED
18" CMP
EXISTING PLANTER
TREE (TYP.)
BLOCK HEADWALL
OUTLET PROTECTION
EXISTING MAILBOX
DITCH
DITCH
12" CMP
EXISTING POWER POLE
EXISTING FENCE
GRAPHIC SCALE
NO. DATE REVISION BY
00 10/2016 ORIGINAL ISSUE ATB
JME
John M. McDonald Engineering, P.C.
New York Office
7 South Church Street, Schenectady, New York 12305
Ph: 518 382 1774 Fax: 518 382 1776
www.mcdonaldengineers.com www.primeeng.com
PROJ. ENGR.: ATB
DRAWN BY: BSH
CHECKED BY: JNM
MONTGOMERY COUNTY
CULVERT REPLACEMENT
CONTRACT NO. 3 - TOWN OF AMSTERDAM CULVERT REPLACEMENT
CONTRACT NO. 4 - TOWN OF FLORIDA CULVERT REPLACEMENT
SHEET TITLE:
MCKAY ROAD 2
SITE PLAN
SCALE: AS SHOWN
FILE NO.: 134-1601-130
DATE: OCTOBER 2016
SHEET NO.: A4

Figure 11.

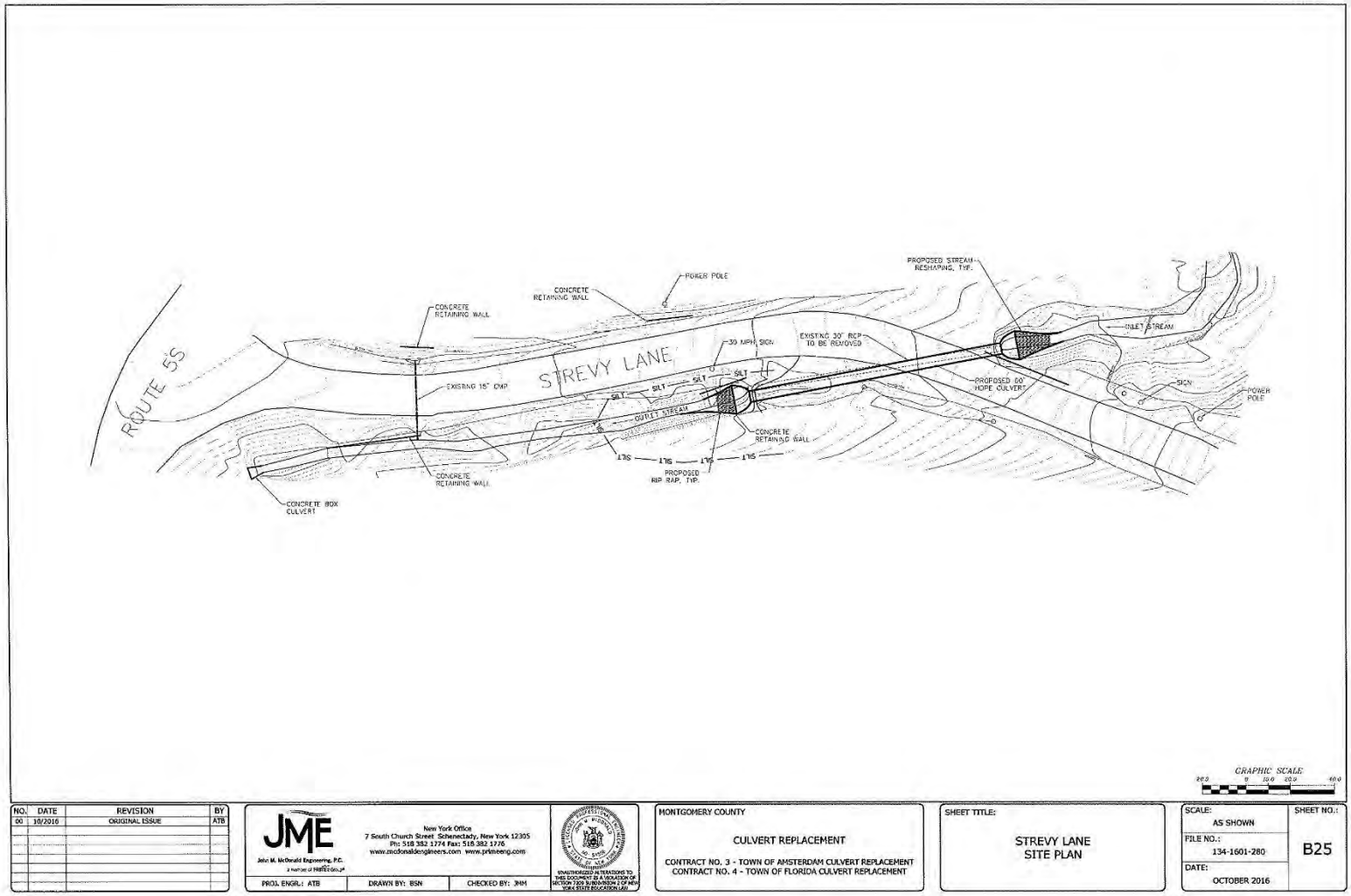
ROUTE 5S
STREVY LANE
CONCRETE RETAINING WALL
POWER POLE
PROPOSED STREAM RESHAPING, TYP.
30 MPH SIGN
EXISTING 30" RCP TO BE REMOVED
INLET STREAM
EXISTING 15" CMP
PROPOSED 60" HDPE CULVERT
SIGN
POWER POLE
SILT
OUTLET STREAM
CONCRETE RETAINING WALL
PROPOSED RIP RAP, TYP.
CONCRETE BOX CULVERT
GRAPHIC SCALE
NO. DATE REVISION BY
00 10/2016 ORIGINAL ISSUE ATB
JME
John M. McDonald Engineering, P.C.
New York Office
7 South Church Street Schenectady, New York 12305
Ph: 518 382 1774 Fax: 518 382 1776
www.mcdonaldengineers.com www.primeeng.com
PROJ. ENGR.: ATB
DRAWN BY: BSN
CHECKED BY: JMM
MONTGOMERY COUNTY
CULVERT REPLACEMENT
CONTRACT NO. 3 - TOWN OF AMSTERDAM CULVERT REPLACEMENT
CONTRACT NO. 4 - TOWN OF FLORIDA CULVERT REPLACEMENT
SHEET TITLE:
STREVY LANE
SITE PLAN
SCALE:
AS SHOWN
FILE NO.:
134-1601-280
DATE:
OCTOBER 2016
SHEET NO.:
B25

Figure 12.

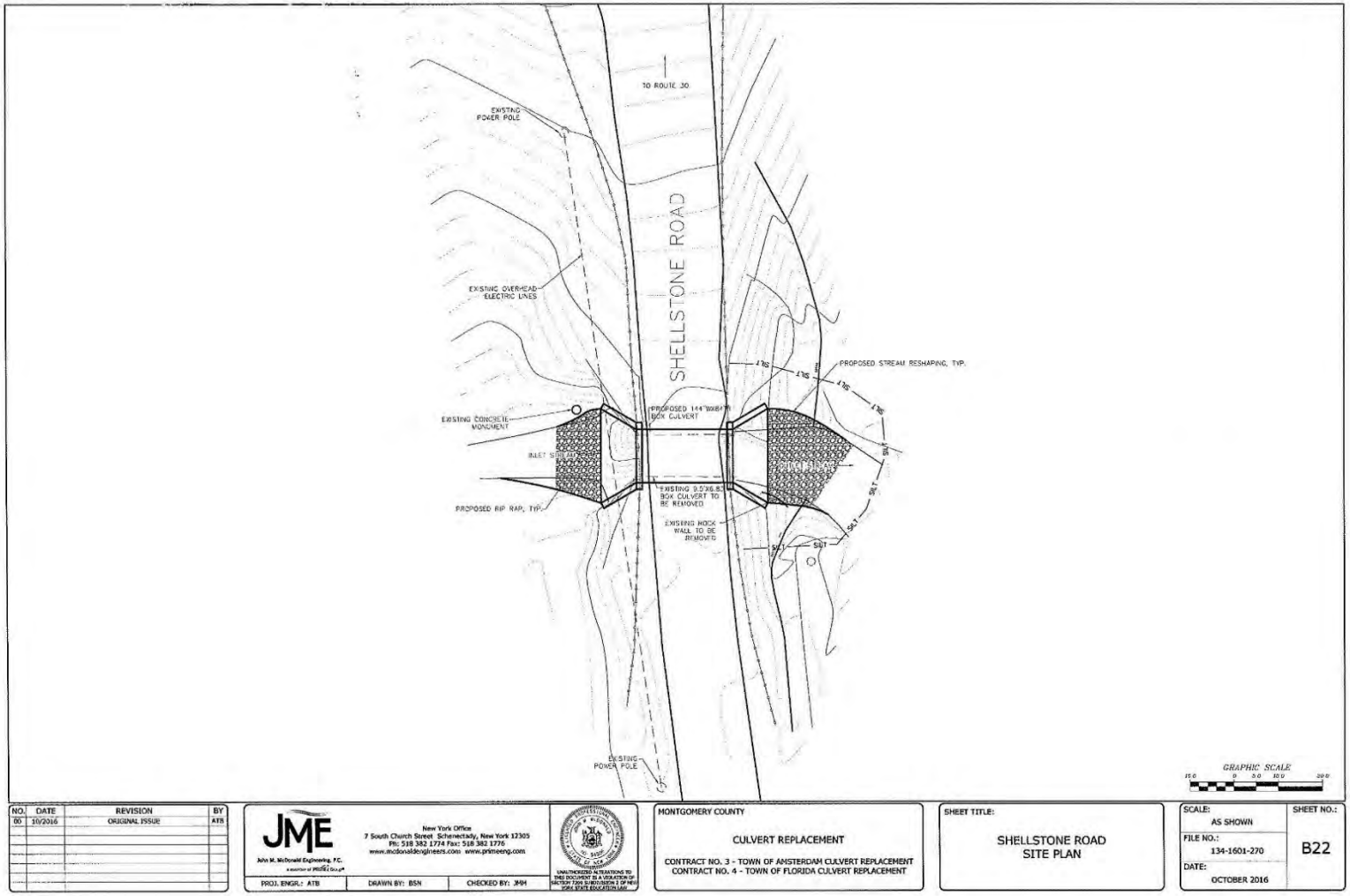
TO ROUTE 30
EXISTING POWER POLE
SHELLSTONE ROAD
EXISTING OVERHEAD ELECTRIC LINES
PROPOSED STREAM RESHAPING, TYP.
EXISTING CONCRETE MONUMENT
PROPOSED 144"W(8'H) BOX CULVERT
INLET STREAM
EXISTING 9.5'X6.5' BOX CULVERT TO BE REMOVED
PROPOSED RIP RAP, TYP.
EXISTING ROCK WALL TO BE REMOVED
EXISTING POWER POLE
GRAPHIC SCALE
NO. DATE REVISION BY
00 10/2016 ORIGINAL ISSUE ATB
JME
John M. McDonald Engineering, P.C.
New York Office
7 South Church Street Schenectady, New York 12305
Ph: 518 382 1774 Fax: 518 382 1776
www.mcdonaldengineers.com www.primeeng.com
PROJ. ENGR.: ATB
DRAWN BY: BSN
CHECKED BY: JMM
MONTGOMERY COUNTY
CULVERT REPLACEMENT
CONTRACT NO. 3 - TOWN OF AMSTERDAM CULVERT REPLACEMENT
CONTRACT NO. 4 - TOWN OF FLORIDA CULVERT REPLACEMENT
SHEET TITLE:
SHELLSTONE ROAD
SITE PLAN
SCALE:
AS SHOWN
FILE NO.:
134-1601-270
DATE:
OCTOBER 2016
SHEET NO.:
B22

Figure 13.

Governor's Office of
Storm Recovery

ANDREW M. CUOMO
Governor

LISA BOVA-HIATT
Executive Director

April 26, 2017

Ron LaFrance, Jr.; Paul Thompson; and Beverly Cook, Chiefs
St. Regis Mohawk Tribe
412 State Route 37
Akwesasne, NY 13655

Re: Section 106 Compliance for the Montgomery County Culverts Enlargement Project, Montgomery County, New York

Dear Chiefs of the St. Regis Mohawk Tribe:

Pursuant to the Disaster Relief Appropriations Act, 2013 (Public Law 113-2) and the Housing and Community Development Act (42 U.S.C. § 5301 et seq.), the Governor's Office of Storm Recovery (GOSR), an office of New York State Homes and Community Renewal's Housing Trust Fund Corporation as a recipient of Community Development Block Grant – Disaster Recovery ("CDBG-DR") funds from the United States Department of Housing and Urban Development ("HUD"), is serving as the entity responsible for compliance with the HUD environmental review procedures set forth in 24 CFR Part 58. GOSR is acting on behalf of HUD in providing the enclosed project information and inviting this discussion with your Tribe to respond with any concerns or comments.

GOSR processes environmental reviews for projects funded with HUD CDBG-DR on a case-by-case basis. In accordance with Section 101(d)(6)(B) of the National Historic Preservation Act (NHPA) of 1966, as amended (16 U.S.C. 470a), and its implementing regulations, 36 Code of Federal Regulations (CFR) Part 800, this letter serves as notification of the proposed action. This consultation is being sent to the Mohawk Nation and the Saint Regis Mohawk Tribe.

Proposed Project Description and Area of Potential Effects: GOSR proposes to provide funding to the Towns of Florida and Amsterdam, Montgomery County, New York to enlarge existing culverts at eleven road crossings throughout the Towns (Project). During Hurricane Irene and Tropical Storm Lee, the existing culvert crossings proved insufficient to handle major flooding and were overwhelmed by flood waters. Flooding of nearby roads and homes occurred in many areas throughout both towns. The construction component of the Project will alleviate the risk of flooding in each of the locations during future storm events.

The Project includes a typical culvert upgrade of various sizes to a box concrete culvert or high density polyethylene pipe (HDPE), with stone riprap aprons and channel rehabilitation that will be limited to the channel and extend 50 feet from the headwalls at both the upstream and downstream ends.

The overall Project requires: vegetation removal; removal of street surfaces including curbs and walks in some places; excavations; cutting; filling and grading; installation of pipes and culverts; construction of soil berms; placement of rip-rap or similar armoring; and post-construction restoration of soil surfaces and the like.

The smaller culverts would be made of HDPE and the larger culverts would be four-sided precast concrete box culverts. At several locations the Project would include removal of existing headwalls, stream reshaping and installation of rip-rap at the inlet and outlet of the proposed culvert, and alignment correction. The culvert bottoms would have embedment (i.e., be filled to an appropriate depth) of natural streambed material. It is anticipated that construction would involve substantial earthwork, and temporary or permanent easements may be required. Construction would occur within the existing rights-of-way of each road to the extent feasible.

The area of potential effects (APE) for each culvert enlargement would include all areas that will be affected by ground disturbance. In addition to the locations immediately effected by the enlargement of the 11 culverts, the APE also includes a 30 foot buffer zone around the work area. Consideration of the impact on cultural resources of the Project includes all potential cultural resources within the APE.

This construction will occur at the following eleven locations (Figs. 1 and 2) and is described for each culvert in Table 1

Table 1
Culvert Locations and Construction Details

Culvert Identification	Location	Construction Details
Culvert No. 4A	McKinney Road (1,600 feet north of Lost Valley Road) Town of Florida, New York	The existing 72-inch corrugated metal pipe (CMP) culvert with a concrete mid-section conveying an unnamed stream beneath McKinney Road would be removed, realigned and replaced with an 84-inch HDPE culvert. The bottom of the proposed new culvert would have a 17-inch embedment (i.e., be filled to a depth of 17 inches) of natural streambed material. The existing stone headwall at the inlet of the existing culvert also would be removed. The Project at this site would include stream reshaping, and rip-rap would be installed at the inlet and outlet of the proposed culvert (Fig. 3).
Culvert No. 4B	McKinney Road (3,200 feet north of Peck Road) Town of Florida, New York	The existing 84-inch CMP culvert conveying an unnamed stream beneath McKinney Road would be removed, realigned and replaced with a 144-inch by 144-inch box culvert. The bottom of the proposed new culvert would have a 29-inch embedment of natural streambed material. The

Table 1
Culvert Locations and Construction Details

Culvert Identification	Location	Construction Details
		existing concrete headwall and wing walls at the inlet of the existing culvert, and the existing spillway also would be removed. The Project at this site would include stream reshaping, and rip-rap would be installed at the inlet and outlet of the proposed culvert (Fig. 4).
Culvert No. 5B	Bulls Head Road (450 feet north of Thayer Road) Town of Florida, New York	The existing 48-inch HDPE culvert conveying an unnamed stream beneath Bullshead Road would be removed, realigned and replaced with a 66-inch HDPE culvert with a proposed 13-inch embedment of natural streambed material. Stacked stone at the inlet and outlet of the existing culvert also would be removed. The Project at this site would include stream reshaping, and rip-rap would be installed at the inlet and outlet of the proposed culvert. The drainage ditch along the east side of the road would be lined with stone (Fig. 5).
Culvert No. 6A	Pattersonville Road (100 feet south of Bulls Head Road) Town of Florida, New York	The existing 60-inch CMP culvert conveying an unnamed stream beneath Pattersonville Road at the east side of the intersection with Bullshead Road would be removed, realigned and replaced with a 96-inch by 84-inch box culvert. The bottom of the proposed new culvert would have a of 17-inch embedment of natural streambed material. The Project at this site would include stream reshaping, and rip-rap would be installed at the inlet and outlet of the proposed culvert (Fig. 6).
Fort Hunter Road	560 feet southeast of Morris Road Town of Florida, New York	The existing 3-foot by 5.25-foot concrete box culvert conveying an unnamed stream beneath Fort Hunter Road would be removed and replaced with an 84-inch HDPE culvert. The bottom of the proposed new culvert would have a 17-inch embedment of natural streambed material. The existing headwall and wing walls at the inlet and outlet of the existing culvert also would be removed. The Project at this site would include stream reshaping, and rip-rap would be

Table 1
Culvert Locations and Construction Details

Culvert Identification	Location	Construction Details
		installed at the inlet and outlet of the proposed culvert (Fig. 7).
Hartley Road	900 feet southeast of Snooks Corners Road Town of Florida, New York	The existing 48-inch CMP culvert conveying an unnamed stream beneath Hartley Road would be removed and replaced with an 84-inch HDPE culvert. The bottom of the proposed new culvert would have a 17-inch embedment of natural streambed material. The existing headwall of the existing culvert also would be removed. Rip-rap would be installed at the inlet and outlet of the proposed culvert (Fig. 8).
Langley Road	700 feet southwest of Thayer Road Town of Florida, New York	The existing 36-inch CMP culvert crossing Langley Road adjacent to the intersection with Covey Road would be removed and replaced with a 60-inch by 36-inch box culvert. The bottom of the proposed new culvert would have a 17-inch embedment of natural streambed material. The existing concrete headwall and wing walls at the inlet and stone headwall at the outlet of the existing culvert also would be removed. The Project at this site would include stream reshaping, and rip-rap would be installed at the inlet and outlet of the proposed culvert. Stone would be installed at the ditch at the inlet of the proposed culvert, and the outlet stream would be diverted to the existing stream, approximately 1,200 feet to the west (Fig. 9).
McKay Road No. 1	600 feet south of McDonald Drive Town of Amsterdam, New York	The three existing CMP culverts would be replaced by larger HDPE culverts. Rip-rap would be installed at the ends of each culvert. The 24-inch culvert extending along the stone driveway to the west of McKay Road and extending to the ditch on the east side of the road would be replaced with a 36-inch culvert and would include a 7-inch embedment of natural streambed material. The 3-foot by 4-foot culvert in the same area that extends to the ditch on the west side of the road would be removed, realigned, and replaced by a 60-inch culvert with

Table 1
Culvert Locations and Construction Details

Culvert Identification	Location	Construction Details
		a 12-inch embedment of natural streambed material. The 24-inch culvert, carrying the ditch along the east side of the road beneath an asphalt drive, would be replaced by a 36-inch culvert with a 7-inch embedment of natural streambed material (Fig. 10).
McKay Road No. 2	2,000 feet south of McDonald Drive Town of Amsterdam, New York	The existing 30-inch reinforced concrete pipe that conveys Fitzpatrick Creek under McKay Road would be removed, realigned, and replaced by a 60-inch HDPE culvert with a 12-inch embedment of natural streambed material. The Project at this site would include stream reshaping, and rip-rap would be installed at each end of the culvert (Fig. 11).
Strevy Lane	1,100 feet northwest of intersection with Fort Hunter Road Town of Florida, New York	The existing 30-inch reinforced concrete pipe that conveys an unnamed stream under Strevy Lane near its intersection with State Route 30 would be removed, realigned, and replaced with a 60-inch HDPE culvert. The bottom of the proposed new culvert would be lined with natural streambed material. The Project at this site would include stream reshaping, and rip-rap would be installed at the inlet and outlet of the proposed culvert (Fig. 12).
Shellstone Road	200 feet southwest of Route 30/Sulphur Springs Road Town of Florida, New York	The existing 9.5-foot by 6.83-foot concrete box culvert conveying an unnamed stream beneath Shellstone Road near its intersection with State Route 5S would be removed and replaced with a 144-inch by 84-inch box culvert. The bottom of the proposed new culvert would have a 17-inch embedment of natural streambed material. The Project at this site would include stream reshaping, and rip-rap would be installed at the inlet and outlet of the proposed culvert (Fig. 13).

Assessment of Cultural Resources Sensitivity: The assessment of effects on cultural resources resulting from the enlargement of 11 culverts in the towns of Florida and Amsterdam, Montgomery County, New York is based primarily on the presence of documented cultural resources in or near the APE according to the New York State Cultural Resource Information

System (NY-CRIS). The potential cultural resources sensitivity of each culvert location and the potential Project effect on each is described in Table 2.

Table 2
Culvert-Specific Cultural Resources Sensitivity and Potential Project Effects

Culvert Identification	Potential Cultural Resources Sensitivity	Potential Project Effect
Culvert No. 4A	This culvert is not in an archaeologically sensitive area or in the immediate vicinity of any historic structures according to NY-CRIS. However, an archaeologically sensitive area is located approximately 185 feet to the southeast of the APE suggesting the location may be categorized as having high archaeological sensitivity.	Due to disturbance caused by previous culvert construction within the APE it is unlikely that the proposed culvert improvements will impact any cultural resources.
Culvert No. 4B	This culvert is within an archaeologically sensitive area according to NY-CRIS.	Due to disturbance caused by previous culvert construction within the APE it is unlikely that the proposed culvert improvements will impact any cultural resources.
Culvert No. 5B	This culvert is not within an archaeologically sensitive area and no historic structures are in the immediate vicinity according to NY-CRIS.	The Project is unlikely to affect NRHP-eligible resources at this location.
Culvert No. 6A	This culvert is not within an archaeologically sensitive area and no historic structures are in the immediate vicinity according to NY-CRIS.	The Project is unlikely to affect NRHP-eligible resources at this location.
Fort Hunter Road	This culvert is within an archaeologically sensitive area according to NY-CRIS.	Due to disturbance caused by previous culvert construction within the APE it is unlikely that the proposed culvert improvements will impact any cultural resources.
Hartley Road	This culvert is within an archaeologically sensitive area according to NY-CRIS.	Due to disturbance caused by previous culvert construction within the APE it is unlikely that the

Table 2
Culvert-Specific Cultural Resources Sensitivity and Potential Project Effects

Culvert Identification	Potential Cultural Resources Sensitivity	Potential Project Effect
		proposed culvert improvements will impact any cultural resources.
Langley Road	This culvert is not within an archaeologically sensitive area and no historic structures are in the immediate vicinity according to NY-CRIS. However, the proposed APE is approximately 400 feet west of Terwilleger Creek and the APE's proximity to a drainage increases its potential to be archaeologically sensitive.	Due to disturbance caused by previous culvert construction within the APE it is unlikely that the proposed culvert improvements will impact any cultural resources.
McKay Road No. 1	This culvert is not within an archaeologically sensitive area and no historic structures are in the immediate vicinity according to NY-CRIS. However, the proposed APE is approximately 195 feet west of Fitzpatrick Creek and the APE's proximity to a drainage increases its potential to be archaeologically sensitive.	Due to disturbance caused by previous culvert construction within the APE it is unlikely that the proposed culvert improvements will impact any cultural resources.
McKay Road No. 2	This culvert is not within an archaeologically sensitive area and no historic structures are in the immediate vicinity according to NY-CRIS. However, the proposed APE is approximately 90 feet west of Fitzpatrick Creek and 500 feet northeast of an archaeologically sensitive area according to NY-CRIS. The APE's proximity to a drainage increases its potential to be archaeologically sensitive.	Due to disturbance caused by previous culvert construction within the APE it is unlikely that the proposed culvert improvements will impact any cultural resources.
Strevey Lane	This culvert is within an archaeologically sensitive area according to NY-CRIS. In addition, the proposed APE is approximately 700 feet west of an archaeologically surveyed area (16SR00840) which identified both precontact archaeological material and historic architecture (Newkirk-Reese Farm outbuildings). The proposed APE is also	Due to disturbance caused by previous culvert construction within the APE it is unlikely that the proposed culvert improvements will impact any cultural resources.

Table 2
Culvert-Specific Cultural Resources Sensitivity and Potential Project Effects

Culvert Identification	Potential Cultural Resources Sensitivity	Potential Project Effect
	approximately 900 feet east of Schoharie Creek. This area may be categorized as of high potential archaeological sensitivity.	
Shellstone Road	This culvert is not within an archaeologically sensitive area and no historic structures are in the immediate vicinity according to NY-CRIS. However, the proposed APE is located on a tributary of Chuctanunda Creek. This area may be categorized as of high potential archaeological sensitivity.	Due to disturbance caused by previous culvert construction within the APE it is unlikely that the proposed culvert improvements will impact any cultural resources.

1/NRHP = National Register of Historic Places

With this letter, GOSR respectfully submits for your review the attached documentation for the proposed project described herein. GOSR initiated consultation with the New York State Historic Preservation Office and no comments have been received to date. If the Area of Potential Effect encompasses historic properties of religious or cultural significance to your Tribe, please respond within 30 days or sooner. Additionally, please indicate if there are other sources of information or other parties, Nations, Tribes, or members of the public you believe should be included in the consultation process. Please respond by email or in writing to the address listed below.

Alicia Shultz
Bureau of Environmental Review and Assessment
Governor's Office of Storm Recovery
New York State Homes & Community Renewal
38-40 State St.,408N, Hampton Plaza
Albany, NY 12207

I am available to answer any questions that you may have regarding this action. If you have any questions, please feel free to contact me at (518) 474-0647 or via email at Alicia.Shultz@nyshcr.org.

Sincerely,

Alicia Shultz
Senior Environmental Scientist
Bureau of Environmental Review and Assessment
Governor's Office of Storm Recovery

Enclosures:
Project Location Maps
Project Engineering Design Plans

Electronic letter sent to:
Arnold Printup
Saint Regis Mohawk Tribe, THPO
412 State Route 37
Akwesasne, NY 13655

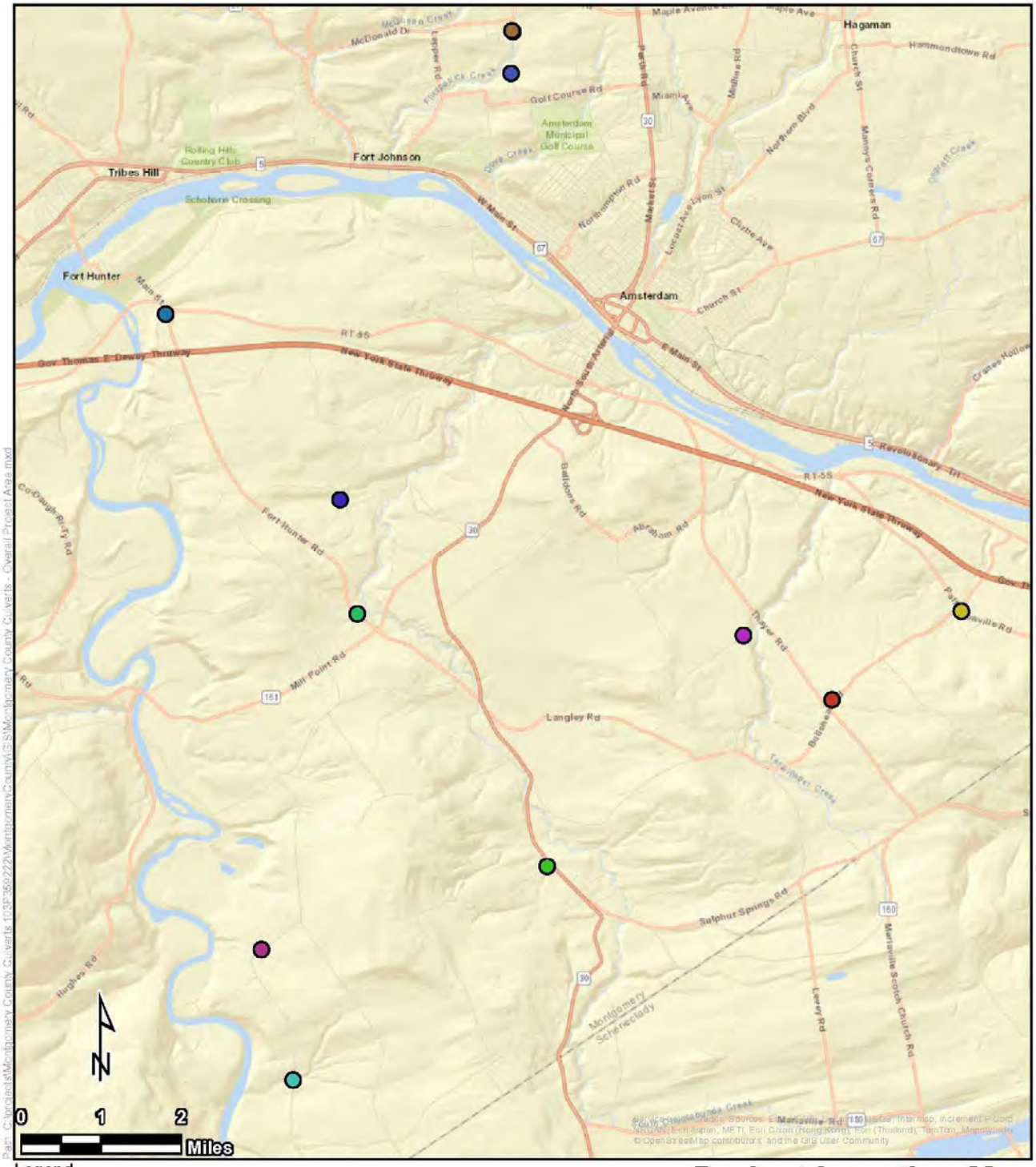

Legend

Culvert Locations

- Bullshead Road
- Fort Hunter Road
- Hartley Road
- Langley Road
- McKay Road 1
- McKay Road 2
- McKinney Road 4A
- McKinney Road 4B
- Pattersonville Road
- Shellstone Road
- Strevy Lane

Tetra Tech, Inc

Project Location Map

Montgomery County Culverts
Bullshead Road, Fort Hunter Road, Hartley Road,
Langley Road, McKay Road, McKinney Road,
Pattersonville Road, Shellstone Road, and Strevy Lane
Montgomery County, New York

Figure 1

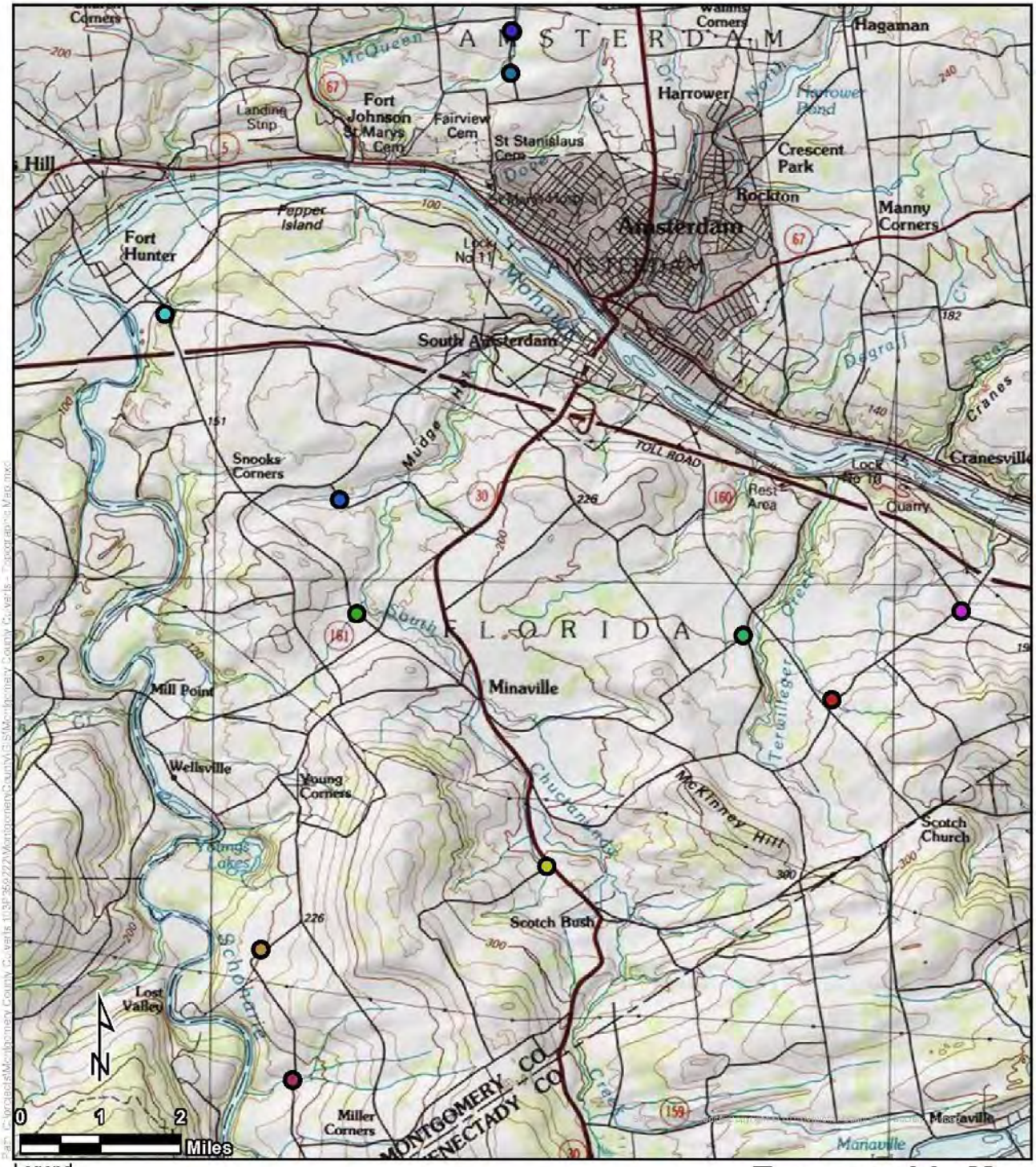

Legend

Culvert Locations

- Bullshead Road
- Fort Hunter Road
- Hartley Road
- Langley Road
- McKay Road 1
- McKay Road 2
- McKinney Road 4A
- McKinney Road 4B
- Pattersonville Road
- Shellstone Road
- Strevy Lane

Tetra Tech, Inc

Topographic Map

Montgomery County Culverts
Bullshead Road, Fort Hunter Road, Hartley Road,
Langley Road, McKay Road, McKinney Road,
Pattersonville Road, Shellstone Road, and Strevy Lane
Montgomery County, New York

Figure 2

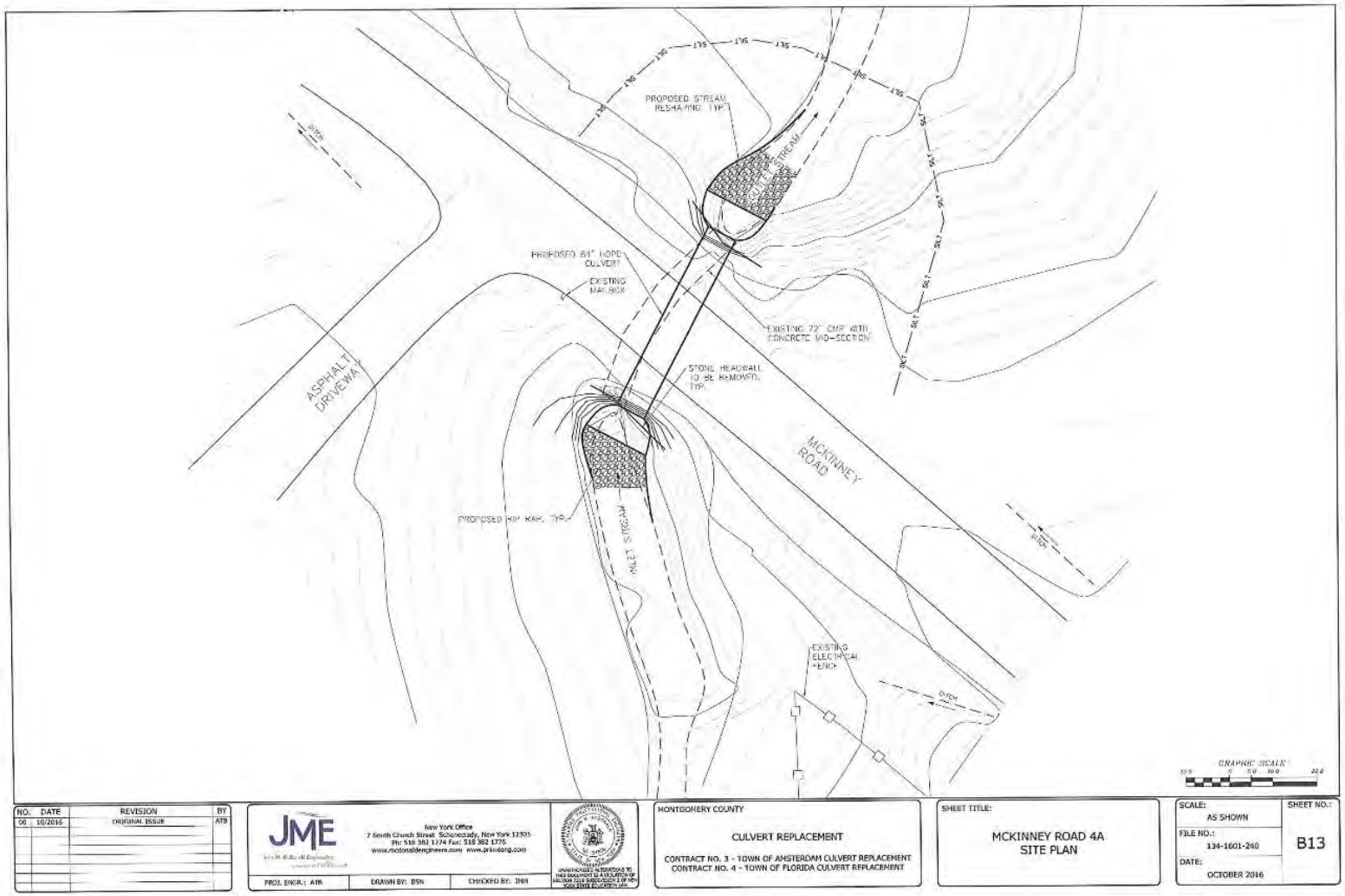
PROPOSED STREAM RESHAPING, TYP.
PROPOSED 84" HDPE CULVERT
EXISTING MAILBOX
EXISTING 72" CMP WITH CONCRETE MID-SECTION
STONE HEADWALL TO BE REMOVED, TYP.
ASPHALT DRIVEWAY
MCKINNEY ROAD
PROPOSED RIP RAP, TYP.
EXISTING ELECTRICAL FENCE
GRAPHIC SCALE
NO. DATE REVISION BY
00 10/2016 ORIGINAL ISSUE ATB
JME
New York Office
7 South Church Street Schenectady, New York 12305
Ph: 518 382 1774 Fax: 518 382 1775
www.mcdonaldengineers.com www.jme-eng.com
PROJ. ENGR.: ATB
DRAWN BY: BSN
CHECKED BY: JMH
MONTGOMERY COUNTY
CULVERT REPLACEMENT
CONTRACT NO. 3 - TOWN OF AMSTERDAM CULVERT REPLACEMENT
CONTRACT NO. 4 - TOWN OF FLORIDA CULVERT REPLACEMENT
SHEET TITLE:
MCKINNEY ROAD 4A
SITE PLAN
SCALE: AS SHOWN
FILE NO.: 134-1601-240
DATE: OCTOBER 2016
SHEET NO.: B13

Figure 3.

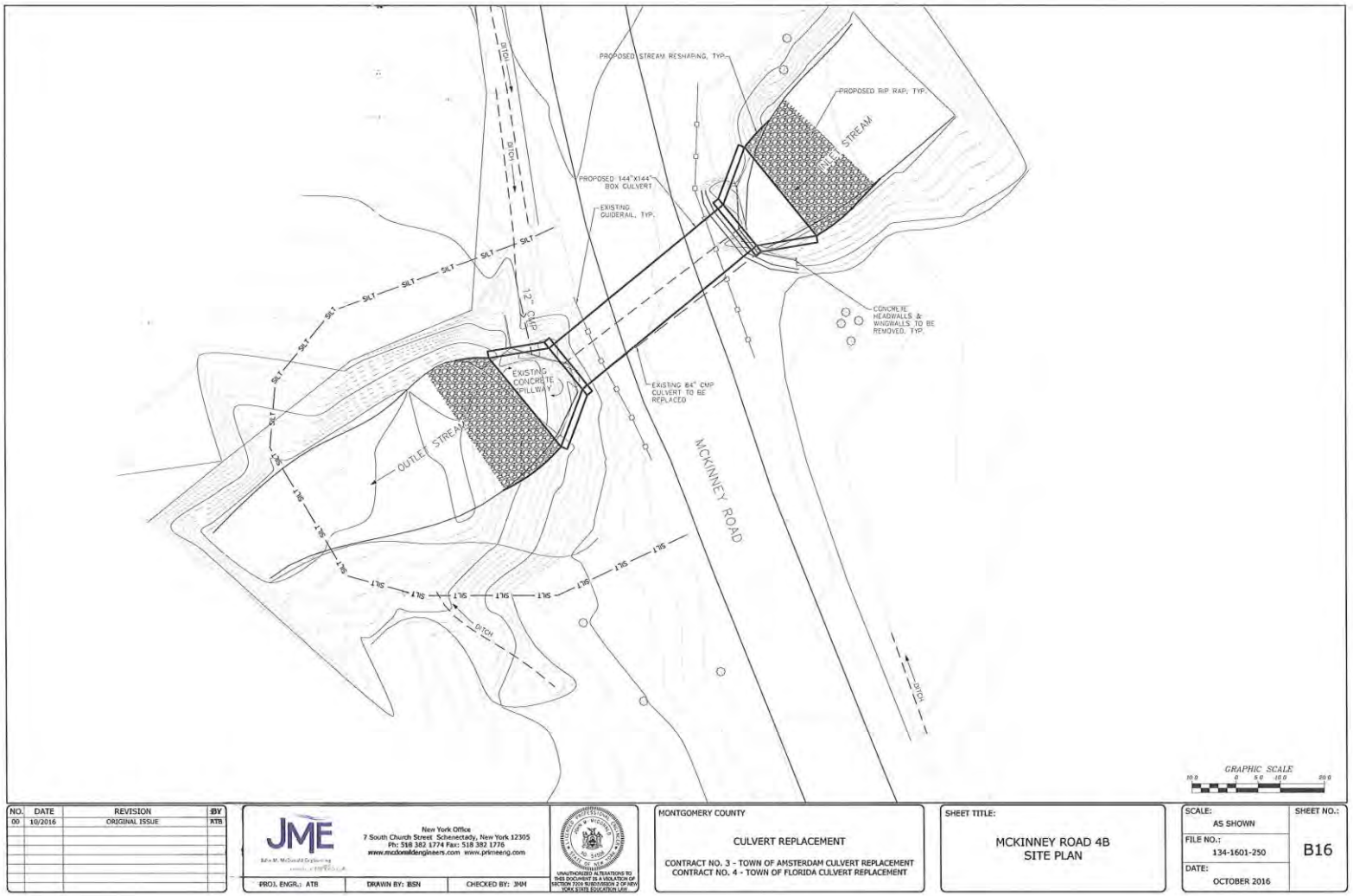
PROPOSED STREAM RESHAPING, TYP.
PROPOSED RIP RAP, TYP.
STREAM
PROPOSED 144"X144" BOX CULVERT
EXISTING GUIDERAIL, TYP.
CONCRETE HEADWALLS & WINGWALLS TO BE REMOVED, TYP.
EXISTING CONCRETE SPILLWAY
EXISTING 84" CMP CULVERT TO BE REPLACED
OUTLET STREAM
MCKINNEY ROAD
DITCH
SILT
GRAPHIC SCALE
NO. DATE REVISION BY
00 10/2016 ORIGINAL ISSUE ATB
JME
New York Office
7 South Church Street Schenectady, New York 12305
Ph: 518 382 1774 Fax: 518 382 1776
www.mcdonaldengineers.com www.primeeng.com
PROJ. ENGR.: ATB
DRAWN BY: BSN
CHECKED BY: JHM
MONTGOMERY COUNTY
CULVERT REPLACEMENT
CONTRACT NO. 3 - TOWN OF AMSTERDAM CULVERT REPLACEMENT
CONTRACT NO. 4 - TOWN OF FLORIDA CULVERT REPLACEMENT
SHEET TITLE:
MCKINNEY ROAD 4B
SITE PLAN
SCALE: AS SHOWN
FILE NO.: 134-1601-250
DATE: OCTOBER 2016
SHEET NO.: B16

Figure 4.

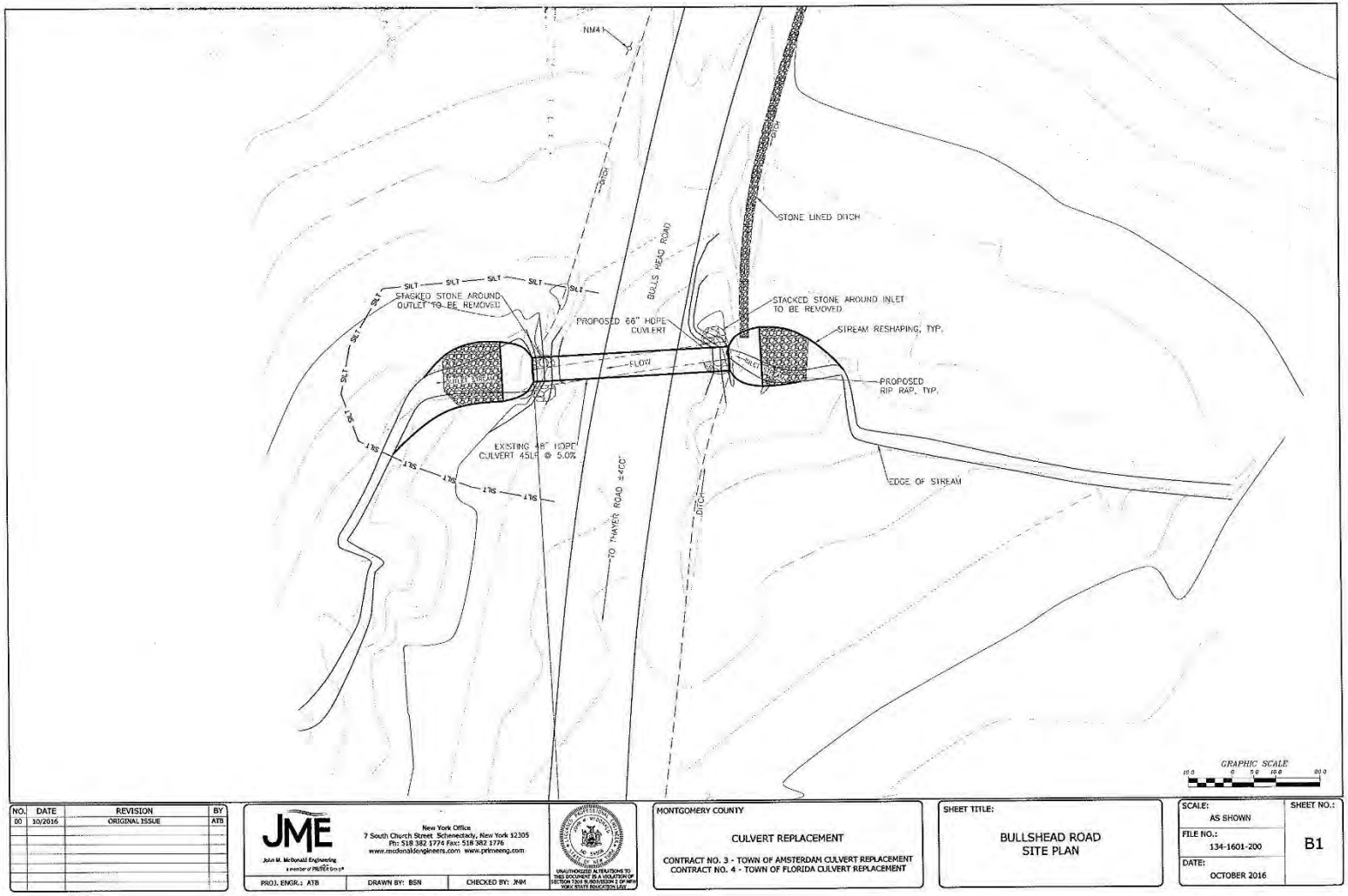
NM4
DITCH
BULLS HEAD ROAD
STONE LINED DITCH
SILT
STACKED STONE AROUND OUTLET TO BE REMOVED
PROPOSED 66" HDPE CULVERT
STACKED STONE AROUND INLET TO BE REMOVED
STREAM RESHAPING, TYP.
FLOW
OUTLET
PROPOSED RIP RAP, TYP.
EXISTING 48" HDPE CULVERT 45LF @ 5.0%
TO THAYER ROAD ±400'
EDGE OF STREAM
GRAPHIC SCALE
NO. DATE REVISION BY
00 10/2016 ORIGINAL ISSUE ATB
JME
John M. McDonald Engineering
New York Office
7 South Church Street Schenectady, New York 12305
Ph: 518 382 1774 Fax: 518 382 1776
www.mcdonaldengineers.com www.primeeng.com
PROJ. ENGR.: ATB
DRAWN BY: BSN
CHECKED BY: JNM
MONTGOMERY COUNTY
CULVERT REPLACEMENT
CONTRACT NO. 3 - TOWN OF AMSTERDAM CULVERT REPLACEMENT
CONTRACT NO. 4 - TOWN OF FLORIDA CULVERT REPLACEMENT
SHEET TITLE:
BULLSHEAD ROAD
SITE PLAN
SCALE: AS SHOWN
FILE NO.: 134-1601-200
DATE: OCTOBER 2016
SHEET NO.: B1

Figure 5.

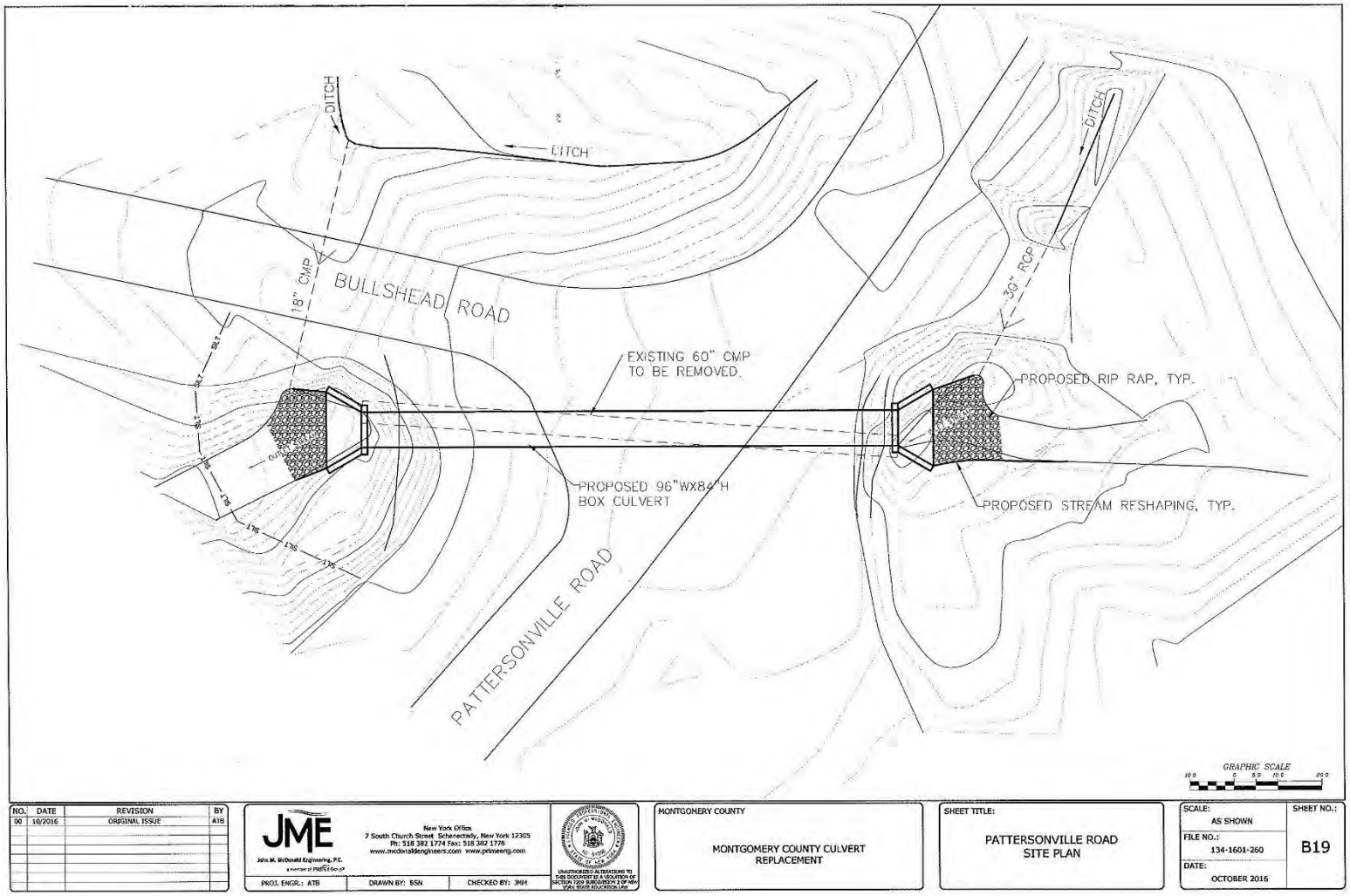
DITCH
DITCH
DITCH
18" CMP
BULLSHEAD ROAD
30" RCP
EXISTING 60" CMP
TO BE REMOVED
PROPOSED RIP RAP, TYP.
PROPOSED 96"WX84"H
BOX CULVERT
PROPOSED STREAM RESHAPING, TYP.
PATTERSONVILLE ROAD
GRAPHIC SCALE
NO. DATE REVISION BY
00 10/2016 ORIGINAL ISSUE ATB
JME
John M. McDonald Engineering, P.C.
New York Office
7 South Church Street Schenectady, New York 12305
Ph: 518 382 1774 Fax: 518 382 1776
www.mcdonaldengineers.com www.primeeng.com
PROJ. ENGR.: ATB
DRAWN BY: BSN
CHECKED BY: JNM
MONTGOMERY COUNTY
MONTGOMERY COUNTY CULVERT
REPLACEMENT
SHEET TITLE:
PATTERSONVILLE ROAD
SITE PLAN
SCALE:
AS SHOWN
FILE NO.:
134-1601-260
DATE:
OCTOBER 2016
SHEET NO.:
B19

Figure 6.

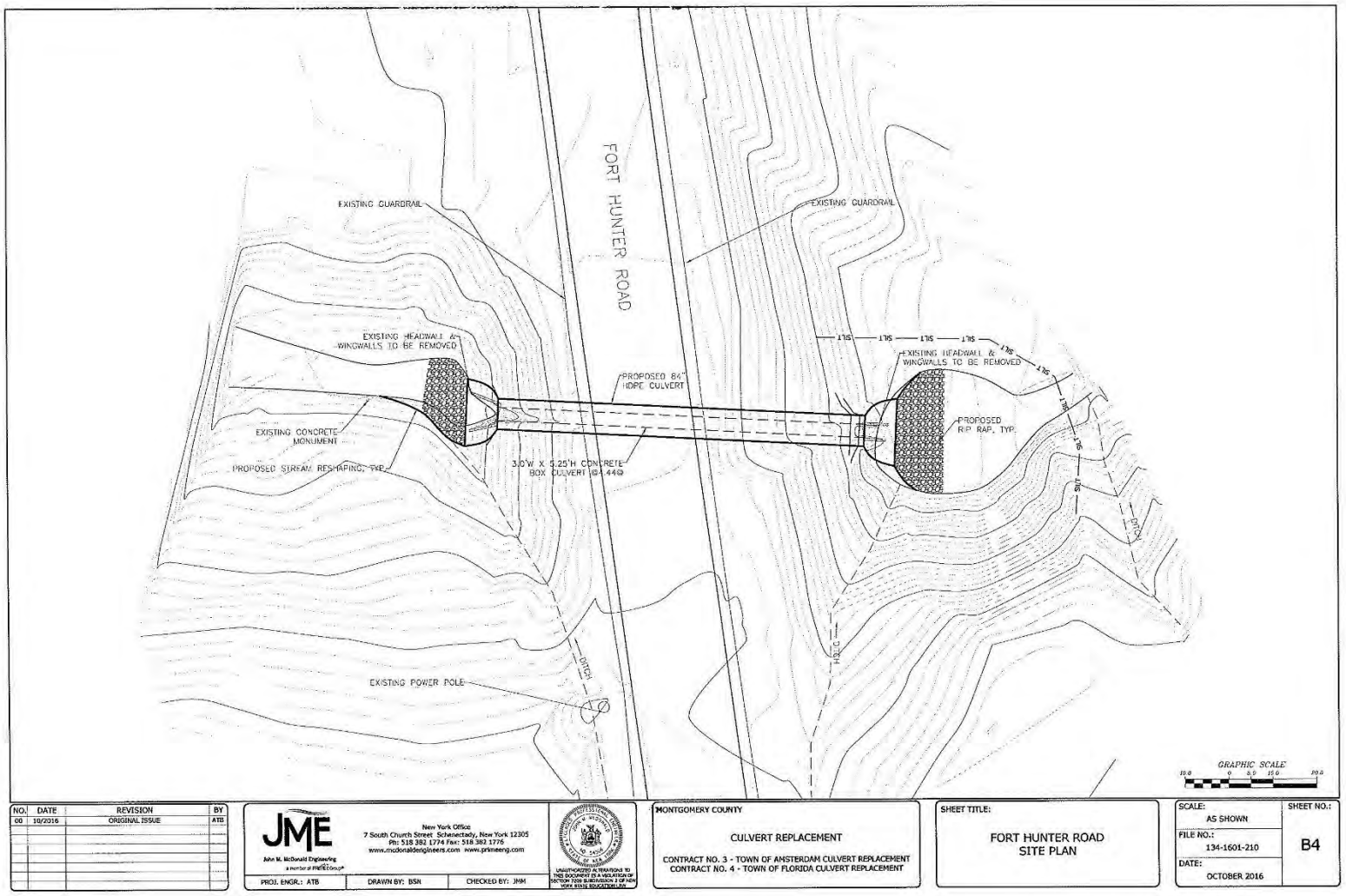
FORT HUNTER ROAD
EXISTING GUARDRAIL
EXISTING GUARDRAIL
EXISTING HEADWALL & WINGWALLS TO BE REMOVED
EXISTING HEADWALL & WINGWALLS TO BE REMOVED
PROPOSED 84" HDPE CULVERT
EXISTING CONCRETE MONUMENT
PROPOSED STREAM RESHAPING, TYP.
3.0'W X 6.25'H CONCRETE BOX CULVERT @ 44@
PROPOSED RIP RAP, TYP.
EXISTING POWER POLE
DITCH
DITCH
GRAPHIC SCALE
NO. DATE REVISION BY
00 10/2016 ORIGINAL ISSUE ATB
JME
John M. McDonald Engineering
New York Office
7 South Church Street Schenectady, New York 12305
Ph: 518 382 1774 Fax: 518 382 1776
www.mcdonaldengineers.com www.prkmeeng.com
PROJ. ENGR.: ATB
DRAWN BY: BSN
CHECKED BY: JMM
MONTGOMERY COUNTY
CULVERT REPLACEMENT
CONTRACT NO. 3 - TOWN OF AMSTERDAM CULVERT REPLACEMENT
CONTRACT NO. 4 - TOWN OF FLORIDA CULVERT REPLACEMENT
SHEET TITLE:
FORT HUNTER ROAD
SITE PLAN
SCALE:
AS SHOWN
FILE NO.:
134-1601-210
DATE:
OCTOBER 2016
SHEET NO.:
B4

Figure 7.

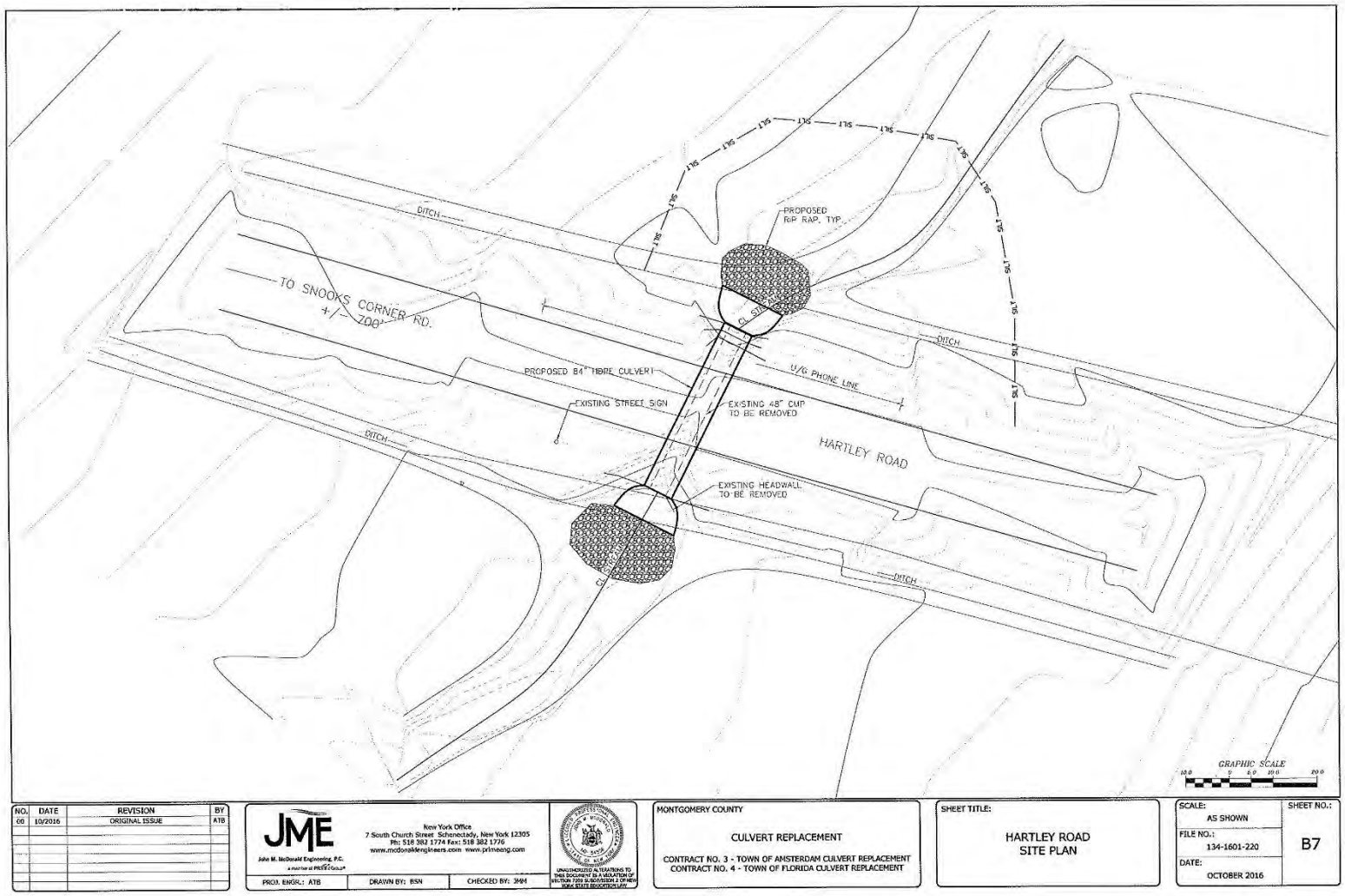
DITCH
TO SNOOKS CORNER RD.
+/- 700'
PROPOSED RIP RAP, TYP.
PROPOSED 84" HDPE CULVERT
EXISTING STREET SIGN
U/G PHONE LINE
EXISTING 48" CMP TO BE REMOVED
HARTLEY ROAD
EXISTING HEADWALL TO BE REMOVED
SILT
GRAPHIC SCALE
NO. DATE REVISION BY
00 10/2016 ORIGINAL ISSUE ATB
JME
John M. McDonald Engineering, P.C.
New York Office
7 South Church Street Schenectady, New York 12305
Ph: 518 382 1774 Fax: 518 382 1776
www.mcdonaldengineers.com www.primeeng.com
PROJ. ENGR.: ATB
DRAWN BY: BSN
CHECKED BY: JMM
MONTGOMERY COUNTY
CULVERT REPLACEMENT
CONTRACT NO. 3 - TOWN OF AMSTERDAM CULVERT REPLACEMENT
CONTRACT NO. 4 - TOWN OF FLORIDA CULVERT REPLACEMENT
SHEET TITLE:
HARTLEY ROAD
SITE PLAN
SCALE:
AS SHOWN
FILE NO.:
134-1601-220
DATE:
OCTOBER 2016
SHEET NO.:
B7

Figure 8.

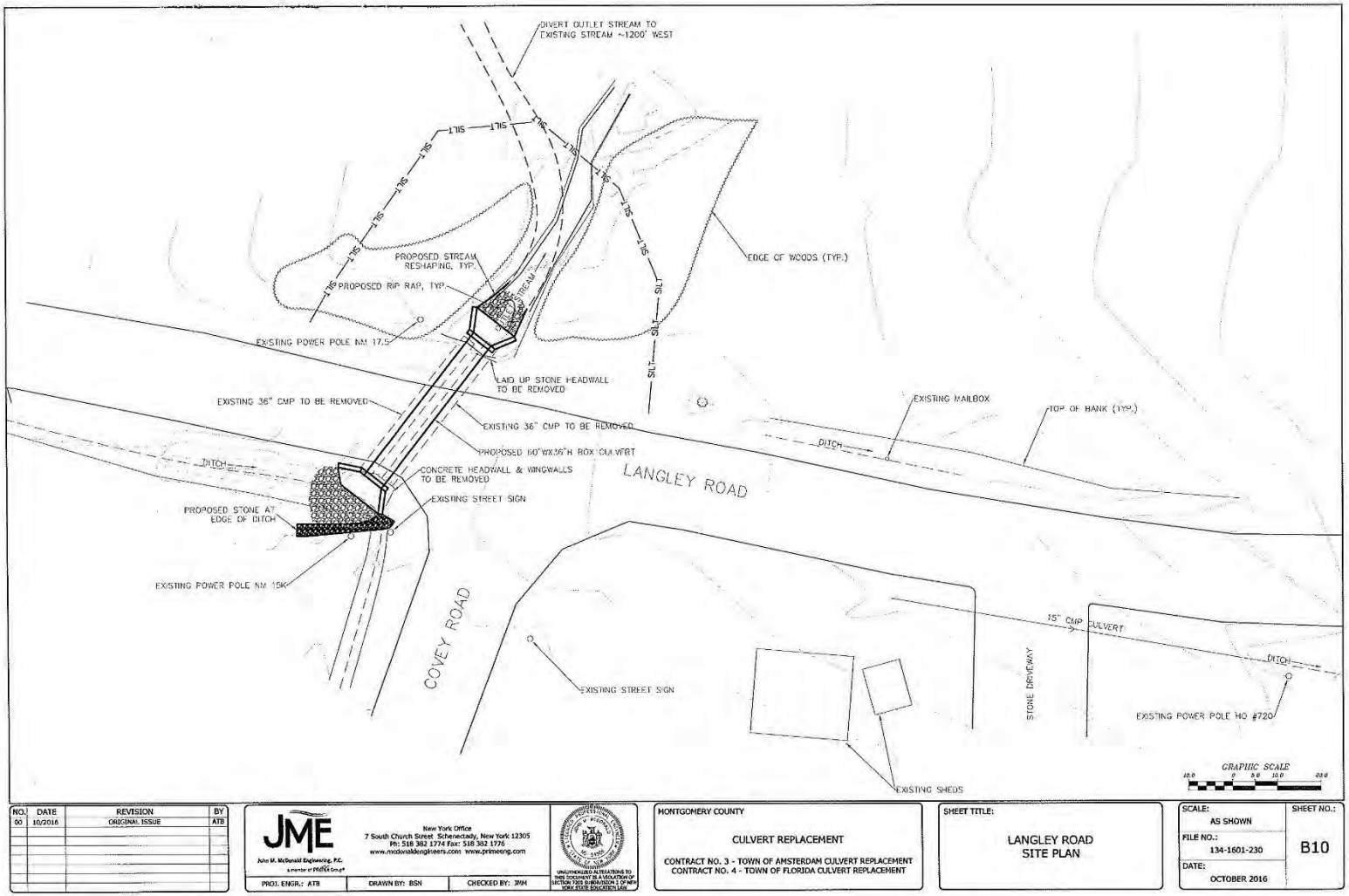
DIVERT OUTLET STREAM TO EXISTING STREAM ~1200' WEST
EDGE OF WOODS (TYP.)
PROPOSED STREAM RESHAPING, TYP.
PROPOSED RIP RAP, TYP.
EXISTING POWER POLE NM 17.5
LAID UP STONE HEADWALL TO BE REMOVED
EXISTING 36" CMP TO BE REMOVED
EXISTING 36" CMP TO BE REMOVED
PROPOSED 60"WX36"H BOX CULVERT
CONCRETE HEADWALL & WINGWALLS TO BE REMOVED
EXISTING STREET SIGN
PROPOSED STONE AT EDGE OF DITCH
EXISTING POWER POLE NM 15K
DITCH
LANGLEY ROAD
COVEY ROAD
EXISTING MAILBOX
TOP OF BANK (TYP.)
15" CMP CULVERT
STONE DRIVEWAY
EXISTING POWER POLE HO #720
EXISTING SHEDS
GRAPHIC SCALE
NO. DATE REVISION BY
00 10/2016 ORIGINAL ISSUE ATB
JME
John M. McDonald Engineering, P.C.
New York Office
7 South Church Street Schenectady, New York 12305
Ph: 518 382 1774 Fax: 518 382 1776
www.mcdonaldengineers.com www.primeeng.com
PROJ. ENGR.: ATB
DRAWN BY: BSN
CHECKED BY: JNM
MONTGOMERY COUNTY
CULVERT REPLACEMENT
CONTRACT NO. 3 - TOWN OF AMSTERDAM CULVERT REPLACEMENT
CONTRACT NO. 4 - TOWN OF FLORIDA CULVERT REPLACEMENT
SHEET TITLE:
LANGLEY ROAD SITE PLAN
SCALE: AS SHOWN
FILE NO.: 134-1601-230
DATE: OCTOBER 2016
SHEET NO.: B10

Figure 9.

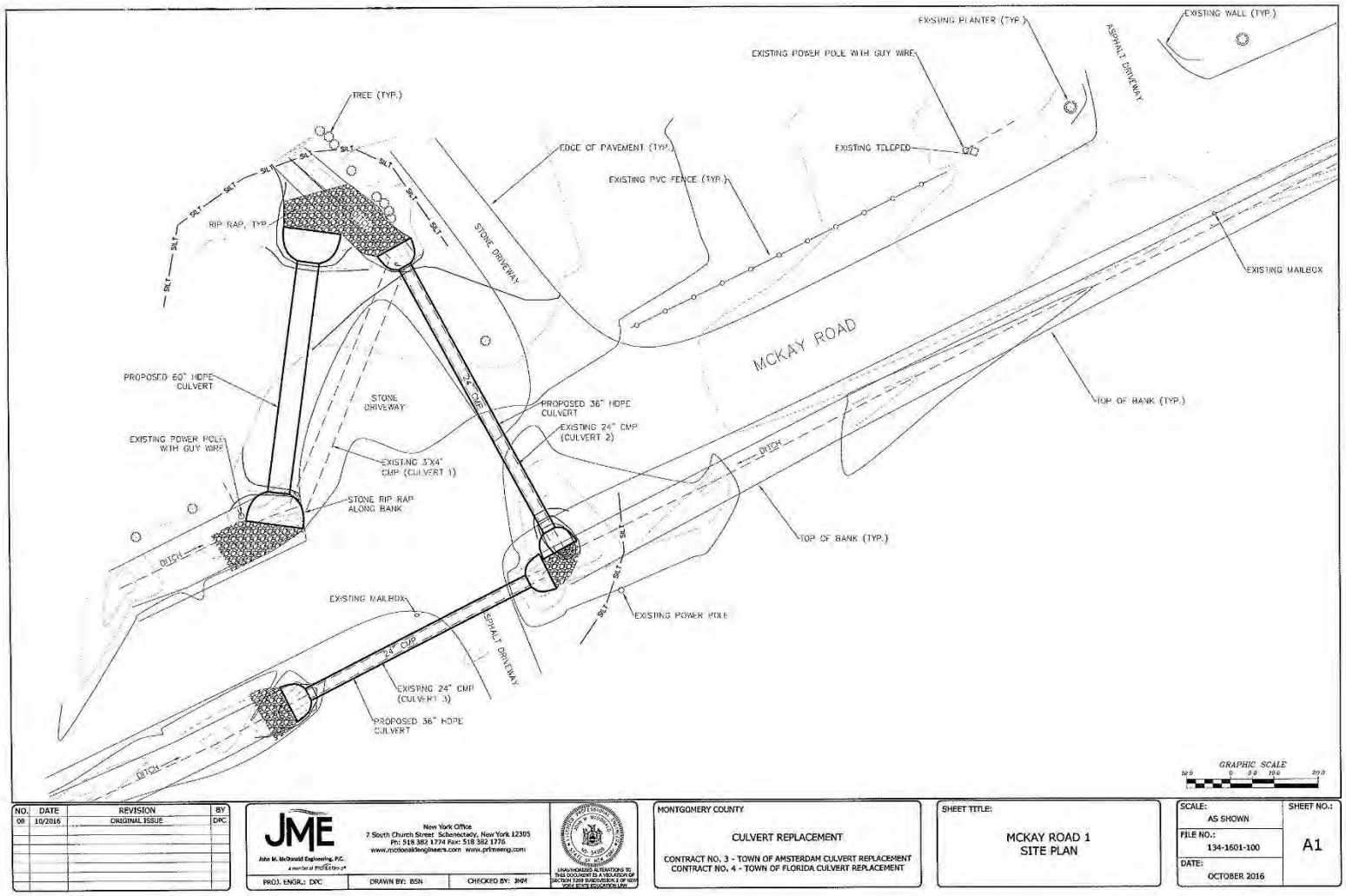
EXISTING PLANTER (TYP.)
EXISTING WALL (TYP.)
EXISTING POWER POLE WITH GUY WIRE
ASPHALT DRIVEWAY
TREE (TYP.)
EDGE OF PAVEMENT (TYP.)
EXISTING TELEPED
EXISTING PVC FENCE (TYP.)
RIP RAP, TYP.
STONE DRIVEWAY
EXISTING MAILBOX
MCKAY ROAD
PROPOSED 60" HDPE CULVERT
STONE DRIVEWAY
24" CMP
PROPOSED 36" HDPE CULVERT
EXISTING 24" CMP (CULVERT 2)
TOP OF BANK (TYP.)
EXISTING POWER POLE WITH GUY WIRE
EXISTING 3'X4' CMP (CULVERT 1)
DITCH
STONE RIP RAP ALONG BANK
TOP OF BANK (TYP.)
DITCH
EXISTING MAILBOX
EXISTING POWER POLE
ASPHALT DRIVEWAY
24" CMP
EXISTING 24" CMP (CULVERT 3)
PROPOSED 36" HDPE CULVERT
DITCH
GRAPHIC SCALE
NO. DATE REVISION BY
00 10/2016 ORIGINAL ISSUE DPC
JME
John M. McDonald Engineering, P.C.
New York Office
7 South Church Street Schenectady, New York 12305
Ph: 518 382 1774 Fax: 518 382 1776
www.mcdonaldengineers.com www.primeeng.com
PROJ. ENGR.: DPC
DRAWN BY: BSN
CHECKED BY: JMM
MONTGOMERY COUNTY
CULVERT REPLACEMENT
CONTRACT NO. 3 - TOWN OF AMSTERDAM CULVERT REPLACEMENT
CONTRACT NO. 4 - TOWN OF FLORIDA CULVERT REPLACEMENT
SHEET TITLE:
MCKAY ROAD 1
SITE PLAN
SCALE: AS SHOWN
SHEET NO.: A1
FILE NO.: 134-1601-100
DATE: OCTOBER 2016

Figure 10.

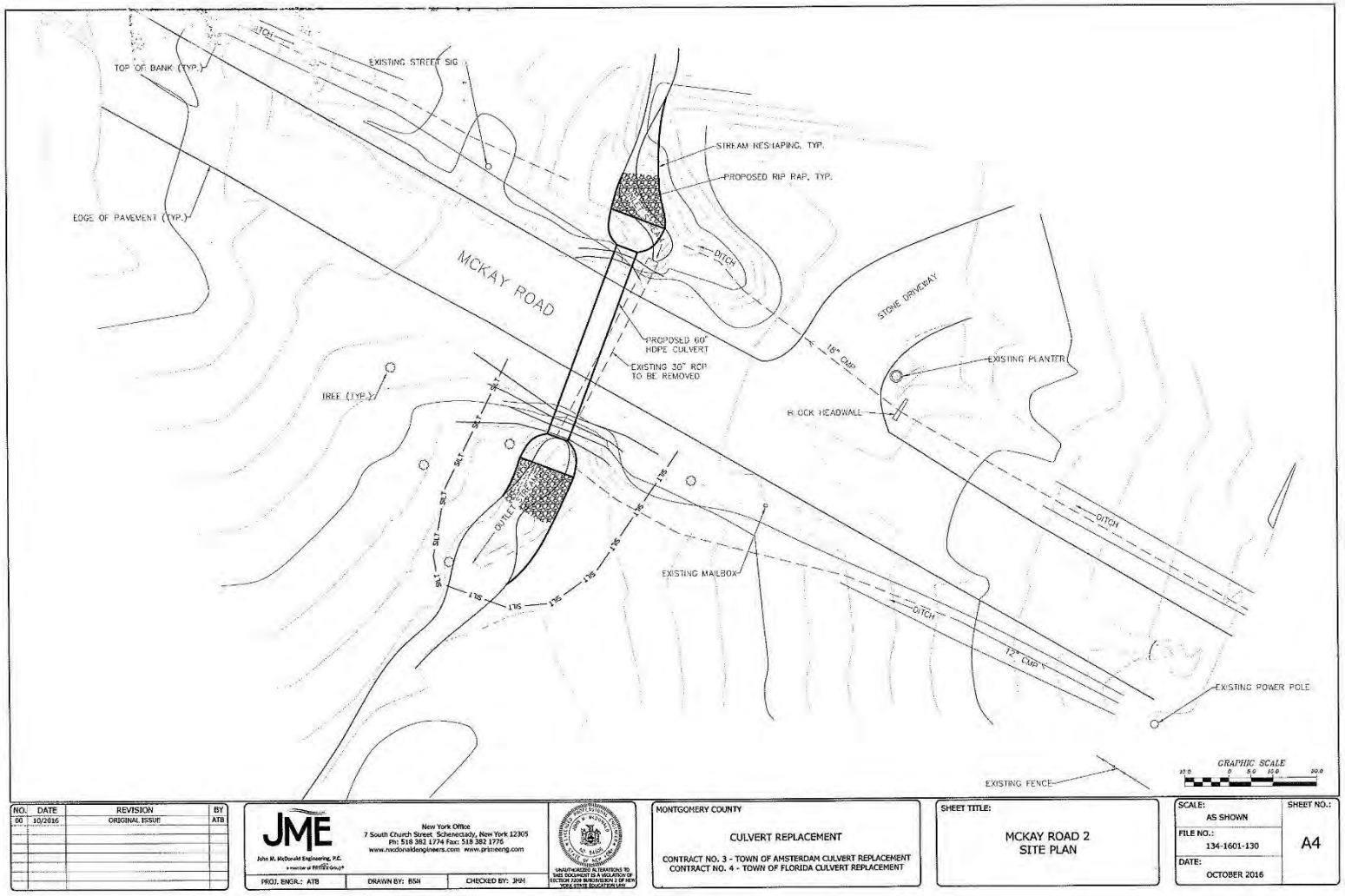
TOP OF BANK (TYP.)
EXISTING STREET SIG
STREAM RESHAPING, TYP.
PROPOSED RIP RAP, TYP.
EDGE OF PAVEMENT (TYP.)
MCKAY ROAD
DITCH
STONE DRIVEWAY
PROPOSED 60" HDPE CULVERT
EXISTING 30" RCP TO BE REMOVED
18" CMP
EXISTING PLANTER
TREE (TYP.)
BLOCK HEADWALL
OUTLET PROTECTION
EXISTING MAILBOX
DITCH
DITCH
12" CMP
EXISTING POWER POLE
EXISTING FENCE
GRAPHIC SCALE
NO. DATE REVISION BY
00 10/2016 ORIGINAL ISSUE ATB
JME
John M. McDonald Engineering, P.C.
New York Office
7 South Church Street, Schenectady, New York 12305
Ph: 518 382 1774 Fax: 518 382 1776
www.mcdonaldengineers.com www.primeeng.com
PROJ. ENGR.: ATB
DRAWN BY: BSH
CHECKED BY: JNM
MONTGOMERY COUNTY
CULVERT REPLACEMENT
CONTRACT NO. 3 - TOWN OF AMSTERDAM CULVERT REPLACEMENT
CONTRACT NO. 4 - TOWN OF FLORIDA CULVERT REPLACEMENT
SHEET TITLE:
MCKAY ROAD 2
SITE PLAN
SCALE: AS SHOWN
FILE NO.: 134-1601-130
DATE: OCTOBER 2016
SHEET NO.: A4

Figure 11.

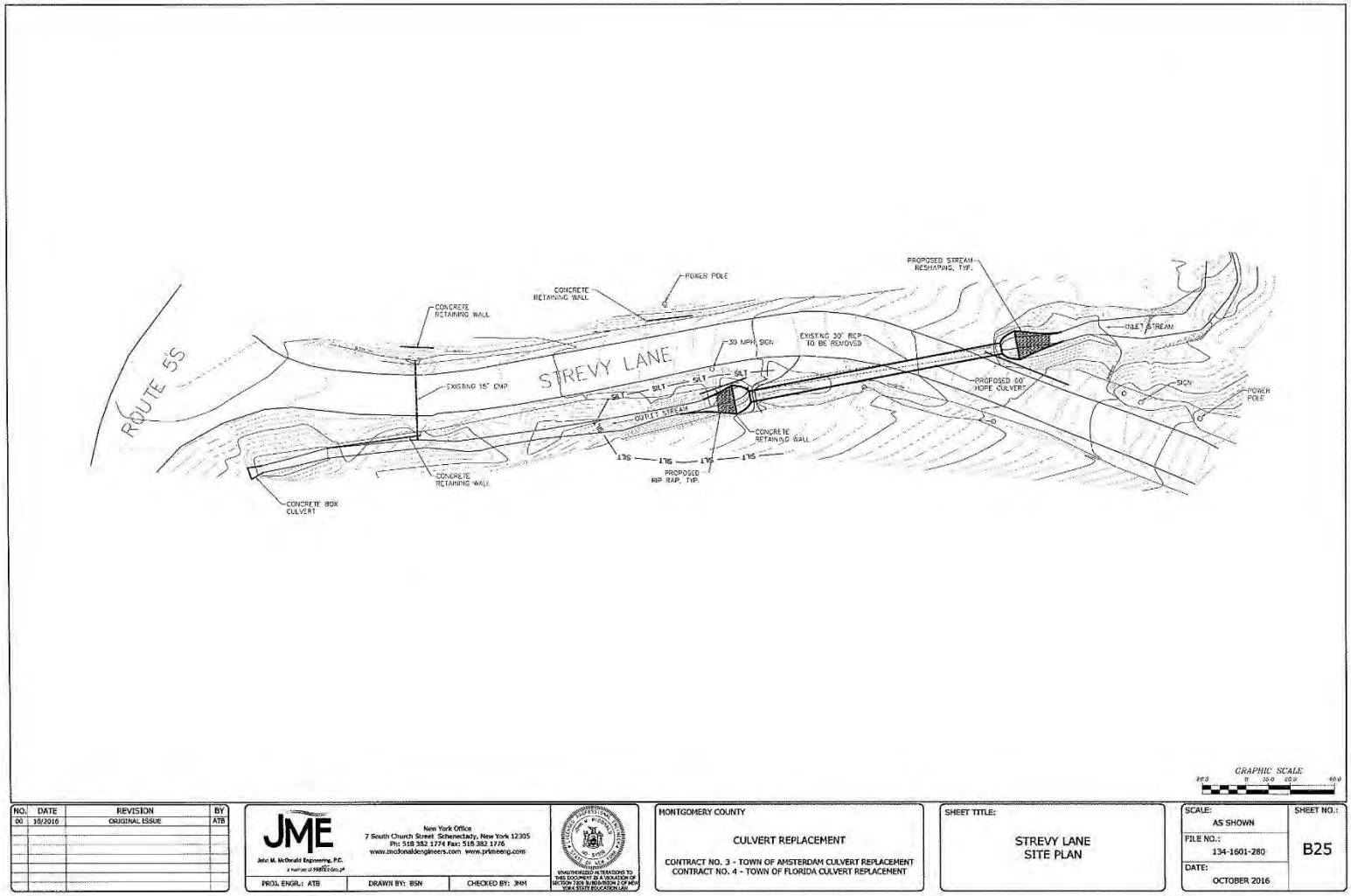
ROUTE 5S
STREVY LANE
CONCRETE RETAINING WALL
POWER POLE
PROPOSED STREAM RESHAPING, TYP.
30 MPH SIGN
EXISTING 30" RCP TO BE REMOVED
INLET STREAM
EXISTING 15" CMP
PROPOSED 60" HDPE CULVERT
SIGN
POWER POLE
SILT
OUTLET STREAM
CONCRETE RETAINING WALL
PROPOSED RIP RAP, TYP.
CONCRETE BOX CULVERT
GRAPHIC SCALE
NO. DATE REVISION BY
00 10/2016 ORIGINAL ISSUE ATB
JME
John M. McDonald Engineering, P.C.
New York Office
7 South Church Street Schenectady, New York 12305
Ph: 518 382 1774 Fax: 518 382 1776
www.mcdonaldengineers.com www.primeeng.com
PROJ. ENGR.: ATB
DRAWN BY: BSN
CHECKED BY: JMM
MONTGOMERY COUNTY
CULVERT REPLACEMENT
CONTRACT NO. 3 - TOWN OF AMSTERDAM CULVERT REPLACEMENT
CONTRACT NO. 4 - TOWN OF FLORIDA CULVERT REPLACEMENT
SHEET TITLE:
STREVY LANE
SITE PLAN
SCALE:
AS SHOWN
FILE NO.:
134-1601-280
DATE:
OCTOBER 2016
SHEET NO.:
B25

Figure 12.

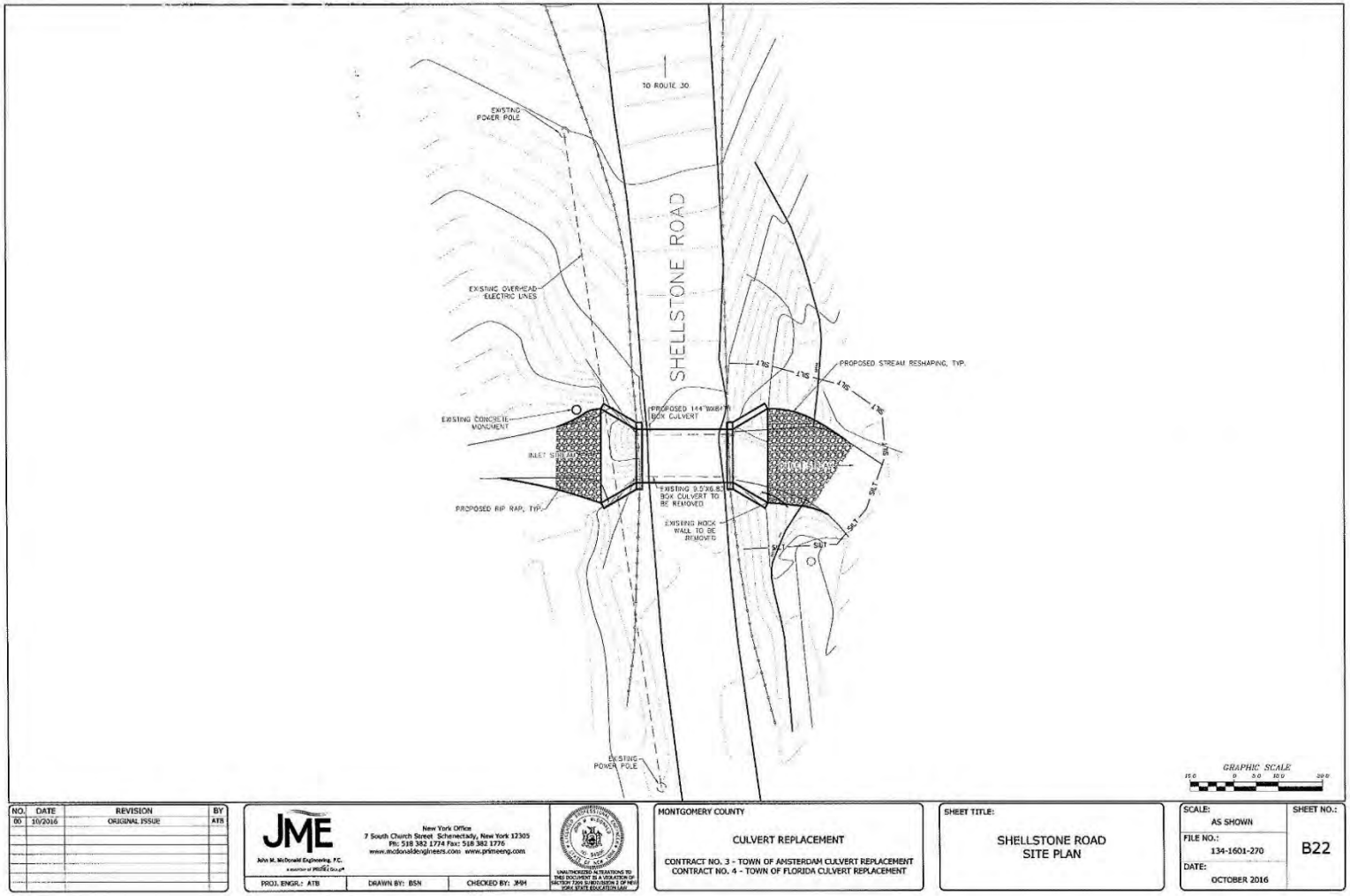
TO ROUTE 30
EXISTING POWER POLE
SHELLSTONE ROAD
EXISTING OVERHEAD ELECTRIC LINES
PROPOSED STREAM RESHAPING, TYP.
EXISTING CONCRETE MONUMENT
PROPOSED 144"W(8'H) BOX CULVERT
INLET STREAM
EXISTING 9.5'X6.5' BOX CULVERT TO BE REMOVED
PROPOSED RIP RAP, TYP.
EXISTING ROCK WALL TO BE REMOVED
EXISTING POWER POLE
GRAPHIC SCALE
NO. DATE REVISION BY
00 10/2016 ORIGINAL ISSUE ATB
JME
John M. McDonald Engineering, P.C.
New York Office
7 South Church Street Schenectady, New York 12305
Ph: 518 382 1774 Fax: 518 382 1776
www.mcdonaldengineers.com www.primeeng.com
PROJ. ENGR.: ATB
DRAWN BY: BSN
CHECKED BY: JMM
MONTGOMERY COUNTY
CULVERT REPLACEMENT
CONTRACT NO. 3 - TOWN OF AMSTERDAM CULVERT REPLACEMENT
CONTRACT NO. 4 - TOWN OF FLORIDA CULVERT REPLACEMENT
SHEET TITLE:
SHELLSTONE ROAD
SITE PLAN
SCALE:
AS SHOWN
FILE NO.:
134-1601-270
DATE:
OCTOBER 2016
SHEET NO.:
B22

Figure 13.

APPENDIX E

WETLANDS

SUMMARY OF 5-STEP WETLAND ANALYSIS FOR THE MONTGOMERY COUNTY CULVERT REPLACEMENT PROJECT TOWNS OF FLORIDA AND AMSTERDAM, MONTGOMERY COUNTY, NEW YORK

Governor's Office of Storm Recovery
U.S. Department of Housing and Urban Development Community Development Block Grant – Disaster Recovery

Below is a summary of the analysis conducted in accordance with 24 CFR Part 55 (Floodplain Management and Protection of Wetlands) and Executive Orders 11988 (Floodplain Management).

Pursuant to 24 CFR §55.12(a)(4), steps 2, 3, and 7 of the 8-step process for floodplain management do not apply to projects involving the improvement of existing nonresidential buildings and structures, in communities that are in the Regular Program of the National Flood Insurance Program (NFIP) and are in good standing, provided that the action does not meet the thresholds for "substantial improvement" under §55.2(b)(10) and that the footprint of the structure and paved areas is not significantly increased. The project involves replacement of 11 existing undersized culverts in the Town of Florida and the Town of Amsterdam. The culverts convey waterways beneath McKinney Road, Bullshead Road, Pattersonville Road, Hunter Road, Hartley Road, Strevy Lane, and Shellstone Road in the Town of Florida and McKay Road in the Town of Amsterdam (see **Figure 1**). The project is designed to reduce flooding and mitigate stream bank and roadway erosion that may result from rainfall that could not be accommodated by the existing undersized culverts. The smaller culverts would be made of high density polyethylene (HDPE). Many of the smaller culverts are in ditches rather than streams. Four sided precast concrete box culverts would be used for the larger culverts. It is anticipated that construction would involve substantial earthwork, which would occur within the existing rights-of-way of each road. Each culvert would exceed the carrying capacity for a 50-year storm event. Each culvert bottom would be filled to an appropriate depth with natural streambed material (embedment). Because the project is a functionally dependent use and would represent a minor improvement, steps 2, 3, and 7 do not apply.

Step 1: Determine if the proposed action is in a wetland.

The culverts at Fort Hunter Road, Bullshead Road, Pattersonville Road, Shellstone Road, and Strevy Lane are in riverine wetlands, as identified National Wetlands Inventory (NWI). The culvert at Fort Hunter Road is within 300 feet of freshwater regulatory wetlands identified by NYSDEC (see **Figures 2, 3, 4, 5, and 6**). The Project would involve on-site disturbances of wetlands, as defined by 24 CFR §55.2(b)(11). Wetlands are defined as areas that are inundated by surface or ground water with a frequency sufficient to support, and under normal circumstances does or would support, a prevalence of vegetative or aquatic life that requires saturated or seasonally saturated soil conditions for growth and reproduction. Examples generally include swamps, marshes, bogs, and similar areas such as sloughs, potholes, wet meadows, river overflows, mud flats, and natural ponds. This definition includes those wetland areas separated from their natural supply of water as a result of activities such as the construction of structural flood protection methods or solid-fill road beds and activities such as mineral extraction and navigation improvements. The streams associated with each culvert are

classified by NYSDEC as Class C (waters supporting fisheries and suitable for non-contact activities) (see **Figures 2, 3, 4, 5, 6, and 7**), and are covered by this definition of a wetland. This 5-step analysis is provided for each of these project sites because an improvement of existing nonresidential buildings and structures that does not meet the thresholds for "substantial improvement" under §55.2(b)(10) and where the footprint of the structure and paved areas is not significantly increased.

Step 4: Identify and describe the proposed action's direct and indirect effects associated with activities within a wetland.

The wetlands that would be temporarily disturbed by construction of the project have been previously disturbed by construction of the roads and the existing culverts beneath the roads. The flow of the waterways and the associated wetlands are already modified by the existing culverts at each of these locations. Each of these culvert replacements would include stream reshaping and placement of rip-rap in the stream channel at each end of the culverts. This material would continue to allow infiltration and flow of the waterways. The majority of additional disturbance to the wetlands as a result of the project would be temporary, and the total area of wetland disturbance for each, including the area of installed rip-rap, would be below the one-acre threshold for recommended appropriate and practicable compensatory mitigation for unavoidable adverse impacts. The project would not alter the survival and quality of the wetlands.

Step 5: Identify methods to minimize the potential adverse impacts within a wetland and to restore and preserve the natural and beneficial values.

Because the Project is a replacement of the existing culverts that convey streams beneath McKinney Road, Bullshead Road, Pattersonville Road, Hunter Road, Hartley Road, Strevy Lane, and Shellstone Road, the new culverts must be located in the same portions these streams. Addressing the stream flows from storm water from a 100-year flood, reducing flooding, and mitigating roadway and stream bank erosion in these locations inherently requires work within the streams and wetlands along the stream corridor. There are no alternatives that do not involve work in these areas.

A dewatering plan for each culvert has been designed to maintain the clarity of the water downstream of the work area at the same level as the clarity of the water upstream of the work area. Precautions would be taken during construction to preclude contamination of the waterway by suspended solids, sediments, turbid waters or any other environmentally deleterious materials. Excavated soil will be properly retained and covered to avoid runoff. The work areas would be isolated from flowing water, and water retained upstream of the work areas would be filtered before being returned to the waterway. All unused excavated material and construction debris will be removed to a minimum of 100 feet from each waterway upon completion of construction of each culvert.

The disturbance to the streams and wetlands would not alter the survival and quality of the wetlands.

Step 6: Reevaluate the proposed action to determine if it is still practicable given its wetland effects.

Implementing this project would reduce flooding and mitigate stream bank and roadway erosion that may result from rainfall that could not be accommodated by the existing undersized culverts.

No changes in land use or impervious surface would occur as a result of the project that would affect the NWI wetlands, NYSDEC wetland buffer, or streams conveyed by the culverts in the long term. As a result, the proposed action is still practicable.

Step 8: The proposed action can be implemented after the above steps have been completed.

Implementation of the proposed action may require additional local and state permits, which could place additional design modifications or mitigation requirements on the project. A joint application for disturbance of streams was submitted to the NYSDEC and the US Army Corps of Engineers. The Project will adhere to all applicable conditions noted in the permit.

Path: C:\projects\Montgomery County Culverts 109P359222\MontgomeryCounty\GIS\Montgomery County Culverts - Topographic Map.mxd

Legend

Culvert Locations

- Bullshead Road
- Fort Hunter Road
- Hartley Road
- Langley Road
- McKay Road 1
- McKay Road 2
- McKinney Road 4A
- McKinney Road 4B
- Pattersonville Road
- Shellstone Road
- Strevy Lane

Tetra Tech, Inc

Topographic Map

Montgomery County Culverts
Bullshead Road, Fort Hunter Road, Hartley Road, Langley Road, McKay Road, McKinney Road, Pattersonville Road, Shellstone Road, and Strevy Lane
Montgomery County, New York

Figure 1

Path: C:\projects\Montgomery County Culverts 103P359222\MontgomeryCountyGIS\Montgomery County Culverts - Freshwater Wetlands2.mxd

Legend

Culvert Locations

- Fort Hunter Road
- Hartley Road
- NYS Freshwater Wetlands
- NYS Freshwater Wetlands Buffer

NWI Wetlands

- Freshwater Pond
- Riverine

Freshwater Wetlands

Montgomery County Culverts
Fort Hunter Road, Hartley Road
Montgomery County, New York

Tetra Tech, Inc

Figure 2

Path: C:\projects\Montgomery County Culverts 103P359222\MontgomeryCountyGIS\Montgomery County Culverts - Freshwater Wetlands3.mxd

Legend

Culvert Locations

- Bullshead Road
- Langley Road
- Pattersonville Road

- NYS Freshwater Wetlands
- NYS Freshwater Wetlands Buffer

NWI Wetlands

- Freshwater Pond
- Riverine

Freshwater Wetlands

Montgomery County Culverts
Bullshead Road,
Langley Road, Pattersonville Road
Montgomery County, New York

Tetra Tech, Inc

Figure 3

Path: C:\projects\Montgomery County Culverts 103P359222\MontgomeryCountyVGIS\Montgomery County Culverts - Freshwater Wetlands4.mxd

Legend

Culvert Locations

- Shellstone Road
- NYS Freshwater Wetlands
- NYS Freshwater Wetlands Buffer

NWI Wetlands

- Freshwater Pond
- Riverine

Freshwater Wetlands

Montgomery County Culverts
Shellstone Road
Montgomery County, New York

Tetra Tech, Inc

Figure 4

Path: C:\projects\Montgomery County Culverts 103P359222\MontgomeryCounty\GIS\Montgomery County Culverts - Freshwater Wetlands5.mxd

Legend

Culvert Locations

- McKinney Road 4A
- McKinney Road 4B
- NYS Freshwater Wetlands
- NYS Freshwater Wetlands Buffer

NWI Wetlands

- Riverine

Freshwater Wetlands

Montgomery County Culverts
McKinney Road
Montgomery County, New York

Tetra Tech, Inc

Figure 5

Path: C:\projects\Montgomery County Culverts 103P359222\MontgomeryCountyVGIS\Montgomery County Culverts - Freshwater Wetlands6.mxd

Legend

Culvert Locations

- Strevy Lane
- NYS Freshwater Wetlands
- NYS Freshwater Wetlands Buffer

NWI Wetlands

- Riverine

Freshwater Wetlands

Montgomery County Culverts
Strevy Lane
Montgomery County, New York

Tetra Tech, Inc

Figure 6

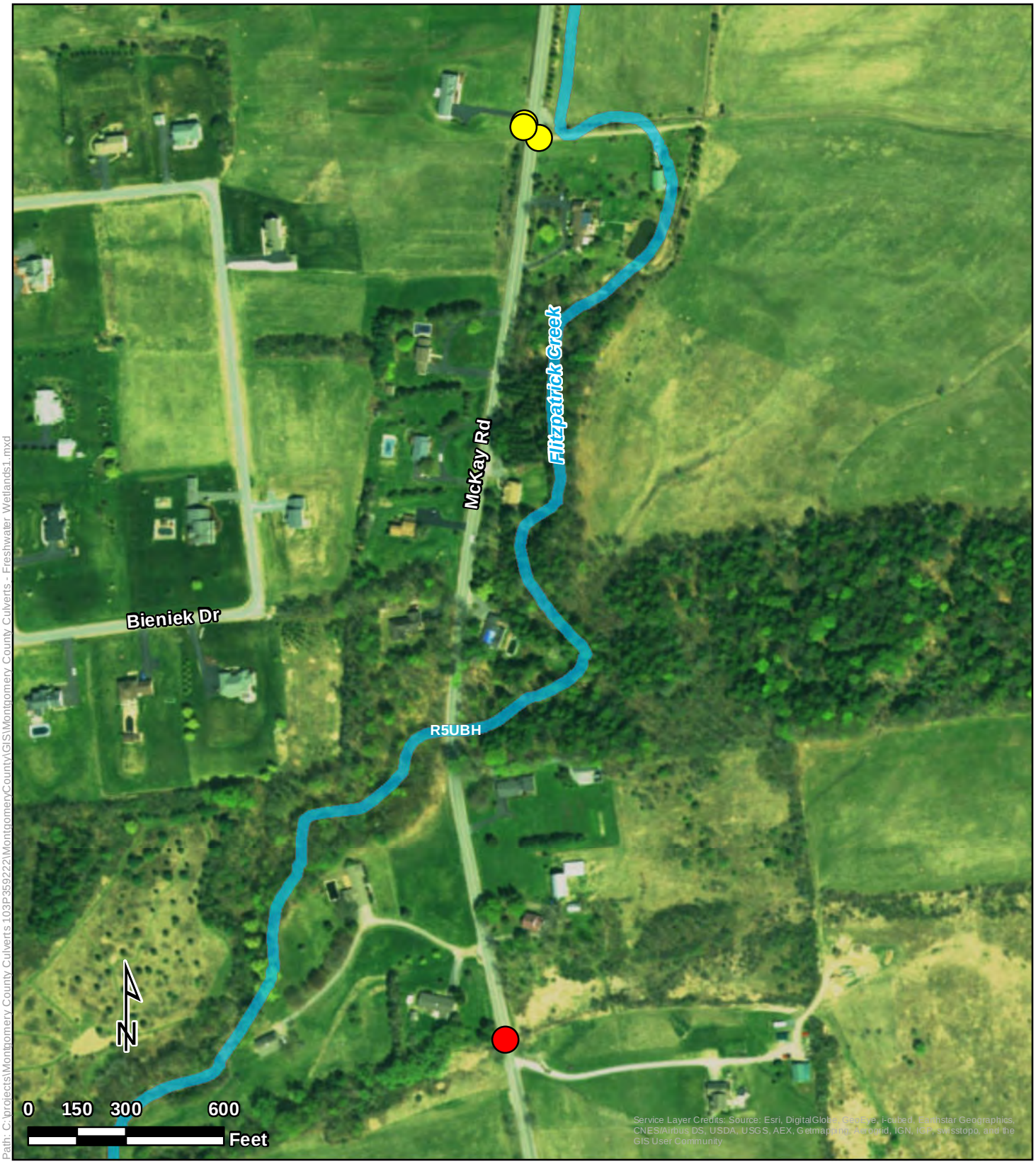

Path: C:\projects\Montgomery County Culverts 103P359222\MontgomeryCountyVGIS\Montgomery County Culverts - Freshwater Wetlands1.mxd

Legend

Culvert Locations

- McKay Road 1
- McKay Road 2
- NYS Freshwater Wetlands
- NYS Freshwater Wetlands Buffer

NWI Wetlands

- Riverine

Freshwater Wetlands

Montgomery County Culverts
McKay Road
Montgomery County, New York

Tetra Tech, Inc

Figure 7

John M. McDonald Engineering
a member of PRIME Group

April 10, 2017

Mr. Brad Sherwood
Project Manager
USACE Upstate Regulatory Field Office
1 Buffington St., Building 10, 3rd Fl. North
Watervilet, NY 12189-4000

Re: Montgomery County
Applications for Permit Nos. NAN-2017-00211-USH, NAN-2017-00213-USH, NAN-2017-00214-USH
Montgomery County Culvert Replacement Project
Project No. 134-1601

Dear Mr. Sherwood:

We have received your letters with comments regarding Permit Application Numbers NAN-2017-00211-USH, NAN-2017-00213-USH, and NAN-2017-00214-USH for the replacement of multiple culverts throughout Montgomery County. In response to these comments, we offer the following:

Dewatering

All site plans have been updated to include notes detailing how dewatering will be accomplished at each site to ensure all work will be completed in the dry. These notes outline a process that is designed to maintaining the quality of stream water. The plan is to capture clean water upstream of the work and pump around the site to a location downstream of the proposed work. The streambank and area at the pump discharge will be protected with stone, mats, or other protection to dissipate energy and prevent erosion and turbidity. The site plans have also been updated to show locations of temporary cofferdams, diversion pumps and piping, and measure to dissipate energy and control erosion. All site plans are attached.

Permit Application Number NAN-2017-00211-USH:

Coordination with SHPO will be completed by the Governor's Office of Storm Recovery. When coordination with SHPO has been completed we will forward the results.

Permit Application Number NAN-2017-00213-USH:
The purpose of the proposed 700 foot long 60-inch HPDE culvert and 570 foot ditch along Langley Road shown on the drawing entitled "Langley Road Overall Site Plan", is to redirect storm flows to an existing ditch and watercourse approximately 1,300 feet northeast of the existing culvert site. In its current configuration, stormwater passing through the existing culverts have no outlet, causing water to flood a low spot adjacent to an existing house and Langley Road. The proposed ditch and pipe will provide an outlet to direct water away from this low spot and alleviate the homeowner's and Langley Road's issues with flooding. There should be no impact to any waters of the United States resulting from this work.

We estimate that there are approximately five trees with a diameter at breast height greater than or equal to 3", that would need to be cleared to allow for the installation of the proposed 60-inch HDPE culvert pipe. These trees only affect the proposed 60-inch HDPE culvert pipe and not the proposed ditch. According to the NYS DEC's Environmental Resource Mapper, the location of the proposed work does not fall under a known location of "Rare Plants and Rare Animals". A printout from the Environmental Resource Mapper is attached. As a result, we believe that this would allow construction to proceed outside of the preferred time window of October to March. Therefore, we propose to complete all work at this site during the summer.

We will be contacting the New York Natural Heritage Program to confirm that we are allowed to clear trees outside of the preferred window of October to March. If the New York Natural Heritage Program advises that construction will not be allowed to proceed with any clearing outside the October to March window, we would implement an alternative schedule for construction. First, all construction that does not require clearing will be completed during the summer months. This would require installing as much of the proposed 60-inch HDPE pipe as possible and capping sections of the pipe until this pipe can be installed in its entirety. Then in October clearing would be completed to allow installation of the proposed 60-inch HDPE pipe.

Permit Application Number NAN-2017-00214-USH:

The purpose of the proposed 1,200 foot long 60-inch HPDE culvert along McKay Road shown on the drawing entitled "McKay Road Overall Site Plan", is to redirect storm flows to an existing ditch and watercourse approximately 1,200 feet south of the existing culvert site. In its current configuration, stormwater passing through the existing culverts has no outlet causing water to flood a field owned by a farmer. The proposed ditch and pipe willprovide an outlet to direct water away from this field and alleviate the farmer's issues with flooding. There should be no impact to any waters of the United States resulting from this work.

We estimate that there would be no more than fifty trees with a diameter at breast height of 3" or greater, along the final 400 feet of the proposed 60-inch HDPE culvert pipe that would need to be cleared to allow for the installation of this pipe. According to the NYS DEC's Environmental Resource Mapper, the location of the proposed work does not fall under a known location of "Rare Plants and Rare Animals". A printout from the Environmental Resource Mapper is attached. As a result, we believe that this would allow construction to proceed outside of the preferred time window of October to March. Therefore, we propose to complete all work at this site during the summer.

We will be contacting the New York Natural Heritage Program to confirm that we are allowed to clear trees outside of the preferred window of October to March. If the New York Natural Heritage Program advises that construction will not be allowed to proceed with any clearing outside the October to March window, we would implement an alternate schedule for construction. First, all construction up to the point that would require clearing will be completed during the summer months and the ends of the proposed 60-inch HDPE pipe will be capped until this pipe is installed in its entirety. During this time, bypass piping will be maintained to direct water from the ditch on the east side of the road to the ditch that runs in an easterly direction adjacent to the stone driveway. The existing 24" CMP culvert that crosses beneath the street will also be maintained. Then in October clearing would be completed to allow installation of the proposed 60-inch HDPE pipe.

After you have received this information, please let us know if you have any questions or need anything further.

Sincerely,

A. Thomas Bates, P.E.

cc. Eric Mead, Commissioner
Brad Sherwood, ACOE
Laurice Salamack, GOSR
Steven Kirk, GOSR

Environmental Resource Mapper

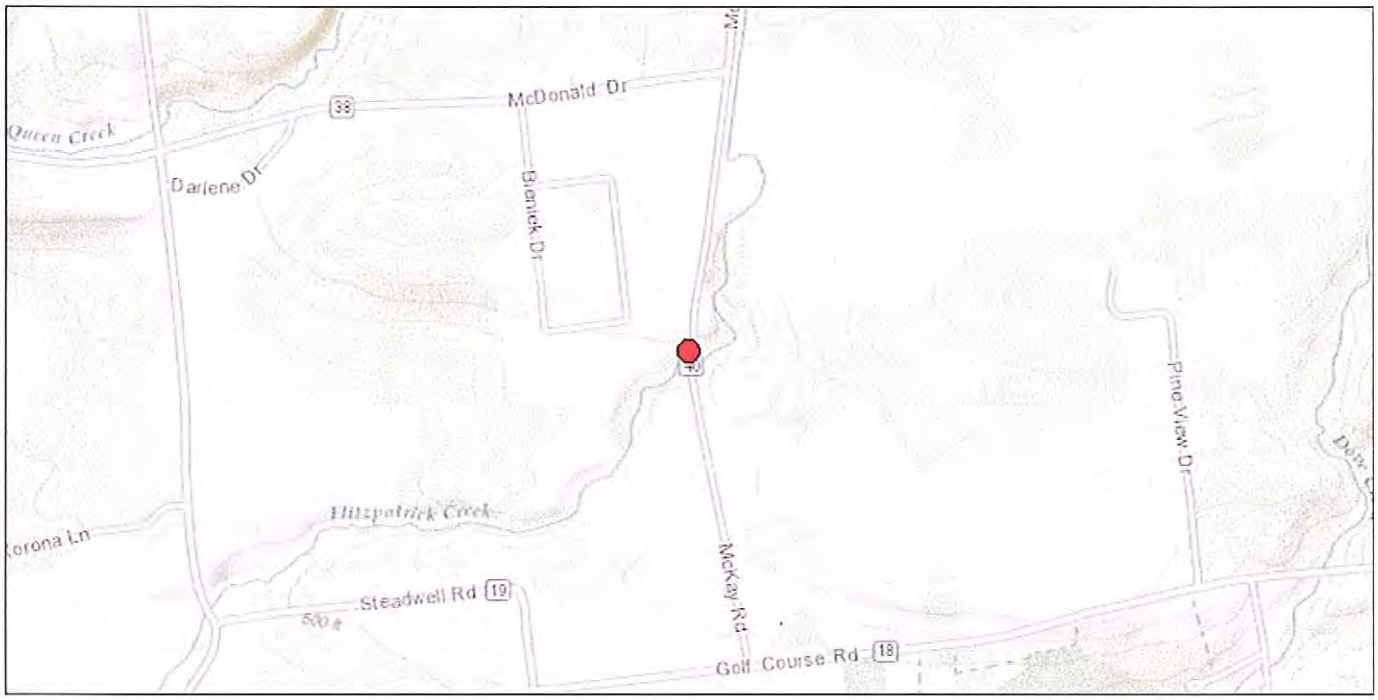

The coordinates of the point you clicked on are:

UTM 18	**Easting:**	564291.898	**Northing:**	4757872.747
Longitude/Latitude	**Longitude:**	-74.212	**Latitude:**	42.971

The approximate address of the point you clicked on is:
659 McKay Rd, Amsterdam, Town of, New York, 12010

County: Montgomery
USGS Quad: AMSTERDAM

DEC Region

Region 4:
(Capital Region/Northern Catskills) Albany, Columbia, Delaware, Greene, Montgomery, Otsego, Rensselaer, Schenectady and Schoharie counties. For more information visit http://www.dec.ny.gov/about/611.html.

Waterbody Classifications for Rivers/Streams

Regulation: 876-170
Standard: C
Classification: C

National Wetands Inventory

Attribute: R5UBH
Type: Riverine
Acres: 2383.7508190082744

For more information about the National Wetands Inventory wetlands visit http://www.fws.gov/wetlands/

If your project or action is within or near an area with a rare animal, a permit may be required if the species is listed as endangered or threatened and the department determines the action may be harmful to the species or its habitat.

If your project or action is within or near an area with rare plants and/or significant natural communities, the environmental impacts may need to be addressed.

The presence of a unique geological feature or landform near a project, unto itself, does not trigger a requirement for a NYS DEC permit. Readers are advised, however, that there is the chance that a unique feature may also show in another data layer (ie. a wetland) and thus be subject to permit jurisdiction.

Please refer to the "Need a Permit?" tab for permit information or other authorizations regarding these natural resources.

Disclaimer: If you are considering a project or action in, or near, a wetland or a stream, a NYS DEC permit may be required. The Environmental Resources Mapper does not show all natural resources which are regulated by NYS DEC, and for which permits from NYS DEC are required. For example, Regulated Tidal Wetlands, and Wild, Scenic, and Recreational Rivers, are currently not included on the maps.

Environmental Resource Mapper

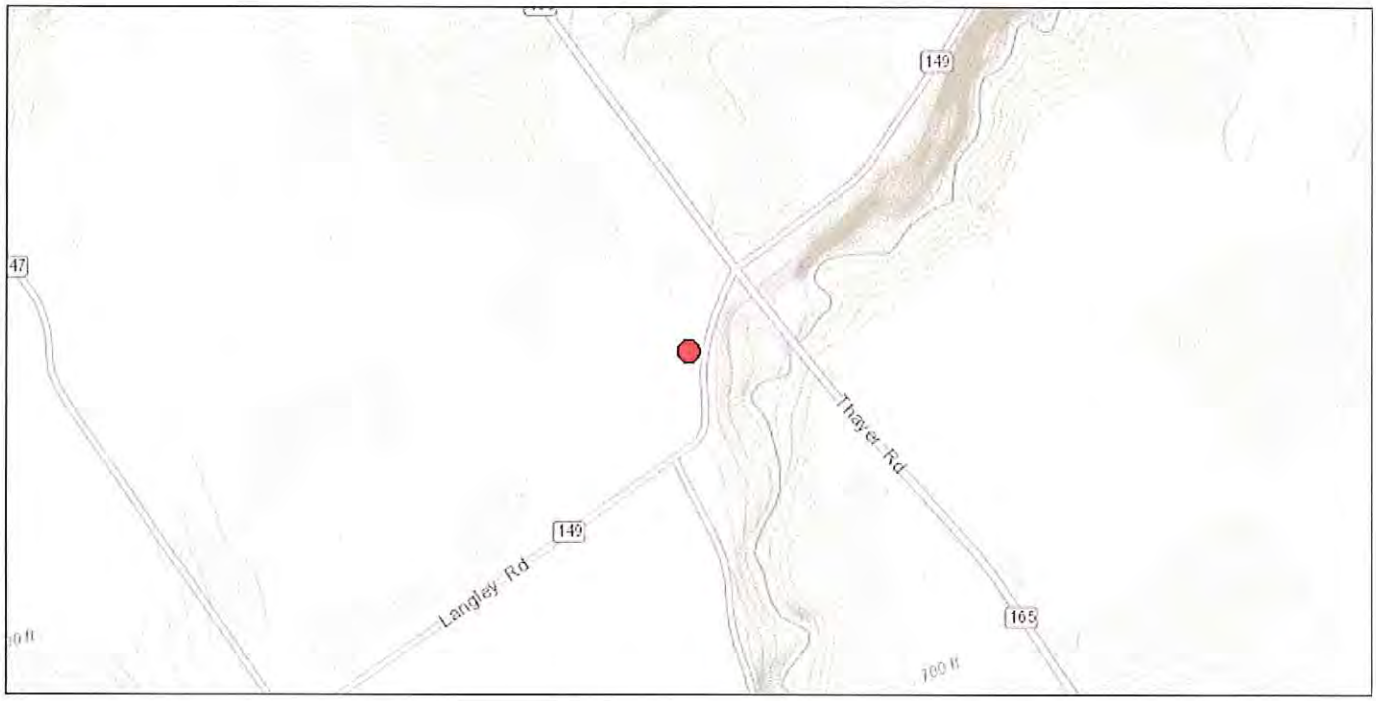

The coordinates of the point you clicked on are:

UTM 18	**Easting:**	567855.394	**Northing:**	4749666.542
Longitude/Latitude	**Longitude:**	-74.169	**Latitude:**	42.897

The approximate address of the point you clicked on is:
749 Langley Rd, Florida, Town of, New York, 12010

County: Montgomery
USGS Quad: AMSTERDAM

DEC Region

Region 4:
(Capital Region/Northern Catskills) Albany, Columbia, Delaware, Greene, Montgomery, Otsego, Rensselaer, Schenectady and Schoharie counties. For more information visit http://www.dec.ny.gov/about/611.html.

If your project or action is within or near an area with a rare animal, a permit may be required if the species is listed as endangered or threatened and the department determines the action may be harmful to the species or its habitat.

If your project or action is within or near an area with rare plants and/or significant natural communities, the environmental impacts may need to be addressed.

The presence of a unique geological feature or landform near a project, unto itself, does not trigger a requirement for a NYS DEC permit. Readers are advised, however, that there is the chance that a unique feature may also show in another data layer (ie. a wetland) and thus be subject to permit jurisdiction.

Please refer to the "Need a Permit?" tab for permit information or other authorizations regarding these natural resources.

Disclaimer: If you are considering a project or action in, or near, a wetland or a stream, a NYS DEC permit may be required. The Environmental Resources Mapper does not show all natural resources which are regulated by NYS DEC, and for which permits from NYS DEC are required. For example, Regulated Tidal Wetlands, and Wild, Scenic, and Recreational Rivers, are currently not included on the maps.

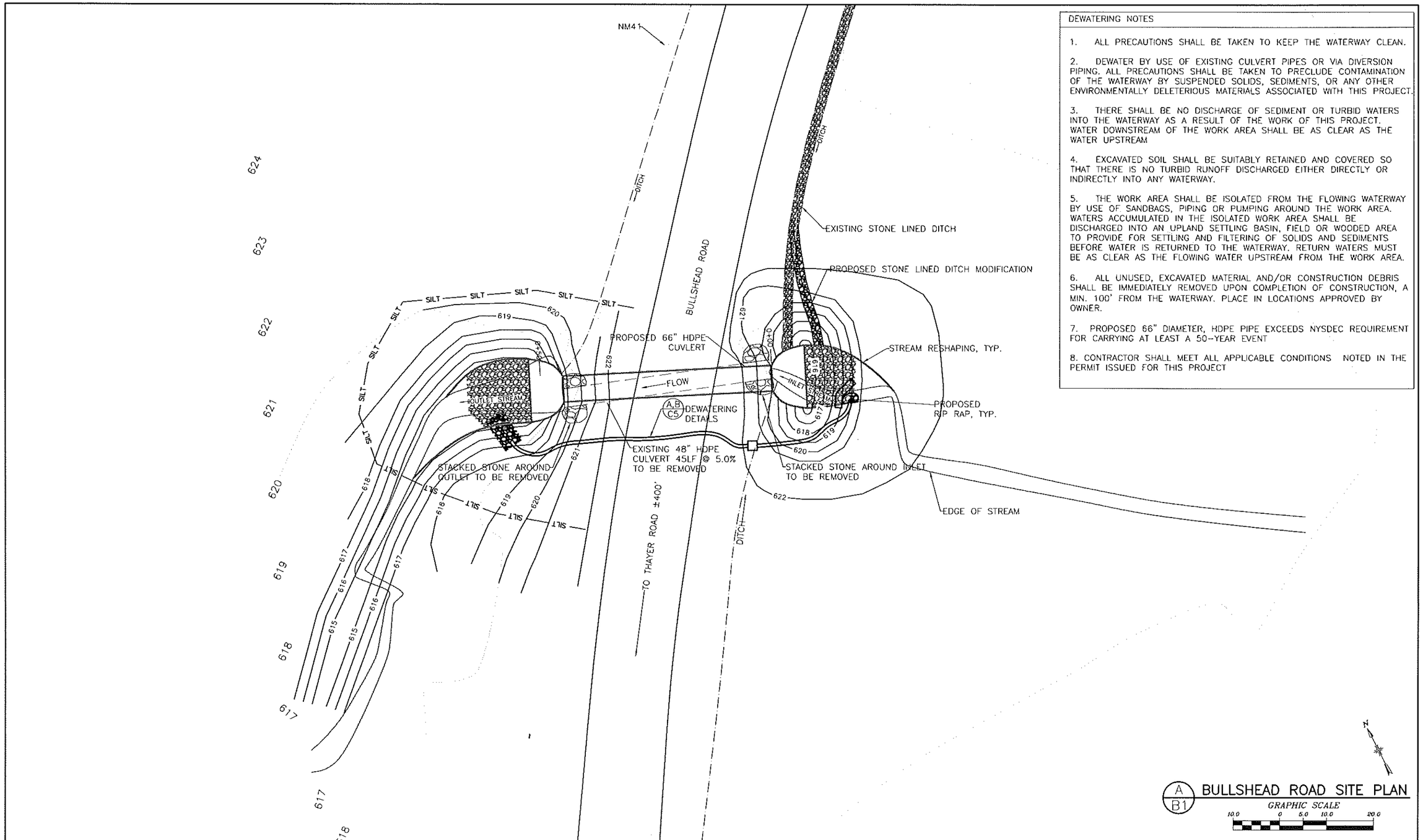

DEWATERING NOTES

1. ALL PRECAUTIONS SHALL BE TAKEN TO KEEP THE WATERWAY CLEAN.

2. DEWATER BY USE OF EXISTING CULVERT PIPES OR VIA DIVERSION PIPING. ALL PRECAUTIONS SHALL BE TAKEN TO PRECLUDE CONTAMINATION OF THE WATERWAY BY SUSPENDED SOLIDS, SEDIMENTS, OR ANY OTHER ENVIRONMENTALLY DELETERIOUS MATERIALS ASSOCIATED WITH THIS PROJECT.

3. THERE SHALL BE NO DISCHARGE OF SEDIMENT OR TURBID WATERS INTO THE WATERWAY AS A RESULT OF THE WORK OF THIS PROJECT. WATER DOWNSTREAM OF THE WORK AREA SHALL BE AS CLEAR AS THE WATER UPSTREAM

4. EXCAVATED SOIL SHALL BE SUITABLY RETAINED AND COVERED SO THAT THERE IS NO TURBID RUNOFF DISCHARGED EITHER DIRECTLY OR INDIRECTLY INTO ANY WATERWAY.

5. THE WORK AREA SHALL BE ISOLATED FROM THE FLOWING WATERWAY BY USE OF SANDBAGS, PIPING OR PUMPING AROUND THE WORK AREA. WATERS ACCUMULATED IN THE ISOLATED WORK AREA SHALL BE DISCHARGED INTO AN UPLAND SETTLING BASIN, FIELD OR WOODED AREA TO PROVIDE FOR SETTLING AND FILTERING OF SOLIDS AND SEDIMENTS BEFORE WATER IS RETURNED TO THE WATERWAY. RETURN WATERS MUST BE AS CLEAR AS THE FLOWING WATER UPSTREAM FROM THE WORK AREA.

6. ALL UNUSED, EXCAVATED MATERIAL AND/OR CONSTRUCTION DEBRIS SHALL BE IMMEDIATELY REMOVED UPON COMPLETION OF CONSTRUCTION, A MIN. 100' FROM THE WATERWAY. PLACE IN LOCATIONS APPROVED BY OWNER.

7. PROPOSED 66" DIAMETER, HDPE PIPE EXCEEDS NYSDEC REQUIREMENT FOR CARRYING AT LEAST A 50-YEAR EVENT

8. CONTRACTOR SHALL MEET ALL APPLICABLE CONDITIONS NOTED IN THE PERMIT ISSUED FOR THIS PROJECT

A/B1 BULLSHEAD ROAD SITE PLAN

GRAPHIC SCALE 10.0 0 5.0 10.0 20.0

NO.	DATE	REVISION	BY
00	10/2016	ORIGINAL ISSUE	ATB
01	12/28/16	GOSR REVIEW ISSUE	BSN
02	2/24/17	ENVIRONMENTAL REVIEW ISSUE	BSN

JME
John M. McDonald Engineering
a division of PARTNER Group
New York Office
7 South Church Street Schenectady, New York 12305
Ph: 518 382 1774 Fax: 518 382 1776
www.mcdonaldengineers.com www.primeeng.com

PROJ. ENGR.: ATB | DRAWN BY: BSN | CHECKED BY: JMM

UNAUTHORIZED ALTERATIONS TO THIS DOCUMENT IS A VIOLATION OF SECTION 7209 SUBDIVISION 2 OF NEW YORK STATE EDUCATION LAW

MONTGOMERY COUNTY

CULVERT REPLACEMENT

CONTRACT NO. 3 - TOWN OF AMSTERDAM CULVERT REPLACEMENT
CONTRACT NO. 4 - TOWN OF FLORIDA CULVERT REPLACEMENT

SHEET TITLE:

BULLSHEAD ROAD SITE PLAN

SCALE: AS SHOWN

FILE NO.: 134-1601-200

DATE: OCTOBER 2016

SHEET NO.: B1

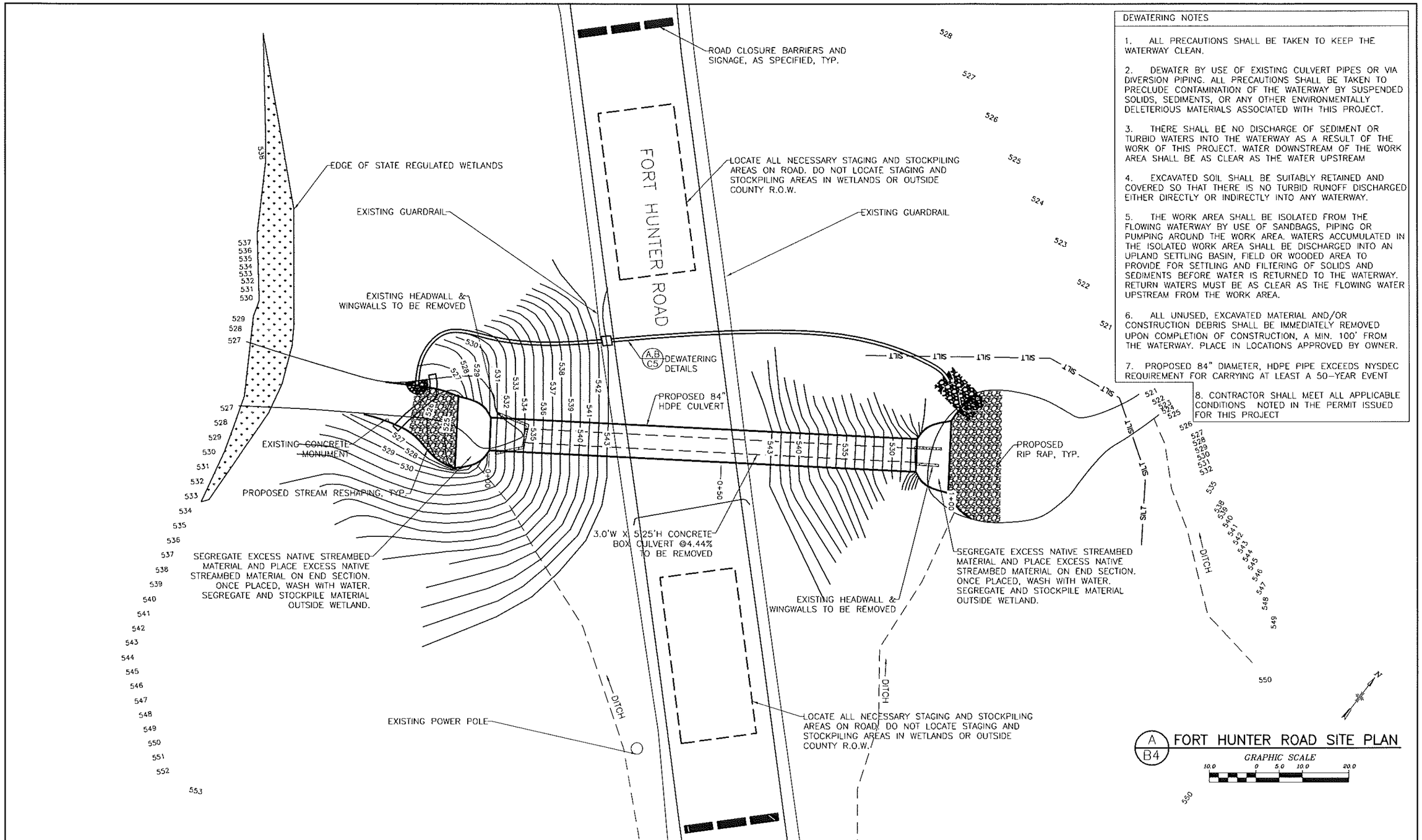

DEWATERING NOTES

1. ALL PRECAUTIONS SHALL BE TAKEN TO KEEP THE WATERWAY CLEAN.

2. DEWATER BY USE OF EXISTING CULVERT PIPES OR VIA DIVERSION PIPING. ALL PRECAUTIONS SHALL BE TAKEN TO PRECLUDE CONTAMINATION OF THE WATERWAY BY SUSPENDED SOLIDS, SEDIMENTS, OR ANY OTHER ENVIRONMENTALLY DELETERIOUS MATERIALS ASSOCIATED WITH THIS PROJECT.

3. THERE SHALL BE NO DISCHARGE OF SEDIMENT OR TURBID WATERS INTO THE WATERWAY AS A RESULT OF THE WORK OF THIS PROJECT. WATER DOWNSTREAM OF THE WORK AREA SHALL BE AS CLEAR AS THE WATER UPSTREAM

4. EXCAVATED SOIL SHALL BE SUITABLY RETAINED AND COVERED SO THAT THERE IS NO TURBID RUNOFF DISCHARGED EITHER DIRECTLY OR INDIRECTLY INTO ANY WATERWAY.

5. THE WORK AREA SHALL BE ISOLATED FROM THE FLOWING WATERWAY BY USE OF SANDBAGS, PIPING OR PUMPING AROUND THE WORK AREA. WATERS ACCUMULATED IN THE ISOLATED WORK AREA SHALL BE DISCHARGED INTO AN UPLAND SETTLING BASIN, FIELD OR WOODED AREA TO PROVIDE FOR SETTLING AND FILTERING OF SOLIDS AND SEDIMENTS BEFORE WATER IS RETURNED TO THE WATERWAY. RETURN WATERS MUST BE AS CLEAR AS THE FLOWING WATER UPSTREAM FROM THE WORK AREA.

6. ALL UNUSED, EXCAVATED MATERIAL AND/OR CONSTRUCTION DEBRIS SHALL BE IMMEDIATELY REMOVED UPON COMPLETION OF CONSTRUCTION, A MIN. 100' FROM THE WATERWAY. PLACE IN LOCATIONS APPROVED BY OWNER.

7. PROPOSED 84" DIAMETER, HDPE PIPE EXCEEDS NYSDEC REQUIREMENT FOR CARRYING AT LEAST A 50-YEAR EVENT

8. CONTRACTOR SHALL MEET ALL APPLICABLE CONDITIONS NOTED IN THE PERMIT ISSUED FOR THIS PROJECT

NO.	DATE	REVISION	BY
00	10/2016	ORIGINAL ISSUE	ATB
01	12/28/16	GOSR REVIEW ISSUE	BSN
02	2/24/17	ENVIRONMENTAL REVIEW ISSUE	BSN

JME
John M. McDonald Engineering
a member of PRIME Group
New York Office
7 South Church Street Schenectady, New York 12305
Ph: 518 382 1774 Fax: 518 382 1776
www.mcdonaldengineers.com www.primeeng.com

PROJ. ENGR.: ATB | DRAWN BY: BSN | CHECKED BY: JMM

UNAUTHORIZED ALTERATIONS TO THIS DOCUMENT IS A VIOLATION OF SECTION 7209 SUBDIVISION 2 OF NEW YORK STATE EDUCATION LAW

MONTGOMERY COUNTY

CULVERT REPLACEMENT

CONTRACT NO. 3 - TOWN OF AMSTERDAM CULVERT REPLACEMENT
CONTRACT NO. 4 - TOWN OF FLORIDA CULVERT REPLACEMENT

SHEET TITLE:

FORT HUNTER ROAD SITE PLAN

SCALE: AS SHOWN

FILE NO.: 134-1601-210

DATE: OCTOBER 2016

SHEET NO.: B4

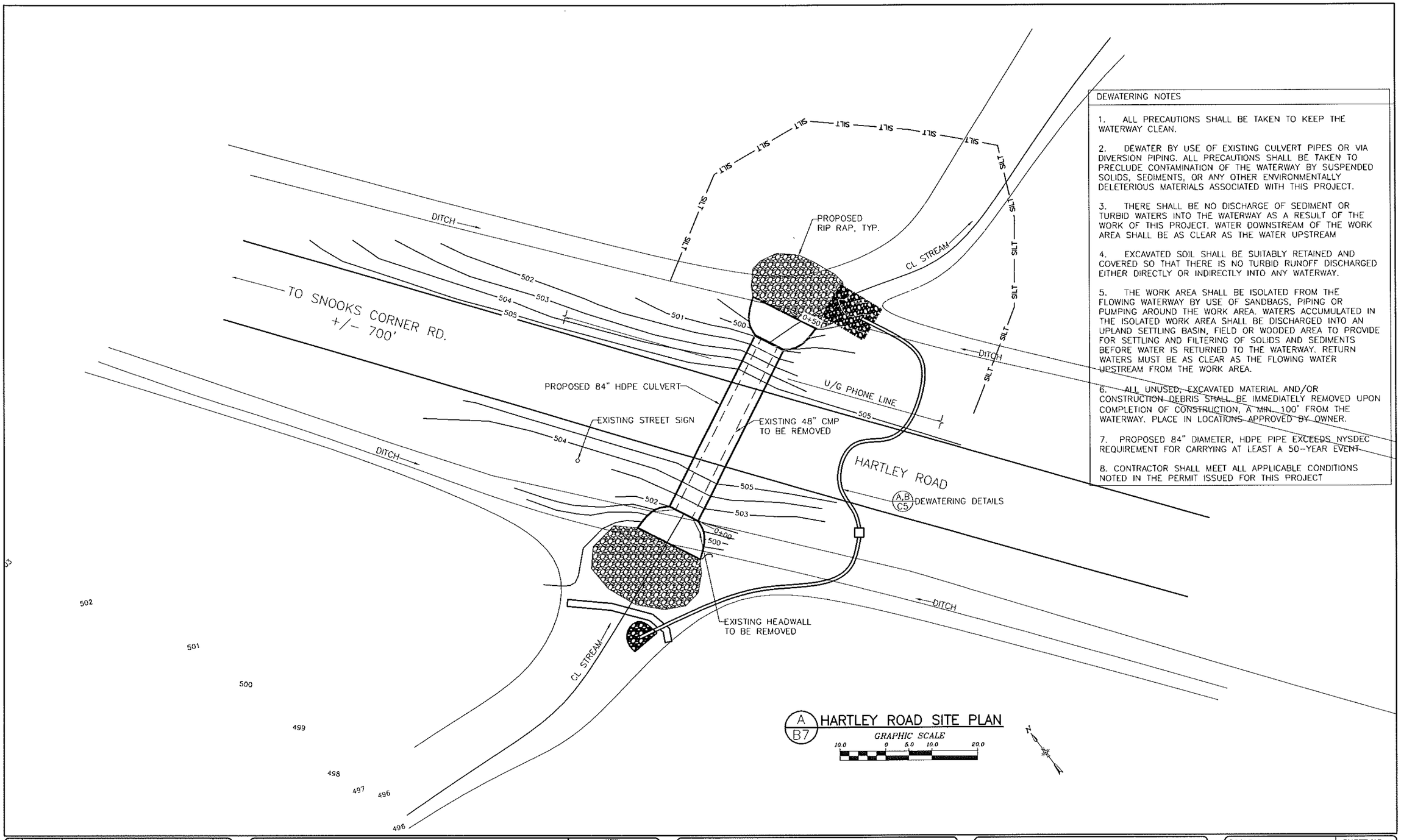

DEWATERING NOTES

1. ALL PRECAUTIONS SHALL BE TAKEN TO KEEP THE WATERWAY CLEAN.

2. DEWATER BY USE OF EXISTING CULVERT PIPES OR VIA DIVERSION PIPING. ALL PRECAUTIONS SHALL BE TAKEN TO PRECLUDE CONTAMINATION OF THE WATERWAY BY SUSPENDED SOLIDS, SEDIMENTS, OR ANY OTHER ENVIRONMENTALLY DELETERIOUS MATERIALS ASSOCIATED WITH THIS PROJECT.

3. THERE SHALL BE NO DISCHARGE OF SEDIMENT OR TURBID WATERS INTO THE WATERWAY AS A RESULT OF THE WORK OF THIS PROJECT. WATER DOWNSTREAM OF THE WORK AREA SHALL BE AS CLEAR AS THE WATER UPSTREAM

4. EXCAVATED SOIL SHALL BE SUITABLY RETAINED AND COVERED SO THAT THERE IS NO TURBID RUNOFF DISCHARGED EITHER DIRECTLY OR INDIRECTLY INTO ANY WATERWAY.

5. THE WORK AREA SHALL BE ISOLATED FROM THE FLOWING WATERWAY BY USE OF SANDBAGS, PIPING OR PUMPING AROUND THE WORK AREA. WATERS ACCUMULATED IN THE ISOLATED WORK AREA SHALL BE DISCHARGED INTO AN UPLAND SETTLING BASIN, FIELD OR WOODED AREA TO PROVIDE FOR SETTLING AND FILTERING OF SOLIDS AND SEDIMENTS BEFORE WATER IS RETURNED TO THE WATERWAY. RETURN WATERS MUST BE AS CLEAR AS THE FLOWING WATER UPSTREAM FROM THE WORK AREA.

6. ALL UNUSED, EXCAVATED MATERIAL AND/OR CONSTRUCTION DEBRIS SHALL BE IMMEDIATELY REMOVED UPON COMPLETION OF CONSTRUCTION, A MIN. 100' FROM THE WATERWAY. PLACE IN LOCATIONS APPROVED BY OWNER.

7. PROPOSED 84" DIAMETER, HDPE PIPE EXCEEDS NYSDEC REQUIREMENT FOR CARRYING AT LEAST A 50-YEAR EVENT

8. CONTRACTOR SHALL MEET ALL APPLICABLE CONDITIONS NOTED IN THE PERMIT ISSUED FOR THIS PROJECT

NO.	DATE	REVISION	BY
00	10/2016	ORIGINAL ISSUE	ATB
01	12/28/16	GOSR REVIEW ISSUE	BSN
02	2/24/17	ENVIRONMENTAL REVIEW ISSUE	BSN

JME
John M. McDonald Engineering, P.C.
a member of PRITEK Group
New York Office
7 South Church Street Schenectady, New York 12305
Ph: 518 382 1774 Fax: 518 382 1776
www.mcdonaldengineers.com www.primeeng.com

PROJ. ENGR.: ATB | DRAWN BY: BSN | CHECKED BY: JMM

LICENSED PROFESSIONAL ENGINEER JOHN M. McDONALD NO. 54556 STATE OF NEW YORK

UNAUTHORIZED ALTERATIONS TO THIS DOCUMENT IS A VIOLATION OF SECTION 7209 SUBDIVISION 2 OF NEW YORK STATE EDUCATION LAW.

MONTGOMERY COUNTY

CULVERT REPLACEMENT

CONTRACT NO. 3 - TOWN OF AMSTERDAM CULVERT REPLACEMENT
CONTRACT NO. 4 - TOWN OF FLORIDA CULVERT REPLACEMENT

SHEET TITLE:

HARTLEY ROAD SITE PLAN

SCALE: AS SHOWN

FILE NO.: 134-1601-220

DATE: OCTOBER 2016

SHEET NO.: B7

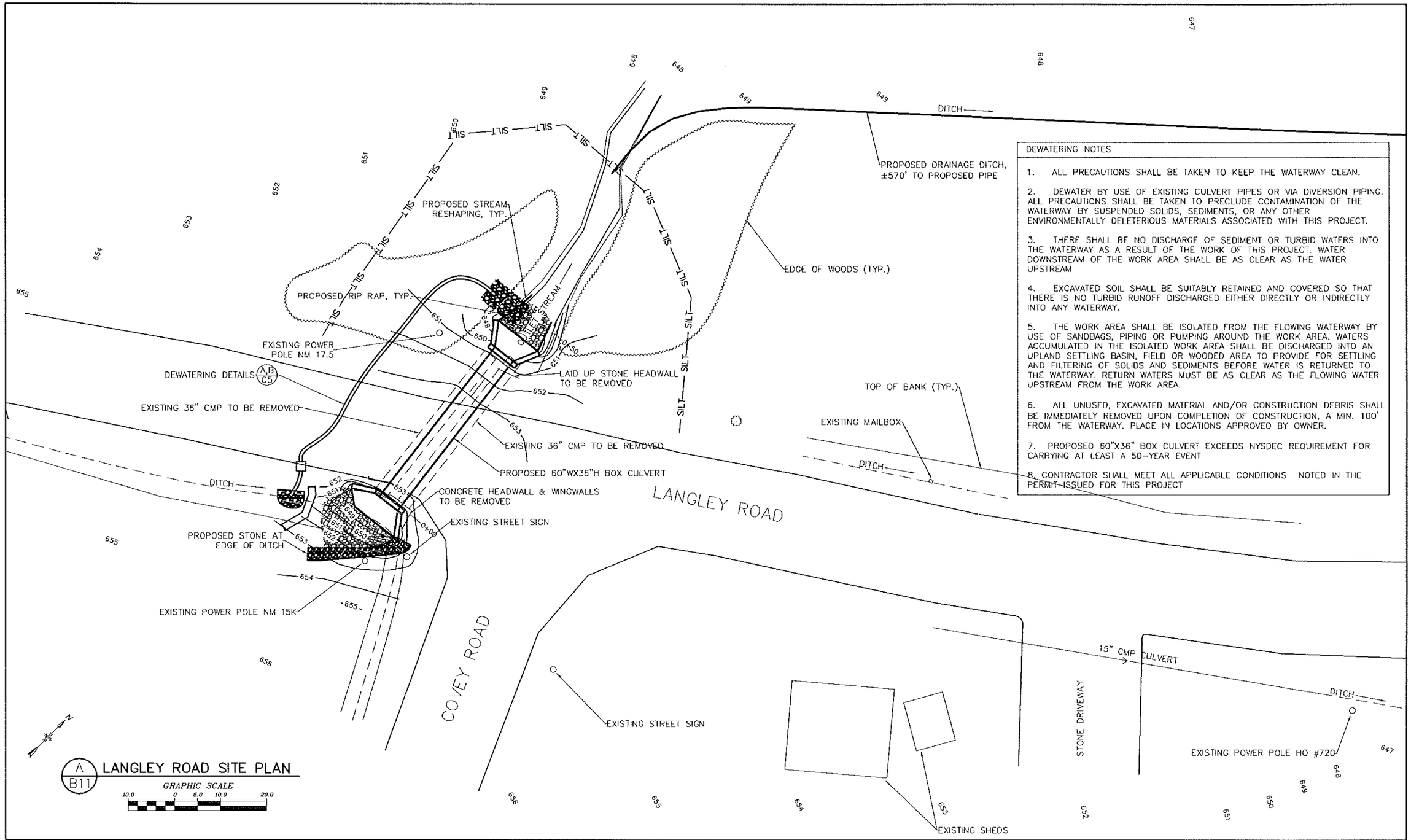

A B11 LANGLEY ROAD SITE PLAN

GRAPHIC SCALE 10.0 0 5.0 10.0 20.0

DEWATERING NOTES

1. ALL PRECAUTIONS SHALL BE TAKEN TO KEEP THE WATERWAY CLEAN.

2. DEWATER BY USE OF EXISTING CULVERT PIPES OR VIA DIVERSION PIPING. ALL PRECAUTIONS SHALL BE TAKEN TO PRECLUDE CONTAMINATION OF THE WATERWAY BY SUSPENDED SOLIDS, SEDIMENTS, OR ANY OTHER ENVIRONMENTALLY DELETERIOUS MATERIALS ASSOCIATED WITH THIS PROJECT.

3. THERE SHALL BE NO DISCHARGE OF SEDIMENT OR TURBID WATERS INTO THE WATERWAY AS A RESULT OF THE WORK OF THIS PROJECT. WATER DOWNSTREAM OF THE WORK AREA SHALL BE AS CLEAR AS THE WATER UPSTREAM

4. EXCAVATED SOIL SHALL BE SUITABLY RETAINED AND COVERED SO THAT THERE IS NO TURBID RUNOFF DISCHARGED EITHER DIRECTLY OR INDIRECTLY INTO ANY WATERWAY.

5. THE WORK AREA SHALL BE ISOLATED FROM THE FLOWING WATERWAY BY USE OF SANDBAGS, PIPING OR PUMPING AROUND THE WORK AREA. WATERS ACCUMULATED IN THE ISOLATED WORK AREA SHALL BE DISCHARGED INTO AN UPLAND SETTLING BASIN, FIELD OR WOODED AREA TO PROVIDE FOR SETTLING AND FILTERING OF SOLIDS AND SEDIMENTS BEFORE WATER IS RETURNED TO THE WATERWAY. RETURN WATERS MUST BE AS CLEAR AS THE FLOWING WATER UPSTREAM FROM THE WORK AREA.

6. ALL UNUSED, EXCAVATED MATERIAL AND/OR CONSTRUCTION DEBRIS SHALL BE IMMEDIATELY REMOVED UPON COMPLETION OF CONSTRUCTION, A MIN. 100' FROM THE WATERWAY. PLACE IN LOCATIONS APPROVED BY OWNER.

7. PROPOSED 60"X36" BOX CULVERT EXCEEDS NYSDEC REQUIREMENT FOR CARRYING AT LEAST A 50-YEAR EVENT

8. CONTRACTOR SHALL MEET ALL APPLICABLE CONDITIONS NOTED IN THE PERMIT ISSUED FOR THIS PROJECT

NO.	DATE	REVISION	BY
00	10/2016	ORIGINAL ISSUE	ATB
01	12/28/16	GOSR REVIEW ISSUE	BSN
02	2/24/17	ENVIRONMENTAL REVIEW ISSUE	BSN

JME
John M. McDonald Engineering, P.C.
New York Office
7 South Church Street Schenectady, New York 12305
Ph: 518 382 1774 Fax: 518 382 1776
www.mcdonaldengineers.com www.primeeng.com

PROJ. ENGR.: ATB | DRAWN BY: BSN | CHECKED BY: JMM

UNAUTHORIZED ALTERATIONS TO THIS DOCUMENT IS A VIOLATION OF SECTION 7209 SUBDIVISION 2 OF NEW YORK STATE EDUCATION LAW

MONTGOMERY COUNTY

CULVERT REPLACEMENT

CONTRACT NO. 3 - TOWN OF AMSTERDAM CULVERT REPLACEMENT
CONTRACT NO. 4 - TOWN OF FLORIDA CULVERT REPLACEMENT

SHEET TITLE: LANGLEY ROAD SITE PLAN

SCALE: AS SHOWN
FILE NO.: 134-1601-233
DATE: OCTOBER 2016
SHEET NO.: B11

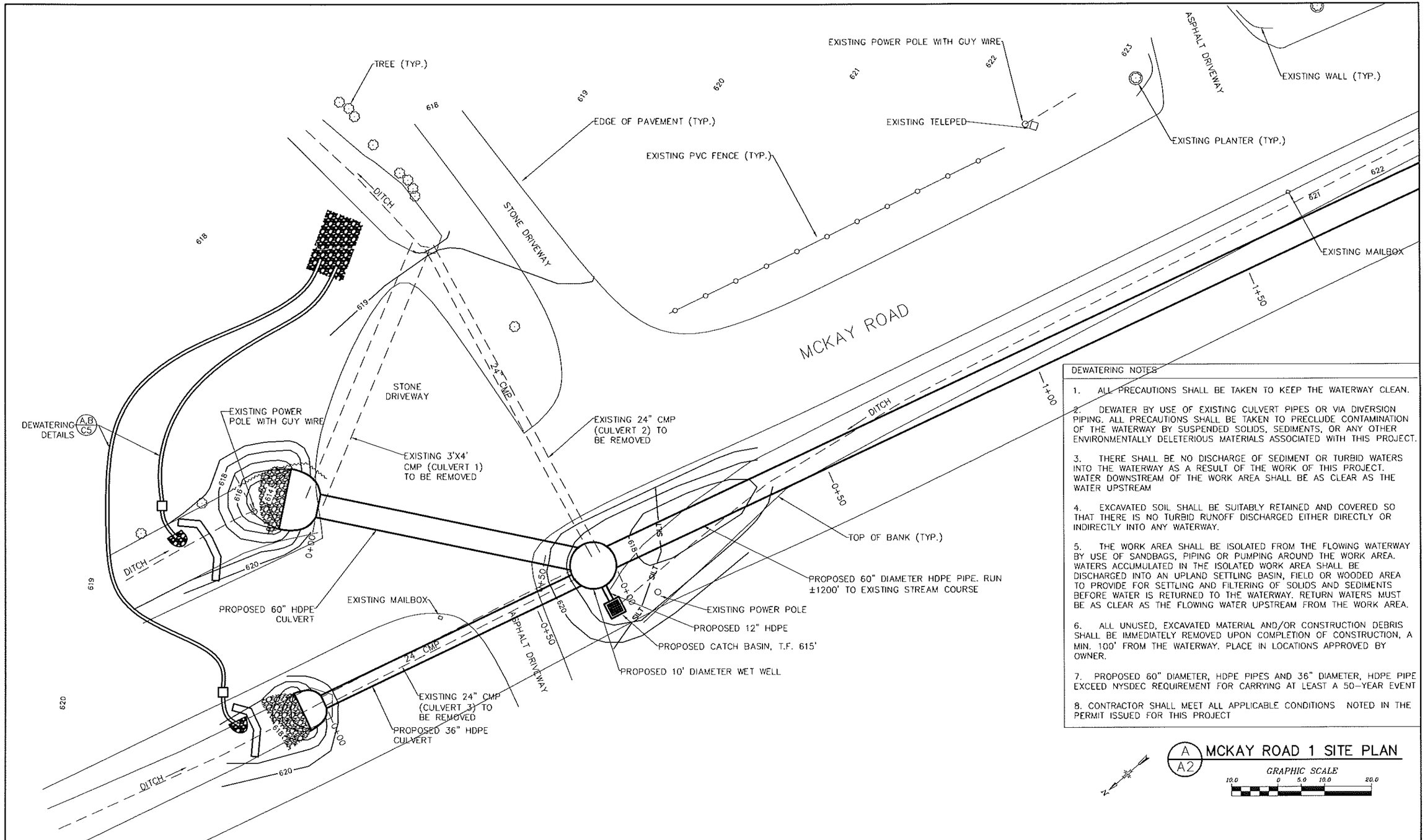

DEWATERING NOTES

1. ALL PRECAUTIONS SHALL BE TAKEN TO KEEP THE WATERWAY CLEAN.

2. DEWATER BY USE OF EXISTING CULVERT PIPES OR VIA DIVERSION PIPING. ALL PRECAUTIONS SHALL BE TAKEN TO PRECLUDE CONTAMINATION OF THE WATERWAY BY SUSPENDED SOLIDS, SEDIMENTS, OR ANY OTHER ENVIRONMENTALLY DELETERIOUS MATERIALS ASSOCIATED WITH THIS PROJECT.

3. THERE SHALL BE NO DISCHARGE OF SEDIMENT OR TURBID WATERS INTO THE WATERWAY AS A RESULT OF THE WORK OF THIS PROJECT. WATER DOWNSTREAM OF THE WORK AREA SHALL BE AS CLEAR AS THE WATER UPSTREAM

4. EXCAVATED SOIL SHALL BE SUITABLY RETAINED AND COVERED SO THAT THERE IS NO TURBID RUNOFF DISCHARGED EITHER DIRECTLY OR INDIRECTLY INTO ANY WATERWAY.

5. THE WORK AREA SHALL BE ISOLATED FROM THE FLOWING WATERWAY BY USE OF SANDBAGS, PIPING OR PUMPING AROUND THE WORK AREA. WATERS ACCUMULATED IN THE ISOLATED WORK AREA SHALL BE DISCHARGED INTO AN UPLAND SETTLING BASIN, FIELD OR WOODED AREA TO PROVIDE FOR SETTLING AND FILTERING OF SOLIDS AND SEDIMENTS BEFORE WATER IS RETURNED TO THE WATERWAY. RETURN WATERS MUST BE AS CLEAR AS THE FLOWING WATER UPSTREAM FROM THE WORK AREA.

6. ALL UNUSED, EXCAVATED MATERIAL AND/OR CONSTRUCTION DEBRIS SHALL BE IMMEDIATELY REMOVED UPON COMPLETION OF CONSTRUCTION, A MIN. 100' FROM THE WATERWAY. PLACE IN LOCATIONS APPROVED BY OWNER.

7. PROPOSED 60" DIAMETER, HDPE PIPES AND 36" DIAMETER, HDPE PIPE EXCEED NYSDEC REQUIREMENT FOR CARRYING AT LEAST A 50-YEAR EVENT

8. CONTRACTOR SHALL MEET ALL APPLICABLE CONDITIONS NOTED IN THE PERMIT ISSUED FOR THIS PROJECT

A / A2 MCKAY ROAD 1 SITE PLAN

GRAPHIC SCALE 10.0 0 5.0 10.0 20.0

NO.	DATE	REVISION	BY
00	10/2016	ORIGINAL ISSUE	DPC
01	12/28/16	GOSR REVIEW ISSUE	BSN
02	2/24/17	ENVIRONMENTAL REVIEW ISSUE	BSN

JME
John M. McDonald Engineering, P.C.
a member of PATTERSON GROUP
New York Office
7 South Church Street Schenectady, New York 12305
Ph: 518 382 1774 Fax: 518 382 1776
www.mcdonaldengineers.com www.primeeng.com

PROJ. ENGR.: DPC | DRAWN BY: BSN | CHECKED BY: JMM

UNAUTHORIZED ALTERATIONS TO THIS DOCUMENT IS A VIOLATION OF SECTION 7209 SUBDIVISION 2 OF NEW YORK STATE EDUCATION LAW

MONTGOMERY COUNTY

CULVERT REPLACEMENT

CONTRACT NO. 3 - TOWN OF AMSTERDAM CULVERT REPLACEMENT
CONTRACT NO. 4 - TOWN OF FLORIDA CULVERT REPLACEMENT

SHEET TITLE:

MCKAY ROAD 1
SITE PLAN

SCALE: AS SHOWN

FILE NO.: 134-1601-110

DATE: OCTOBER 2016

SHEET NO.: A2

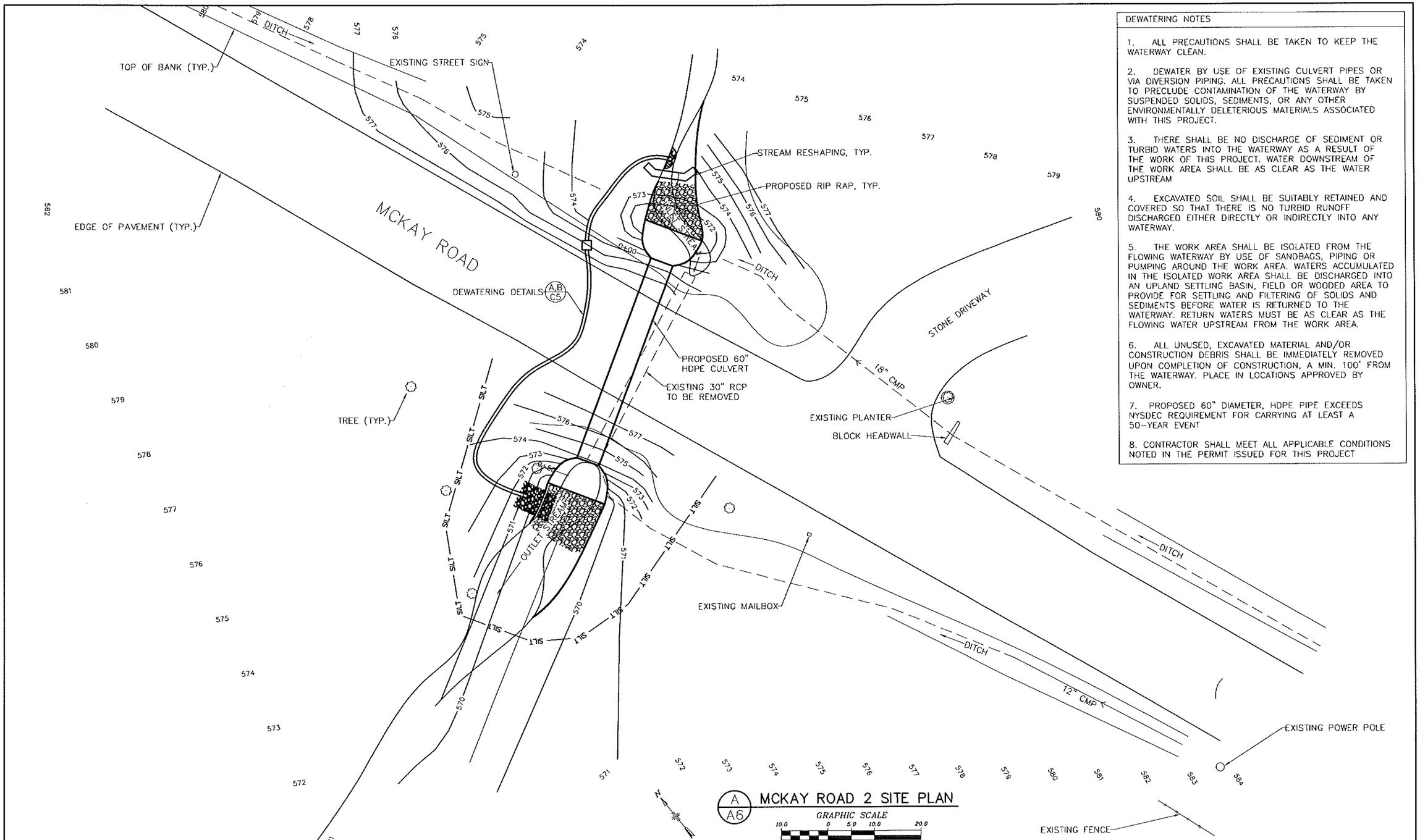

DEWATERING NOTES

1. ALL PRECAUTIONS SHALL BE TAKEN TO KEEP THE WATERWAY CLEAN.

2. DEWATER BY USE OF EXISTING CULVERT PIPES OR VIA DIVERSION PIPING. ALL PRECAUTIONS SHALL BE TAKEN TO PRECLUDE CONTAMINATION OF THE WATERWAY BY SUSPENDED SOLIDS, SEDIMENTS, OR ANY OTHER ENVIRONMENTALLY DELETERIOUS MATERIALS ASSOCIATED WITH THIS PROJECT.

3. THERE SHALL BE NO DISCHARGE OF SEDIMENT OR TURBID WATERS INTO THE WATERWAY AS A RESULT OF THE WORK OF THIS PROJECT. WATER DOWNSTREAM OF THE WORK AREA SHALL BE AS CLEAR AS THE WATER UPSTREAM

4. EXCAVATED SOIL SHALL BE SUITABLY RETAINED AND COVERED SO THAT THERE IS NO TURBID RUNOFF DISCHARGED EITHER DIRECTLY OR INDIRECTLY INTO ANY WATERWAY.

5. THE WORK AREA SHALL BE ISOLATED FROM THE FLOWING WATERWAY BY USE OF SANDBAGS, PIPING OR PUMPING AROUND THE WORK AREA. WATERS ACCUMULATED IN THE ISOLATED WORK AREA SHALL BE DISCHARGED INTO AN UPLAND SETTLING BASIN, FIELD OR WOODED AREA TO PROVIDE FOR SETTLING AND FILTERING OF SOLIDS AND SEDIMENTS BEFORE WATER IS RETURNED TO THE WATERWAY. RETURN WATERS MUST BE AS CLEAR AS THE FLOWING WATER UPSTREAM FROM THE WORK AREA.

6. ALL UNUSED, EXCAVATED MATERIAL AND/OR CONSTRUCTION DEBRIS SHALL BE IMMEDIATELY REMOVED UPON COMPLETION OF CONSTRUCTION, A MIN. 100' FROM THE WATERWAY. PLACE IN LOCATIONS APPROVED BY OWNER.

7. PROPOSED 60" DIAMETER, HDPE PIPE EXCEEDS NYSDEC REQUIREMENT FOR CARRYING AT LEAST A 50-YEAR EVENT

8. CONTRACTOR SHALL MEET ALL APPLICABLE CONDITIONS NOTED IN THE PERMIT ISSUED FOR THIS PROJECT

NO.	DATE	REVISION	BY
00	10/2016	ORIGINAL ISSUE	ATB
01	12/28/16	GOSR REVIEW ISSUE	BSN
02	2/24/17	ENVIRONMENTAL REVIEW ISSUE	BSN

JME
John M. McDonald Engineering, P.C.
a division of FIRTEC Group
New York Office
7 South Church Street Schenectady, New York 12305
Ph: 518 382 1774 Fax: 518 382 1776
www.mcdonaldengineers.com www.primeeng.com

PROJ. ENGR.: ATB | DRAWN BY: BSN | CHECKED BY: JMM

LICENSED PROFESSIONAL ENGINEER JOHN M. MCDONALD NO. 54508 STATE OF NEW YORK

UNAUTHORIZED ALTERATIONS TO THIS DOCUMENT IS A VIOLATION OF SECTION 7209 SUBDIVISION 2 OF NEW YORK STATE EDUCATION LAW

MONTGOMERY COUNTY

CULVERT REPLACEMENT

CONTRACT NO. 3 - TOWN OF AMSTERDAM CULVERT REPLACEMENT
CONTRACT NO. 4 - TOWN OF FLORIDA CULVERT REPLACEMENT

SHEET TITLE:

MCKAY ROAD 2
SITE PLAN

SCALE: AS SHOWN

FILE NO.: 134-1601-150

DATE: OCTOBER 2016

SHEET NO.: A6

DEWATERING NOTES

1. ALL PRECAUTIONS SHALL BE TAKEN TO KEEP THE WATERWAY CLEAN.

2. DEWATER BY USE OF EXISTING CULVERT PIPES OR VIA DIVERSION PIPING. ALL PRECAUTIONS SHALL BE TAKEN TO PRECLUDE CONTAMINATION OF THE WATERWAY BY SUSPENDED SOLIDS, SEDIMENTS, OR ANY OTHER ENVIRONMENTALLY DELETERIOUS MATERIALS ASSOCIATED WITH THIS PROJECT.

3. THERE SHALL BE NO DISCHARGE OF SEDIMENT OR TURBID WATERS INTO THE WATERWAY AS A RESULT OF THE WORK OF THIS PROJECT. WATER DOWNSTREAM OF THE WORK AREA SHALL BE AS CLEAR AS THE WATER UPSTREAM

4. EXCAVATED SOIL SHALL BE SUITABLY RETAINED AND COVERED SO THAT THERE IS NO TURBID RUNOFF DISCHARGED EITHER DIRECTLY OR INDIRECTLY INTO ANY WATERWAY.

5. THE WORK AREA SHALL BE ISOLATED FROM THE FLOWING WATERWAY BY USE OF SANDBAGS, PIPING OR PUMPING AROUND THE WORK AREA. WATERS ACCUMULATED IN THE ISOLATED WORK AREA SHALL BE DISCHARGED INTO AN UPLAND SETTLING BASIN, FIELD OR WOODED AREA TO PROVIDE FOR SETTLING AND FILTERING OF SOLIDS AND SEDIMENTS BEFORE WATER IS RETURNED TO THE WATERWAY. RETURN WATERS MUST BE AS CLEAR AS THE FLOWING WATER UPSTREAM FROM THE WORK AREA.

6. ALL UNUSED, EXCAVATED MATERIAL AND/OR CONSTRUCTION DEBRIS SHALL BE IMMEDIATELY REMOVED UPON COMPLETION OF CONSTRUCTION, A MIN. 100' FROM THE WATERWAY. PLACE IN LOCATIONS APPROVED BY OWNER.

7. PROPOSED 84" DIAMETER, HDPE PIPE EXCEEDS NYSDEC REQUIREMENT FOR CARRYING AT LEAST A 50-YEAR EVENT

8. CONTRACTOR SHALL MEET ALL APPLICABLE CONDITIONS NOTED IN THE PERMIT ISSUED FOR THIS PROJECT

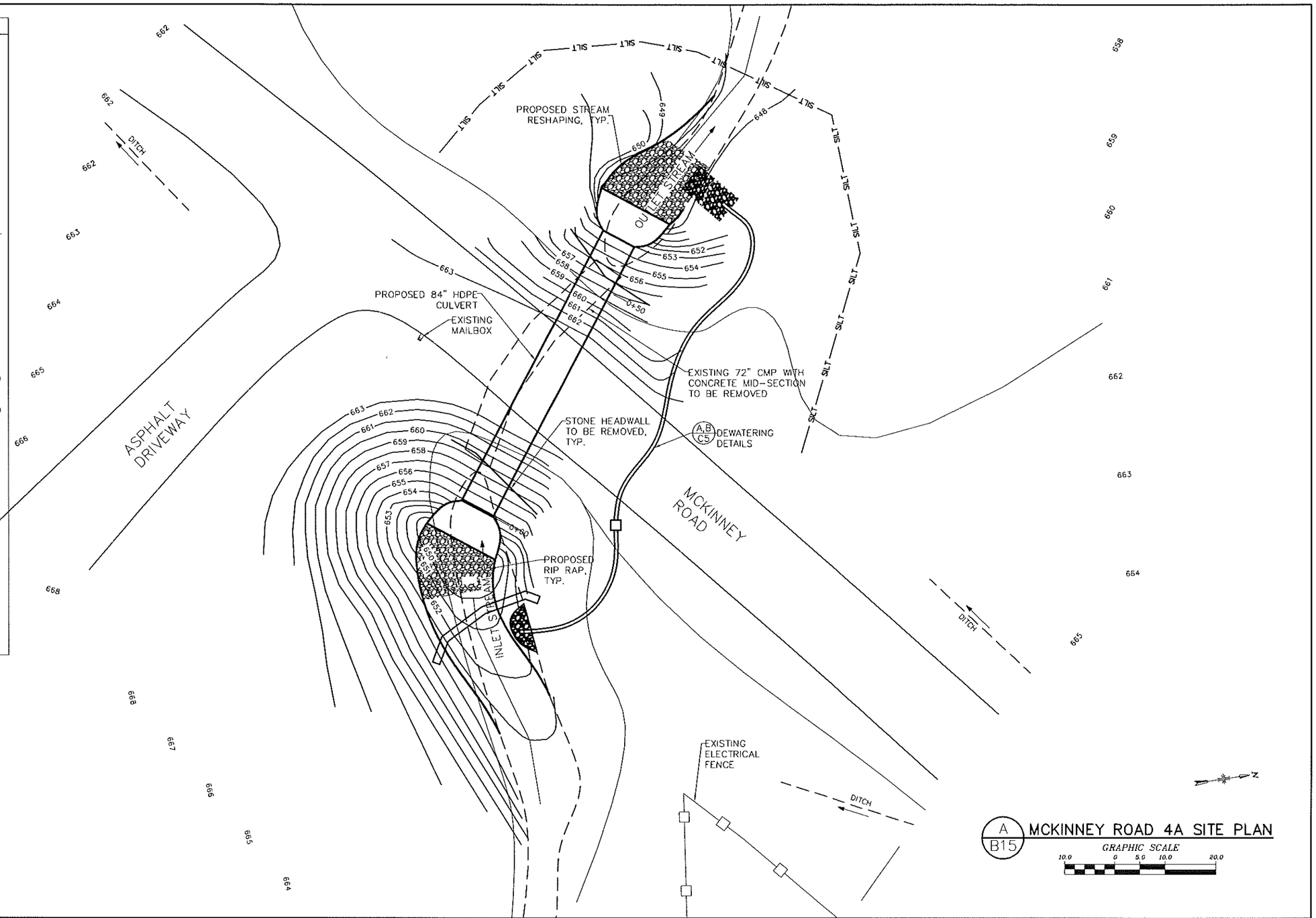

A B15 MCKINNEY ROAD 4A SITE PLAN

GRAPHIC SCALE 10.0 0 5.0 10.0 20.0

NO.	DATE	REVISION	BY
00	10/2016	ORIGINAL ISSUE	ATB
01	12/28/16	GOSR REVIEW ISSUE	BSN
02	2/24/17	ENVIRONMENTAL REVIEW ISSUE	BSN

JME
New York Office
7 South Church Street Schenectady, New York 12305
Ph: 518 382 1774 Fax: 518 382 1776
www.mcdonaldengineers.com www.primeeng.com

PROJ. ENGR.: ATB | DRAWN BY: BSN | CHECKED BY: JMM

JOHN M. MCDONALD LICENSED PROFESSIONAL ENGINEER NO. 54556 STATE OF NEW YORK

UNAUTHORIZED ALTERATIONS TO THIS DOCUMENT IS A VIOLATION OF SECTION 7209 SUBDIVISION 2 OF NEW YORK STATE EDUCATION LAW

MONTGOMERY COUNTY

CULVERT REPLACEMENT

CONTRACT NO. 3 - TOWN OF AMSTERDAM CULVERT REPLACEMENT
CONTRACT NO. 4 - TOWN OF FLORIDA CULVERT REPLACEMENT

SHEET TITLE:

MCKINNEY ROAD 4A SITE PLAN

SCALE: AS SHOWN

FILE NO.: 134-1601-240

DATE: OCTOBER 2016

SHEET NO.: B15

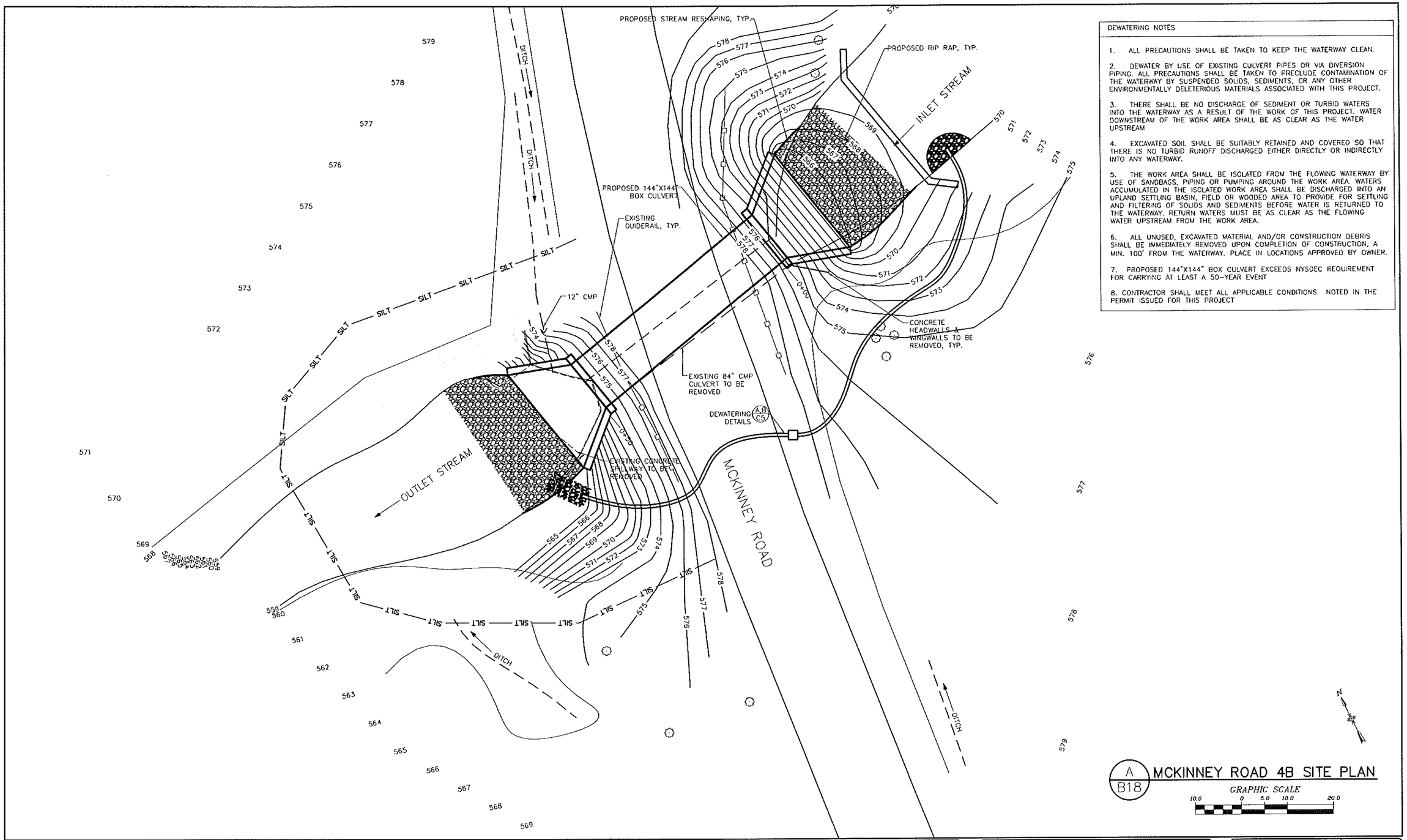

DEWATERING NOTES

1. ALL PRECAUTIONS SHALL BE TAKEN TO KEEP THE WATERWAY CLEAN.

2. DEWATER BY USE OF EXISTING CULVERT PIPES OR VIA DIVERSION PIPING. ALL PRECAUTIONS SHALL BE TAKEN TO PRECLUDE CONTAMINATION OF THE WATERWAY BY SUSPENDED SOLIDS, SEDIMENTS, OR ANY OTHER ENVIRONMENTALLY DELETERIOUS MATERIALS ASSOCIATED WITH THIS PROJECT.

3. THERE SHALL BE NO DISCHARGE OF SEDIMENT OR TURBID WATERS INTO THE WATERWAY AS A RESULT OF THE WORK OF THIS PROJECT. WATER DOWNSTREAM OF THE WORK AREA SHALL BE AS CLEAR AS THE WATER UPSTREAM

4. EXCAVATED SOIL SHALL BE SUITABLY RETAINED AND COVERED SO THAT THERE IS NO TURBID RUNOFF DISCHARGED EITHER DIRECTLY OR INDIRECTLY INTO ANY WATERWAY.

5. THE WORK AREA SHALL BE ISOLATED FROM THE FLOWING WATERWAY BY USE OF SANDBAGS, PIPING OR PUMPING AROUND THE WORK AREA. WATERS ACCUMULATED IN THE ISOLATED WORK AREA SHALL BE DISCHARGED INTO AN UPLAND SETTLING BASIN, FIELD OR WOODED AREA TO PROVIDE FOR SETTLING AND FILTERING OF SOLIDS AND SEDIMENTS BEFORE WATER IS RETURNED TO THE WATERWAY. RETURN WATERS MUST BE AS CLEAR AS THE FLOWING WATER UPSTREAM FROM THE WORK AREA.

6. ALL UNUSED, EXCAVATED MATERIAL AND/OR CONSTRUCTION DEBRIS SHALL BE IMMEDIATELY REMOVED UPON COMPLETION OF CONSTRUCTION, A MIN. 100' FROM THE WATERWAY. PLACE IN LOCATIONS APPROVED BY OWNER.

7. PROPOSED 144"X144" BOX CULVERT EXCEEDS NYSDEC REQUIREMENT FOR CARRYING AT LEAST A 50-YEAR EVENT

8. CONTRACTOR SHALL MEET ALL APPLICABLE CONDITIONS NOTED IN THE PERMIT ISSUED FOR THIS PROJECT

NO.	DATE	REVISION	BY
00	10/2016	ORIGINAL ISSUE	ATB
01	12/28/16	GOSR REVIEW ISSUE	BSN
02	2/24/17	ENVIRONMENTAL REVIEW ISSUE	BSN

JME
New York Office
7 South Church Street Schenectady, New York 12305
Ph: 518 382 1774 Fax: 518 382 1776
www.mcdonaldengineers.com www.primeeng.com

PROJ. ENGR.: ATB | DRAWN BY: BSN | CHECKED BY: JMM

LICENSED PROFESSIONAL ENGINEER JOHN W. McDONALD NO. 54566 STATE OF NEW YORK

UNAUTHORIZED ALTERATIONS TO THIS DOCUMENT IS A VIOLATION OF SECTION 7209 SUBDIVISION 2 OF NEW YORK STATE EDUCATION LAW

MONTGOMERY COUNTY

CULVERT REPLACEMENT

CONTRACT NO. 3 - TOWN OF AMSTERDAM CULVERT REPLACEMENT
CONTRACT NO. 4 - TOWN OF FLORIDA CULVERT REPLACEMENT

SHEET TITLE:

MCKINNEY ROAD 4B
SITE PLAN

SCALE: AS SHOWN

FILE NO.: 134-1601-250

DATE: OCTOBER 2016

SHEET NO.: B18

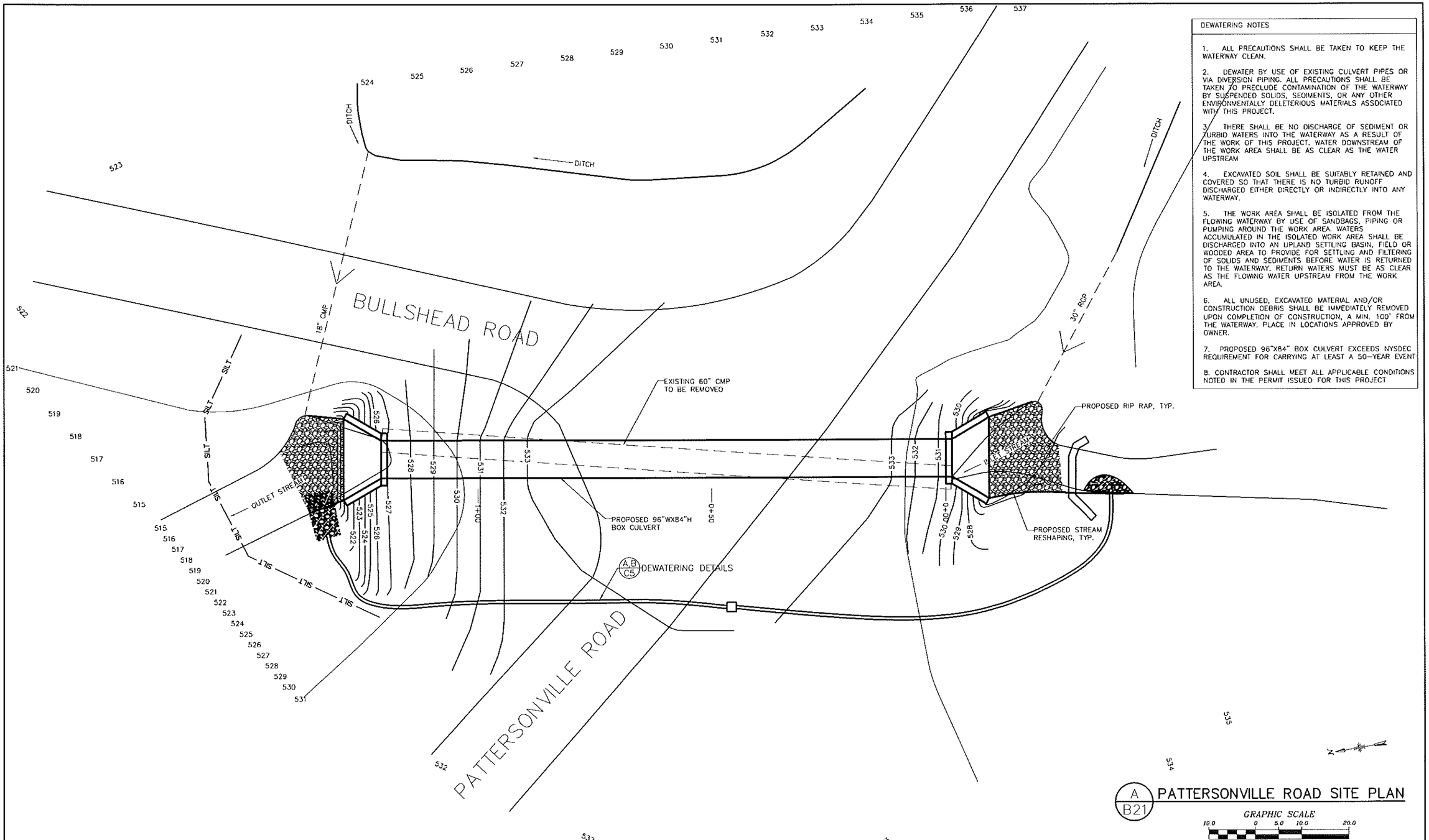

DEWATERING NOTES

1. ALL PRECAUTIONS SHALL BE TAKEN TO KEEP THE WATERWAY CLEAN.

2. DEWATER BY USE OF EXISTING CULVERT PIPES OR VIA DIVERSION PIPING. ALL PRECAUTIONS SHALL BE TAKEN TO PRECLUDE CONTAMINATION OF THE WATERWAY BY SUSPENDED SOLIDS, SEDIMENTS, OR ANY OTHER ENVIRONMENTALLY DELETERIOUS MATERIALS ASSOCIATED WITH THIS PROJECT.

3. THERE SHALL BE NO DISCHARGE OF SEDIMENT OR TURBID WATERS INTO THE WATERWAY AS A RESULT OF THE WORK OF THIS PROJECT. WATER DOWNSTREAM OF THE WORK AREA SHALL BE AS CLEAR AS THE WATER UPSTREAM

4. EXCAVATED SOIL SHALL BE SUITABLY RETAINED AND COVERED SO THAT THERE IS NO TURBID RUNOFF DISCHARGED EITHER DIRECTLY OR INDIRECTLY INTO ANY WATERWAY.

5. THE WORK AREA SHALL BE ISOLATED FROM THE FLOWING WATERWAY BY USE OF SANDBAGS, PIPING OR PUMPING AROUND THE WORK AREA. WATERS ACCUMULATED IN THE ISOLATED WORK AREA SHALL BE DISCHARGED INTO AN UPLAND SETTLING BASIN, FIELD OR WOODED AREA TO PROVIDE FOR SETTLING AND FILTERING OF SOLIDS AND SEDIMENTS BEFORE WATER IS RETURNED TO THE WATERWAY. RETURN WATERS MUST BE AS CLEAR AS THE FLOWING WATER UPSTREAM FROM THE WORK AREA.

6. ALL UNUSED, EXCAVATED MATERIAL AND/OR CONSTRUCTION DEBRIS SHALL BE IMMEDIATELY REMOVED UPON COMPLETION OF CONSTRUCTION, A MIN. 100' FROM THE WATERWAY. PLACE IN LOCATIONS APPROVED BY OWNER.

7. PROPOSED 96"X84" BOX CULVERT EXCEEDS NYSDEC REQUIREMENT FOR CARRYING AT LEAST A 50-YEAR EVENT

8. CONTRACTOR SHALL MEET ALL APPLICABLE CONDITIONS NOTED IN THE PERMIT ISSUED FOR THIS PROJECT

A/B21 PATTERSONVILLE ROAD SITE PLAN

GRAPHIC SCALE 10.0 0 5.0 10.0 20.0

NO.	DATE	REVISION	BY
00	10/2016	ORIGINAL ISSUE	ATB
01	12/28/16	GOSR REVIEW ISSUE	BSN
02	2/24/17	ENVIRONMENTAL REVIEW ISSUE	BSN

JME
John M. McDonald Engineering, P.C.
a division of PRIME Group
New York Office
7 South Church Street Schenectady, New York 12305
Ph: 518 382 1774 Fax: 518 382 1776
www.mcdonaldengineers.com www.primeeng.com

PROJ. ENGR.: ATB | DRAWN BY: BSN | CHECKED BY: JMM

UNAUTHORIZED ALTERATIONS TO THIS DOCUMENT IS A VIOLATION OF SECTION 7209 SUBDIVISION 2 OF NEW YORK STATE EDUCATION LAW

MONTGOMERY COUNTY

MONTGOMERY COUNTY CULVERT REPLACEMENT

SHEET TITLE:

PATTERSONVILLE ROAD SITE PLAN

SCALE: AS SHOWN

FILE NO.: 134-1601-260

DATE: OCTOBER 2016

SHEET NO.: B21

DEWATERING NOTES

1. ALL PRECAUTIONS SHALL BE TAKEN TO KEEP THE WATERWAY CLEAN.

2. DEWATER BY USE OF EXISTING CULVERT PIPES OR VIA DIVERSION PIPING. ALL PRECAUTIONS SHALL BE TAKEN TO PRECLUDE CONTAMINATION OF THE WATERWAY BY SUSPENDED SOLIDS, SEDIMENTS, OR ANY OTHER ENVIRONMENTALLY DELETERIOUS MATERIALS ASSOCIATED WITH THIS PROJECT.

3. THERE SHALL BE NO DISCHARGE OF SEDIMENT OR TURBID WATERS INTO THE WATERWAY AS A RESULT OF THE WORK OF THIS PROJECT. WATER DOWNSTREAM OF THE WORK AREA SHALL BE AS CLEAR AS THE WATER UPSTREAM

4. EXCAVATED SOIL SHALL BE SUITABLY RETAINED AND COVERED SO THAT THERE IS NO TURBID RUNOFF DISCHARGED EITHER DIRECTLY OR INDIRECTLY INTO ANY WATERWAY.

5. THE WORK AREA SHALL BE ISOLATED FROM THE FLOWING WATERWAY BY USE OF SANDBAGS, PIPING OR PUMPING AROUND THE WORK AREA. WATERS ACCUMULATED IN THE ISOLATED WORK AREA SHALL BE DISCHARGED INTO AN UPLAND SETTLING BASIN, FIELD OR WOODED AREA TO PROVIDE FOR SETTLING AND FILTERING OF SOLIDS AND SEDIMENTS BEFORE WATER IS RETURNED TO THE WATERWAY. RETURN WATERS MUST BE AS CLEAR AS THE FLOWING WATER UPSTREAM FROM THE WORK AREA.

6. ALL UNUSED, EXCAVATED MATERIAL AND/OR CONSTRUCTION DEBRIS SHALL BE IMMEDIATELY REMOVED UPON COMPLETION OF CONSTRUCTION, A MIN. 100' FROM THE WATERWAY. PLACE IN LOCATIONS APPROVED BY OWNER.

7. PROPOSED 144"X84" BOX CULVERT EXCEEDS NYSDEC REQUIREMENT FOR CARRYING AT LEAST A 50-YEAR EVENT

8. CONTRACTOR SHALL MEET ALL APPLICABLE CONDITIONS NOTED IN THE PERMIT ISSUED FOR THIS PROJECT

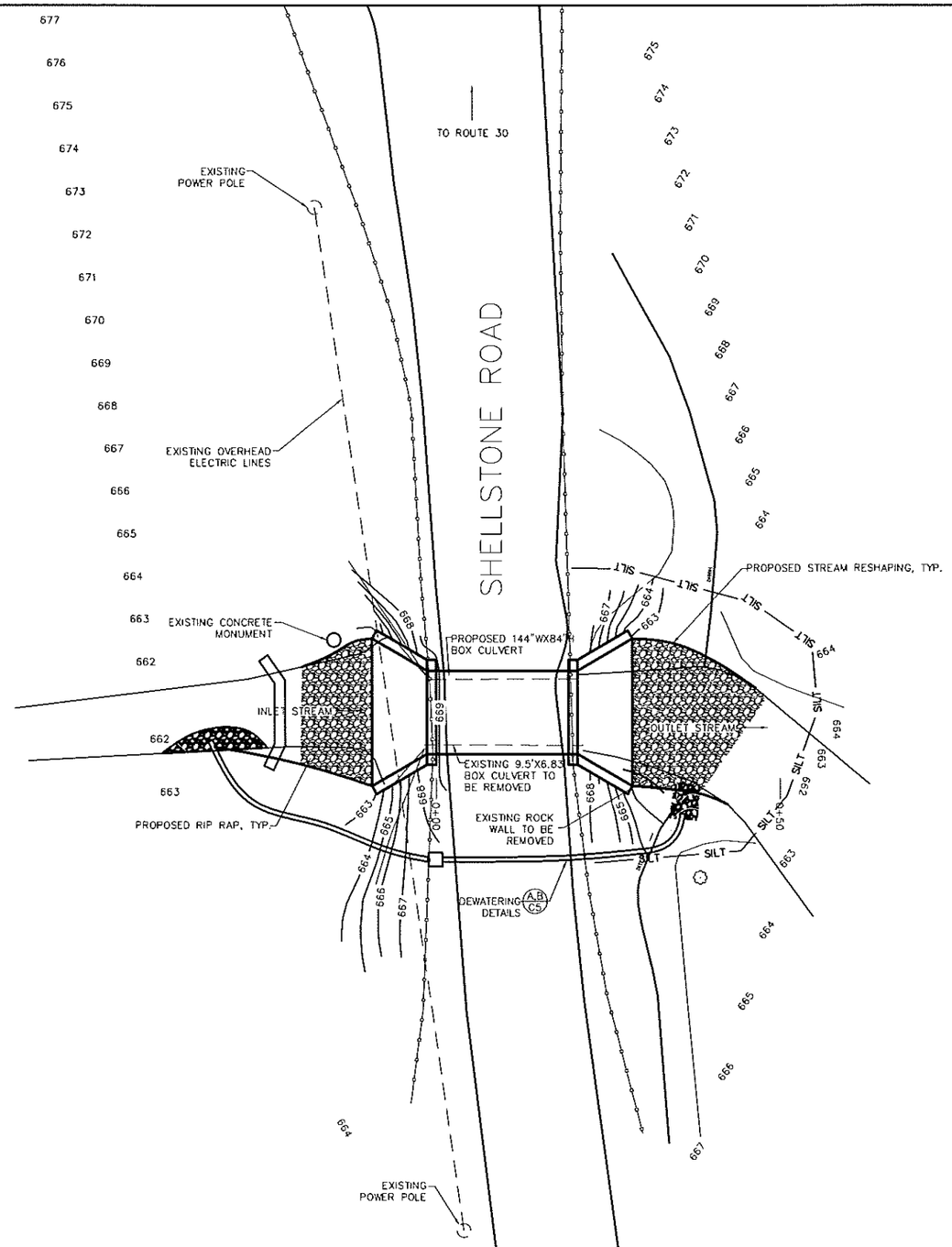

A/B24 SHELLSTONE ROAD SITE PLAN

GRAPHIC SCALE

10.0 0 5.0 10.0 20.0

NO.	DATE	REVISION	BY
00	10/2016	ORIGINAL ISSUE	ATB
01	12/28/16	GOSR REVIEW ISSUE	BSN
02	2/24/17	ENVIRONMENTAL REVIEW ISSUE	BSN

JME
John M. McDonald Engineering, P.C.
a member of PRIME Group

New York Office
7 South Church Street Schenectady, New York 12305
Ph: 518 382 1774 Fax: 518 382 1776
www.mcdonaldengineers.com www.primeeng.com

PROJ. ENGR.: ATB | DRAWN BY: BSN | CHECKED BY: JMM

PROFESSIONAL ENGINEER JOHN M. McDONALD NO. 54508 STATE OF NEW YORK

UNAUTHORIZED ALTERATIONS TO THIS DOCUMENT IS A VIOLATION OF SECTION 7209 SUBDIVISION 2 OF NEW YORK STATE EDUCATION LAW.

MONTGOMERY COUNTY

CULVERT REPLACEMENT

CONTRACT NO. 3 - TOWN OF AMSTERDAM CULVERT REPLACEMENT
CONTRACT NO. 4 - TOWN OF FLORIDA CULVERT REPLACEMENT

SHEET TITLE:

SHELLSTONE ROAD
SITE PLAN

SCALE: AS SHOWN

FILE NO.: 134-1601-270

DATE: OCTOBER 2016

SHEET NO.: B24

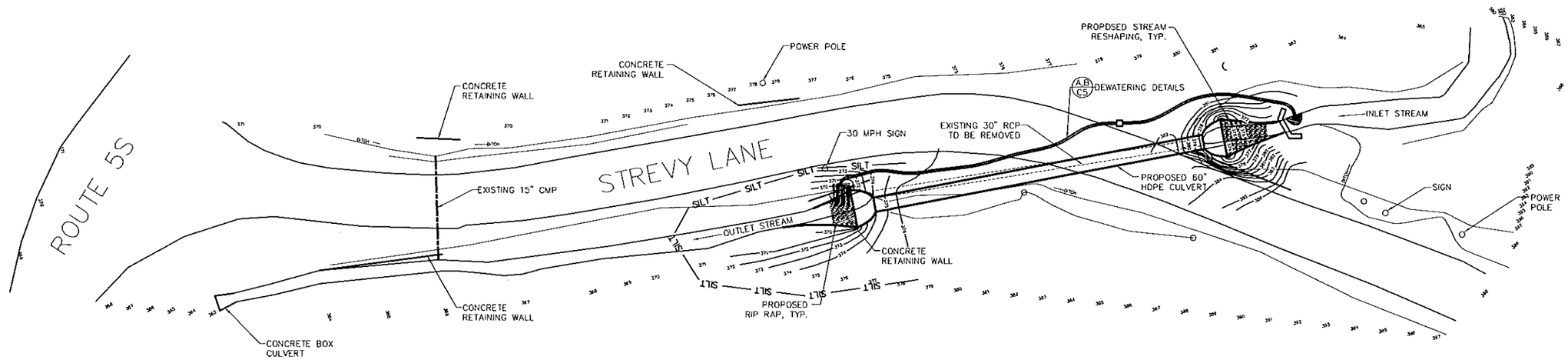

DEWATERING NOTES

1. ALL PRECAUTIONS SHALL BE TAKEN TO KEEP THE WATERWAY CLEAN.

2. DEWATER BY USE OF EXISTING CULVERT PIPES OR VIA DIVERSION PIPING. ALL PRECAUTIONS SHALL BE TAKEN TO PRECLUDE CONTAMINATION OF THE WATERWAY BY SUSPENDED SOLIDS, SEDIMENTS, OR ANY OTHER ENVIRONMENTALLY DELETERIOUS MATERIALS ASSOCIATED WITH THIS PROJECT.

3. THERE SHALL BE NO DISCHARGE OF SEDIMENT OR TURBID WATERS INTO THE WATERWAY AS A RESULT OF THE WORK OF THIS PROJECT. WATER DOWNSTREAM OF THE WORK AREA SHALL BE AS CLEAR AS THE WATER UPSTREAM

4. EXCAVATED SOIL SHALL BE SUITABLY RETAINED AND COVERED SO THAT THERE IS NO TURBID RUNOFF DISCHARGED EITHER DIRECTLY OR INDIRECTLY INTO ANY WATERWAY.

5. THE WORK AREA SHALL BE ISOLATED FROM THE FLOWING WATERWAY BY USE OF SANDBAGS, PIPING OR PUMPING AROUND THE WORK AREA. WATERS ACCUMULATED IN THE ISOLATED WORK AREA SHALL BE DISCHARGED INTO AN UPLAND SETTLING BASIN, FIELD OR WOODED AREA TO PROVIDE FOR SETTLING AND FILTERING OF SOLIDS AND SEDIMENTS BEFORE WATER IS RETURNED TO THE WATERWAY. RETURN WATERS MUST BE AS CLEAR AS THE FLOWING WATER UPSTREAM FROM THE WORK AREA.

6. ALL UNUSED, EXCAVATED MATERIAL AND/OR CONSTRUCTION DEBRIS SHALL BE IMMEDIATELY REMOVED UPON COMPLETION OF CONSTRUCTION, A MIN. 100' FROM THE WATERWAY. PLACE IN LOCATIONS APPROVED BY OWNER.

7. PROPOSED 60" DIAMETER, HDPE PIPE EXCEEDS NYSDEC REQUIREMENT FOR CARRYING AT LEAST A 50-YEAR EVENT

8. CONTRACTOR SHALL MEET ALL APPLICABLE CONDITIONS NOTED IN THE PERMIT ISSUED FOR THIS PROJECT

A B27 STREVY LANE SITE PLAN

GRAPHIC SCALE
20.0 0 10.0 20.0 40.0

NO.	DATE	REVISION	BY
00	10/2016	ORIGINAL ISSUE	ATB
01	12/28/16	GOSR REVIEW ISSUE	BSN
02	2/24/17	ENVIRONMENTAL REVIEW ISSUE	BSN

JME
John M. McDonald Engineering, P.C.
a member of EBI Consulting

New York Office
7 South Church Street Schenectady, New York 12305
Ph: 518 382 1774 Fax: 518 382 1776
www.mcdonaldengineers.com www.primeeng.com

PROJ. ENGR.: ATB | DRAWN BY: BSN | CHECKED BY: JMM

JOHN M. MCDONALD PROFESSIONAL ENGINEER STATE OF NEW YORK No. 54326

UNAUTHORIZED ALTERATIONS TO THIS DOCUMENT IS A VIOLATION OF SECTION 7209 SUBDIVISION 2 OF NEW YORK STATE EDUCATION LAW.

MONTGOMERY COUNTY

CULVERT REPLACEMENT

CONTRACT NO. 3 - TOWN OF AMSTERDAM CULVERT REPLACEMENT
CONTRACT NO. 4 - TOWN OF FLORIDA CULVERT REPLACEMENT

SHEET TITLE:

STREVY LANE
SITE PLAN

SCALE: AS SHOWN

FILE NO.: 134-1601-280

DATE: OCTOBER 2016

SHEET NO.: B27

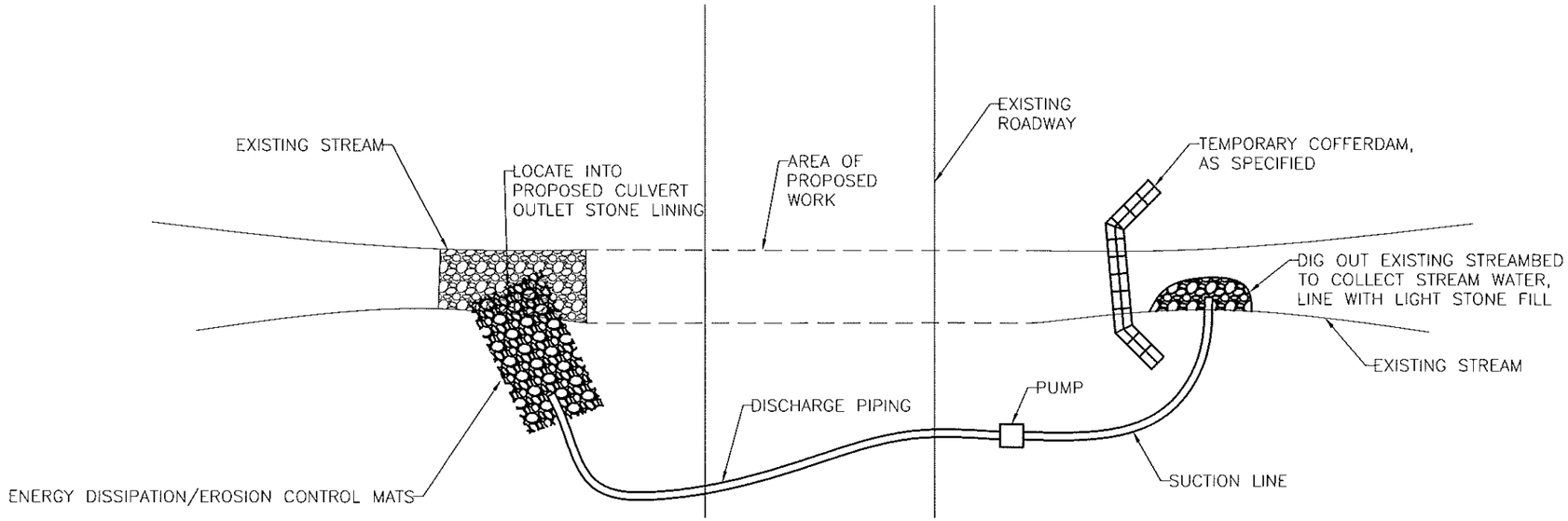

A / C5 DEWATERING PLAN

DO NOT SCALE

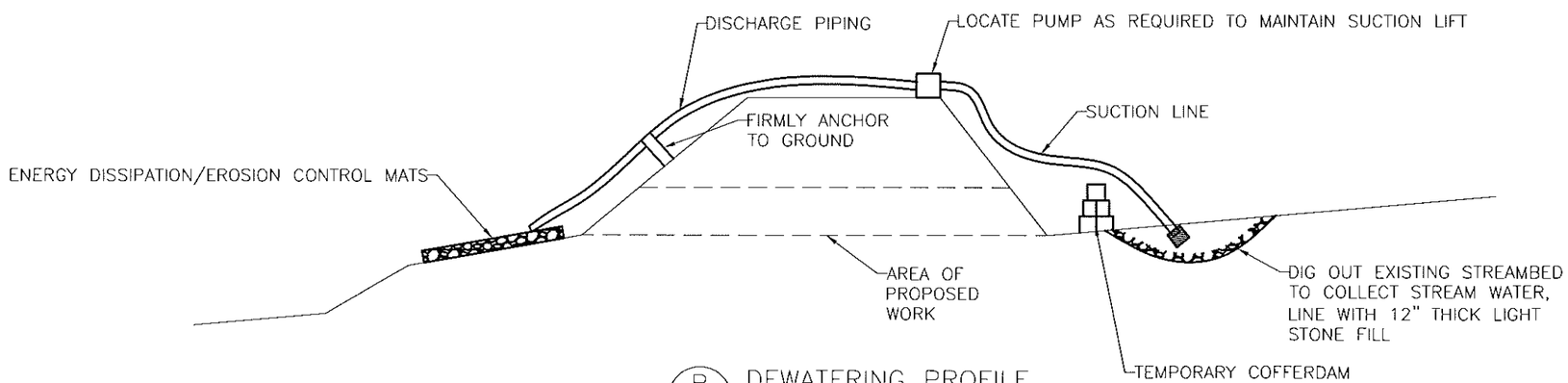

B / C5 DEWATERING PROFILE

DO NOT SCALE

NO.	DATE	REVISION	BY
00	4/2017	ORIGINAL ISSUE	ATB

JME
John M. McDonald Engineering, P.E.

New York Office
7 South Church Street Schenectady, New York 12305
Ph: 518 382 1774 Fax: 518 382 1776
www.mcdonaldengineers.com www.primeeng.com

PROJ. ENGR.: ATB | DRAWN BY: BSN | CHECKED BY: JMM

UNAUTHORIZED ALTERATIONS TO THIS DOCUMENT IS A VIOLATION OF SECTION 7209 SUBDIVISION 2 OF NEW YORK STATE EDUCATION LAW

MONTGOMERY COUNTY

CULVERT REPLACEMENT

CONTRACT NO. 3 - TOWN OF AMSTERDAM CULVERT REPLACEMENT
CONTRACT NO. 4 - TOWN OF FLORIDA CULVERT REPLACEMENT

SHEET TITLE:

DEWATERING DETAILS

SCALE: AS SHOWN

FILE NO.: 134-1601-340

DATE: APRIL 2017

SHEET NO.: C5

John M. McDonald Engineering
a member of PRIME Group

February 24, 2017

Mr. Angelo Marcuccio
Deputy Regional Permit Administrator
NYSDEC Region 5 Division of Environmental Permits
1130 North Westcott Road
Schenectady, NY 12306-2014

Re: Montgomery County
Applications for Permit
Montgomery County Culvert Replacement Project
Project No. 134-1601

Dear Mr. Marcuccio:

Montgomery County will be replacing eleven culverts throughout the county in the Towns of Amsterdam and Florida. On behalf of the County, we have prepared the attached Permit Application Package for all eleven culverts for your review and approval. We have also submitted this package to ACOE and GOSR for jurisdictional determination, Applicable Nationwide Permits required, and environmental review.

This work involves the replacement of undersized, deteriorated culverts that have been problematic during high flow events. As a result the County has been suffering from flooding problems at the various sites.

All streams that are associated with these culverts are classified as Class C streams. The culverts were sized to provide the necessary flow area to pass a 100-year flood as required by GOSR, the funding Agency for this project.

Depending on the flow at a particular site, either HDPE or precast concrete box culverts are specified and shown. HDPE was used wherever possible to save on costs. All culverts were upsized to accommodate the required 20% pipe embedment into the stream while still carrying the 100-year flow at a maximum slope of 3%.

In addition to the joint permit application for each site, a USGS site location, H&H analysis, photographs, and drawings are included in the permit package.

The County would like to start construction this summer and have all work completed this year. Following your review, please feel free to contact me if you have any questions or need anything further.

Sincerely,

A. Thomas Bates, P.E.

cc. Eric Mead, Commissioner
Brad Sherwood, ACOE
Laurice Salamack, GOSR
Steven Kirk, GOSR

MONTGOMERY COUNTY
CULVERT REPLACEMENT PROJECT

TOWNS OF FLORIDA & AMSTERDAM, NY
JOINT APPLICATION FOR PERMIT

PREPARED FOR:
Montgomery County
6 Park Street
Fonda, NY 12068

PREPARED BY:
John M. McDonald Engineering
7 South Church Street
Schenectady, NY 12305

Project No. 134-1601
Submitted: February 24, 2017

JME
John M. McDonald Engineering
a member of PRIME Group

New York Office • 7 South Church Street • Schenectady, New York 12305
Ph: 518 382 1774 Fax: 518 382 1776
www.mcdonaldengineers.com • www. primeeng.com

MONTGOMERY COUNTY
CULVERT REPLACEMENT

Table of Contents

Permit Application Packages	No. of Pages
Town of Florida, Bullshead Road Culvert Replacement	11
Town of Florida, Fort Hunter Road Culvert Replacement	11
Town of Florida, Hartley Road Culvert Replacement	11
Town of Florida, Langley Road Culvert Replacement	11
Town of Florida, McKinney Road 4A Culvert Replacement	11
Town of Florida, McKinney Road 4B Culvert Replacement	11
Town of Florida, Pattersonville Road Culvert Replacement	11
Town of Florida, Shellstone Road Culvert Replacement	11
Town of Florida, Strevy Lane Culvert Replacement	11
Town of Amsterdam, McKay Road 1 Culvert Replacement	11
Town of Amsterdam, McKay Road 2 Culvert Replacement	11

EXHIBIT 1 - **Photographs**

EXHIBIT 2 - **H&H Analysis**

EXHIBIT 3 - **Drawings**

PERMIT PACKAGE

TOWN OF FLORIDA
BULLSHEAD ROAD CULVERT REPLACEMENT

- PERMISSION TO INSPECT PROPERTY – 1 PAGE
- JOINT APPLICATION FORM – 4 PAGES
- SHORT ENVIRONMENTAL ASSESSMENT FORM PART 1 – 3 PAGES
- SHORT ENVIRONMENTAL ASSESSMENT FORM PART 2 – 2 PAGES
- SITE LOCATION, USGS QUADRANGLE – 1 PAGE

NEW YORK STATE OF OPPORTUNITY. | Department of Environmental Conservation

PERMISSION TO INSPECT PROPERTY

By signing this permission form for submission with an application for a permit(s) to the Department of Environmental Conservation ("DEC"), the signer consents to inspection by DEC staff of the project site or facility for which a permit is sought and, to the extent necessary, areas adjacent to the project site or facility. This consent allows DEC staff to enter upon and pass through such property in order to inspect the project site or facility, without prior notice, between the hours of 7:00 a.m. and 7:00 p.m., Monday through Friday. If DEC staff should wish to conduct an inspection at any other times, DEC staff will so notify the applicant and will obtain a separate consent for such an inspection.

Inspections may take place as part of the application review prior to a decision to grant or deny the permit(s) sought. By signing this consent form, the signer agrees that this consent remains in effect as long as the application is pending, and is effective regardless of whether the signer, applicant or an agent is present at the time of the inspection. In the event that the project site or facility is posted with any form of "posted" or "keep out" notices, or fenced in with an unlocked gate, this permission authorizes DEC staff to disregard such notices or unlocked gates at the time of inspection.

The signer further agrees that during an inspection, DEC staff may, among other things, take measurements, may analyze physical characteristics of the site including, but not limited to, soils and vegetation (taking samples for analysis), and may make drawings and take photographs.

Failure to grant consent for an inspection is grounds for, and may result in, denial of the permit(s) sought by the application.

Permission is granted for inspection of property located at the following address(es):

Located in the Town of Florida approximately 400 feet north
of the intersection of Thayer Road and Bullshead Road

*By signing this form, I affirm under penalty of perjury that I am authorized to give consent to entry by DEC staff as described above. I understand that false statements made herein are punishable as a Class A misdemeanor pursuant to Section 210.45 of the Penal Law.**

Eric Mead, Commissioner		2-21-17
Print Name and Title	Signature	Date

*The signer of this form must be an individual or authorized representative of a legal entity that:

- owns fee title and is in possession of the property identified above;
- maintains possessory interest in the property through a lease, rental agreement or other legally binding agreement; or
- is provided permission to act on behalf of an individual or legal entity possessing fee title or other possessory interest in the property for the purpose of consenting to inspection of such property.

NEW YORK STATE | Department of Environmental Conservation | Office of General Services | Department of State

US Army Corps of Engineers

JOINT APPLICATION FORM

For Permits for activities activities affecting streams, waterways, waterbodies, wetlands, coastal areas, sources of water, and endangered and threatened species.

You must separately apply for and obtain Permits from each involved agency before starting work. Please read all instructions.

1. **Applications To:**

>NYS Department of Environmental Conservation ☑ Check here to confirm you sent this form to NYSDEC.

Check all permits that apply:

- ☑ Stream Disturbance
- ☐ Excavation and Fill in Navigable Waters
- ☐ Docks, Moorings or Platforms
- ☐ Dams and Impoundment Structures
- ☐ 401 Water Quality Certification
- ☐ Freshwater Wetlands
- ☐ Tidal Wetlands
- ☐ Wild, Scenic and Recreational Rivers
- ☐ Coastal Erosion Management
- ☐ Water Withdrawal
- ☐ Long Island Well
- ☐ Incidental Take of Endangered / Threatened Species

>US Army Corps of Engineers ☑ Check here to confirm you sent this form to USACE.

Check all permits that apply: ☐ Section 404 Clean Water Act ☐ Section 10 Rivers and Harbors Act

Is the project Federally funded? ☐ Yes ☑ No

If yes, name of Federal Agency:

General Permit Type(s), if known:

Preconstruction Notification: ☐ Yes ☑ No

>NYS Office of General Services ☐ Check here to confirm you sent this form to NYSOGS.

Check all permits that apply:

☐ State Owned Lands Under Water

☐ Utility Easement (pipelines, conduits, cables, etc.) ☐ Docks, Moorings or Platforms

>NYS Department of State ☐ Check here to confirm you sent this form to NYSDOS.

Check if this applies: ☐ Coastal Consistency Concurrence

2. **Name of Applicant**: Montgomery County

Taxpayer ID (if applicant is NOT an individual): 14-6002568

Mailing Address: 6 Park Street

Post Office / City: Fonda

State: NY

Zip: 12068

Telephone: (518) 853-3814

Email: emead@co.montgomery.ny.us

Applicant Must be (check all that apply): ☑ Owner ☑ Operator ☐ Lessee

3. **Name of Property Owner (if different than Applicant)**

Mailing Address

Post Office / City

State

Zip

Telephone

Email

For Agency Use Only	Agency Application Number:

4. Name of Contact / Agent

A. Thomas Bates, PE

Mailing Address	Post Office / City	State	Zip
7 South Church Street	Schenectady	NY	12305

Telephone (518) 382-1774 Email tbates@primeeng.com

5. Project / Facility Name

Bullshead Road Culvert Replacement

Property Tax Map Section / Block / Lot Number: N/A

Project Street Address, if applicable	Post Office / City	State	Zip
Bullshead Road	Amsterdam	NY	12010

Provide directions and distances to roads, intersections, bridges and bodies of water

Located in the Town of Florida approximately 400 feet north of the intersection of Thayer Road and Bullshead Road

☑ Town ☐ Village ☐ City

County	Stream/Waterbody Name
Montgomery	Tributary to Terwilleger Creek

Florida

Project Location Coordinates: Enter Latitude and Longitude in degrees, minutes, seconds:

Latitude: N42 ° 53 ' 10 " Longitude: W74 ° 09 ' 12 "

6. Project Description: Provide the following information about your project. Continue each response and provide any additional information on other pages. **Attach plans on separate pages.**

a. Purpose of the proposed project:

This project involves the replacement of an undersized culvert under Bullshead Road that allows a tributary to Terwilleger Creek to flow beneath the roadway. All work will be completed as per the plans submitted with the application entitled "Montgomery County, Montgomery County Culvert Replacement Contract No. 1 - Town of Amsterdam, Contract No. 2 - Town of Florida by John M. McDonald Engineering."

b. Description of current site conditions:

c. Proposed site changes:

d. Type of structures and fill materials to be installed, and quantity of materials to be used (e.g., square feet of coverage, cubic yards of fill material, structures below ordinary/mean high water, etc.):

45 feet of HDPE pipe

e. Area of excavation or dredging, volume of material to be removed, location of dredged material placement:

f. Is tree cutting or clearing proposed? ☐ Yes If Yes, explain below. ☑ No

Timing of the proposed cutting or clearing (month/year):

Number of trees to be cut: Acreage of trees to be cleared:

g. Work methods and type of equipment to be used:

h. Describe the planned sequence of activities:

i. Pollution control methods and other actions proposed to mitigate environmental impacts:

j. Erosion and silt control methods that will be used to prevent water quality impacts:

Silt fence

k. Alternatives considered to avoid regulated areas. If no feasible alternatives exist, explain how the project will minimize impacts:

l. Proposed use: ☐ Private ☑ Public ☐ Commercial

m. Proposed Start Date: October 2016 Estimated Completion Date: November 2016

n. Has work begun on project? ☐ Yes If Yes, explain below. ☑ No

o. Will project occupy Federal, State, or Municipal Land? ☑ Yes If Yes, explain below. ☐ No

The Town of Florida owns the Bullshead Road right-of-way

p. List any previous DEC, USACE, OGS or DOS Permit / Application numbers for activities at this location:

N/A

q. Will this project require additional Federal, State, or Local authorizations, including zoning changes?

☑ Yes If Yes, list below. ☐ No

NYS DEC & USACE Joint Application for Permit

7. Signatures.

Applicant and Owner (If different) must sign the application.
Append additional pages of this Signature section if there are multiple Applicants, Owners or Contact/Agents.

I hereby affirm that information provided on this form and all attachments submitted herewith is true to the best of my knowledge and belief.

Permission to Inspect - I hereby consent to Agency inspection of the project site and adjacent property areas. Agency staff may enter the property without notice between 7:00 am and 7:00 pm, Monday - Friday. Inspection may occur without the owner, applicant or agent present. If the property is posted with "keep out" signs or fenced with an unlocked gate, Agency staff may still enter the property. Agency staff may take measurements, analyze site physical characteristics, take soil and vegetation samples, sketch and photograph the site. I understand that failure to give this consent may result in denial of the permit(s) sought by this application.

False statements made herein are punishable as a Class A misdemeanor pursuant to Section 210.45 of the NYS Penal Law. Further, the applicant accepts full responsibility for all damage, direct or indirect, of whatever nature, and by whomever suffered, arising out of the project described herein and agrees to indemnify and save harmless the State from suits, actions, damages and costs of every name and description resulting from said project. In addition, Federal Law, 18 U.S.C., Section 1001 provides for a fine of not more than $10,000 or imprisonment for not more than 5 years, or both where an applicant knowingly and willingly falsifies, conceals, or covers up a material fact; or knowingly makes or uses a false, fictitious or fraudulent statement.

Signature of Applicant: [signature] Date: 2-21-17

Applicant Must be (check all that apply): ☑ Owner ☑ Operator ☐ Lessee

Printed Name: Eric Mead Title: Commissioner

Signature of Owner (if different than Applicant) Date:

Printed Name: Title:

Signature of Contact / Agent [signature] Date: 2/24/17

Printed Name: A. Thomas Bates, PE Title: Project Engineer

For Agency Use Only **DETERMINATION OF NO PERMIT REQUIRED**

Agency Application Number

(Agency Name) has determined that No Permit is required from this Agency for the project described in this application.

Agency Representative:

Printed Name: Title:

Signature: Date:

Short Environmental Assessment Form
Part 1 - Project Information

Instructions for Completing

Part 1 - Project Information. The applicant or project sponsor is responsible for the completion of Part 1. Responses become part of the application for approval or funding, are subject to public review, and may be subject to further verification. Complete Part 1 based on information currently available. If additional research or investigation would be needed to fully respond to any item, please answer as thoroughly as possible based on current information.

Complete all items in Part 1. You may also provide any additional information which you believe will be needed by or useful to the lead agency; attach additional pages as necessary to supplement any item.

Part 1 - Project and Sponsor Information

Name of Action or Project:
Bullshead Road Culvert Replacement

Project Location (describe, and attach a location map):
Bullshead Road, Montgomery County, Florida, New York

Brief Description of Proposed Action:
Replacement of an existing culvert pipe within the Bullshead Road right-of-way that allows water flow for a tributary to Terwilleger Creek to cross beneath the road surface. The existing culvert pipe is undersized and does not have enough cover.

Project will replace the existing 48" HDPE culvert with a 66" HDPE culvert.

Name of Applicant or Sponsor:	Telephone: (518) 853-3814
Montgomery County	E-Mail: emead@co.montgomery.ny.us

Address:
6 Park Street

City/PO:	State:	Zip Code:
Fonda	NY	12068

	NO	YES
1. Does the proposed action only involve the legislative adoption of a plan, local law, ordinance, administrative rule, or regulation? If Yes, attach a narrative description of the intent of the proposed action and the environmental resources that may be affected in the municipality and proceed to Part 2. If no, continue to question 2.	☑	☐
2. Does the proposed action require a permit, approval or funding from any other governmental Agency? If Yes, list agency(s) name and permit or approval: NYS DEC & USACE Joint Application for Permit	☐	☑

3.a. Total acreage of the site of the proposed action? <1 acres
b. Total acreage to be physically disturbed? <1 acres
c. Total acreage (project site and any contiguous properties) owned or controlled by the applicant or project sponsor? <1 acres

4. Check all land uses that occur on, adjoining and near the proposed action.
☐ Urban ☑ Rural (non-agriculture) ☐ Industrial ☐ Commercial ☑ Residential (suburban)
☑ Forest ☑ Agriculture ☐ Aquatic ☐ Other (specify): _____
☐ Parkland

	NO	YES	N/A
5. Is the proposed action,			
a. A permitted use under the zoning regulations?	☐	☑	☐
b. Consistent with the adopted comprehensive plan?	☐	☑	☐

	NO	YES
6. Is the proposed action consistent with the predominant character of the existing built or natural landscape?	☐	☑
7. Is the site of the proposed action located in, or does it adjoin, a state listed Critical Environmental Area? If Yes, identify: _____	☑	☐
8. a. Will the proposed action result in a substantial increase in traffic above present levels?	☑	☐
b. Are public transportation service(s) available at or near the site of the proposed action?	☑	☐
c. Are any pedestrian accommodations or bicycle routes available on or near site of the proposed action?	☑	☐
9. Does the proposed action meet or exceed the state energy code requirements? If the proposed action will exceed requirements, describe design features and technologies: _____	☑	☐
10. Will the proposed action connect to an existing public/private water supply? If No, describe method for providing potable water: _____	☑	☐
11. Will the proposed action connect to existing wastewater utilities? If No, describe method for providing wastewater treatment: _____	☑	☐
12. a. Does the site contain a structure that is listed on either the State or National Register of Historic Places?	☑	☐
b. Is the proposed action located in an archeological sensitive area?	☑	☐
13. a. Does any portion of the site of the proposed action, or lands adjoining the proposed action, contain wetlands or other waterbodies regulated by a federal, state or local agency?	☐	☑
b. Would the proposed action physically alter, or encroach into, any existing wetland or waterbody? If Yes, identify the wetland or waterbody and extent of alterations in square feet or acres: _____	☑	☐

14. Identify the typical habitat types that occur on, or are likely to be found on the project site. Check all that apply:
☐ Shoreline ☑ Forest ☑ Agricultural/grasslands ☐ Early mid-successional
☐ Wetland ☐ Urban ☐ Suburban

	NO	YES
15. Does the site of the proposed action contain any species of animal, or associated habitats, listed by the State or Federal government as threatened or endangered?	☑	☐
16. Is the project site located in the 100 year flood plain?	☑	☐
17. Will the proposed action create storm water discharge, either from point or non-point sources? If Yes, a. Will storm water discharges flow to adjacent properties? ☐ NO ☐ YES	☑	☐
b. Will storm water discharges be directed to established conveyance systems (runoff and storm drains)? If Yes, briefly describe: ☐ NO ☐ YES _____		

	NO	YES
18. Does the proposed action include construction or other activities that result in the impoundment of water or other liquids (e.g. retention pond, waste lagoon, dam)? If Yes, explain purpose and size:	✓	
19. Has the site of the proposed action or an adjoining property been the location of an active or closed solid waste management facility? If Yes, describe:	✓	
20. Has the site of the proposed action or an adjoining property been the subject of remediation (ongoing or completed) for hazardous waste? If Yes, describe:	✓	

I AFFIRM THAT THE INFORMATION PROVIDED ABOVE IS TRUE AND ACCURATE TO THE BEST OF MY KNOWLEDGE

Applicant/sponsor name: Montgomery County Date: 2-21-17

Signature:

PRINT FORM

Agency Use Only [If applicable]	
Project:	
Date:	

Short Environmental Assessment Form
Part 2 - Impact Assessment

Part 2 is to be completed by the Lead Agency.
Answer all of the following questions in Part 2 using the information contained in Part 1 and other materials submitted by the project sponsor or otherwise available to the reviewer. When answering the questions the reviewer should be guided by the concept "Have my responses been reasonable considering the scale and context of the proposed action?"

	No, or small impact may occur	Moderate to large impact may occur
1. Will the proposed action create a material conflict with an adopted land use plan or zoning regulations?	☑	☐
2. Will the proposed action result in a change in the use or intensity of use of land?	☑	☐
3. Will the proposed action impair the character or quality of the existing community?	☑	☐
4. Will the proposed action have an impact on the environmental characteristics that caused the establishment of a Critical Environmental Area (CEA)?	☑	☐
5. Will the proposed action result in an adverse change in the existing level of traffic or affect existing infrastructure for mass transit, biking or walkway?	☑	☐
6. Will the proposed action cause an increase in the use of energy and it fails to incorporate reasonably available energy conservation or renewable energy opportunities?	☑	☐
7. Will the proposed action impact existing: a. public / private water supplies?	☑	☐
b. public / private wastewater treatment utilities?	☑	☐
8. Will the proposed action impair the character or quality of important historic, archaeological, architectural or aesthetic resources?	☑	☐
9. Will the proposed action result in an adverse change to natural resources (e.g., wetlands, waterbodies, groundwater, air quality, flora and fauna)?	☑	☐
10. Will the proposed action result in an increase in the potential for erosion, flooding or drainage problems?	☑	☐
11. Will the proposed action create a hazard to environmental resources or human health?	☑	☐

PRINT FORM

Agency Use Only [If applicable]

Project:

Date:

Short Environmental Assessment Form
Part 3 Determination of Significance

For every question in Part 2 that was answered "moderate to large impact may occur", or if there is a need to explain why a particular element of the proposed action may or will not result in a significant adverse environmental impact, please complete Part 3. Part 3 should, in sufficient detail, identify the impact, including any measures or design elements that have been included by the project sponsor to avoid or reduce impacts. Part 3 should also explain how the lead agency determined that the impact may or will not be significant. Each potential impact should be assessed considering its setting, probability of occurring, duration, irreversibility, geographic scope and magnitude. Also consider the potential for short-term, long-term and cumulative impacts.

☐ Check this box if you have determined, based on the information and analysis above, and any supporting documentation, that the proposed action may result in one or more potentially large or significant adverse impacts and an environmental impact statement is required.

☑ Check this box if you have determined, based on the information and analysis above, and any supporting documentation, that the proposed action will not result in any significant adverse environmental impacts.

Montgomery County Board
Name of Lead Agency

2-21-17
Date

Eric Mead
Print or Type Name of Responsible Officer in Lead Agency

Commissioner
Title of Responsible Officer

Signature of Responsible Officer in Lead Agency

Signature of Preparer (if different from Responsible Officer)

PRINT FORM

Montgomery County
Culvert Replacement Project

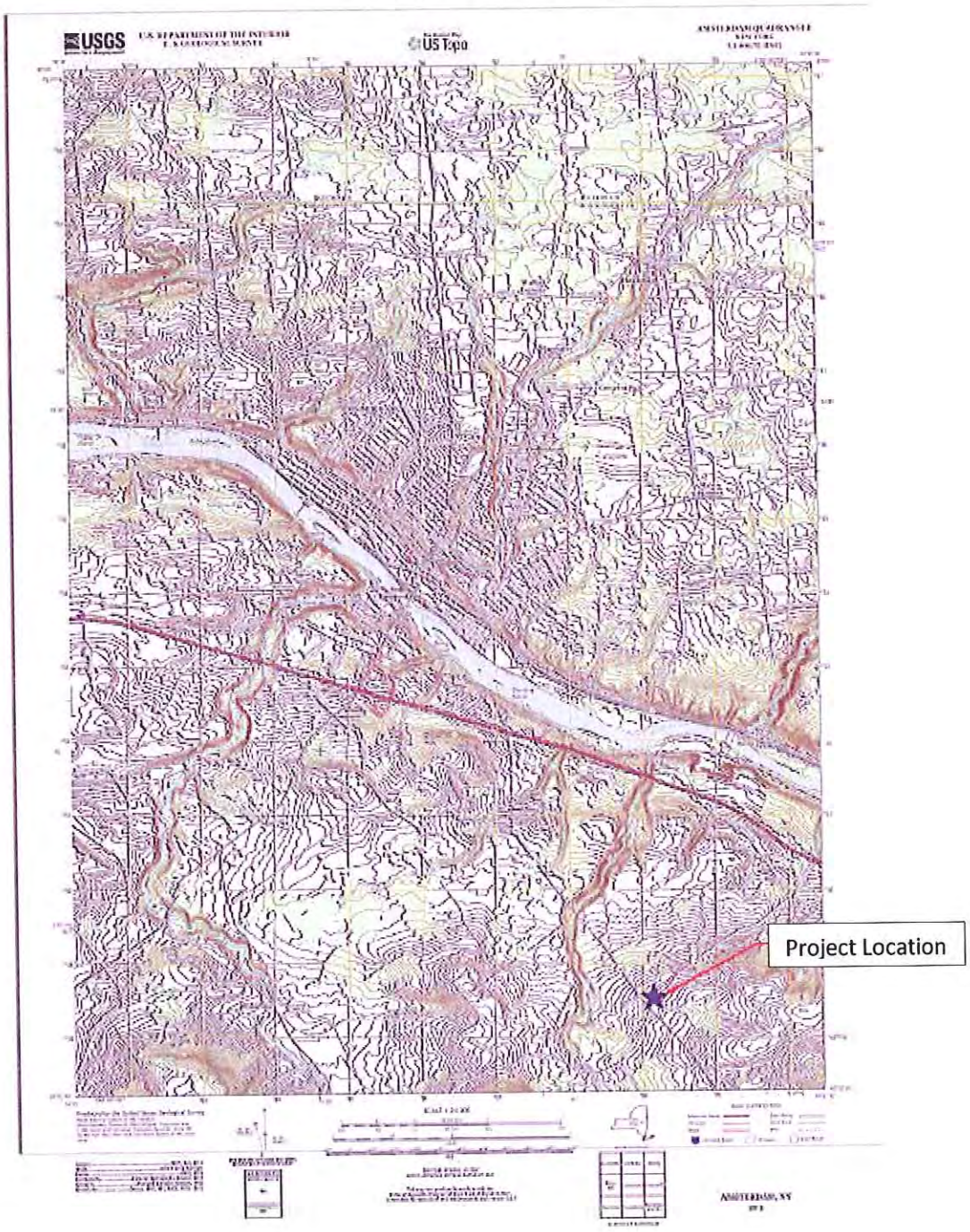

Site Location

Town of Florida, Bullshead Road Culvert Replacement

USGS, Amsterdam Quadrangle

Lat: N42°53'10" Long: W74°09'12"

PERMIT PACKAGE

TOWN OF FLORIDA
FORT HUNTER ROAD CULVERT REPLACEMENT

- PERMISSION TO INSPECT PROPERTY – 1 PAGE
- JOINT APPLICATION FORM – 4 PAGES
- SHORT ENVIRONMENTAL ASSESSMENT FORM PART 1 – 3 PAGES
- SHORT ENVIRONMENTAL ASSESSMENT FORM PART 2 – 2 PAGES
- SITE LOCATION, USGS QUADRANGLE – 1 PAGE

NEW YORK STATE OF OPPORTUNITY. | Department of Environmental Conservation

PERMISSION TO INSPECT PROPERTY

By signing this permission form for submission with an application for a permit(s) to the Department of Environmental Conservation ("DEC"), the signer consents to inspection by DEC staff of the project site or facility for which a permit is sought and, to the extent necessary, areas adjacent to the project site or facility. This consent allows DEC staff to enter upon and pass through such property in order to inspect the project site or facility, without prior notice, between the hours of 7:00 a.m. and 7:00 p.m., Monday through Friday. If DEC staff should wish to conduct an inspection at any other times, DEC staff will so notify the applicant and will obtain a separate consent for such an inspection.

Inspections may take place as part of the application review prior to a decision to grant or deny the permit(s) sought. By signing this consent form, the signer agrees that this consent remains in effect as long as the application is pending, and is effective regardless of whether the signer, applicant or an agent is present at the time of the inspection. In the event that the project site or facility is posted with any form of "posted" or "keep out" notices, or fenced in with an unlocked gate, this permission authorizes DEC staff to disregard such notices or unlocked gates at the time of inspection.

The signer further agrees that during an inspection, DEC staff may, among other things, take measurements, may analyze physical characteristics of the site including, but not limited to, soils and vegetation (taking samples for analysis), and may make drawings and take photographs.

Failure to grant consent for an inspection is grounds for, and may result in, denial of the permit(s) sought by the application.

Permission is granted for inspection of property located at the following address(es):

Fort Hunter Road approximately 1200 feet west of the
intersection of Fort Hunter Road and Mill Point Road.

*By signing this form, I affirm under penalty of perjury that I am authorized to give consent to entry by DEC staff as described above. I understand that false statements made herein are punishable as a Class A misdemeanor pursuant to Section 210.45 of the Penal Law.**

Eric Mead, Commissioner		2-21-17
Print Name and Title	Signature	Date

*The signer of this form must be an individual or authorized representative of a legal entity that:

- owns fee title and is in possession of the property identified above;
- maintains possessory interest in the property through a lease, rental agreement or other legally binding agreement; or
- is provided permission to act on behalf of an individual or legal entity possessing fee title or other possessory interest in the property for the purpose of consenting to inspection of such property.

NEW YORK STATE | Department of Environmental Conservation | Office of General Services | Department of State

US Army Corps of Engineers

JOINT APPLICATION FORM

For Permits for activities activities affecting streams, waterways, waterbodies, wetlands, coastal areas, sources of water, and endangered and threatened species.

You must separately apply for and obtain Permits from each involved agency before starting work. Please read all instructions.

1. **Applications To:**

>NYS Department of Environmental Conservation ☑ Check here to confirm you sent this form to NYSDEC.

Check all permits that apply:

- ☑ Stream Disturbance
- ☐ Excavation and Fill in Navigable Waters
- ☐ Docks, Moorings or Platforms
- ☐ Dams and Impoundment Structures
- ☐ 401 Water Quality Certification
- ☐ Freshwater Wetlands
- ☐ Tidal Wetlands
- ☐ Wild, Scenic and Recreational Rivers
- ☐ Coastal Erosion Management
- ☐ Water Withdrawal
- ☐ Long Island Well
- ☐ Incidental Take of Endangered / Threatened Species

>US Army Corps of Engineers ☑ Check here to confirm you sent this form to USACE.

Check all permits that apply: ☐ Section 404 Clean Water Act ☐ Section 10 Rivers and Harbors Act

Is the project Federally funded? ☐ Yes ☑ No

If yes, name of Federal Agency:

General Permit Type(s), if known:

Preconstruction Notification: ☐ Yes ☑ No

>NYS Office of General Services ☐ Check here to confirm you sent this form to NYSOGS.

Check all permits that apply:

☐ State Owned Lands Under Water

☐ Utility Easement (pipelines, conduits, cables, etc.) ☐ Docks, Moorings or Platforms

>NYS Department of State ☐ Check here to confirm you sent this form to NYSDOS.

Check if this applies: ☐ Coastal Consistency Concurrence

2. **Name of Applicant**: Montgomery County

Taxpayer ID (if applicant is NOT an individual): 14-6002568

Mailing Address: 6 Park Street

Post Office / City: Fonda | State: NY | Zip: 12068

Telephone: (518) 853-3814 Email: emead@co.montgomery.ny.us

Applicant Must be (check all that apply): ☑ Owner ☑ Operator ☐ Lessee

3. **Name of Property Owner (if different than Applicant)**

Mailing Address

Post Office / City | State | Zip

Telephone Email

For Agency Use Only	Agency Application Number:

4. Name of Contact / Agent

A. Thomas Bates, PE

Mailing Address	Post Office / City	State	Zip
7 South Church Street	Schenectady	NY	12305

Telephone (518) 382-1774 Email tbates@primeeng.com

5. Project / Facility Name

Fort Hunter Road Culvert Replacement

Property Tax Map Section / Block / Lot Number: N/A

Project Street Address, if applicable	Post Office / City	State	Zip
Fort Hunter Road	Amsterdam	NY	12010

Provide directions and distances to roads, intersections, bridges and bodies of water

Located in the Town of Florida approximately 1200 feet west of the intersection of Fort Hunter Road and Mill Point Road

☑ Town ☐ Village ☐ City

County	Stream/Waterbody Name
Florida	Montgomery	tributary to South Chuctanunda Creek

Project Location Coordinates: Enter Latitude and Longitude in degrees, minutes, seconds:

Latitude: N42 ° 53 ' 51 " Longitude: W74 ° 14 ' 20 "

6. Project Description: Provide the following information about your project. Continue each response and provide any additional information on other pages. **Attach plans on separate pages.**

a. Purpose of the proposed project:

This project involves the replacement of an existing culvert under Fort Hunter Road that allows a tributary to the South Chuctanunda Creek to flow beneath the roadway. All work will be completed as per the plans submitted with the application entitled "Montgomery County, Montgomery County Culvert Replacement, Contract No. 1 - Town of Amsterdam, Contract No. 2 - Town of Florida" by John M. McDonald Engineering.

b. Description of current site conditions:

c. Proposed site changes:

d. Type of structures and fill materials to be installed, and quantity of materials to be used (e.g., square feet of coverage, cubic yards of fill material, structures below ordinary/mean high water, etc.):

e. Area of excavation or dredging, volume of material to be removed, location of dredged material placement:

f. Is tree cutting or clearing proposed? ☐ Yes If Yes, explain below. ☑ No

Timing of the proposed cutting or clearing (month/year):

Number of trees to be cut: Acreage of trees to be cleared:

g. Work methods and type of equipment to be used:

h. Describe the planned sequence of activities:

i. Pollution control methods and other actions proposed to mitigate environmental impacts:

j. Erosion and silt control methods that will be used to prevent water quality impacts:

Silt fence

k. Alternatives considered to avoid regulated areas. If no feasible alternatives exist, explain how the project will minimize impacts:

l. Proposed use: ☐ Private ☑ Public ☐ Commercial

m. Proposed Start Date: October 2016 Estimated Completion Date: November 2016

n. Has work begun on project? ☐ Yes If Yes, explain below. ☑ No

o. Will project occupy Federal, State, or Municipal Land? ☑ Yes If Yes, explain below. ☐ No

The Town of Florida owns the Fort Hunter Road Road right-of-way

p. List any previous DEC, USACE, OGS or DOS Permit / Application numbers for activities at this location:

N/A

q. Will this project require additional Federal, State, or Local authorizations, including zoning changes?

☑ Yes If Yes, list below. ☐ No

NYS DEC & USACE Joint Application for Permit

7. **Signatures.**

Applicant and Owner (If different) must sign the application.
Append additional pages of this Signature section if there are multiple Applicants, Owners or Contact/Agents.

I hereby affirm that information provided on this form and all attachments submitted herewith is true to the best of my knowledge and belief.

Permission to Inspect - I hereby consent to Agency inspection of the project site and adjacent property areas. Agency staff may enter the property without notice between 7:00 am and 7:00 pm, Monday - Friday. Inspection may occur without the owner, applicant or agent present. If the property is posted with "keep out" signs or fenced with an unlocked gate, Agency staff may still enter the property. Agency staff may take measurements, analyze site physical characteristics, take soil and vegetation samples, sketch and photograph the site. I understand that failure to give this consent may result in denial of the permit(s) sought by this application.

False statements made herein are punishable as a Class A misdemeanor pursuant to Section 210.45 of the NYS Penal Law. Further, the applicant accepts full responsibility for all damage, direct or indirect, of whatever nature, and by whomever suffered, arising out of the project described herein and agrees to indemnify and save harmless the State from suits, actions, damages and costs of every name and description resulting from said project. In addition, Federal Law, 18 U.S.C., Section 1001 provides for a fine of not more than $10,000 or imprisonment for not more than 5 years, or both where an applicant knowingly and willingly falsifies, conceals, or covers up a material fact; or knowingly makes or uses a false, fictitious or fraudulent statement.

Signature of Applicant: [signature] Date: 2-21-17

Applicant Must be (check all that apply): ☑ Owner ☑ Operator ☐ Lessee

Printed Name: Eric Mead Title: Commissioner

Signature of Owner (if different than Applicant): [signature] ATB Date: 2/24/17

Printed Name: A. Thomas Bates Title: Project Engineer

Signature of Contact / Agent: [signature] Date: 2/24/17

Printed Name: A. Thomas Bates, PE Title: Project Engineer

For Agency Use Only **DETERMINATION OF NO PERMIT REQUIRED**

Agency Application Number _____

_____ (Agency Name) has determined that No Permit is required from this Agency for the project described in this application.

Agency Representative:

Printed Name _____ Title _____

Signature _____ Date _____

Short Environmental Assessment Form
Part 1 - Project Information

Instructions for Completing

Part 1 - Project Information. The applicant or project sponsor is responsible for the completion of Part 1. Responses become part of the application for approval or funding, are subject to public review, and may be subject to further verification. Complete Part 1 based on information currently available. If additional research or investigation would be needed to fully respond to any item, please answer as thoroughly as possible based on current information.

Complete all items in Part 1. You may also provide any additional information which you believe will be needed by or useful to the lead agency; attach additional pages as necessary to supplement any item.

Part 1 - Project and Sponsor Information

Name of Action or Project:
Fort Hunter Road Culvert Replacement

Project Location (describe, and attach a location map):
Fort Hunter Road, Montgomery County, Florida, NY

Brief Description of Proposed Action:
Replacement of an existing box culvert within the Fort Hunter Road right-of-way that allows water for a tributary to South Chuctanunda Creek to flow beneath the roadway. The existing box culvert is deteriorated and undersized.

Project will replace the existing 36"x63" box culvert with an 84" HDPE culvert.

Name of Applicant or Sponsor:	Telephone: (518) 853-3814
Montgomery County	E-Mail: emead@co.montgomery.ny.us

Address:
6 Park Street

City/PO:	State:	Zip Code:
Fonda	NY	12068

	NO	YES
1. Does the proposed action only involve the legislative adoption of a plan, local law, ordinance, administrative rule, or regulation? If Yes, attach a narrative description of the intent of the proposed action and the environmental resources that may be affected in the municipality and proceed to Part 2. If no, continue to question 2.	☑	☐
2. Does the proposed action require a permit, approval or funding from any other governmental Agency? If Yes, list agency(s) name and permit or approval: NYS DEC & USACE Joint Application for Permit	☐	☑

3.a. Total acreage of the site of the proposed action? <1 acres
b. Total acreage to be physically disturbed? <1 acres
c. Total acreage (project site and any contiguous properties) owned or controlled by the applicant or project sponsor? <1 acres

4. Check all land uses that occur on, adjoining and near the proposed action.
☐ Urban ☑ Rural (non-agriculture) ☐ Industrial ☐ Commercial ☑ Residential (suburban)
☑ Forest ☑ Agriculture ☐ Aquatic ☐ Other (specify): _____
☐ Parkland

	NO	YES	N/A
5. Is the proposed action,			
a. A permitted use under the zoning regulations?	☐	☑	☐
b. Consistent with the adopted comprehensive plan?	☐	☑	☐

	NO	YES
6. Is the proposed action consistent with the predominant character of the existing built or natural landscape?	☐	☑
7. Is the site of the proposed action located in, or does it adjoin, a state listed Critical Environmental Area? If Yes, identify: _____	☑	☐
8. a. Will the proposed action result in a substantial increase in traffic above present levels?	☑	☐
b. Are public transportation service(s) available at or near the site of the proposed action?	☑	☐
c. Are any pedestrian accommodations or bicycle routes available on or near site of the proposed action?	☑	☐
9. Does the proposed action meet or exceed the state energy code requirements? If the proposed action will exceed requirements, describe design features and technologies: _____	☑	☐
10. Will the proposed action connect to an existing public/private water supply? If No, describe method for providing potable water: _____	☑	☐
11. Will the proposed action connect to existing wastewater utilities? If No, describe method for providing wastewater treatment: _____	☑	☐
12. a. Does the site contain a structure that is listed on either the State or National Register of Historic Places?	☑	☐
b. Is the proposed action located in an archeological sensitive area?	☑	☐
13. a. Does any portion of the site of the proposed action, or lands adjoining the proposed action, contain wetlands or other waterbodies regulated by a federal, state or local agency?	☐	☑
b. Would the proposed action physically alter, or encroach into, any existing wetland or waterbody? If Yes, identify the wetland or waterbody and extent of alterations in square feet or acres: _____	☑	☐
14. Identify the typical habitat types that occur on, or are likely to be found on the project site. Check all that apply: ☐ Shoreline ☑ Forest ☑ Agricultural/grasslands ☐ Early mid-successional ☐ Wetland ☐ Urban ☑ Suburban		
15. Does the site of the proposed action contain any species of animal, or associated habitats, listed by the State or Federal government as threatened or endangered?	☑	☐
16. Is the project site located in the 100 year flood plain?	☑	☐
17. Will the proposed action create storm water discharge, either from point or non-point sources? If Yes, a. Will storm water discharges flow to adjacent properties? ☐ NO ☐ YES	☑	☐
b. Will storm water discharges be directed to established conveyance systems (runoff and storm drains)? If Yes, briefly describe: ☐ NO ☐ YES _____		

	NO	YES
18. Does the proposed action include construction or other activities that result in the impoundment of water or other liquids (e.g. retention pond, waste lagoon, dam)? If Yes, explain purpose and size:	✓	
19. Has the site of the proposed action or an adjoining property been the location of an active or closed solid waste management facility? If Yes, describe:	✓	
20. Has the site of the proposed action or an adjoining property been the subject of remediation (ongoing or completed) for hazardous waste? If Yes, describe:	✓	

I AFFIRM THAT THE INFORMATION PROVIDED ABOVE IS TRUE AND ACCURATE TO THE BEST OF MY KNOWLEDGE

Applicant/sponsor name: Montgomery County Date: 2-21-17

Signature:

PRINT FORM

Agency Use Only [If applicable]	
Project:	
Date:	

Short Environmental Assessment Form
Part 2 - Impact Assessment

Part 2 is to be completed by the Lead Agency.
Answer all of the following questions in Part 2 using the information contained in Part 1 and other materials submitted by the project sponsor or otherwise available to the reviewer. When answering the questions the reviewer should be guided by the concept "Have my responses been reasonable considering the scale and context of the proposed action?"

	No, or small impact may occur	Moderate to large impact may occur
1. Will the proposed action create a material conflict with an adopted land use plan or zoning regulations?	☑	☐
2. Will the proposed action result in a change in the use or intensity of use of land?	☑	☐
3. Will the proposed action impair the character or quality of the existing community?	☑	☐
4. Will the proposed action have an impact on the environmental characteristics that caused the establishment of a Critical Environmental Area (CEA)?	☑	☐
5. Will the proposed action result in an adverse change in the existing level of traffic or affect existing infrastructure for mass transit, biking or walkway?	☑	☐
6. Will the proposed action cause an increase in the use of energy and it fails to incorporate reasonably available energy conservation or renewable energy opportunities?	☑	☐
7. Will the proposed action impact existing: a. public / private water supplies?	☑	☐
b. public / private wastewater treatment utilities?	☑	☐
8. Will the proposed action impair the character or quality of important historic, archaeological, architectural or aesthetic resources?	☑	☐
9. Will the proposed action result in an adverse change to natural resources (e.g., wetlands, waterbodies, groundwater, air quality, flora and fauna)?	☑	☐
10. Will the proposed action result in an increase in the potential for erosion, flooding or drainage problems?	☑	☐
11. Will the proposed action create a hazard to environmental resources or human health?	☑	☐

PRINT FORM

Agency Use Only [If applicable]

Project:

Date:

Short Environmental Assessment Form
Part 3 Determination of Significance

For every question in Part 2 that was answered "moderate to large impact may occur", or if there is a need to explain why a particular element of the proposed action may or will not result in a significant adverse environmental impact, please complete Part 3. Part 3 should, in sufficient detail, identify the impact, including any measures or design elements that have been included by the project sponsor to avoid or reduce impacts. Part 3 should also explain how the lead agency determined that the impact may or will not be significant. Each potential impact should be assessed considering its setting, probability of occurring, duration, irreversibility, geographic scope and magnitude. Also consider the potential for short-term, long-term and cumulative impacts.

☐ Check this box if you have determined, based on the information and analysis above, and any supporting documentation, that the proposed action may result in one or more potentially large or significant adverse impacts and an environmental impact statement is required.

☑ Check this box if you have determined, based on the information and analysis above, and any supporting documentation, that the proposed action will not result in any significant adverse environmental impacts.

Montgomery County Board	2-21-17
Name of Lead Agency	Date
Eric Mead	Commissioner
Print or Type Name of Responsible Officer in Lead Agency	Title of Responsible Officer
Signature of Responsible Officer in Lead Agency	Signature of Preparer (if different from Responsible Officer)

PRINT FORM

Montgomery County
Culvert Replacement Project

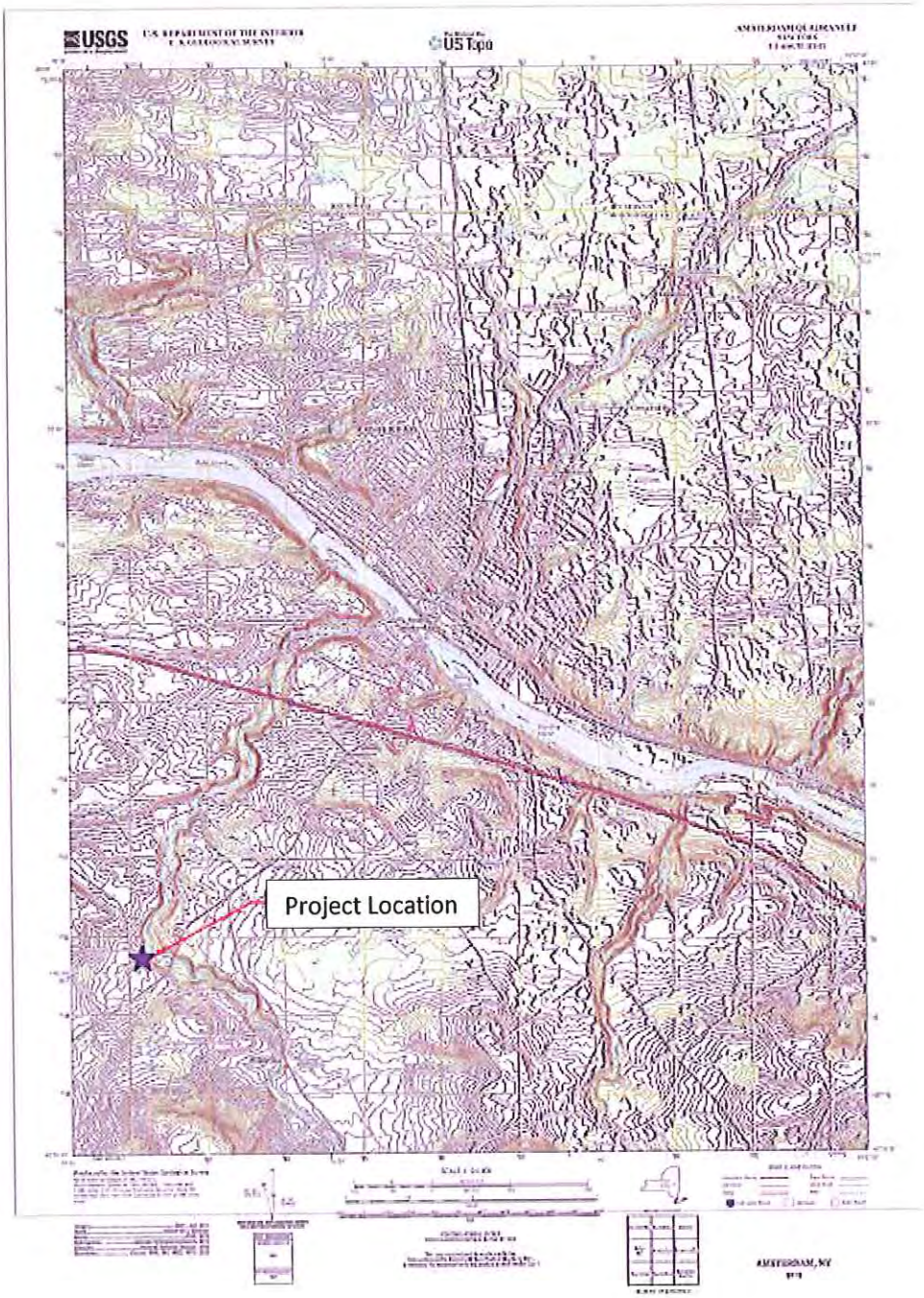

Site Location

Town of Florida, Fort Hunter Road Culvert Replacement

USGS, Amsterdam Quadrangle

Lat: N42°53'51" Long: W74°14'20"

PERMIT PACKAGE

TOWN OF FLORIDA
HARTLEY ROAD CULVERT REPLACEMENT

- PERMISSION TO INSPECT PROPERTY – 1 PAGE
- JOINT APPLICATION FORM – 4 PAGES
- SHORT ENVIRONMENTAL ASSESSMENT FORM PART 1 – 3 PAGES
- SHORT ENVIRONMENTAL ASSESSMENT FORM PART 2 – 2 PAGES
- SITE LOCATION, USGS QUADRANGLE – 1 PAGE

NEW YORK STATE OF OPPORTUNITY. | Department of Environmental Conservation

PERMISSION TO INSPECT PROPERTY

By signing this permission form for submission with an application for a permit(s) to the Department of Environmental Conservation ("DEC"), the signer consents to inspection by DEC staff of the project site or facility for which a permit is sought and, to the extent necessary, areas adjacent to the project site or facility. This consent allows DEC staff to enter upon and pass through such property in order to inspect the project site or facility, without prior notice, between the hours of 7:00 a.m. and 7:00 p.m., Monday through Friday. If DEC staff should wish to conduct an inspection at any other times, DEC staff will so notify the applicant and will obtain a separate consent for such an inspection.

Inspections may take place as part of the application review prior to a decision to grant or deny the permit(s) sought. By signing this consent form, the signer agrees that this consent remains in effect as long as the application is pending, and is effective regardless of whether the signer, applicant or an agent is present at the time of the inspection. In the event that the project site or facility is posted with any form of "posted" or "keep out" notices, or fenced in with an unlocked gate, this permission authorizes DEC staff to disregard such notices or unlocked gates at the time of inspection.

The signer further agrees that during an inspection, DEC staff may, among other things, take measurements, may analyze physical characteristics of the site including, but not limited to, soils and vegetation (taking samples for analysis), and may make drawings and take photographs.

Failure to grant consent for an inspection is grounds for, and may result in, denial of the permit(s) sought by the application.

Permission is granted for inspection of property located at the following address(es):

Hartley Road approximately 900 feet south of the
intersection of Hartley Road and Snooks Corners Road.

*By signing this form, I affirm under penalty of perjury that I am authorized to give consent to entry by DEC staff as described above. I understand that false statements made herein are punishable as a Class A misdemeanor pursuant to Section 210.45 of the Penal Law.**

Eric Mead, Commissioner		2-21-17
Print Name and Title	Signature	Date

*The signer of this form must be an individual or authorized representative of a legal entity that:

- owns fee title and is in possession of the property identified above;
- maintains possessory interest in the property through a lease, rental agreement or other legally binding agreement; or
- is provided permission to act on behalf of an individual or legal entity possessing fee title or other possessory interest in the property for the purpose of consenting to inspection of such property.

NEW YORK STATE | Department of Environmental Conservation | Office of General Services | Department of State

US Army Corps of Engineers

JOINT APPLICATION FORM

For Permits for activities activities affecting streams, waterways, waterbodies, wetlands, coastal areas, sources of water, and endangered and threatened species.

You must separately apply for and obtain Permits from each involved agency before starting work. Please read all instructions.

1. **Applications To:**

>NYS Department of Environmental Conservation ☑ Check here to confirm you sent this form to NYSDEC.

Check all permits that apply:

- ☑ Stream Disturbance
- ☐ Excavation and Fill in Navigable Waters
- ☐ Docks, Moorings or Platforms
- ☐ Dams and Impoundment Structures
- ☐ 401 Water Quality Certification
- ☐ Freshwater Wetlands
- ☐ Tidal Wetlands
- ☐ Wild, Scenic and Recreational Rivers
- ☐ Coastal Erosion Management
- ☐ Water Withdrawal
- ☐ Long Island Well
- ☐ Incidental Take of Endangered / Threatened Species

>US Army Corps of Engineers ☑ Check here to confirm you sent this form to USACE.

Check all permits that apply: ☐ Section 404 Clean Water Act ☐ Section 10 Rivers and Harbors Act

Is the project Federally funded? ☐ Yes ☑ No

If yes, name of Federal Agency:

General Permit Type(s), if known:

Preconstruction Notification: ☐ Yes ☑ No

>NYS Office of General Services ☐ Check here to confirm you sent this form to NYSOGS.

Check all permits that apply:

- ☐ State Owned Lands Under Water
- ☐ Utility Easement (pipelines, conduits, cables, etc.)
- ☐ Docks, Moorings or Platforms

>NYS Department of State ☐ Check here to confirm you sent this form to NYSDOS.

Check if this applies: ☐ Coastal Consistency Concurrence

2. **Name of Applicant**: Montgomery County

Taxpayer ID (if applicant is NOT an individual): 14-6002568

Mailing Address: 6 Park Street

Post Office / City: Fonda

State: NY

Zip: 12068

Telephone: (518) 853-3814

Email: emead@co.montgomery.ny.us

Applicant Must be (check all that apply): ☑ Owner ☑ Operator ☐ Lessee

3. **Name of Property Owner (if different than Applicant)**

Mailing Address

Post Office / City

State

Zip

Telephone

Email

For Agency Use Only	Agency Application Number:

4. Name of Contact / Agent

A. Thomas Bates, PE

Mailing Address	Post Office / City	State	Zip
7 South Church Street	Schenectady	NY	12305

Telephone (518) 382-1774 Email tbates@primeeng.com

5. Project / Facility Name

Hartley Road Culvert Replacement

Property Tax Map Section / Block / Lot Number: N/A

Project Street Address, if applicable	Post Office / City	State	Zip
Hartley Road	Amsterdam	NY	12010

Provide directions and distances to roads, intersections, bridges and bodies of water

Located in the Town of Florida approximately 900 feet south of the intersection of Hartley Road and Snooks Corners Road.

☑ Town ☐ Village ☐ City

County	Stream/Waterbody Name
Florida	Montgomery	tributary to South Chuctanunda Creek

Project Location Coordinates: Enter Latitude and Longitude in degrees, minutes, seconds:

Latitude: N42 ° 54 ' 46 " Longitude: W74 ° 14 ' 41 "

6. Project Description: Provide the following information about your project. Continue each response and provide any additional information on other pages. **Attach plans on separate pages.**

a. Purpose of the proposed project:

This project involves the replacement of an existing culvert under Hartley Road that allows a tributary to South Chuctanunda Creek to flow beneath the roadway. All work will be completed as per the plans submitted with the application entitled "Montgomery County, Montgomery County Culvert Replacement, Contract No. 1 - Town of Amsterdam, Contract No. 2 - Town of Florida" by John M. McDonald Engineering.

b. Description of current site conditions:

c. Proposed site changes:

d. Type of structures and fill materials to be installed, and quantity of materials to be used (e.g., square feet of coverage, cubic yards of fill material, structures below ordinary/mean high water, etc.):

e. Area of excavation or dredging, volume of material to be removed, location of dredged material placement:

f. Is tree cutting or clearing proposed? ☐ Yes If Yes, explain below. ☑ No

Timing of the proposed cutting or clearing (month/year):

Number of trees to be cut: Acreage of trees to be cleared:

g. Work methods and type of equipment to be used:

h. Describe the planned sequence of activities:

i. Pollution control methods and other actions proposed to mitigate environmental impacts:

j. Erosion and silt control methods that will be used to prevent water quality impacts:

Silt fence

k. Alternatives considered to avoid regulated areas. If no feasible alternatives exist, explain how the project will minimize impacts:

l. Proposed use: ☐ Private ☑ Public ☐ Commercial

m. Proposed Start Date: October 2016 Estimated Completion Date: November 2016

n. Has work begun on project? ☐ Yes If Yes, explain below. ☑ No

o. Will project occupy Federal, State, or Municipal Land? ☑ Yes If Yes, explain below. ☐ No

The Town of Florida owns the Hartley Road right-of-way

p. List any previous DEC, USACE, OGS or DOS Permit / Application numbers for activities at this location:

N/A

q. Will this project require additional Federal, State, or Local authorizations, including zoning changes?

☑ Yes If Yes, list below. ☐ No

NYS DEC & USACE Joint Application for Permit

7. **Signatures.**
Applicant and Owner (If different) must sign the application.
Append additional pages of this Signature section if there are multiple Applicants, Owners or Contact/Agents.

I hereby affirm that information provided on this form and all attachments submitted herewith is true to the best of my knowledge and belief.

Permission to Inspect - I hereby consent to Agency inspection of the project site and adjacent property areas. Agency staff may enter the property without notice between 7:00 am and 7:00 pm, Monday - Friday. Inspection may occur without the owner, applicant or agent present. If the property is posted with "keep out" signs or fenced with an unlocked gate, Agency staff may still enter the property. Agency staff may take measurements, analyze site physical characteristics, take soil and vegetation samples, sketch and photograph the site. I understand that failure to give this consent may result in denial of the permit(s) sought by this application.

False statements made herein are punishable as a Class A misdemeanor pursuant to Section 210.45 of the NYS Penal Law. Further, the applicant accepts full responsibility for all damage, direct or indirect, of whatever nature, and by whomever suffered, arising out of the project described herein and agrees to indemnify and save harmless the State from suits, actions, damages and costs of every name and description resulting from said project. In addition, Federal Law, 18 U.S.C., Section 1001 provides for a fine of not more than $10,000 or imprisonment for not more than 5 years, or both where an applicant knowingly and willingly falsifies, conceals, or covers up a material fact; or knowingly makes or uses a false, fictitious or fraudulent statement.

Signature of Applicant | Date: 2-21-17

Applicant Must be (check all that apply): ☑ Owner ☑ Operator ☐ Lessee

Printed Name: Eric Mead | Title: Commissioner

Signature of Owner (if different than Applicant) | Date:

Printed Name: ~~A. Thomas Bates~~ ATB | Title:

Signature of Contact / Agent | Date: 2/24/17

Printed Name: A. Thomas Bates, PE | Title: Project Engineer

For Agency Use Only **DETERMINATION OF NO PERMIT REQUIRED**

Agency Application Number

(Agency Name) has determined that No Permit is required from this Agency for the project described in this application.

Agency Representative:

Printed Name | Title

Signature | Date

Short Environmental Assessment Form
Part 1 - Project Information

Instructions for Completing

Part 1 - Project Information. The applicant or project sponsor is responsible for the completion of Part 1. Responses become part of the application for approval or funding, are subject to public review, and may be subject to further verification. Complete Part 1 based on information currently available. If additional research or investigation would be needed to fully respond to any item, please answer as thoroughly as possible based on current information.

Complete all items in Part 1. You may also provide any additional information which you believe will be needed by or useful to the lead agency; attach additional pages as necessary to supplement any item.

Part 1 - Project and Sponsor Information

Name of Action or Project:
Hartley Road Culvert Replacement

Project Location (describe, and attach a location map):
Hartley Road, Montgomery County, Florida, NY

Brief Description of Proposed Action:
Replacement of an existing undersized culvert within the Hartley Road right-of-way that allows water for a tributary to the South Chuctanunda Creek to flow beneath the roadway. The existing pipe is undersized.

Project will replace the existing 48" CMP culvert with an 84" HDPE Culvert.

Name of Applicant or Sponsor:	Telephone: (518) 853-3814
Montgomery County	E-Mail: emead@co.montgomery.ny.us

Address:
6 Park Street

City/PO:	State:	Zip Code:
Fonda	NY	12068

	NO	YES
1. Does the proposed action only involve the legislative adoption of a plan, local law, ordinance, administrative rule, or regulation? If Yes, attach a narrative description of the intent of the proposed action and the environmental resources that may be affected in the municipality and proceed to Part 2. If no, continue to question 2.	☑	☐
2. Does the proposed action require a permit, approval or funding from any other governmental Agency? If Yes, list agency(s) name and permit or approval: NYS DEC & USACE Joint Application for Permit	☐	☑

3.a. Total acreage of the site of the proposed action? <1 acres
b. Total acreage to be physically disturbed? <1 acres
c. Total acreage (project site and any contiguous properties) owned or controlled by the applicant or project sponsor? <1 acres

4. Check all land uses that occur on, adjoining and near the proposed action.
☐ Urban ☑ Rural (non-agriculture) ☐ Industrial ☐ Commercial ☑ Residential (suburban)
☑ Forest ☑ Agriculture ☐ Aquatic ☐ Other (specify): _____
☐ Parkland

	NO	YES	N/A
5. Is the proposed action,			
a. A permitted use under the zoning regulations?	☐	☑	☐
b. Consistent with the adopted comprehensive plan?	☐	☑	☐
6. Is the proposed action consistent with the predominant character of the existing built or natural landscape?	NO ☐	YES ☑	
7. Is the site of the proposed action located in, or does it adjoin, a state listed Critical Environmental Area? If Yes, identify: _____	NO ☑	YES ☐	
8. a. Will the proposed action result in a substantial increase in traffic above present levels?	NO ☑	YES ☐	
b. Are public transportation service(s) available at or near the site of the proposed action?	☑	☐	
c. Are any pedestrian accommodations or bicycle routes available on or near site of the proposed action?	☑	☐	
9. Does the proposed action meet or exceed the state energy code requirements? If the proposed action will exceed requirements, describe design features and technologies: _____	NO ☑	YES ☐	
10. Will the proposed action connect to an existing public/private water supply? If No, describe method for providing potable water: _____	NO ☑	YES ☐	
11. Will the proposed action connect to existing wastewater utilities? If No, describe method for providing wastewater treatment: _____	NO ☑	YES ☐	
12. a. Does the site contain a structure that is listed on either the State or National Register of Historic Places?	NO ☑	YES ☐	
b. Is the proposed action located in an archeological sensitive area?	☑	☐	
13. a. Does any portion of the site of the proposed action, or lands adjoining the proposed action, contain wetlands or other waterbodies regulated by a federal, state or local agency?	NO ☐	YES ☑	
b. Would the proposed action physically alter, or encroach into, any existing wetland or waterbody? If Yes, identify the wetland or waterbody and extent of alterations in square feet or acres: _____	☑	☐	
14. Identify the typical habitat types that occur on, or are likely to be found on the project site. Check all that apply: ☐ Shoreline ☑ Forest ☑ Agricultural/grasslands ☐ Early mid-successional ☐ Wetland ☐ Urban ☑ Suburban			
15. Does the site of the proposed action contain any species of animal, or associated habitats, listed by the State or Federal government as threatened or endangered?	NO ☑	YES ☐	
16. Is the project site located in the 100 year flood plain?	NO ☑	YES ☐	
17. Will the proposed action create storm water discharge, either from point or non-point sources? If Yes, a. Will storm water discharges flow to adjacent properties? ☐ NO ☐ YES	NO ☑	YES ☐	
b. Will storm water discharges be directed to established conveyance systems (runoff and storm drains)? If Yes, briefly describe: ☐ NO ☐ YES _____			

	NO	YES
18. Does the proposed action include construction or other activities that result in the impoundment of water or other liquids (e.g. retention pond, waste lagoon, dam)? If Yes, explain purpose and size:	✓	
19. Has the site of the proposed action or an adjoining property been the location of an active or closed solid waste management facility? If Yes, describe:	✓	
20. Has the site of the proposed action or an adjoining property been the subject of remediation (ongoing or completed) for hazardous waste? If Yes, describe:	✓	

I AFFIRM THAT THE INFORMATION PROVIDED ABOVE IS TRUE AND ACCURATE TO THE BEST OF MY KNOWLEDGE

Applicant/sponsor name: Montgomery County Date: 2-21-17

Signature:

PRINT FORM

Agency Use Only [If applicable]

Project:

Date:

Short Environmental Assessment Form
Part 2 - Impact Assessment

Part 2 is to be completed by the Lead Agency.
Answer all of the following questions in Part 2 using the information contained in Part 1 and other materials submitted by the project sponsor or otherwise available to the reviewer. When answering the questions the reviewer should be guided by the concept "Have my responses been reasonable considering the scale and context of the proposed action?"

	No, or small impact may occur	Moderate to large impact may occur
1. Will the proposed action create a material conflict with an adopted land use plan or zoning regulations?	☑	☐
2. Will the proposed action result in a change in the use or intensity of use of land?	☑	☐
3. Will the proposed action impair the character or quality of the existing community?	☑	☐
4. Will the proposed action have an impact on the environmental characteristics that caused the establishment of a Critical Environmental Area (CEA)?	☑	☐
5. Will the proposed action result in an adverse change in the existing level of traffic or affect existing infrastructure for mass transit, biking or walkway?	☑	☐
6. Will the proposed action cause an increase in the use of energy and it fails to incorporate reasonably available energy conservation or renewable energy opportunities?	☑	☐
7. Will the proposed action impact existing: a. public / private water supplies?	☑	☐
b. public / private wastewater treatment utilities?	☑	☐
8. Will the proposed action impair the character or quality of important historic, archaeological, architectural or aesthetic resources?	☑	☐
9. Will the proposed action result in an adverse change to natural resources (e.g., wetlands, waterbodies, groundwater, air quality, flora and fauna)?	☑	☐
10. Will the proposed action result in an increase in the potential for erosion, flooding or drainage problems?	☑	☐
11. Will the proposed action create a hazard to environmental resources or human health?	☑	☐

PRINT FORM

Agency Use Only [If applicable]

Project:

Date:

Short Environmental Assessment Form
Part 3 Determination of Significance

For every question in Part 2 that was answered "moderate to large impact may occur", or if there is a need to explain why a particular element of the proposed action may or will not result in a significant adverse environmental impact, please complete Part 3. Part 3 should, in sufficient detail, identify the impact, including any measures or design elements that have been included by the project sponsor to avoid or reduce impacts. Part 3 should also explain how the lead agency determined that the impact may or will not be significant. Each potential impact should be assessed considering its setting, probability of occurring, duration, irreversibility, geographic scope and magnitude. Also consider the potential for short-term, long-term and cumulative impacts.

☐ Check this box if you have determined, based on the information and analysis above, and any supporting documentation, that the proposed action may result in one or more potentially large or significant adverse impacts and an environmental impact statement is required.

☑ Check this box if you have determined, based on the information and analysis above, and any supporting documentation, that the proposed action will not result in any significant adverse environmental impacts.

Montgomery County Board	2-21-17
Name of Lead Agency	Date
Eric Mead	Commissioner
Print or Type Name of Responsible Officer in Lead Agency	Title of Responsible Officer
Signature of Responsible Officer in Lead Agency	Signature of Preparer (if different from Responsible Officer)

PRINT FORM

Montgomery County
Culvert Replacement Project

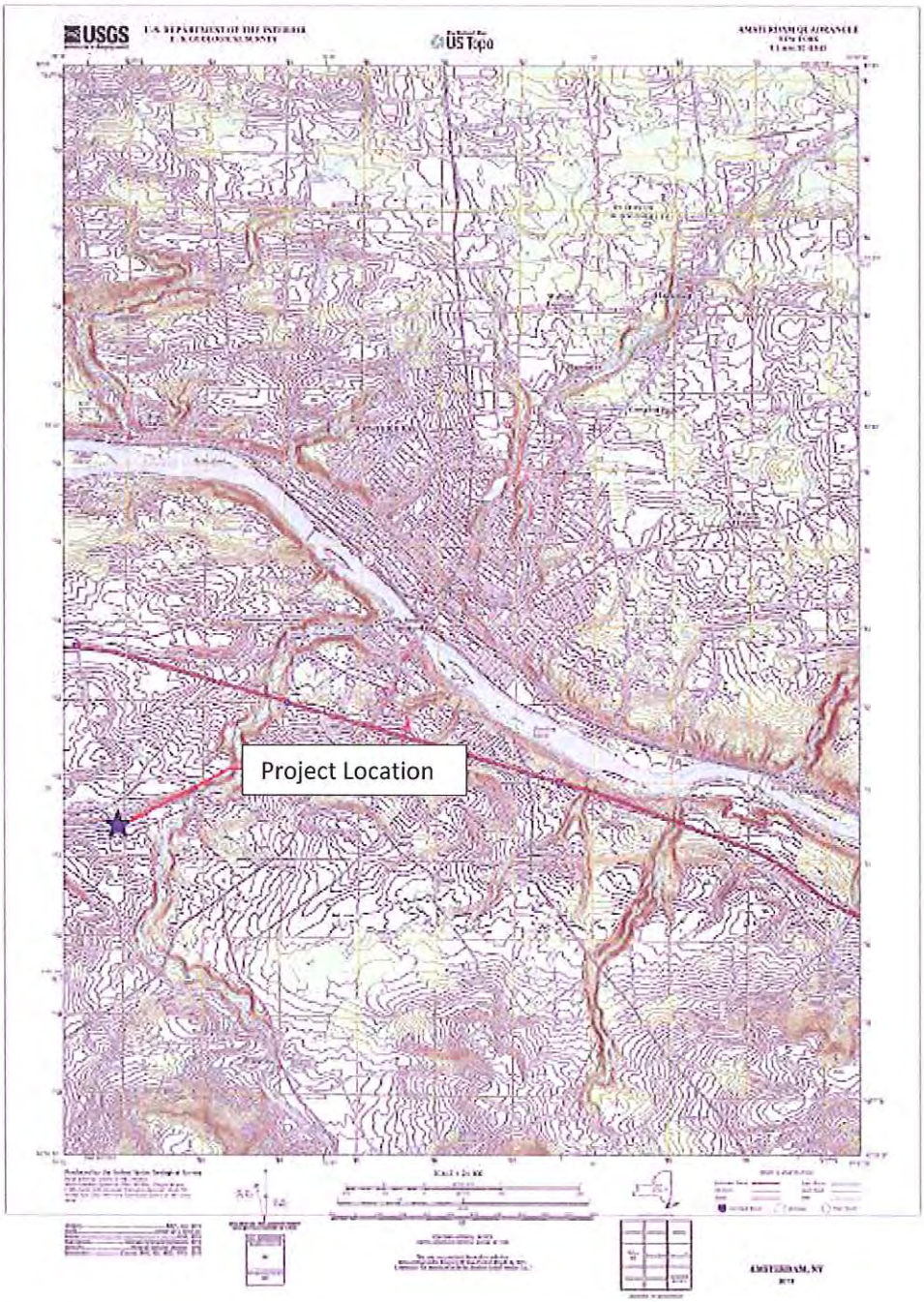

Site Location

Town of Florida, Hartley Road Culvert Replacement

USGS, Amsterdam Quadrangle

Lat: N42°54'46" Long: W74°14'41"

PERMIT PACKAGE

TOWN OF FLORIDA
LANGLEY ROAD CULVERT REPLACEMENT

- PERMISSION TO INSPECT PROPERTY – 1 PAGE
- JOINT APPLICATION FORM – 4 PAGES
- SHORT ENVIRONMENTAL ASSESSMENT FORM PART 1 – 3 PAGES
- SHORT ENVIRONMENTAL ASSESSMENT FORM PART 2 – 2 PAGES
- SITE LOCATION, USGS QUADRANGLE – 1 PAGE

NEW YORK STATE OF OPPORTUNITY. | Department of Environmental Conservation

PERMISSION TO INSPECT PROPERTY

By signing this permission form for submission with an application for a permit(s) to the Department of Environmental Conservation ("DEC"), the signer consents to inspection by DEC staff of the project site or facility for which a permit is sought and, to the extent necessary, areas adjacent to the project site or facility. This consent allows DEC staff to enter upon and pass through such property in order to inspect the project site or facility, without prior notice, between the hours of 7:00 a.m. and 7:00 p.m., Monday through Friday. If DEC staff should wish to conduct an inspection at any other times, DEC staff will so notify the applicant and will obtain a separate consent for such an inspection.

Inspections may take place as part of the application review prior to a decision to grant or deny the permit(s) sought. By signing this consent form, the signer agrees that this consent remains in effect as long as the application is pending, and is effective regardless of whether the signer, applicant or an agent is present at the time of the inspection. In the event that the project site or facility is posted with any form of "posted" or "keep out" notices, or fenced in with an unlocked gate, this permission authorizes DEC staff to disregard such notices or unlocked gates at the time of inspection.

The signer further agrees that during an inspection, DEC staff may, among other things, take measurements, may analyze physical characteristics of the site including, but not limited to, soils and vegetation (taking samples for analysis), and may make drawings and take photographs.

Failure to grant consent for an inspection is grounds for, and may result in, denial of the permit(s) sought by the application.

Permission is granted for inspection of property located at the following address(es):

Langley Road Culverts located at the intersection of
Langley Road and Covey Road

*By signing this form, I affirm under penalty of perjury that I am authorized to give consent to entry by DEC staff as described above. I understand that false statements made herein are punishable as a Class A misdemeanor pursuant to Section 210.45 of the Penal Law.**

Eric Mead, Commissioner		2-21-17
Print Name and Title	Signature	Date

*The signer of this form must be an individual or authorized representative of a legal entity that:

- owns fee title and is in possession of the property identified above;
- maintains possessory interest in the property through a lease, rental agreement or other legally binding agreement; or
- is provided permission to act on behalf of an individual or legal entity possessing fee title or other possessory interest in the property for the purpose of consenting to inspection of such property.

NEW YORK STATE | Department of Environmental Conservation | Office of General Services | Department of State

US Army Corps of Engineers

JOINT APPLICATION FORM

For Permits for activities activities affecting streams, waterways, waterbodies, wetlands, coastal areas, sources of water, and endangered and threatened species.

You must separately apply for and obtain Permits from each involved agency before starting work. Please read all instructions.

1. **Applications To:**

>NYS Department of Environmental Conservation ☑ Check here to confirm you sent this form to NYSDEC.

Check all permits that apply:

- ☑ Stream Disturbance
- ☐ Excavation and Fill in Navigable Waters
- ☐ Docks, Moorings or Platforms
- ☐ Dams and Impoundment Structures
- ☐ 401 Water Quality Certification
- ☐ Freshwater Wetlands
- ☐ Tidal Wetlands
- ☐ Wild, Scenic and Recreational Rivers
- ☐ Coastal Erosion Management
- ☐ Water Withdrawal
- ☐ Long Island Well
- ☐ Incidental Take of Endangered / Threatened Species

>US Army Corps of Engineers ☑ Check here to confirm you sent this form to USACE.

Check all permits that apply: ☐ Section 404 Clean Water Act ☐ Section 10 Rivers and Harbors Act

Is the project Federally funded? ☐ Yes ☑ No

If yes, name of Federal Agency:

General Permit Type(s), if known:

Preconstruction Notification: ☐ Yes ☑ No

>NYS Office of General Services ☐ Check here to confirm you sent this form to NYSOGS.

Check all permits that apply:

- ☐ State Owned Lands Under Water
- ☐ Utility Easement (pipelines, conduits, cables, etc.)
- ☐ Docks, Moorings or Platforms

>NYS Department of State ☐ Check here to confirm you sent this form to NYSDOS.

Check if this applies: ☐ Coastal Consistency Concurrence

2. **Name of Applicant**: Montgomery County

Taxpayer ID (if applicant is NOT an individual): 14-6002568

Mailing Address: 6 Park Street

Post Office / City: Fonda

State: NY

Zip: 12068

Telephone: (518) 853-3814

Email: emead@co.montgomery.ny.us

Applicant Must be (check all that apply): ☑ Owner ☑ Operator ☐ Lessee

3. **Name of Property Owner (if different than Applicant)**

Mailing Address

Post Office / City

State

Zip

Telephone

Email

For Agency Use Only | Agency Application Number:

4. Name of Contact / Agent

A. Thomas Bates, PE

Mailing Address: 7 South Church Street

Post Office / City: Schenectady

State: NY

Zip: 12305

Telephone: (518) 382-1774

Email: tbates@primeeng.com

5. Project / Facility Name

Langley Road Culvert Replacement

Property Tax Map Section / Block / Lot Number: N/A

Project Street Address, if applicable: Langley Road

Post Office / City: Amsterdam

State: NY

Zip: 12010

Provide directions and distances to roads, intersections, bridges and bodies of water

Located in the Town of Florida at the intersection of Langley Road and Covey Road

☑ Town ☐ Village ☐ City

Florida

County: Montgomery

Stream/Waterbody Name: tributary to Mohawk River

Project Location Coordinates: Enter Latitude and Longitude in degrees, minutes, seconds:

Latitude: N42 ° 53 ' 40 " Longitude: W74 ° 10 ' 10 "

6. Project Description: Provide the following information about your project. Continue each response and provide any additional information on other pages. **Attach plans on separate pages.**

a. Purpose of the proposed project:

This project involves the replacement of an existing culvert under Langley Road that allows a tributary to the Mohawk River to flow beneath the roadway. All work will be completed as per the plans submitted with the application entitled "Montgomery County, Montgomery County Culvert Replacement, Contract No. 1 - Town of Amsterdam, Contract No. 2 - Town of Florida" by John M. McDonald Engineering.

b. Description of current site conditions:

c. Proposed site changes:

d. Type of structures and fill materials to be installed, and quantity of materials to be used (e.g., square feet of coverage, cubic yards of fill material, structures below ordinary/mean high water, etc.):

e. Area of excavation or dredging, volume of material to be removed, location of dredged material placement:

f. Is tree cutting or clearing proposed? ☐ Yes If Yes, explain below. ☑ No

Timing of the proposed cutting or clearing (month/year):

Number of trees to be cut: Acreage of trees to be cleared:

g. Work methods and type of equipment to be used:

h. Describe the planned sequence of activities:

i. Pollution control methods and other actions proposed to mitigate environmental impacts:

j. Erosion and silt control methods that will be used to prevent water quality impacts:

Silt fence

k. Alternatives considered to avoid regulated areas. If no feasible alternatives exist, explain how the project will minimize impacts:

l. Proposed use: ☐ Private ☑ Public ☐ Commercial

m. Proposed Start Date: October 2016 Estimated Completion Date: November 2016

n. Has work begun on project? ☐ Yes If Yes, explain below. ☑ No

o. Will project occupy Federal, State, or Municipal Land? ☑ Yes If Yes, explain below. ☐ No

The Town of Florida owns the Langley Road right-of-way

p. List any previous DEC, USACE, OGS or DOS Permit / Application numbers for activities at this location:

N/A

q. Will this project require additional Federal, State, or Local authorizations, including zoning changes?

☑ Yes If Yes, list below. ☐ No

NYS DEC & USACE Joint Application for Permit

7. **Signatures.**
Applicant and Owner (If different) must sign the application.
Append additional pages of this Signature section if there are multiple Applicants, Owners or Contact/Agents.

I hereby affirm that information provided on this form and all attachments submitted herewith is true to the best of my knowledge and belief.

Permission to Inspect - I hereby consent to Agency inspection of the project site and adjacent property areas. Agency staff may enter the property without notice between 7:00 am and 7:00 pm, Monday - Friday. Inspection may occur without the owner, applicant or agent present. If the property is posted with "keep out" signs or fenced with an unlocked gate, Agency staff may still enter the property. Agency staff may take measurements, analyze site physical characteristics, take soil and vegetation samples, sketch and photograph the site. I understand that failure to give this consent may result in denial of the permit(s) sought by this application.

False statements made herein are punishable as a Class A misdemeanor pursuant to Section 210.45 of the NYS Penal Law. Further, the applicant accepts full responsibility for all damage, direct or indirect, of whatever nature, and by whomever suffered, arising out of the project described herein and agrees to indemnify and save harmless the State from suits, actions, damages and costs of every name and description resulting from said project. In addition, Federal Law, 18 U.S.C., Section 1001 provides for a fine of not more than $10,000 or imprisonment for not more than 5 years, or both where an applicant knowingly and willingly falsifies, conceals, or covers up a material fact; or knowingly makes or uses a false, fictitious or fraudulent statement.

Signature of Applicant: [signature] Date: 2-21-17

Applicant Must be (check all that apply): ☑ Owner ☑ Operator ☐ Lessee

Printed Name: Eric Mead Title: Commissioner

Signature of Owner (if different than Applicant) Date:

Printed Name: Title:

Signature of Contact / Agent [signature] Date: 2/24/17

Printed Name: A. Thomas Bates, PE Title: Project Engineer

For Agency Use Only **DETERMINATION OF NO PERMIT REQUIRED**

Agency Application Number

(Agency Name) has determined that No Permit is required from this Agency for the project described in this application.

Agency Representative:
Printed Name Title
Signature Date

Short Environmental Assessment Form
Part 1 - Project Information

Instructions for Completing

Part 1 - Project Information. The applicant or project sponsor is responsible for the completion of Part 1. Responses become part of the application for approval or funding, are subject to public review, and may be subject to further verification. Complete Part 1 based on information currently available. If additional research or investigation would be needed to fully respond to any item, please answer as thoroughly as possible based on current information.

Complete all items in Part 1. You may also provide any additional information which you believe will be needed by or useful to the lead agency; attach additional pages as necessary to supplement any item.

Part 1 - Project and Sponsor Information

Name of Action or Project:
Langley Road Culvert Replacement

Project Location (describe, and attach a location map):
Langley Road, Montgomery County, Florida, New York

Brief Description of Proposed Action:
Replacement of (2) existing culvert pipes within the Langley Road right-of-way that allows a tributary to the Mohawk River to flow beneath the roadway. The existing culvert pipes are undersized and create a drainage problem where water pools behind a house.

Project will replace the (2) existing 36" CMP culverts with a 36"x60" box culvert and direct stormwater to an existing watercourse.

This project also includes the addition of approximately 570 feet of ditch and approximately 780 feet of culvert pipe to divert storm water to an existing water course.

Name of Applicant or Sponsor:	Telephone: (518) 853-3814
Montgomery County	E-Mail: emead@co.montgomery.ny.us

Address:	State:	Zip Code:
6 Park Street	NY	12068
City/PO: Fonda		

	NO	YES
1. Does the proposed action only involve the legislative adoption of a plan, local law, ordinance, administrative rule, or regulation? If Yes, attach a narrative description of the intent of the proposed action and the environmental resources that may be affected in the municipality and proceed to Part 2. If no, continue to question 2.	☑	☐
2. Does the proposed action require a permit, approval or funding from any other governmental Agency? If Yes, list agency(s) name and permit or approval: NYS DEC & USACE Joint Application for Permit	☐	☑

3.a. Total acreage of the site of the proposed action? <5 acres
b. Total acreage to be physically disturbed? <5 acres
c. Total acreage (project site and any contiguous properties) owned or controlled by the applicant or project sponsor? <5 acres

4. Check all land uses that occur on, adjoining and near the proposed action.
☐ Urban ☑ Rural (non-agriculture) ☐ Industrial ☐ Commercial ☑ Residential (suburban)
☑ Forest ☑ Agriculture ☐ Aquatic ☐ Other (specify): _____
☐ Parkland

	NO	YES	N/A
5. Is the proposed action, a. A permitted use under the zoning regulations?	☐	☑	☐
b. Consistent with the adopted comprehensive plan?	☐	☑	☐
6. Is the proposed action consistent with the predominant character of the existing built or natural landscape?	NO ☐	YES ☑	
7. Is the site of the proposed action located in, or does it adjoin, a state listed Critical Environmental Area? If Yes, identify: _____	NO ☑	YES ☐	
8. a. Will the proposed action result in a substantial increase in traffic above present levels?	NO ☑	YES ☐	
b. Are public transportation service(s) available at or near the site of the proposed action?	☑	☐	
c. Are any pedestrian accommodations or bicycle routes available on or near site of the proposed action?	☑	☐	
9. Does the proposed action meet or exceed the state energy code requirements? If the proposed action will exceed requirements, describe design features and technologies: _____	NO ☑	YES ☐	
10. Will the proposed action connect to an existing public/private water supply? If No, describe method for providing potable water: _____	NO ☑	YES ☐	
11. Will the proposed action connect to existing wastewater utilities? If No, describe method for providing wastewater treatment: _____	NO ☑	YES ☐	
12. a. Does the site contain a structure that is listed on either the State or National Register of Historic Places?	☑	☐	
b. Is the proposed action located in an archeological sensitive area?	☑	☐	
13. a. Does any portion of the site of the proposed action, or lands adjoining the proposed action, contain wetlands or other waterbodies regulated by a federal, state or local agency?	NO ☐	YES ☑	
b. Would the proposed action physically alter, or encroach into, any existing wetland or waterbody? If Yes, identify the wetland or waterbody and extent of alterations in square feet or acres: _____	☑	☐	
14. Identify the typical habitat types that occur on, or are likely to be found on the project site. Check all that apply: ☐ Shoreline ☑ Forest ☑ Agricultural/grasslands ☐ Early mid-successional ☐ Wetland ☐ Urban ☑ Suburban			
15. Does the site of the proposed action contain any species of animal, or associated habitats, listed by the State or Federal government as threatened or endangered?	NO ☑	YES ☐	
16. Is the project site located in the 100 year flood plain?	NO ☑	YES ☐	
17. Will the proposed action create storm water discharge, either from point or non-point sources? If Yes, a. Will storm water discharges flow to adjacent properties? ☐ NO ☐ YES	NO ☑	YES ☐	
b. Will storm water discharges be directed to established conveyance systems (runoff and storm drains)? ☐ NO ☐ YES If Yes, briefly describe: _____			

	NO	YES
18. Does the proposed action include construction or other activities that result in the impoundment of water or other liquids (e.g. retention pond, waste lagoon, dam)? If Yes, explain purpose and size:	✓	
19. Has the site of the proposed action or an adjoining property been the location of an active or closed solid waste management facility? If Yes, describe:	✓	
20. Has the site of the proposed action or an adjoining property been the subject of remediation (ongoing or completed) for hazardous waste? If Yes, describe:	✓	

I AFFIRM THAT THE INFORMATION PROVIDED ABOVE IS TRUE AND ACCURATE TO THE BEST OF MY KNOWLEDGE

Applicant/sponsor name: Montgomery County Date: 2-21-17

Signature:

PRINT FORM

Agency Use Only [If applicable]

Project:

Date:

Short Environmental Assessment Form
Part 2 - Impact Assessment

Part 2 is to be completed by the Lead Agency.
Answer all of the following questions in Part 2 using the information contained in Part 1 and other materials submitted by the project sponsor or otherwise available to the reviewer. When answering the questions the reviewer should be guided by the concept "Have my responses been reasonable considering the scale and context of the proposed action?"

	No, or small impact may occur	Moderate to large impact may occur
1. Will the proposed action create a material conflict with an adopted land use plan or zoning regulations?	✓	
2. Will the proposed action result in a change in the use or intensity of use of land?	✓	
3. Will the proposed action impair the character or quality of the existing community?	✓	
4. Will the proposed action have an impact on the environmental characteristics that caused the establishment of a Critical Environmental Area (CEA)?	✓	
5. Will the proposed action result in an adverse change in the existing level of traffic or affect existing infrastructure for mass transit, biking or walkway?	✓	
6. Will the proposed action cause an increase in the use of energy and it fails to incorporate reasonably available energy conservation or renewable energy opportunities?	✓	
7. Will the proposed action impact existing: a. public / private water supplies?	✓	
b. public / private wastewater treatment utilities?	✓	
8. Will the proposed action impair the character or quality of important historic, archaeological, architectural or aesthetic resources?	✓	
9. Will the proposed action result in an adverse change to natural resources (e.g., wetlands, waterbodies, groundwater, air quality, flora and fauna)?	✓	
10. Will the proposed action result in an increase in the potential for erosion, flooding or drainage problems?	✓	
11. Will the proposed action create a hazard to environmental resources or human health?	✓	

PRINT FORM

Agency Use Only [If applicable]

Project:

Date:

Short Environmental Assessment Form
Part 3 Determination of Significance

For every question in Part 2 that was answered "moderate to large impact may occur", or if there is a need to explain why a particular element of the proposed action may or will not result in a significant adverse environmental impact, please complete Part 3. Part 3 should, in sufficient detail, identify the impact, including any measures or design elements that have been included by the project sponsor to avoid or reduce impacts. Part 3 should also explain how the lead agency determined that the impact may or will not be significant. Each potential impact should be assessed considering its setting, probability of occurring, duration, irreversibility, geographic scope and magnitude. Also consider the potential for short-term, long-term and cumulative impacts.

☐ Check this box if you have determined, based on the information and analysis above, and any supporting documentation, that the proposed action may result in one or more potentially large or significant adverse impacts and an environmental impact statement is required.

☑ Check this box if you have determined, based on the information and analysis above, and any supporting documentation, that the proposed action will not result in any significant adverse environmental impacts.

Montgomery County Board
Name of Lead Agency

2-21-17
Date

Eric Mead
Print or Type Name of Responsible Officer in Lead Agency

Commissioner
Title of Responsible Officer

Signature of Responsible Officer in Lead Agency

Signature of Preparer (if different from Responsible Officer)

PRINT FORM

Montgomery County
Culvert Replacement Project

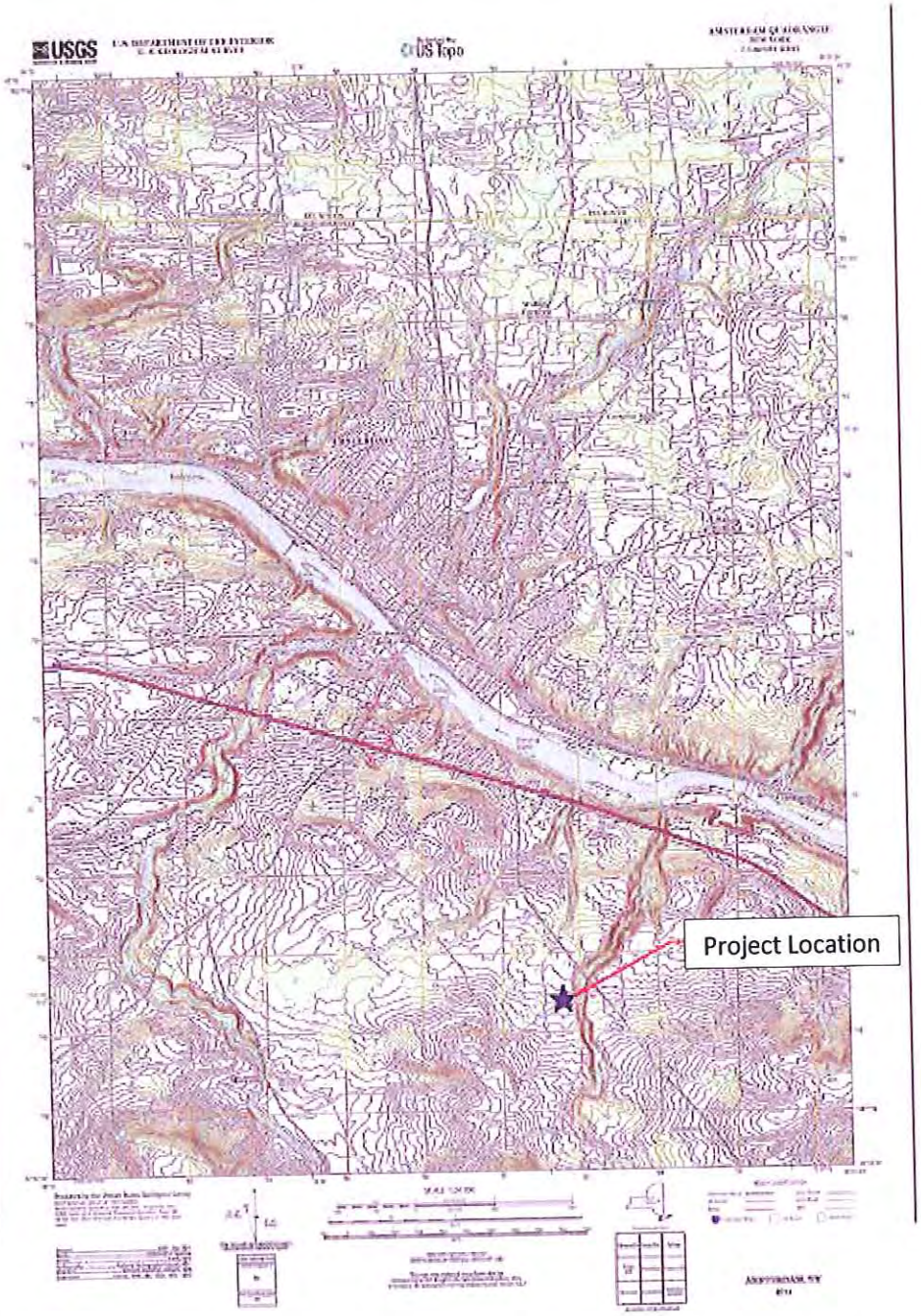

Site Location

Town of Florida, Langley Road Culvert Replacement

USGS, Amsterdam Quadrangle

Lat: N42°53'40" Long: W74°10'10"

PERMIT PACKAGE

TOWN OF FLORIDA
MCKINNEY ROAD 4A CULVERT REPLACEMENT

- PERMISSION TO INSPECT PROPERTY – 1 PAGE
- JOINT APPLICATION FORM – 4 PAGES
- SHORT ENVIRONMENTAL ASSESSMENT FORM PART 1 – 3 PAGES
- SHORT ENVIRONMENTAL ASSESSMENT FORM PART 2 – 2 PAGES
- SITE LOCATION, USGS QUADRANGLE – 1 PAGE

NEW YORK STATE OF OPPORTUNITY. | Department of Environmental Conservation

PERMISSION TO INSPECT PROPERTY

By signing this permission form for submission with an application for a permit(s) to the Department of Environmental Conservation ("DEC"), the signer consents to inspection by DEC staff of the project site or facility for which a permit is sought and, to the extent necessary, areas adjacent to the project site or facility. This consent allows DEC staff to enter upon and pass through such property in order to inspect the project site or facility, without prior notice, between the hours of 7:00 a.m. and 7:00 p.m., Monday through Friday. If DEC staff should wish to conduct an inspection at any other times, DEC staff will so notify the applicant and will obtain a separate consent for such an inspection.

Inspections may take place as part of the application review prior to a decision to grant or deny the permit(s) sought. By signing this consent form, the signer agrees that this consent remains in effect as long as the application is pending, and is effective regardless of whether the signer, applicant or an agent is present at the time of the inspection. In the event that the project site or facility is posted with any form of "posted" or "keep out" notices, or fenced in with an unlocked gate, this permission authorizes DEC staff to disregard such notices or unlocked gates at the time of inspection.

The signer further agrees that during an inspection, DEC staff may, among other things, take measurements, may analyze physical characteristics of the site including, but not limited to, soils and vegetation (taking samples for analysis), and may make drawings and take photographs.

Failure to grant consent for an inspection is grounds for, and may result in, denial of the permit(s) sought by the application.

Permission is granted for inspection of property located at the following address(es):

McKinney Road approximately 2400 feet southwest of the
intersection of McKinney Road and Millers Corners Road

*By signing this form, I affirm under penalty of perjury that I am authorized to give consent to entry by DEC staff as described above. I understand that false statements made herein are punishable as a Class A misdemeanor pursuant to Section 210.45 of the Penal Law.**

Eric Mead, Commissioner		2-21-17
Print Name and Title	Signature	Date

*The signer of this form must be an individual or authorized representative of a legal entity that:

- owns fee title and is in possession of the property identified above;
- maintains possessory interest in the property through a lease, rental agreement or other legally binding agreement; or
- is provided permission to act on behalf of an individual or legal entity possessing fee title or other possessory interest in the property for the purpose of consenting to inspection of such property.

NEW YORK STATE | Department of Environmental Conservation | Office of General Services | Department of State

US Army Corps of Engineers

JOINT APPLICATION FORM

For Permits for activities activities affecting streams, waterways, waterbodies, wetlands, coastal areas, sources of water, and endangered and threatened species.

You must separately apply for and obtain Permits from each involved agency before starting work. Please read all instructions.

1. **Applications To:**

>NYS Department of Environmental Conservation ☑ Check here to confirm you sent this form to NYSDEC.

Check all permits that apply:

- ☑ Stream Disturbance
- ☐ Excavation and Fill in Navigable Waters
- ☐ Docks, Moorings or Platforms
- ☐ Dams and Impoundment Structures
- ☐ 401 Water Quality Certification
- ☐ Freshwater Wetlands
- ☐ Tidal Wetlands
- ☐ Wild, Scenic and Recreational Rivers
- ☐ Coastal Erosion Management
- ☐ Water Withdrawal
- ☐ Long Island Well
- ☐ Incidental Take of Endangered / Threatened Species

>US Army Corps of Engineers ☑ Check here to confirm you sent this form to USACE.

Check all permits that apply: ☐ Section 404 Clean Water Act ☐ Section 10 Rivers and Harbors Act

Is the project Federally funded? ☐ Yes ☑ No

If yes, name of Federal Agency:

General Permit Type(s), if known:

Preconstruction Notification: ☐ Yes ☑ No

>NYS Office of General Services ☐ Check here to confirm you sent this form to NYSOGS.

Check all permits that apply:

- ☐ State Owned Lands Under Water
- ☐ Utility Easement (pipelines, conduits, cables, etc.)
- ☐ Docks, Moorings or Platforms

>NYS Department of State ☐ Check here to confirm you sent this form to NYSDOS.

Check if this applies: ☐ Coastal Consistency Concurrence

2. **Name of Applicant**: Montgomery County

Taxpayer ID (if applicant is NOT an individual): 14-6002568

Mailing Address: 6 Park Street

Post Office / City: Fonda

State: NY

Zip: 12068

Telephone: (518) 853-3814

Email: emead@co.montgomery.ny.us

Applicant Must be (check all that apply): ☑ Owner ☑ Operator ☐ Lessee

3. **Name of Property Owner (if different than Applicant)**

Mailing Address

Post Office / City

State

Zip

Telephone

Email

For Agency Use Only	Agency Application Number:

4. Name of Contact / Agent

A. Thomas Bates, PE

Mailing Address: 7 South Church Street

Post Office / City: Schenectady

State: NY

Zip: 12305

Telephone: (518) 382-1774

Email: tbates@primeeng.com

5. Project / Facility Name

McKinney Road 4A Culvert Replacement

Property Tax Map Section / Block / Lot Number: N/A

Project Street Address, if applicable: McKinney Road

Post Office / City: Amsterdam

State: NY

Zip: 12010

Provide directions and distances to roads, intersections, bridges and bodies of water

Located in the Town of Florida approximately 2400 feet southwest of the intersection of McKinney Road and Millers Corners Road

☑ Town ☐ Village ☐ City

Florida

County: Montgomery

Stream/Waterbody Name: tributary to Schoharie Creek

Project Location Coordinates: Enter Latitude and Longitude in degrees, minutes, seconds:

Latitude: N42 ° 51 ' 12 " Longitude: W74 ° 15 ' 22 "

6. Project Description: Provide the following information about your project. Continue each response and provide any additional information on other pages. **Attach plans on separate pages.**

a. Purpose of the proposed project:

This project involves the replacement of an existing culvert under McKinney Road that allows a tributary to Schoharie Creek to flow beneath the roadway. All work will be completed as per the plans submitted with the application entitled "Montgomery County, Montgomery County Culvert Replacement, Contract No. 1 - Town of Amsterdam, Contract No. 2 - Town of Florida" by John M. McDonald Engineering.

b. Description of current site conditions:

c. Proposed site changes:

d. Type of structures and fill materials to be installed, and quantity of materials to be used (e.g., square feet of coverage, cubic yards of fill material, structures below ordinary/mean high water, etc.):

e. Area of excavation or dredging, volume of material to be removed, location of dredged material placement:

f. Is tree cutting or clearing proposed? ☐ Yes If Yes, explain below. ☑ No

Timing of the proposed cutting or clearing (month/year):

Number of trees to be cut: Acreage of trees to be cleared:

g. Work methods and type of equipment to be used:

h. Describe the planned sequence of activities:

i. Pollution control methods and other actions proposed to mitigate environmental impacts:

j. Erosion and silt control methods that will be used to prevent water quality impacts:

Silt fence

k. Alternatives considered to avoid regulated areas. If no feasible alternatives exist, explain how the project will minimize impacts:

l. Proposed use: ☐ Private ☑ Public ☐ Commercial

m. Proposed Start Date: October 2016 Estimated Completion Date: November 2016

n. Has work begun on project? ☐ Yes If Yes, explain below. ☑ No

o. Will project occupy Federal, State, or Municipal Land? ☑ Yes If Yes, explain below. ☐ No

The Town of Florida owns the McKinney Road right-of-way

p. List any previous DEC, USACE, OGS or DOS Permit / Application numbers for activities at this location:

N/A

q. Will this project require additional Federal, State, or Local authorizations, including zoning changes?

☑ Yes If Yes, list below. ☐ No

NYS DEC & USACE Joint Application for Permit

7. **Signatures.**
Applicant and Owner (If different) must sign the application.
Append additional pages of this Signature section if there are multiple Applicants, Owners or Contact/Agents.

I hereby affirm that information provided on this form and all attachments submitted herewith is true to the best of my knowledge and belief.

Permission to Inspect - I hereby consent to Agency inspection of the project site and adjacent property areas. Agency staff may enter the property without notice between 7:00 am and 7:00 pm, Monday - Friday. Inspection may occur without the owner, applicant or agent present. If the property is posted with "keep out" signs or fenced with an unlocked gate, Agency staff may still enter the property. Agency staff may take measurements, analyze site physical characteristics, take soil and vegetation samples, sketch and photograph the site. I understand that failure to give this consent may result in denial of the permit(s) sought by this application.

False statements made herein are punishable as a Class A misdemeanor pursuant to Section 210.45 of the NYS Penal Law. Further, the applicant accepts full responsibility for all damage, direct or indirect, of whatever nature, and by whomever suffered, arising out of the project described herein and agrees to indemnify and save harmless the State from suits, actions, damages and costs of every name and description resulting from said project. In addition, Federal Law, 18 U.S.C., Section 1001 provides for a fine of not more than $10,000 or imprisonment for not more than 5 years, or both where an applicant knowingly and willingly falsifies, conceals, or covers up a material fact; or knowingly makes or uses a false, fictitious or fraudulent statement.

Signature of Applicant | Date: 2-21-17

Applicant Must be (check all that apply): ☑ Owner ☑ Operator ☐ Lessee

Printed Name: Eric Mead | Title: Commissioner

Signature of Owner (if different than Applicant) | Date:

Printed Name: | Title:

Signature of Contact / Agent | Date: 2/24/17

Printed Name: A. Thomas Bates, PE | Title: Project Engineer

For Agency Use Only **DETERMINATION OF NO PERMIT REQUIRED**

Agency Application Number

(Agency Name) has determined that No Permit is required from this Agency for the project described in this application.

Agency Representative:

Printed Name | Title

Signature | Date

Short Environmental Assessment Form
Part 1 - Project Information

Instructions for Completing

Part 1 - Project Information. The applicant or project sponsor is responsible for the completion of Part 1. Responses become part of the application for approval or funding, are subject to public review, and may be subject to further verification. Complete Part 1 based on information currently available. If additional research or investigation would be needed to fully respond to any item, please answer as thoroughly as possible based on current information.

Complete all items in Part 1. You may also provide any additional information which you believe will be needed by or useful to the lead agency; attach additional pages as necessary to supplement any item.

Part 1 - Project and Sponsor Information

Name of Action or Project:
McKinney Road 4A Culvert Repalcement

Project Location (describe, and attach a location map):
McKinney Road, Montgomery County, Florida, New York

Brief Description of Proposed Action:
Replacement of an existing culvert pipe within the McKinney Road right-of-way that allows a tributary to Schoharie creek to flow beneath the roadway. The existing culvert pipe is undersized.

Project will replace existing 72 inch CMP culvert with an 84 inch HDPE culvert.

Name of Applicant or Sponsor:	Telephone: (518) 853-3814
Montgomery County	E-Mail: emead@co.montgomery.ny.us

Address:
6 Park Street

City/PO:	State:	Zip Code:
Fonda	NY	12068

	NO	YES
1. Does the proposed action only involve the legislative adoption of a plan, local law, ordinance, administrative rule, or regulation? If Yes, attach a narrative description of the intent of the proposed action and the environmental resources that may be affected in the municipality and proceed to Part 2. If no, continue to question 2.	☑	☐
2. Does the proposed action require a permit, approval or funding from any other governmental Agency? If Yes, list agency(s) name and permit or approval: NYS DEC & USACE Joint Application for Permit	☐	☑

3.a. Total acreage of the site of the proposed action? <1 acres
b. Total acreage to be physically disturbed? <1 acres
c. Total acreage (project site and any contiguous properties) owned or controlled by the applicant or project sponsor? <1 acres

4. Check all land uses that occur on, adjoining and near the proposed action.
☐ Urban ☑ Rural (non-agriculture) ☐ Industrial ☐ Commercial ☑ Residential (suburban)
☑ Forest ☑ Agriculture ☐ Aquatic ☐ Other (specify): _____
☐ Parkland

	NO	YES	N/A
5. Is the proposed action,			
a. A permitted use under the zoning regulations?	☐	☑	☐
b. Consistent with the adopted comprehensive plan?	☐	☑	☐

	NO	YES
6. Is the proposed action consistent with the predominant character of the existing built or natural landscape?	☐	☑
7. Is the site of the proposed action located in, or does it adjoin, a state listed Critical Environmental Area? If Yes, identify: _____	☑	☐
8. a. Will the proposed action result in a substantial increase in traffic above present levels?	☑	☐
b. Are public transportation service(s) available at or near the site of the proposed action?	☑	☐
c. Are any pedestrian accommodations or bicycle routes available on or near site of the proposed action?	☑	☐
9. Does the proposed action meet or exceed the state energy code requirements? If the proposed action will exceed requirements, describe design features and technologies: _____	☑	☐
10. Will the proposed action connect to an existing public/private water supply? If No, describe method for providing potable water: _____	☑	☐
11. Will the proposed action connect to existing wastewater utilities? If No, describe method for providing wastewater treatment: _____	☑	☐
12. a. Does the site contain a structure that is listed on either the State or National Register of Historic Places?	☑	☐
b. Is the proposed action located in an archeological sensitive area?	☑	☐
13. a. Does any portion of the site of the proposed action, or lands adjoining the proposed action, contain wetlands or other waterbodies regulated by a federal, state or local agency?	☐	☑
b. Would the proposed action physically alter, or encroach into, any existing wetland or waterbody? If Yes, identify the wetland or waterbody and extent of alterations in square feet or acres: _____	☑	☐

14. Identify the typical habitat types that occur on, or are likely to be found on the project site. Check all that apply:
☐ Shoreline ☑ Forest ☑ Agricultural/grasslands ☐ Early mid-successional
☐ Wetland ☐ Urban ☑ Suburban

	NO	YES
15. Does the site of the proposed action contain any species of animal, or associated habitats, listed by the State or Federal government as threatened or endangered?	☑	☐
16. Is the project site located in the 100 year flood plain?	☑	☐
17. Will the proposed action create storm water discharge, either from point or non-point sources? If Yes, a. Will storm water discharges flow to adjacent properties? ☐ NO ☐ YES	☑	☐
b. Will storm water discharges be directed to established conveyance systems (runoff and storm drains)? If Yes, briefly describe: ☐ NO ☐ YES		

	NO	YES
18. Does the proposed action include construction or other activities that result in the impoundment of water or other liquids (e.g. retention pond, waste lagoon, dam)? If Yes, explain purpose and size:	✓	
19. Has the site of the proposed action or an adjoining property been the location of an active or closed solid waste management facility? If Yes, describe:	✓	
20. Has the site of the proposed action or an adjoining property been the subject of remediation (ongoing or completed) for hazardous waste? If Yes, describe:	✓	

I AFFIRM THAT THE INFORMATION PROVIDED ABOVE IS TRUE AND ACCURATE TO THE BEST OF MY KNOWLEDGE

Applicant/sponsor name: Montgomery County Date: 2-21-17

Signature:

PRINT FORM

Agency Use Only [If applicable]

Project:

Date:

Short Environmental Assessment Form
Part 2 - Impact Assessment

Part 2 is to be completed by the Lead Agency.
Answer all of the following questions in Part 2 using the information contained in Part 1 and other materials submitted by the project sponsor or otherwise available to the reviewer. When answering the questions the reviewer should be guided by the concept "Have my responses been reasonable considering the scale and context of the proposed action?"

	No, or small impact may occur	Moderate to large impact may occur
1. Will the proposed action create a material conflict with an adopted land use plan or zoning regulations?	☑	☐
2. Will the proposed action result in a change in the use or intensity of use of land?	☑	☐
3. Will the proposed action impair the character or quality of the existing community?	☑	☐
4. Will the proposed action have an impact on the environmental characteristics that caused the establishment of a Critical Environmental Area (CEA)?	☑	☐
5. Will the proposed action result in an adverse change in the existing level of traffic or affect existing infrastructure for mass transit, biking or walkway?	☑	☐
6. Will the proposed action cause an increase in the use of energy and it fails to incorporate reasonably available energy conservation or renewable energy opportunities?	☑	☐
7. Will the proposed action impact existing: a. public / private water supplies?	☑	☐
b. public / private wastewater treatment utilities?	☑	☐
8. Will the proposed action impair the character or quality of important historic, archaeological, architectural or aesthetic resources?	☑	☐
9. Will the proposed action result in an adverse change to natural resources (e.g., wetlands, waterbodies, groundwater, air quality, flora and fauna)?	☑	☐
10. Will the proposed action result in an increase in the potential for erosion, flooding or drainage problems?	☑	☐
11. Will the proposed action create a hazard to environmental resources or human health?	☑	☐

PRINT FORM

Agency Use Only [If applicable]

Project:

Date:

Short Environmental Assessment Form
Part 3 Determination of Significance

For every question in Part 2 that was answered "moderate to large impact may occur", or if there is a need to explain why a particular element of the proposed action may or will not result in a significant adverse environmental impact, please complete Part 3. Part 3 should, in sufficient detail, identify the impact, including any measures or design elements that have been included by the project sponsor to avoid or reduce impacts. Part 3 should also explain how the lead agency determined that the impact may or will not be significant. Each potential impact should be assessed considering its setting, probability of occurring, duration, irreversibility, geographic scope and magnitude. Also consider the potential for short-term, long-term and cumulative impacts.

☐ Check this box if you have determined, based on the information and analysis above, and any supporting documentation, that the proposed action may result in one or more potentially large or significant adverse impacts and an environmental impact statement is required.

☑ Check this box if you have determined, based on the information and analysis above, and any supporting documentation, that the proposed action will not result in any significant adverse environmental impacts.

Montgomery County Board
Name of Lead Agency

2-21-17
Date

Eric Mead
Print or Type Name of Responsible Officer in Lead Agency

Commissioner
Title of Responsible Officer

Signature of Responsible Officer in Lead Agency

Signature of Preparer (if different from Responsible Officer)

PRINT FORM

Montgomery County
Culvert Replacement Project

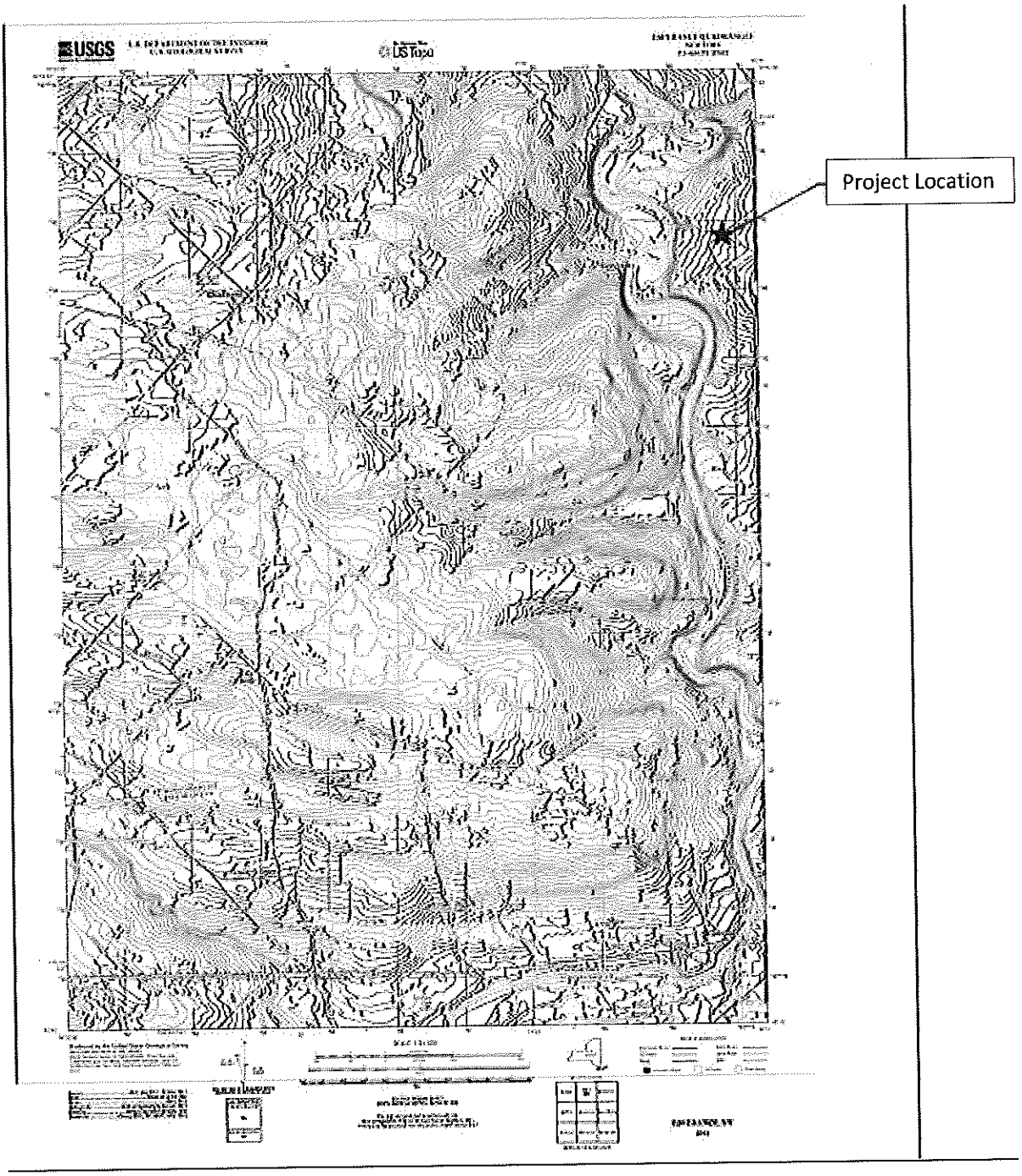

Site Location

Town of Florida, McKinney Road 4A Culvert Replacement

USGS, Esperance Quadrangle

Montgomery County
Culvert Replacement Project

Lat: N42°51'12" Long: W74°15'22"

PERMIT PACKAGE

TOWN OF FLORIDA
MCKINNEY ROAD 4B CULVERT REPLACEMENT

- PERMISSION TO INSPECT PROPERTY – 1 PAGE
- JOINT APPLICATION FORM – 4 PAGES
- SHORT ENVIRONMENTAL ASSESSMENT FORM PART 1 – 3 PAGES
- SHORT ENVIRONMENTAL ASSESSMENT FORM PART 2 – 2 PAGES
- SITE LOCATION, USGS QUADRANGLE – 1 PAGE

NEW YORK STATE OF OPPORTUNITY. | Department of Environmental Conservation

PERMISSION TO INSPECT PROPERTY

By signing this permission form for submission with an application for a permit(s) to the Department of Environmental Conservation ("DEC"), the signer consents to inspection by DEC staff of the project site or facility for which a permit is sought and, to the extent necessary, areas adjacent to the project site or facility. This consent allows DEC staff to enter upon and pass through such property in order to inspect the project site or facility, without prior notice, between the hours of 7:00 a.m. and 7:00 p.m., Monday through Friday. If DEC staff should wish to conduct an inspection at any other times, DEC staff will so notify the applicant and will obtain a separate consent for such an inspection.

Inspections may take place as part of the application review prior to a decision to grant or deny the permit(s) sought. By signing this consent form, the signer agrees that this consent remains in effect as long as the application is pending, and is effective regardless of whether the signer, applicant or an agent is present at the time of the inspection. In the event that the project site or facility is posted with any form of "posted" or "keep out" notices, or fenced in with an unlocked gate, this permission authorizes DEC staff to disregard such notices or unlocked gates at the time of inspection.

The signer further agrees that during an inspection, DEC staff may, among other things, take measurements, may analyze physical characteristics of the site including, but not limited to, soils and vegetation (taking samples for analysis), and may make drawings and take photographs.

Failure to grant consent for an inspection is grounds for, and may result in, denial of the permit(s) sought by the application.

Permission is granted for inspection of property located at the following address(es):

McKinney Road approximately 3200 feet north of the
intersection of McKinney Road and Peck Road

*By signing this form, I affirm under penalty of perjury that I am authorized to give consent to entry by DEC staff as described above. I understand that false statements made herein are punishable as a Class A misdemeanor pursuant to Section 210.45 of the Penal Law.**

Eric Mead, Commissioner		2-21-17
Print Name and Title	Signature	Date

*The signer of this form must be an individual or authorized representative of a legal entity that:

- owns fee title and is in possession of the property identified above;
- maintains possessory interest in the property through a lease, rental agreement or other legally binding agreement; or
- is provided permission to act on behalf of an individual or legal entity possessing fee title or other possessory interest in the property for the purpose of consenting to inspection of such property.

NEW YORK STATE | Department of Environmental Conservation | Office of General Services | Department of State

US Army Corps of Engineers

JOINT APPLICATION FORM

For Permits for activities activities affecting streams, waterways, waterbodies, wetlands, coastal areas, sources of water, and endangered and threatened species.

You must separately apply for and obtain Permits from each involved agency before starting work. Please read all instructions.

1. **Applications To:**

>NYS Department of Environmental Conservation ☑ Check here to confirm you sent this form to NYSDEC.

Check all permits that apply:

- ☑ Stream Disturbance
- ☐ Excavation and Fill in Navigable Waters
- ☐ Docks, Moorings or Platforms
- ☐ Dams and Impoundment Structures
- ☐ 401 Water Quality Certification
- ☐ Freshwater Wetlands
- ☐ Tidal Wetlands
- ☐ Wild, Scenic and Recreational Rivers
- ☐ Coastal Erosion Management
- ☐ Water Withdrawal
- ☐ Long Island Well
- ☐ Incidental Take of Endangered / Threatened Species

>US Army Corps of Engineers ☑ Check here to confirm you sent this form to USACE.

Check all permits that apply: ☐ Section 404 Clean Water Act ☐ Section 10 Rivers and Harbors Act

Is the project Federally funded? ☐ Yes ☑ No

If yes, name of Federal Agency:

General Permit Type(s), if known:

Preconstruction Notification: ☐ Yes ☑ No

>NYS Office of General Services ☐ Check here to confirm you sent this form to NYSOGS.

Check all permits that apply:

- ☐ State Owned Lands Under Water
- ☐ Utility Easement (pipelines, conduits, cables, etc.)
- ☐ Docks, Moorings or Platforms

>NYS Department of State ☐ Check here to confirm you sent this form to NYSDOS.

Check if this applies: ☐ Coastal Consistency Concurrence

2. **Name of Applicant**: Montgomery County

Taxpayer ID (if applicant is NOT an individual): 14-6002568

Mailing Address: 6 Park Street

Post Office / City: Fonda

State: NY

Zip: 12068

Telephone: (518) 853-3814

Email: emead@co.montgomery.ny.us

Applicant Must be (check all that apply): ☑ Owner ☑ Operator ☐ Lessee

3. **Name of Property Owner (if different than Applicant)**

Mailing Address

Post Office / City

State

Zip

Telephone

Email

For Agency Use Only	Agency Application Number:

4. Name of Contact / Agent

A. Thomas Bates, PE

Mailing Address	Post Office / City	State	Zip
7 South Church Street	Schenectady	NY	12305

Telephone (518) 382-1774 Email tbates@primeeng.com

5. Project / Facility Name

McKinney Road 4B

Property Tax Map Section / Block / Lot Number: N/A

Project Street Address, if applicable	Post Office / City	State	Zip
McKinney Road	Amsterdam	NY	12010

Provide directions and distances to roads, intersections, bridges and bodies of water

Located in the Town of Florida approximately 3200 feet north of the intersection of McKinney Road and Peck Road

☑ Town ☐ Village ☐ City

County	Stream/Waterbody Name
Montgomery	tributary to Schoharie Creek

Project Location Coordinates: Enter Latitude and Longitude in degrees, minutes, seconds:

Latitude: N42 ° 50 ' 09 " Longitude: W74 ° 15 ' 02 "

6. Project Description: Provide the following information about your project. Continue each response and provide any additional information on other pages. **Attach plans on separate pages.**

a. Purpose of the proposed project:

This project involves the replacement of an existing culvert under McKinney Road that allows a tributary to Schoharie Creek to flow beneath the roadway. All work will be completed as per the plans submitted with the application entitled "Montgomery County, Montgomery County Culvert Replacement, Contract No. 1 - Town of Amsterdam, Contract No. 2 - Town of Florida" by John M. McDonald Engineering.

b. Description of current site conditions:

c. Proposed site changes:

d. Type of structures and fill materials to be installed, and quantity of materials to be used (e.g., square feet of coverage, cubic yards of fill material, structures below ordinary/mean high water, etc.):

e. Area of excavation or dredging, volume of material to be removed, location of dredged material placement:

f. Is tree cutting or clearing proposed? ☐ Yes If Yes, explain below. ☑ No

Timing of the proposed cutting or clearing (month/year):

Number of trees to be cut: Acreage of trees to be cleared:

g. Work methods and type of equipment to be used:

h. Describe the planned sequence of activities:

i. Pollution control methods and other actions proposed to mitigate environmental impacts:

j. Erosion and silt control methods that will be used to prevent water quality impacts:

Silt fence

k. Alternatives considered to avoid regulated areas. If no feasible alternatives exist, explain how the project will minimize impacts:

l. Proposed use: ☐ Private ☑ Public ☐ Commercial

m. Proposed Start Date: October 2016 Estimated Completion Date: November 2016

n. Has work begun on project? ☐ Yes If Yes, explain below. ☑ No

o. Will project occupy Federal, State, or Municipal Land? ☑ Yes If Yes, explain below. ☐ No

The Town of Florida owns the McKinney Road right-of-way

p. List any previous DEC, USACE, OGS or DOS Permit / Application numbers for activities at this location:

N/A

q. Will this project require additional Federal, State, or Local authorizations, including zoning changes?

☑ Yes If Yes, list below. ☐ No

NYS DEC & USACE Joint Application for Permit

7. **Signatures.**
Applicant and Owner (If different) must sign the application.
Append additional pages of this Signature section if there are multiple Applicants, Owners or Contact/Agents.

I hereby affirm that information provided on this form and all attachments submitted herewith is true to the best of my knowledge and belief.

Permission to Inspect - I hereby consent to Agency inspection of the project site and adjacent property areas. Agency staff may enter the property without notice between 7:00 am and 7:00 pm, Monday - Friday. Inspection may occur without the owner, applicant or agent present. If the property is posted with "keep out" signs or fenced with an unlocked gate, Agency staff may still enter the property. Agency staff may take measurements, analyze site physical characteristics, take soil and vegetation samples, sketch and photograph the site. I understand that failure to give this consent may result in denial of the permit(s) sought by this application.

False statements made herein are punishable as a Class A misdemeanor pursuant to Section 210.45 of the NYS Penal Law. Further, the applicant accepts full responsibility for all damage, direct or indirect, of whatever nature, and by whomever suffered, arising out of the project described herein and agrees to indemnify and save harmless the State from suits, actions, damages and costs of every name and description resulting from said project. In addition, Federal Law, 18 U.S.C., Section 1001 provides for a fine of not more than $10,000 or imprisonment for not more than 5 years, or both where an applicant knowingly and willingly falsifies, conceals, or covers up a material fact; or knowingly makes or uses a false, fictitious or fraudulent statement.

Signature of Applicant | Date: 2-21-17

Applicant Must be (check all that apply): ☑ Owner ☑ Operator ☐ Lessee

Printed Name: Eric Mead | Title: Commissioner

Signature of Owner (if different than Applicant) | Date:

Printed Name: | Title:

Signature of Contact / Agent | Date: 2/24/17

Printed Name: A. Thomas Bates, PE | Title: Project Engineer

For Agency Use Only **DETERMINATION OF NO PERMIT REQUIRED**

Agency Application Number

(Agency Name) has determined that No Permit is required from this Agency for the project described in this application.

Agency Representative:

Printed Name | Title

Signature | Date

Short Environmental Assessment Form
Part 1 - Project Information

Instructions for Completing

Part 1 - Project Information. The applicant or project sponsor is responsible for the completion of Part 1. Responses become part of the application for approval or funding, are subject to public review, and may be subject to further verification. Complete Part 1 based on information currently available. If additional research or investigation would be needed to fully respond to any item, please answer as thoroughly as possible based on current information.

Complete all items in Part 1. You may also provide any additional information which you believe will be needed by or useful to the lead agency; attach additional pages as necessary to supplement any item.

Part 1 - Project and Sponsor Information

Name of Action or Project:
McKinney Road 4B Culvert Replacement

Project Location (describe, and attach a location map):
McKinney Road, Montgomery County, Florida, New York

Brief Description of Proposed Action:
Replacement of an existing culvert within the McKinney Road right-of-way that allows a tributary to Schoharie Creek to pass beneath the roadway.

Project will replace existing 84" CMP culvert with a 144"x144" box culvert.

Name of Applicant or Sponsor:	Telephone: (518) 853-3814
Montgomery County	E-Mail: emead@co.montgomery.ny.us

Address:
6 Park Street

City/PO:	State:	Zip Code:
Fonda	NY	12068

	NO	YES
1. Does the proposed action only involve the legislative adoption of a plan, local law, ordinance, administrative rule, or regulation? If Yes, attach a narrative description of the intent of the proposed action and the environmental resources that may be affected in the municipality and proceed to Part 2. If no, continue to question 2.	☑	☐
2. Does the proposed action require a permit, approval or funding from any other governmental Agency? If Yes, list agency(s) name and permit or approval: NYS DEC & USACE Joint Application for Permit	☐	☑

3.a. Total acreage of the site of the proposed action? <1 acres
b. Total acreage to be physically disturbed? <1 acres
c. Total acreage (project site and any contiguous properties) owned or controlled by the applicant or project sponsor? <1 acres

4. Check all land uses that occur on, adjoining and near the proposed action.
☐ Urban ☑ Rural (non-agriculture) ☐ Industrial ☐ Commercial ☑ Residential (suburban)
☑ Forest ☑ Agriculture ☐ Aquatic ☐ Other (specify): _____
☐ Parkland

	NO	YES	N/A
5. Is the proposed action,			
a. A permitted use under the zoning regulations?	☐	☑	☐
b. Consistent with the adopted comprehensive plan?	☐	☑	☐

	NO	YES
6. Is the proposed action consistent with the predominant character of the existing built or natural landscape?	☐	☑
7. Is the site of the proposed action located in, or does it adjoin, a state listed Critical Environmental Area? If Yes, identify: _____	☑	☐
8. a. Will the proposed action result in a substantial increase in traffic above present levels?	☑	☐
b. Are public transportation service(s) available at or near the site of the proposed action?	☑	☐
c. Are any pedestrian accommodations or bicycle routes available on or near site of the proposed action?	☑	☐
9. Does the proposed action meet or exceed the state energy code requirements? If the proposed action will exceed requirements, describe design features and technologies: _____	☑	☐
10. Will the proposed action connect to an existing public/private water supply? If No, describe method for providing potable water: _____	☑	☐
11. Will the proposed action connect to existing wastewater utilities? If No, describe method for providing wastewater treatment: _____	☑	☐
12. a. Does the site contain a structure that is listed on either the State or National Register of Historic Places?	☑	☐
b. Is the proposed action located in an archeological sensitive area?	☑	☐
13. a. Does any portion of the site of the proposed action, or lands adjoining the proposed action, contain wetlands or other waterbodies regulated by a federal, state or local agency?	☐	☑
b. Would the proposed action physically alter, or encroach into, any existing wetland or waterbody? If Yes, identify the wetland or waterbody and extent of alterations in square feet or acres: _____	☑	☐

14. Identify the typical habitat types that occur on, or are likely to be found on the project site. Check all that apply:
☐ Shoreline ☑ Forest ☑ Agricultural/grasslands ☐ Early mid-successional
☐ Wetland ☐ Urban ☑ Suburban

	NO	YES
15. Does the site of the proposed action contain any species of animal, or associated habitats, listed by the State or Federal government as threatened or endangered?	☑	☐
16. Is the project site located in the 100 year flood plain?	☑	☐
17. Will the proposed action create storm water discharge, either from point or non-point sources? If Yes, a. Will storm water discharges flow to adjacent properties? ☐ NO ☐ YES	☑	☐
b. Will storm water discharges be directed to established conveyance systems (runoff and storm drains)? If Yes, briefly describe: ☐ NO ☐ YES _____		

	NO	YES
18. Does the proposed action include construction or other activities that result in the impoundment of water or other liquids (e.g. retention pond, waste lagoon, dam)? If Yes, explain purpose and size:	✓	
19. Has the site of the proposed action or an adjoining property been the location of an active or closed solid waste management facility? If Yes, describe:	✓	
20. Has the site of the proposed action or an adjoining property been the subject of remediation (ongoing or completed) for hazardous waste? If Yes, describe:	✓	

I AFFIRM THAT THE INFORMATION PROVIDED ABOVE IS TRUE AND ACCURATE TO THE BEST OF MY KNOWLEDGE

Applicant/sponsor name: Montgomery County Date: 2-21-17

Signature:

PRINT FORM

Agency Use Only [If applicable]

Project:

Date:

Short Environmental Assessment Form
Part 2 - Impact Assessment

Part 2 is to be completed by the Lead Agency.
Answer all of the following questions in Part 2 using the information contained in Part 1 and other materials submitted by the project sponsor or otherwise available to the reviewer. When answering the questions the reviewer should be guided by the concept "Have my responses been reasonable considering the scale and context of the proposed action?"

	No, or small impact may occur	Moderate to large impact may occur
1. Will the proposed action create a material conflict with an adopted land use plan or zoning regulations?	✓	
2. Will the proposed action result in a change in the use or intensity of use of land?	✓	
3. Will the proposed action impair the character or quality of the existing community?	✓	
4. Will the proposed action have an impact on the environmental characteristics that caused the establishment of a Critical Environmental Area (CEA)?	✓	
5. Will the proposed action result in an adverse change in the existing level of traffic or affect existing infrastructure for mass transit, biking or walkway?	✓	
6. Will the proposed action cause an increase in the use of energy and it fails to incorporate reasonably available energy conservation or renewable energy opportunities?	✓	
7. Will the proposed action impact existing: a. public / private water supplies?	✓	
b. public / private wastewater treatment utilities?	✓	
8. Will the proposed action impair the character or quality of important historic, archaeological, architectural or aesthetic resources?	✓	
9. Will the proposed action result in an adverse change to natural resources (e.g., wetlands, waterbodies, groundwater, air quality, flora and fauna)?	✓	
10. Will the proposed action result in an increase in the potential for erosion, flooding or drainage problems?	✓	
11. Will the proposed action create a hazard to environmental resources or human health?	✓	

PRINT FORM

Agency Use Only [If applicable]

Project:

Date:

Short Environmental Assessment Form
Part 3 Determination of Significance

For every question in Part 2 that was answered "moderate to large impact may occur", or if there is a need to explain why a particular element of the proposed action may or will not result in a significant adverse environmental impact, please complete Part 3. Part 3 should, in sufficient detail, identify the impact, including any measures or design elements that have been included by the project sponsor to avoid or reduce impacts. Part 3 should also explain how the lead agency determined that the impact may or will not be significant. Each potential impact should be assessed considering its setting, probability of occurring, duration, irreversibility, geographic scope and magnitude. Also consider the potential for short-term, long-term and cumulative impacts.

☐ Check this box if you have determined, based on the information and analysis above, and any supporting documentation, that the proposed action may result in one or more potentially large or significant adverse impacts and an environmental impact statement is required.

☑ Check this box if you have determined, based on the information and analysis above, and any supporting documentation, that the proposed action will not result in any significant adverse environmental impacts.

Montgomery County Board	2-21-17
Name of Lead Agency	Date
Eric Mead	Commissioner
Print or Type Name of Responsible Officer in Lead Agency	Title of Responsible Officer
Signature of Responsible Officer in Lead Agency	Signature of Preparer (if different from Responsible Officer)

PRINT FORM

Montgomery County
Culvert Replacement Project

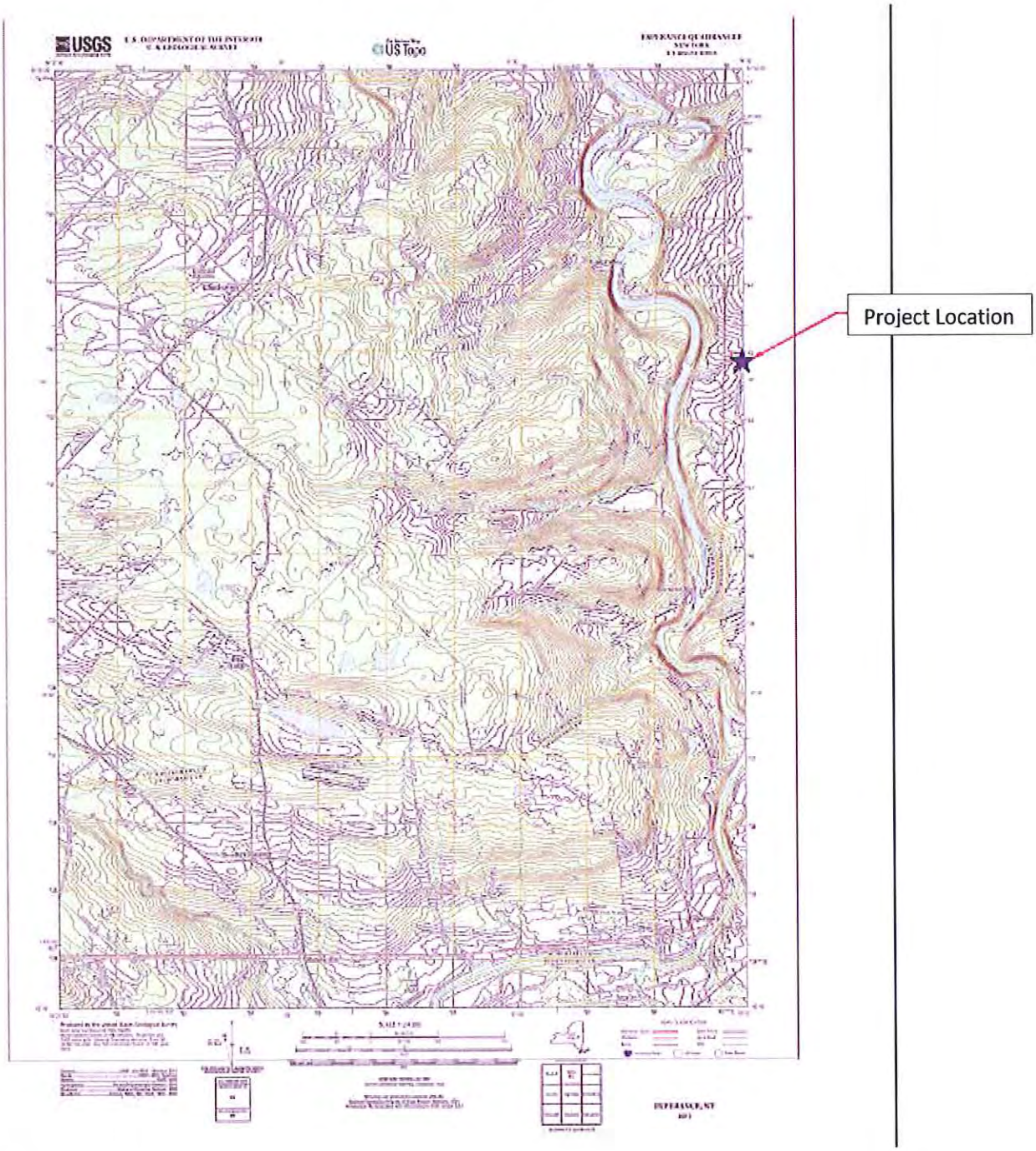

Site Location

Town of Florida, McKinney Road 4B Culvert Replacement

USGS, Esperance Quadrangle

Lat: N42°51'12" Long: W74°15'22"

PERMIT PACKAGE

TOWN OF FLORIDA

PATTERSONVILLE ROAD CULVERT REPLACEMENT

- PERMISSION TO INSPECT PROPERTY – 1 PAGE
- JOINT APPLICATION FORM – 4 PAGES
- SHORT ENVIRONMENTAL ASSESSMENT FORM PART 1 – 3 PAGES
- SHORT ENVIRONMENTAL ASSESSMENT FORM PART 2 – 2 PAGES
- SITE LOCATION, USGS QUADRANGLE – 1 PAGE

NEW YORK STATE OF OPPORTUNITY. | Department of Environmental Conservation

PERMISSION TO INSPECT PROPERTY

By signing this permission form for submission with an application for a permit(s) to the Department of Environmental Conservation ("DEC"), the signer consents to inspection by DEC staff of the project site or facility for which a permit is sought and, to the extent necessary, areas adjacent to the project site or facility. This consent allows DEC staff to enter upon and pass through such property in order to inspect the project site or facility, without prior notice, between the hours of 7:00 a.m. and 7:00 p.m., Monday through Friday. If DEC staff should wish to conduct an inspection at any other times, DEC staff will so notify the applicant and will obtain a separate consent for such an inspection.

Inspections may take place as part of the application review prior to a decision to grant or deny the permit(s) sought. By signing this consent form, the signer agrees that this consent remains in effect as long as the application is pending, and is effective regardless of whether the signer, applicant or an agent is present at the time of the inspection. In the event that the project site or facility is posted with any form of "posted" or "keep out" notices, or fenced in with an unlocked gate, this permission authorizes DEC staff to disregard such notices or unlocked gates at the time of inspection.

The signer further agrees that during an inspection, DEC staff may, among other things, take measurements, may analyze physical characteristics of the site including, but not limited to, soils and vegetation (taking samples for analysis), and may make drawings and take photographs.

Failure to grant consent for an inspection is grounds for, and may result in, denial of the permit(s) sought by the application.

Permission is granted for inspection of property located at the following address(es):

Pattersonville Road approximately 100 feet southeast of the
intersection of Pattersonville Road and Bullshead Road.

*By signing this form, I affirm under penalty of perjury that I am authorized to give consent to entry by DEC staff as described above. I understand that false statements made herein are punishable as a Class A misdemeanor pursuant to Section 210.45 of the Penal Law.**

Eric Mead, Commissioner		2-21-17
Print Name and Title	Signature	Date

*The signer of this form must be an individual or authorized representative of a legal entity that:

- owns fee title and is in possession of the property identified above;
- maintains possessory interest in the property through a lease, rental agreement or other legally binding agreement; or
- is provided permission to act on behalf of an individual or legal entity possessing fee title or other possessory interest in the property for the purpose of consenting to inspection of such property.

NEW YORK STATE | Department of Environmental Conservation | Office of General Services | Department of State

US Army Corps of Engineers

JOINT APPLICATION FORM

For Permits for activities activities affecting streams, waterways, waterbodies, wetlands, coastal areas, sources of water, and endangered and threatened species.

You must separately apply for and obtain Permits from each involved agency before starting work. Please read all instructions.

1. **Applications To:**

>NYS Department of Environmental Conservation ☑ Check here to confirm you sent this form to NYSDEC.

Check all permits that apply:

- ☑ Stream Disturbance
- ☐ Excavation and Fill in Navigable Waters
- ☐ Docks, Moorings or Platforms
- ☐ Dams and Impoundment Structures
- ☐ 401 Water Quality Certification
- ☐ Freshwater Wetlands
- ☐ Tidal Wetlands
- ☐ Wild, Scenic and Recreational Rivers
- ☐ Coastal Erosion Management
- ☐ Water Withdrawal
- ☐ Long Island Well
- ☐ Incidental Take of Endangered / Threatened Species

>US Army Corps of Engineers ☑ Check here to confirm you sent this form to USACE.

Check all permits that apply: ☐ Section 404 Clean Water Act ☐ Section 10 Rivers and Harbors Act

Is the project Federally funded? ☐ Yes ☑ No

If yes, name of Federal Agency:

General Permit Type(s), if known:

Preconstruction Notification: ☐ Yes ☑ No

>NYS Office of General Services ☐ Check here to confirm you sent this form to NYSOGS.

Check all permits that apply:

- ☐ State Owned Lands Under Water
- ☐ Utility Easement (pipelines, conduits, cables, etc.)
- ☐ Docks, Moorings or Platforms

>NYS Department of State ☐ Check here to confirm you sent this form to NYSDOS.

Check if this applies: ☐ Coastal Consistency Concurrence

2. **Name of Applicant**: Montgomery County

Taxpayer ID (if applicant is NOT an individual): 14-6002568

Mailing Address: 6 Park Street

Post Office / City: Fonda

State: NY

Zip: 12068

Telephone: (518) 853-3814

Email: emead@co.montgomery.ny.us

Applicant Must be (check all that apply): ☑ Owner ☑ Operator ☐ Lessee

3. **Name of Property Owner (if different than Applicant)**

Mailing Address

Post Office / City

State

Zip

Telephone

Email

For Agency Use Only	Agency Application Number:

4. Name of Contact / Agent

A. Thomas Bates, PE

Mailing Address	Post Office / City	State	Zip
7 South Church Street	Schenectady	NY	12305

Telephone (518) 382-1774 Email tbates@primeeng.com

5. Project / Facility Name

Pattersonville Road Culvert Replacement

Property Tax Map Section / Block / Lot Number: N/A

Project Street Address, if applicable	Post Office / City	State	Zip
Pattersonville Road	Amsterdam	NY	12010

Provide directions and distances to roads, intersections, bridges and bodies of water

Located in the Town of Florida approximately 100 feet southeast of the intersection of Pattersonville Road and Bullshead Road

☑ Town ☐ Village ☐ City

County	Stream/Waterbody Name
Florida	Montgomery	tributary to Mohawk River

Project Location Coordinates: Enter Latitude and Longitude in degrees, minutes, seconds:

Latitude: N42 ° 53 ' 53 " Longitude: W74 ° 07 ' 48 "

6. Project Description: Provide the following information about your project. Continue each response and provide any additional information on other pages. **Attach plans on separate pages.**

a. Purpose of the proposed project:

This project involves the replacement of an existing culvert under Pattersonville Road that allows a tributary to the Mohawk River to flow beneath the roadway. All work will be completed as per the plans submitted with the application entitled "Montgomery County, Montgomery County Culvert Replacement, Contract No. 1 - Town of Amsterdam, Contract No. 2 - Town of Florida" by John M. McDonald Engineering.

b. Description of current site conditions:

c. Proposed site changes:

d. Type of structures and fill materials to be installed, and quantity of materials to be used (e.g., square feet of coverage, cubic yards of fill material, structures below ordinary/mean high water, etc.):

e. Area of excavation or dredging, volume of material to be removed, location of dredged material placement:

f. Is tree cutting or clearing proposed? ☐ Yes If Yes, explain below. ☑ No

Timing of the proposed cutting or clearing (month/year):

Number of trees to be cut: Acreage of trees to be cleared:

g. Work methods and type of equipment to be used:

h. Describe the planned sequence of activities:

i. Pollution control methods and other actions proposed to mitigate environmental impacts:

j. Erosion and silt control methods that will be used to prevent water quality impacts:

Silt fence

k. Alternatives considered to avoid regulated areas. If no feasible alternatives exist, explain how the project will minimize impacts:

l. Proposed use: ☐ Private ☑ Public ☐ Commercial

m. Proposed Start Date: October 2016 Estimated Completion Date: November 2016

n. Has work begun on project? ☐ Yes If Yes, explain below. ☑ No

o. Will project occupy Federal, State, or Municipal Land? ☑ Yes If Yes, explain below. ☐ No

The Town of Florida owns the Pattersonville Road right-of-way

p. List any previous DEC, USACE, OGS or DOS Permit / Application numbers for activities at this location:

N/A

q. Will this project require additional Federal, State, or Local authorizations, including zoning changes?

☑ Yes If Yes, list below. ☐ No

NYS DEC & USACE Joint Application for Permit

7. **Signatures.**

Applicant and Owner (If different) must sign the application.
Append additional pages of this Signature section if there are multiple Applicants, Owners or Contact/Agents.

I hereby affirm that information provided on this form and all attachments submitted herewith is true to the best of my knowledge and belief.

Permission to Inspect - I hereby consent to Agency inspection of the project site and adjacent property areas. Agency staff may enter the property without notice between 7:00 am and 7:00 pm, Monday - Friday. Inspection may occur without the owner, applicant or agent present. If the property is posted with "keep out" signs or fenced with an unlocked gate, Agency staff may still enter the property. Agency staff may take measurements, analyze site physical characteristics, take soil and vegetation samples, sketch and photograph the site. I understand that failure to give this consent may result in denial of the permit(s) sought by this application.

False statements made herein are punishable as a Class A misdemeanor pursuant to Section 210.45 of the NYS Penal Law. Further, the applicant accepts full responsibility for all damage, direct or indirect, of whatever nature, and by whomever suffered, arising out of the project described herein and agrees to indemnify and save harmless the State from suits, actions, damages and costs of every name and description resulting from said project. In addition, Federal Law, 18 U.S.C., Section 1001 provides for a fine of not more than $10,000 or imprisonment for not more than 5 years, or both where an applicant knowingly and willingly falsifies, conceals, or covers up a material fact; or knowingly makes or uses a false, fictitious or fraudulent statement.

Signature of Applicant | Date: 2-21-17

Applicant Must be (check all that apply): ☑ Owner ☑ Operator ☐ Lessee

Printed Name: Eric Mead | Title: Commissioner

Signature of Owner (if different than Applicant) | Date:

Printed Name: | Title:

Signature of Contact / Agent | Date: 2/24/17

Printed Name: A. Thomas Bates, PE | Title: Project Engineer

For Agency Use Only **DETERMINATION OF NO PERMIT REQUIRED**

Agency Application Number

(Agency Name) has determined that No Permit is required from this Agency for the project described in this application.

Agency Representative:

Printed Name | Title

Signature | Date

Short Environmental Assessment Form
Part 1 - Project Information

Instructions for Completing

Part 1 - Project Information. The applicant or project sponsor is responsible for the completion of Part 1. Responses become part of the application for approval or funding, are subject to public review, and may be subject to further verification. Complete Part 1 based on information currently available. If additional research or investigation would be needed to fully respond to any item, please answer as thoroughly as possible based on current information.

Complete all items in Part 1. You may also provide any additional information which you believe will be needed by or useful to the lead agency; attach additional pages as necessary to supplement any item.

Part 1 - Project and Sponsor Information

Name of Action or Project:
Pattersonville Road Culvert Replacement

Project Location (describe, and attach a location map):
Pattersonville Road, Montgomery County, Florida, New York

Brief Description of Proposed Action:
Replacement of an existing culvert pipe within the Pattersonville Road right-of-way that allows a tributary to the Mohawk River to flow beneath the roadway. The existing culvert pipe is undersized.

Project will replace the existing 60" CMP culvert with a 96"x84" box culvert.

Name of Applicant or Sponsor:	Telephone: (518) 853-3814
Montgomery County	E-Mail: emead@co.montgomery.ny.us

Address:
6 Park Street

City/PO:	State:	Zip Code:
Fonda	NY	12068

	NO	YES
1. Does the proposed action only involve the legislative adoption of a plan, local law, ordinance, administrative rule, or regulation? If Yes, attach a narrative description of the intent of the proposed action and the environmental resources that may be affected in the municipality and proceed to Part 2. If no, continue to question 2.	☑	☐
2. Does the proposed action require a permit, approval or funding from any other governmental Agency? If Yes, list agency(s) name and permit or approval: NYS DEC & USACE Joint Application for Permit	☐	☑

3.a. Total acreage of the site of the proposed action? <1 acres
b. Total acreage to be physically disturbed? <1 acres
c. Total acreage (project site and any contiguous properties) owned or controlled by the applicant or project sponsor? <1 acres

4. Check all land uses that occur on, adjoining and near the proposed action.
☐ Urban ☑ Rural (non-agriculture) ☐ Industrial ☐ Commercial ☑ Residential (suburban)
☐ Forest ☑ Agriculture ☐ Aquatic ☐ Other (specify): _____
☐ Parkland

	NO	YES	N/A
5. Is the proposed action,			
a. A permitted use under the zoning regulations?	☐	☑	☐
b. Consistent with the adopted comprehensive plan?	☐	☑	☐

	NO	YES
6. Is the proposed action consistent with the predominant character of the existing built or natural landscape?	☐	☑
7. Is the site of the proposed action located in, or does it adjoin, a state listed Critical Environmental Area? If Yes, identify: _____	☑	☐
8. a. Will the proposed action result in a substantial increase in traffic above present levels?	☑	☐
b. Are public transportation service(s) available at or near the site of the proposed action?	☑	☐
c. Are any pedestrian accommodations or bicycle routes available on or near site of the proposed action?	☑	☐
9. Does the proposed action meet or exceed the state energy code requirements? If the proposed action will exceed requirements, describe design features and technologies: _____	☑	☐
10. Will the proposed action connect to an existing public/private water supply? If No, describe method for providing potable water: _____	☑	☐
11. Will the proposed action connect to existing wastewater utilities? If No, describe method for providing wastewater treatment: _____	☑	☐
12. a. Does the site contain a structure that is listed on either the State or National Register of Historic Places?	☑	☐
b. Is the proposed action located in an archeological sensitive area?	☑	☐
13. a. Does any portion of the site of the proposed action, or lands adjoining the proposed action, contain wetlands or other waterbodies regulated by a federal, state or local agency?	☐	☑
b. Would the proposed action physically alter, or encroach into, any existing wetland or waterbody? If Yes, identify the wetland or waterbody and extent of alterations in square feet or acres: _____	☑	☐
14. Identify the typical habitat types that occur on, or are likely to be found on the project site. Check all that apply: ☐ Shoreline ☐ Forest ☑ Agricultural/grasslands ☐ Early mid-successional ☐ Wetland ☐ Urban ☑ Suburban		
15. Does the site of the proposed action contain any species of animal, or associated habitats, listed by the State or Federal government as threatened or endangered?	☑	☐
16. Is the project site located in the 100 year flood plain?	☑	☐
17. Will the proposed action create storm water discharge, either from point or non-point sources? If Yes, a. Will storm water discharges flow to adjacent properties? ☐ NO ☐ YES	☑	☐
b. Will storm water discharges be directed to established conveyance systems (runoff and storm drains)? If Yes, briefly describe: ☐ NO ☐ YES _____		

	NO	YES
18. Does the proposed action include construction or other activities that result in the impoundment of water or other liquids (e.g. retention pond, waste lagoon, dam)? If Yes, explain purpose and size:	✓	
19. Has the site of the proposed action or an adjoining property been the location of an active or closed solid waste management facility? If Yes, describe:	✓	
20. Has the site of the proposed action or an adjoining property been the subject of remediation (ongoing or completed) for hazardous waste? If Yes, describe:	✓	

I AFFIRM THAT THE INFORMATION PROVIDED ABOVE IS TRUE AND ACCURATE TO THE BEST OF MY KNOWLEDGE

Applicant/sponsor name: Montgomery County Date: 2-21-17

Signature:

PRINT FORM

Agency Use Only [If applicable]	
Project:	
Date:	

Short Environmental Assessment Form
Part 2 - Impact Assessment

Part 2 is to be completed by the Lead Agency.
Answer all of the following questions in Part 2 using the information contained in Part 1 and other materials submitted by the project sponsor or otherwise available to the reviewer. When answering the questions the reviewer should be guided by the concept "Have my responses been reasonable considering the scale and context of the proposed action?"

	No, or small impact may occur	Moderate to large impact may occur
1. Will the proposed action create a material conflict with an adopted land use plan or zoning regulations?	☑	☐
2. Will the proposed action result in a change in the use or intensity of use of land?	☑	☐
3. Will the proposed action impair the character or quality of the existing community?	☑	☐
4. Will the proposed action have an impact on the environmental characteristics that caused the establishment of a Critical Environmental Area (CEA)?	☑	☐
5. Will the proposed action result in an adverse change in the existing level of traffic or affect existing infrastructure for mass transit, biking or walkway?	☑	☐
6. Will the proposed action cause an increase in the use of energy and it fails to incorporate reasonably available energy conservation or renewable energy opportunities?	☑	☐
7. Will the proposed action impact existing: a. public / private water supplies?	☑	☐
b. public / private wastewater treatment utilities?	☑	☐
8. Will the proposed action impair the character or quality of important historic, archaeological, architectural or aesthetic resources?	☑	☐
9. Will the proposed action result in an adverse change to natural resources (e.g., wetlands, waterbodies, groundwater, air quality, flora and fauna)?	☑	☐
10. Will the proposed action result in an increase in the potential for erosion, flooding or drainage problems?	☑	☐
11. Will the proposed action create a hazard to environmental resources or human health?	☑	☐

PRINT FORM

Agency Use Only [If applicable]

Project:

Date:

Short Environmental Assessment Form
Part 3 Determination of Significance

For every question in Part 2 that was answered "moderate to large impact may occur", or if there is a need to explain why a particular element of the proposed action may or will not result in a significant adverse environmental impact, please complete Part 3. Part 3 should, in sufficient detail, identify the impact, including any measures or design elements that have been included by the project sponsor to avoid or reduce impacts. Part 3 should also explain how the lead agency determined that the impact may or will not be significant. Each potential impact should be assessed considering its setting, probability of occurring, duration, irreversibility, geographic scope and magnitude. Also consider the potential for short-term, long-term and cumulative impacts.

☐ Check this box if you have determined, based on the information and analysis above, and any supporting documentation, that the proposed action may result in one or more potentially large or significant adverse impacts and an environmental impact statement is required.

☑ Check this box if you have determined, based on the information and analysis above, and any supporting documentation, that the proposed action will not result in any significant adverse environmental impacts.

Montgomery County Board	2-21-17
Name of Lead Agency	Date
Eric Mead	Commissioner
Print or Type Name of Responsible Officer in Lead Agency	Title of Responsible Officer
Signature of Responsible Officer in Lead Agency	Signature of Preparer (if different from Responsible Officer)

PRINT FORM

Montgomery County
Culvert Replacement Project

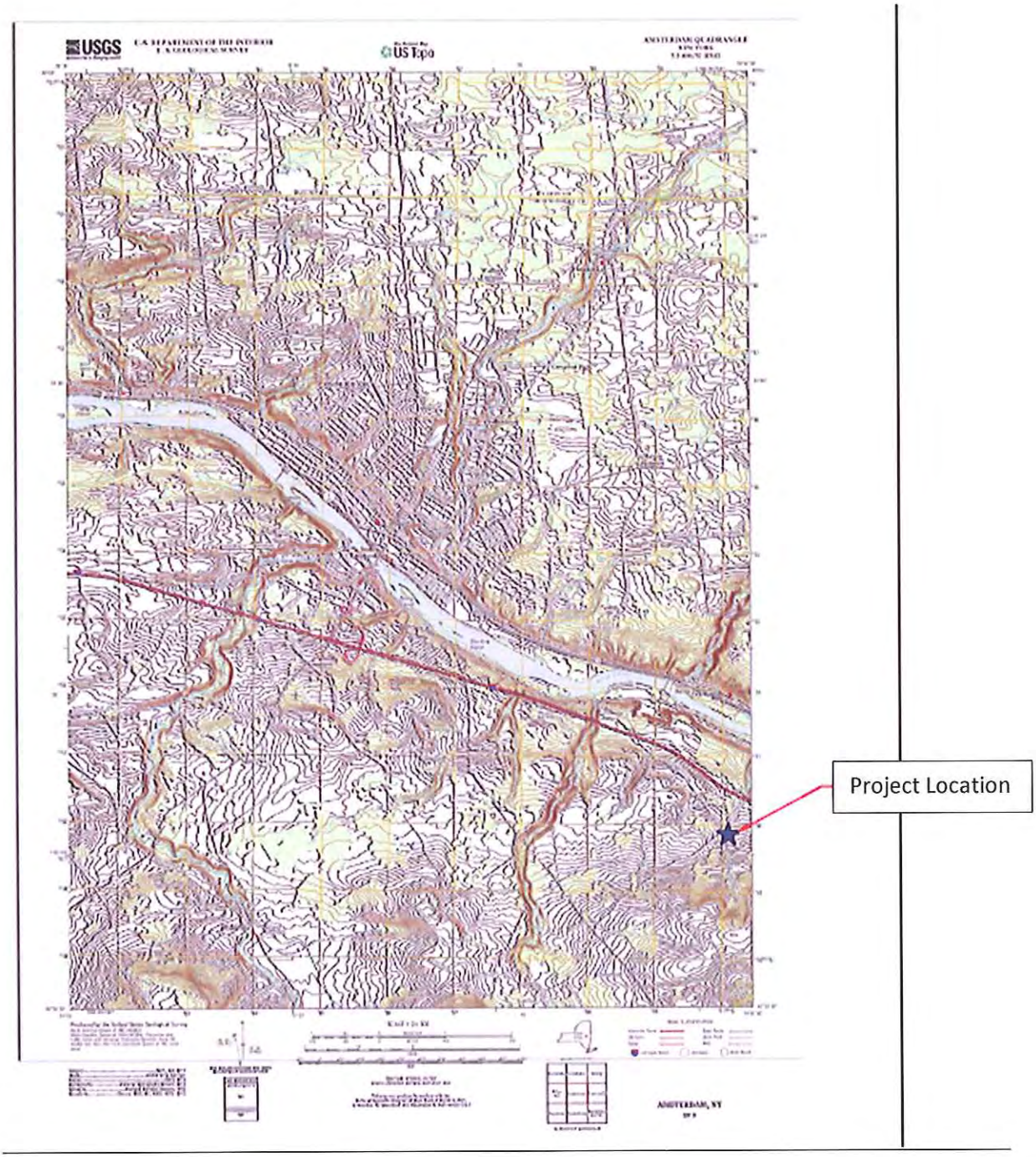

Site Location

Town of Florida, Pattersonville Road Culvert Replacement

USGS, Amsterdam Quadrangle

Lat: N42°58'28" Long: W74°12'39"

PERMIT PACKAGE

TOWN OF FLORIDA
SHELLSTONE ROAD CULVERT REPLACEMENT

- PERMISSION TO INSPECT PROPERTY – 1 PAGE
- JOINT APPLICATION FORM – 4 PAGES
- SHORT ENVIRONMENTAL ASSESSMENT FORM PART 1 – 3 PAGES
- SHORT ENVIRONMENTAL ASSESSMENT FORM PART 2 – 2 PAGES
- SITE LOCATION, USGS QUADRANGLE – 1 PAGE

NEW YORK STATE OF OPPORTUNITY. | Department of Environmental Conservation

PERMISSION TO INSPECT PROPERTY

By signing this permission form for submission with an application for a permit(s) to the Department of Environmental Conservation ("DEC"), the signer consents to inspection by DEC staff of the project site or facility for which a permit is sought and, to the extent necessary, areas adjacent to the project site or facility. This consent allows DEC staff to enter upon and pass through such property in order to inspect the project site or facility, without prior notice, between the hours of 7:00 a.m. and 7:00 p.m., Monday through Friday. If DEC staff should wish to conduct an inspection at any other times, DEC staff will so notify the applicant and will obtain a separate consent for such an inspection.

Inspections may take place as part of the application review prior to a decision to grant or deny the permit(s) sought. By signing this consent form, the signer agrees that this consent remains in effect as long as the application is pending, and is effective regardless of whether the signer, applicant or an agent is present at the time of the inspection. In the event that the project site or facility is posted with any form of "posted" or "keep out" notices, or fenced in with an unlocked gate, this permission authorizes DEC staff to disregard such notices or unlocked gates at the time of inspection.

The signer further agrees that during an inspection, DEC staff may, among other things, take measurements, may analyze physical characteristics of the site including, but not limited to, soils and vegetation (taking samples for analysis), and may make drawings and take photographs.

Failure to grant consent for an inspection is grounds for, and may result in, denial of the permit(s) sought by the application.

Permission is granted for inspection of property located at the following address(es):

Shellstone Road approximately 150 feet west of the
intersection of Shellstone Road and Route 30

*By signing this form, I affirm under penalty of perjury that I am authorized to give consent to entry by DEC staff as described above. I understand that false statements made herein are punishable as a Class A misdemeanor pursuant to Section 210.45 of the Penal Law.**

Eric Mead, Commissioner		2-21-17
Print Name and Title	Signature	Date

*The signer of this form must be an individual or authorized representative of a legal entity that:

- owns fee title and is in possession of the property identified above;
- maintains possessory interest in the property through a lease, rental agreement or other legally binding agreement; or
- is provided permission to act on behalf of an individual or legal entity possessing fee title or other possessory interest in the property for the purpose of consenting to inspection of such property.

NEW YORK STATE | Department of Environmental Conservation | Office of General Services | Department of State

US Army Corps of Engineers

JOINT APPLICATION FORM

For Permits for activities activities affecting streams, waterways, waterbodies, wetlands, coastal areas, sources of water, and endangered and threatened species.

You must separately apply for and obtain Permits from each involved agency before starting work. Please read all instructions.

1. **Applications To:**

>NYS Department of Environmental Conservation ☑ Check here to confirm you sent this form to NYSDEC.

Check all permits that apply:

- ☑ Stream Disturbance
- ☐ Excavation and Fill in Navigable Waters
- ☐ Docks, Moorings or Platforms
- ☐ Dams and Impoundment Structures
- ☐ 401 Water Quality Certification
- ☐ Freshwater Wetlands
- ☐ Tidal Wetlands
- ☐ Wild, Scenic and Recreational Rivers
- ☐ Coastal Erosion Management
- ☐ Water Withdrawal
- ☐ Long Island Well
- ☐ Incidental Take of Endangered / Threatened Species

>US Army Corps of Engineers ☑ Check here to confirm you sent this form to USACE.

Check all permits that apply: ☐ Section 404 Clean Water Act ☐ Section 10 Rivers and Harbors Act

Is the project Federally funded? ☐ Yes ☑ No

If yes, name of Federal Agency:

General Permit Type(s), if known:

Preconstruction Notification: ☐ Yes ☑ No

>NYS Office of General Services ☐ Check here to confirm you sent this form to NYSOGS.

Check all permits that apply:

- ☐ State Owned Lands Under Water
- ☐ Utility Easement (pipelines, conduits, cables, etc.)
- ☐ Docks, Moorings or Platforms

>NYS Department of State ☐ Check here to confirm you sent this form to NYSDOS.

Check if this applies: ☐ Coastal Consistency Concurrence

2. **Name of Applicant**

Montgomery County

Taxpayer ID (if applicant is NOT an individual): 14-6002568

Mailing Address: 6 Park Street

Post Office / City: Fonda

State: NY

Zip: 12068

Telephone: (518) 853-3814

Email: emead@co.montgomery.ny.us

Applicant Must be (check all that apply): ☑ Owner ☑ Operator ☐ Lessee

3. **Name of Property Owner (if different than Applicant)**

Mailing Address

Post Office / City

State

Zip

Telephone

Email

For Agency Use Only	Agency Application Number:

4. Name of Contact / Agent

A. Thomas Bates, PE

Mailing Address	Post Office / City	State	Zip
7 South Church Street	Schenectady	NY	12305

Telephone (518) 382-1774 Email tbates@primeeng.com

5. Project / Facility Name

Shellstone Road Culvert Replacement

Property Tax Map Section / Block / Lot Number: N/A

Project Street Address, if applicable	Post Office / City	State	Zip
Shellstone Road	Amsterdam	NY	12010

Provide directions and distances to roads, intersections, bridges and bodies of water

Located in the Town of Florida approximately 150 feet west of the intersection of Shellstone Road and Route 30

☑ Town ☐ Village ☐ City

County	Stream/Waterbody Name
Montgomery	tributary to South Chuctanunda Creek

Project Location Coordinates: Enter Latitude and Longitude in degrees, minutes, seconds:

Latitude: N42 ° 51 ' 51 " Longitude: W74 ° 12 ' 16 "

6. Project Description: Provide the following information about your project. Continue each response and provide any additional information on other pages. **Attach plans on separate pages.**

a. Purpose of the proposed project:

This project involves the replacement of an existing culvert under Shellstone Road that allows a tributary to South Chuctanunda Creek to flow beneath the roadway. All work will be completed as per the plans submitted with the application entitled "Montgomery County, Montgomery County Culvert Replacement, Contract No. 1 - Town of Amsterdam, Contract No. 2 - Town of Florida" by John M. McDonald Engineering.

b. Description of current site conditions:

c. Proposed site changes:

d. Type of structures and fill materials to be installed, and quantity of materials to be used (e.g., square feet of coverage, cubic yards of fill material, structures below ordinary/mean high water, etc.):

e. Area of excavation or dredging, volume of material to be removed, location of dredged material placement:

f. Is tree cutting or clearing proposed? ☐ Yes If Yes, explain below. ☑ No

Timing of the proposed cutting or clearing (month/year):

Number of trees to be cut: Acreage of trees to be cleared:

g. Work methods and type of equipment to be used:

h. Describe the planned sequence of activities:

i. Pollution control methods and other actions proposed to mitigate environmental impacts:

j. Erosion and silt control methods that will be used to prevent water quality impacts:

Silt fence

k. Alternatives considered to avoid regulated areas. If no feasible alternatives exist, explain how the project will minimize impacts:

l. Proposed use: ☐ Private ☑ Public ☐ Commercial

m. Proposed Start Date: October 2016 Estimated Completion Date: November 2016

n. Has work begun on project? ☐ Yes If Yes, explain below. ☑ No

o. Will project occupy Federal, State, or Municipal Land? ☑ Yes If Yes, explain below. ☐ No

The Town of Florida owns the Shellstone Road right-of-way

p. List any previous DEC, USACE, OGS or DOS Permit / Application numbers for activities at this location:

N/A

q. Will this project require additional Federal, State, or Local authorizations, including zoning changes?

☑ Yes If Yes, list below. ☐ No

NYS DEC & USACE Joint Application for Permit

7. **Signatures.**
Applicant and Owner (If different) must sign the application.
Append additional pages of this Signature section if there are multiple Applicants, Owners or Contact/Agents.

I hereby affirm that information provided on this form and all attachments submitted herewith is true to the best of my knowledge and belief.

Permission to Inspect - I hereby consent to Agency inspection of the project site and adjacent property areas. Agency staff may enter the property without notice between 7:00 am and 7:00 pm, Monday - Friday. Inspection may occur without the owner, applicant or agent present. If the property is posted with "keep out" signs or fenced with an unlocked gate, Agency staff may still enter the property. Agency staff may take measurements, analyze site physical characteristics, take soil and vegetation samples, sketch and photograph the site. I understand that failure to give this consent may result in denial of the permit(s) sought by this application.

False statements made herein are punishable as a Class A misdemeanor pursuant to Section 210.45 of the NYS Penal Law. Further, the applicant accepts full responsibility for all damage, direct or indirect, of whatever nature, and by whomever suffered, arising out of the project described herein and agrees to indemnify and save harmless the State from suits, actions, damages and costs of every name and description resulting from said project. In addition, Federal Law, 18 U.S.C., Section 1001 provides for a fine of not more than $10,000 or imprisonment for not more than 5 years, or both where an applicant knowingly and willingly falsifies, conceals, or covers up a material fact; or knowingly makes or uses a false, fictitious or fraudulent statement.

Signature of Applicant | Date: 2-21-17

Applicant Must be (check all that apply): ☑ Owner ☑ Operator ☐ Lessee

Printed Name: Eric Mead | Title: Commissioner

Signature of Owner (if different than Applicant) | Date:

Printed Name: | Title:

Signature of Contact / Agent | Date: 2/24/17

Printed Name: A. Thomas Bates, PE | Title: Project Engineer

For Agency Use Only **DETERMINATION OF NO PERMIT REQUIRED**

Agency Application Number

(Agency Name) has determined that No Permit is required from this Agency for the project described in this application.

Agency Representative:

Printed Name | Title

Signature | Date

Short Environmental Assessment Form
Part 1 - Project Information

Instructions for Completing

Part 1 - Project Information. The applicant or project sponsor is responsible for the completion of Part 1. Responses become part of the application for approval or funding, are subject to public review, and may be subject to further verification. Complete Part 1 based on information currently available. If additional research or investigation would be needed to fully respond to any item, please answer as thoroughly as possible based on current information.

Complete all items in Part 1. You may also provide any additional information which you believe will be needed by or useful to the lead agency; attach additional pages as necessary to supplement any item.

Part 1 - Project and Sponsor Information

Name of Action or Project:
Shellstone Road Culvert Replacement

Project Location (describe, and attach a location map):
Shellstone Road, Montgomery County, Florida, New York

Brief Description of Proposed Action:
Replacement of an existing box culvert within the Shellstone Road right-of-way that allows a tributary to South Chuctanunda Creek to flow beneath the roadway. The existing culvert is undersized.

Project will replace the existing 114"x82" box culvert with a 144" x 84" box culvert.

Name of Applicant or Sponsor:	Telephone: (518) 853-3814
Montgomery County	E-Mail: emead@co.montgomery.ny.us

Address:
6 Park Street

City/PO:	State:	Zip Code:
Fonda	NY	12068

	NO	YES
1. Does the proposed action only involve the legislative adoption of a plan, local law, ordinance, administrative rule, or regulation? If Yes, attach a narrative description of the intent of the proposed action and the environmental resources that may be affected in the municipality and proceed to Part 2. If no, continue to question 2.	☑	☐
2. Does the proposed action require a permit, approval or funding from any other governmental Agency? If Yes, list agency(s) name and permit or approval: NYS DEC & USACE Joint Application for Permit	☐	☑

3.a. Total acreage of the site of the proposed action? <1 acres
b. Total acreage to be physically disturbed? <1 acres
c. Total acreage (project site and any contiguous properties) owned or controlled by the applicant or project sponsor? <1 acres

4. Check all land uses that occur on, adjoining and near the proposed action.
☐ Urban ☑ Rural (non-agriculture) ☐ Industrial ☐ Commercial ☑ Residential (suburban)
☐ Forest ☑ Agriculture ☐ Aquatic ☐ Other (specify): _____
☐ Parkland

	NO	YES	N/A
5. Is the proposed action,			
a. A permitted use under the zoning regulations?	☐	✓	☐
b. Consistent with the adopted comprehensive plan?	☐	✓	☐

	NO	YES
6. Is the proposed action consistent with the predominant character of the existing built or natural landscape?	☐	✓
7. Is the site of the proposed action located in, or does it adjoin, a state listed Critical Environmental Area? If Yes, identify: _____	✓	☐
8. a. Will the proposed action result in a substantial increase in traffic above present levels?	✓	☐
b. Are public transportation service(s) available at or near the site of the proposed action?	✓	☐
c. Are any pedestrian accommodations or bicycle routes available on or near site of the proposed action?	✓	☐
9. Does the proposed action meet or exceed the state energy code requirements? If the proposed action will exceed requirements, describe design features and technologies: _____	✓	☐
10. Will the proposed action connect to an existing public/private water supply? If No, describe method for providing potable water: _____	✓	☐
11. Will the proposed action connect to existing wastewater utilities? If No, describe method for providing wastewater treatment: _____	✓	☐
12. a. Does the site contain a structure that is listed on either the State or National Register of Historic Places?	✓	☐
b. Is the proposed action located in an archeological sensitive area?	✓	☐
13. a. Does any portion of the site of the proposed action, or lands adjoining the proposed action, contain wetlands or other waterbodies regulated by a federal, state or local agency?	☐	✓
b. Would the proposed action physically alter, or encroach into, any existing wetland or waterbody? If Yes, identify the wetland or waterbody and extent of alterations in square feet or acres: _____	✓	☐
14. Identify the typical habitat types that occur on, or are likely to be found on the project site. Check all that apply: ☐ Shoreline ☐ Forest ☑ Agricultural/grasslands ☐ Early mid-successional ☐ Wetland ☐ Urban ☑ Suburban		
15. Does the site of the proposed action contain any species of animal, or associated habitats, listed by the State or Federal government as threatened or endangered?	✓	☐
16. Is the project site located in the 100 year flood plain?	✓	☐
17. Will the proposed action create storm water discharge, either from point or non-point sources? If Yes, a. Will storm water discharges flow to adjacent properties? ☐ NO ☐ YES	✓	☐
b. Will storm water discharges be directed to established conveyance systems (runoff and storm drains)? If Yes, briefly describe: ☐ NO ☐ YES _____		

	NO	YES
18. Does the proposed action include construction or other activities that result in the impoundment of water or other liquids (e.g. retention pond, waste lagoon, dam)? If Yes, explain purpose and size:	✓	
19. Has the site of the proposed action or an adjoining property been the location of an active or closed solid waste management facility? If Yes, describe:	✓	
20. Has the site of the proposed action or an adjoining property been the subject of remediation (ongoing or completed) for hazardous waste? If Yes, describe:	✓	

I AFFIRM THAT THE INFORMATION PROVIDED ABOVE IS TRUE AND ACCURATE TO THE BEST OF MY KNOWLEDGE

Applicant/sponsor name: Montgomery County Date: 3-21-17

Signature:

PRINT FORM

Agency Use Only [If applicable]	
Project:	
Date:	

Short Environmental Assessment Form
Part 2 - Impact Assessment

Part 2 is to be completed by the Lead Agency.
Answer all of the following questions in Part 2 using the information contained in Part 1 and other materials submitted by the project sponsor or otherwise available to the reviewer. When answering the questions the reviewer should be guided by the concept "Have my responses been reasonable considering the scale and context of the proposed action?"

	No, or small impact may occur	Moderate to large impact may occur
1. Will the proposed action create a material conflict with an adopted land use plan or zoning regulations?	☑	☐
2. Will the proposed action result in a change in the use or intensity of use of land?	☑	☐
3. Will the proposed action impair the character or quality of the existing community?	☑	☐
4. Will the proposed action have an impact on the environmental characteristics that caused the establishment of a Critical Environmental Area (CEA)?	☑	☐
5. Will the proposed action result in an adverse change in the existing level of traffic or affect existing infrastructure for mass transit, biking or walkway?	☑	☐
6. Will the proposed action cause an increase in the use of energy and it fails to incorporate reasonably available energy conservation or renewable energy opportunities?	☑	☐
7. Will the proposed action impact existing: a. public / private water supplies?	☑	☐
b. public / private wastewater treatment utilities?	☑	☐
8. Will the proposed action impair the character or quality of important historic, archaeological, architectural or aesthetic resources?	☑	☐
9. Will the proposed action result in an adverse change to natural resources (e.g., wetlands, waterbodies, groundwater, air quality, flora and fauna)?	☑	☐
10. Will the proposed action result in an increase in the potential for erosion, flooding or drainage problems?	☑	☐
11. Will the proposed action create a hazard to environmental resources or human health?	☑	☐

PRINT FORM

Agency Use Only [If applicable]

Project:

Date:

Short Environmental Assessment Form
Part 3 Determination of Significance

For every question in Part 2 that was answered "moderate to large impact may occur", or if there is a need to explain why a particular element of the proposed action may or will not result in a significant adverse environmental impact, please complete Part 3. Part 3 should, in sufficient detail, identify the impact, including any measures or design elements that have been included by the project sponsor to avoid or reduce impacts. Part 3 should also explain how the lead agency determined that the impact may or will not be significant. Each potential impact should be assessed considering its setting, probability of occurring, duration, irreversibility, geographic scope and magnitude. Also consider the potential for short-term, long-term and cumulative impacts.

☐ Check this box if you have determined, based on the information and analysis above, and any supporting documentation, that the proposed action may result in one or more potentially large or significant adverse impacts and an environmental impact statement is required.

☑ Check this box if you have determined, based on the information and analysis above, and any supporting documentation, that the proposed action will not result in any significant adverse environmental impacts.

Montgomery County Board	2-21-17
Name of Lead Agency	Date
Eric Mead	Commissioner
Print or Type Name of Responsible Officer in Lead Agency	Title of Responsible Officer
Signature of Responsible Officer in Lead Agency	Signature of Preparer (if different from Responsible Officer)

PRINT FORM

Montgomery County
Culvert Replacement Project

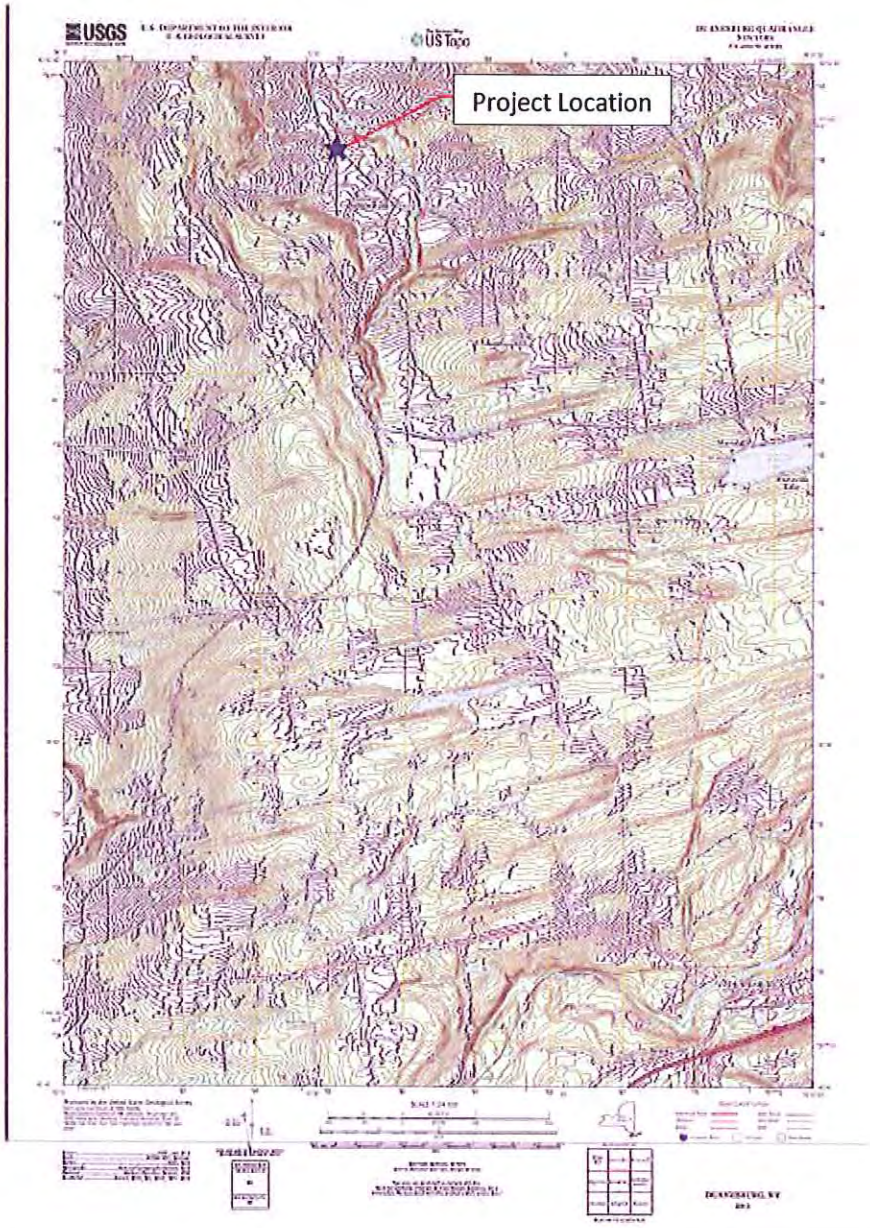

Site Location

Town of Florida, Shellstone Road Culvert Replacement

USGS, Duanesburg Quadrangle

Lat: N42°51'51" Long: W74°12'16"

PERMIT PACKAGE

TOWN OF FLORIDA
STREVY LANE CULVERT REPLACEMENT

- PERMISSION TO INSPECT PROPERTY – 1 PAGE
- JOINT APPLICATION FORM – 4 PAGES
- SHORT ENVIRONMENTAL ASSESSMENT FORM PART 1 – 3 PAGES
- SHORT ENVIRONMENTAL ASSESSMENT FORM PART 2 – 2 PAGES
- SITE LOCATION, USGS QUADRANGLE – 1 PAGE

NEW YORK STATE OF OPPORTUNITY. | Department of Environmental Conservation

PERMISSION TO INSPECT PROPERTY

By signing this permission form for submission with an application for a permit(s) to the Department of Environmental Conservation ("DEC"), the signer consents to inspection by DEC staff of the project site or facility for which a permit is sought and, to the extent necessary, areas adjacent to the project site or facility. This consent allows DEC staff to enter upon and pass through such property in order to inspect the project site or facility, without prior notice, between the hours of 7:00 a.m. and 7:00 p.m., Monday through Friday. If DEC staff should wish to conduct an inspection at any other times, DEC staff will so notify the applicant and will obtain a separate consent for such an inspection.

Inspections may take place as part of the application review prior to a decision to grant or deny the permit(s) sought. By signing this consent form, the signer agrees that this consent remains in effect as long as the application is pending, and is effective regardless of whether the signer, applicant or an agent is present at the time of the inspection. In the event that the project site or facility is posted with any form of "posted" or "keep out" notices, or fenced in with an unlocked gate, this permission authorizes DEC staff to disregard such notices or unlocked gates at the time of inspection.

The signer further agrees that during an inspection, DEC staff may, among other things, take measurements, may analyze physical characteristics of the site including, but not limited to, soils and vegetation (taking samples for analysis), and may make drawings and take photographs.

Failure to grant consent for an inspection is grounds for, and may result in, denial of the permit(s) sought by the application.

Permission is granted for inspection of property located at the following address(es):

Strevy Lane approximately 350 feet south of the intersection
of Strevy Lane and Route 5s

*By signing this form, I affirm under penalty of perjury that I am authorized to give consent to entry by DEC staff as described above. I understand that false statements made herein are punishable as a Class A misdemeanor pursuant to Section 210.45 of the Penal Law.**

Eric Mead, Commissioner		2-21-17
Print Name and Title	Signature	Date

*The signer of this form must be an individual or authorized representative of a legal entity that:

- owns fee title and is in possession of the property identified above;
- maintains possessory interest in the property through a lease, rental agreement or other legally binding agreement; or
- is provided permission to act on behalf of an individual or legal entity possessing fee title or other possessory interest in the property for the purpose of consenting to inspection of such property.

NEW YORK STATE | Department of Environmental Conservation | Office of General Services | Department of State

US Army Corps of Engineers

JOINT APPLICATION FORM

For Permits for activities activities affecting streams, waterways, waterbodies, wetlands, coastal areas, sources of water, and endangered and threatened species.

You must separately apply for and obtain Permits from each involved agency before starting work. Please read all instructions.

1. Applications To:

>NYS Department of Environmental Conservation ☑ Check here to confirm you sent this form to NYSDEC.

Check all permits that apply:

- ☑ Stream Disturbance
- ☐ Excavation and Fill in Navigable Waters
- ☐ Docks, Moorings or Platforms
- ☐ Dams and Impoundment Structures
- ☐ 401 Water Quality Certification
- ☐ Freshwater Wetlands
- ☐ Tidal Wetlands
- ☐ Wild, Scenic and Recreational Rivers
- ☐ Coastal Erosion Management
- ☐ Water Withdrawal
- ☐ Long Island Well
- ☐ Incidental Take of Endangered / Threatened Species

>US Army Corps of Engineers ☑ Check here to confirm you sent this form to USACE.

Check all permits that apply: ☐ Section 404 Clean Water Act ☐ Section 10 Rivers and Harbors Act

Is the project Federally funded? ☐ Yes ☑ No

If yes, name of Federal Agency:

General Permit Type(s), if known:

Preconstruction Notification: ☐ Yes ☑ No

>NYS Office of General Services ☐ Check here to confirm you sent this form to NYSOGS.

Check all permits that apply:

- ☐ State Owned Lands Under Water
- ☐ Utility Easement (pipelines, conduits, cables, etc.)
- ☐ Docks, Moorings or Platforms

>NYS Department of State ☐ Check here to confirm you sent this form to NYSDOS.

Check if this applies: ☐ Coastal Consistency Concurrence

2. Name of Applicant

Montgomery County

Taxpayer ID (if applicant is NOT an individual): 14-6002568

Mailing Address: 6 Park Street

Post Office / City: Fonda

State: NY

Zip: 12068

Telephone: (518) 853-3814

Email: emead@co.montgomery.ny.us

Applicant Must be (check all that apply): ☑ Owner ☑ Operator ☐ Lessee

3. Name of Property Owner (if different than Applicant)

Mailing Address

Post Office / City

State

Zip

Telephone

Email

For Agency Use Only	Agency Application Number:

4. Name of Contact / Agent

A. Thomas Bates, PE

Mailing Address	Post Office / City	State	Zip
7 South Church Street	Schenectady	NY	12305

Telephone (518) 382-1774 Email tbates@primeeng.com

5. Project / Facility Name

Strevy Lane Culvert Replacement

Property Tax Map Section / Block / Lot Number: N/A

Project Street Address, if applicable	Post Office / City	State	Zip
Strevy Lane	Amsterdam	NY	12010

Provide directions and distances to roads, intersections, bridges and bodies of water

Located in the Town of Florida approximately 350 feet south of the intersection of Strevy Lane and NYS Route 5s

☑ Town ☐ Village ☐ City

County	Stream/Waterbody Name
Florida	Montgomery	tributary to Mohawk River

Project Location Coordinates: Enter Latitude and Longitude in degrees, minutes, seconds:

Latitude: N42 ° 56 ' 14 " Longitude: W74 ° 16 ' 23 "

6. Project Description: Provide the following information about your project. Continue each response and provide any additional information on other pages. **Attach plans on separate pages.**

a. Purpose of the proposed project:

This project involves the replacement of an existing culvert under Strevy Lane that allows a tributary to the Mohawk River to flow beneath the roadway. All work will be completed as per the plans submitted with the application entitled "Montgomery County, Montgomery County Culvert Replacement, Contract No. 1 - Town of Amsterdam, Contract No. 2 - Town of Florida" by John M. McDonald Engineering.

b. Description of current site conditions:

c. Proposed site changes:

d. Type of structures and fill materials to be installed, and quantity of materials to be used (e.g., square feet of coverage, cubic yards of fill material, structures below ordinary/mean high water, etc.):

e. Area of excavation or dredging, volume of material to be removed, location of dredged material placement:

f. Is tree cutting or clearing proposed? ☐ Yes If Yes, explain below. ☑ No

Timing of the proposed cutting or clearing (month/year):

Number of trees to be cut: Acreage of trees to be cleared:

g. Work methods and type of equipment to be used:

h. Describe the planned sequence of activities:

i. Pollution control methods and other actions proposed to mitigate environmental impacts:

j. Erosion and silt control methods that will be used to prevent water quality impacts:

Silt fence

k. Alternatives considered to avoid regulated areas. If no feasible alternatives exist, explain how the project will minimize impacts:

l. Proposed use: ☐ Private ☑ Public ☐ Commercial

m. Proposed Start Date: October 2016 Estimated Completion Date: November 2016

n. Has work begun on project? ☐ Yes If Yes, explain below. ☑ No

o. Will project occupy Federal, State, or Municipal Land? ☑ Yes If Yes, explain below. ☐ No

The Town of Florida owns the Strevy Lane Road right-of-way

p. List any previous DEC, USACE, OGS or DOS Permit / Application numbers for activities at this location:

N/A

q. Will this project require additional Federal, State, or Local authorizations, including zoning changes?

☑ Yes If Yes, list below. ☐ No

NYS DEC & USACE Joint Application for Permit

7. **Signatures.**

Applicant and Owner (If different) must sign the application.
Append additional pages of this Signature section if there are multiple Applicants, Owners or Contact/Agents.

I hereby affirm that information provided on this form and all attachments submitted herewith is true to the best of my knowledge and belief.

Permission to Inspect - I hereby consent to Agency inspection of the project site and adjacent property areas. Agency staff may enter the property without notice between 7:00 am and 7:00 pm, Monday - Friday. Inspection may occur without the owner, applicant or agent present. If the property is posted with "keep out" signs or fenced with an unlocked gate, Agency staff may still enter the property. Agency staff may take measurements, analyze site physical characteristics, take soil and vegetation samples, sketch and photograph the site. I understand that failure to give this consent may result in denial of the permit(s) sought by this application.

False statements made herein are punishable as a Class A misdemeanor pursuant to Section 210.45 of the NYS Penal Law. Further, the applicant accepts full responsibility for all damage, direct or indirect, of whatever nature, and by whomever suffered, arising out of the project described herein and agrees to indemnify and save harmless the State from suits, actions, damages and costs of every name and description resulting from said project. In addition, Federal Law, 18 U.S.C., Section 1001 provides for a fine of not more than $10,000 or imprisonment for not more than 5 years, or both where an applicant knowingly and willingly falsifies, conceals, or covers up a material fact; or knowingly makes or uses a false, fictitious or fraudulent statement.

Signature of Applicant

Date: 2-21-17

Applicant Must be (check all that apply): ☑ Owner ☑ Operator ☐ Lessee

Printed Name: Eric Mead

Title: Commissioner

Signature of Owner (if different than Applicant)

Date:

Printed Name:

Title:

Signature of Contact / Agent

Date: 2/24/17

Printed Name: A. Thomas Bates, PE

Title: Project Engineer

For Agency Use Only **DETERMINATION OF NO PERMIT REQUIRED**

Agency Application Number

(Agency Name) has determined that No Permit is required from this Agency for the project described in this application.

Agency Representative:

Printed Name: Title:

Signature: Date:

Short Environmental Assessment Form
Part 1 - Project Information

Instructions for Completing

Part 1 - Project Information. The applicant or project sponsor is responsible for the completion of Part 1. Responses become part of the application for approval or funding, are subject to public review, and may be subject to further verification. Complete Part 1 based on information currently available. If additional research or investigation would be needed to fully respond to any item, please answer as thoroughly as possible based on current information.

Complete all items in Part 1. You may also provide any additional information which you believe will be needed by or useful to the lead agency; attach additional pages as necessary to supplement any item.

Part 1 - Project and Sponsor Information

Name of Action or Project:
Strevy Lane Culvert Replacement

Project Location (describe, and attach a location map):
Strevy Lane, Montgomery County, Florida, New York

Brief Description of Proposed Action:
Replacement of an existing culvert within the Strevy Lane right-of-way that allows a tributary to the Mohawk River to flow beneath the roadway. The existing culvert is undersized.

Project involves the replacement of a 30" RCP culvert with a 60" HDPE

Name of Applicant or Sponsor:	Telephone: (518) 853-3814
Montgomery County	E-Mail: emead@co.montgomery.ny.us

Address:
6 Park Street

City/PO:	State:	Zip Code:
Fonda	NY	12068

	NO	YES
1. Does the proposed action only involve the legislative adoption of a plan, local law, ordinance, administrative rule, or regulation? If Yes, attach a narrative description of the intent of the proposed action and the environmental resources that may be affected in the municipality and proceed to Part 2. If no, continue to question 2.	☑	☐
2. Does the proposed action require a permit, approval or funding from any other governmental Agency? If Yes, list agency(s) name and permit or approval: NYS DEC & USACE Joint Application for Permit	☐	☑

3.a. Total acreage of the site of the proposed action? <1 acres
b. Total acreage to be physically disturbed? <1 acres
c. Total acreage (project site and any contiguous properties) owned or controlled by the applicant or project sponsor? <1 acres

4. Check all land uses that occur on, adjoining and near the proposed action.
☐ Urban ☑ Rural (non-agriculture) ☐ Industrial ☐ Commercial ☑ Residential (suburban)
☑ Forest ☑ Agriculture ☐ Aquatic ☐ Other (specify): _____
☐ Parkland

	NO	YES	N/A
5. Is the proposed action,			
a. A permitted use under the zoning regulations?	☐	☑	☐
b. Consistent with the adopted comprehensive plan?	☐	☑	☐

	NO	YES
6. Is the proposed action consistent with the predominant character of the existing built or natural landscape?	☐	☑
7. Is the site of the proposed action located in, or does it adjoin, a state listed Critical Environmental Area? If Yes, identify: _____	☑	☐
8. a. Will the proposed action result in a substantial increase in traffic above present levels?	☑	☐
b. Are public transportation service(s) available at or near the site of the proposed action?	☑	☐
c. Are any pedestrian accommodations or bicycle routes available on or near site of the proposed action?	☑	☐
9. Does the proposed action meet or exceed the state energy code requirements? If the proposed action will exceed requirements, describe design features and technologies: _____	☑	☐
10. Will the proposed action connect to an existing public/private water supply? If No, describe method for providing potable water: _____	☑	☐
11. Will the proposed action connect to existing wastewater utilities? If No, describe method for providing wastewater treatment: _____	☑	☐
12. a. Does the site contain a structure that is listed on either the State or National Register of Historic Places?	☑	☐
b. Is the proposed action located in an archeological sensitive area?	☑	☐
13. a. Does any portion of the site of the proposed action, or lands adjoining the proposed action, contain wetlands or other waterbodies regulated by a federal, state or local agency?	☐	☑
b. Would the proposed action physically alter, or encroach into, any existing wetland or waterbody? If Yes, identify the wetland or waterbody and extent of alterations in square feet or acres: _____	☑	☐

14. Identify the typical habitat types that occur on, or are likely to be found on the project site. Check all that apply:
☐ Shoreline ☑ Forest ☑ Agricultural/grasslands ☐ Early mid-successional
☐ Wetland ☐ Urban ☑ Suburban

	NO	YES
15. Does the site of the proposed action contain any species of animal, or associated habitats, listed by the State or Federal government as threatened or endangered?	☑	☐
16. Is the project site located in the 100 year flood plain?	☑	☐
17. Will the proposed action create storm water discharge, either from point or non-point sources? If Yes, a. Will storm water discharges flow to adjacent properties? ☐ NO ☐ YES	☑	☐
b. Will storm water discharges be directed to established conveyance systems (runoff and storm drains)? If Yes, briefly describe: ☐ NO ☐ YES _____		

	NO	YES
18. Does the proposed action include construction or other activities that result in the impoundment of water or other liquids (e.g. retention pond, waste lagoon, dam)? If Yes, explain purpose and size:	✓	
19. Has the site of the proposed action or an adjoining property been the location of an active or closed solid waste management facility? If Yes, describe:	✓	
20. Has the site of the proposed action or an adjoining property been the subject of remediation (ongoing or completed) for hazardous waste? If Yes, describe:	✓	

I AFFIRM THAT THE INFORMATION PROVIDED ABOVE IS TRUE AND ACCURATE TO THE BEST OF MY KNOWLEDGE

Applicant/sponsor name: Montgomery County Date: 2-21-17

Signature:

PRINT FORM

Agency Use Only [If applicable]

Project:

Date:

Short Environmental Assessment Form
Part 2 - Impact Assessment

Part 2 is to be completed by the Lead Agency.
Answer all of the following questions in Part 2 using the information contained in Part 1 and other materials submitted by the project sponsor or otherwise available to the reviewer. When answering the questions the reviewer should be guided by the concept "Have my responses been reasonable considering the scale and context of the proposed action?"

	No, or small impact may occur	Moderate to large impact may occur
1. Will the proposed action create a material conflict with an adopted land use plan or zoning regulations?	✓	
2. Will the proposed action result in a change in the use or intensity of use of land?	✓	
3. Will the proposed action impair the character or quality of the existing community?	✓	
4. Will the proposed action have an impact on the environmental characteristics that caused the establishment of a Critical Environmental Area (CEA)?	✓	
5. Will the proposed action result in an adverse change in the existing level of traffic or affect existing infrastructure for mass transit, biking or walkway?	✓	
6. Will the proposed action cause an increase in the use of energy and it fails to incorporate reasonably available energy conservation or renewable energy opportunities?	✓	
7. Will the proposed action impact existing: a. public / private water supplies?	✓	
b. public / private wastewater treatment utilities?	✓	
8. Will the proposed action impair the character or quality of important historic, archaeological, architectural or aesthetic resources?	✓	
9. Will the proposed action result in an adverse change to natural resources (e.g., wetlands, waterbodies, groundwater, air quality, flora and fauna)?	✓	
10. Will the proposed action result in an increase in the potential for erosion, flooding or drainage problems?	✓	
11. Will the proposed action create a hazard to environmental resources or human health?	✓	

PRINT FORM

Agency Use Only [If applicable]

Project:

Date:

Short Environmental Assessment Form
Part 3 Determination of Significance

For every question in Part 2 that was answered "moderate to large impact may occur", or if there is a need to explain why a particular element of the proposed action may or will not result in a significant adverse environmental impact, please complete Part 3. Part 3 should, in sufficient detail, identify the impact, including any measures or design elements that have been included by the project sponsor to avoid or reduce impacts. Part 3 should also explain how the lead agency determined that the impact may or will not be significant. Each potential impact should be assessed considering its setting, probability of occurring, duration, irreversibility, geographic scope and magnitude. Also consider the potential for short-term, long-term and cumulative impacts.

☐ Check this box if you have determined, based on the information and analysis above, and any supporting documentation, that the proposed action may result in one or more potentially large or significant adverse impacts and an environmental impact statement is required.

☑ Check this box if you have determined, based on the information and analysis above, and any supporting documentation, that the proposed action will not result in any significant adverse environmental impacts.

Montgomery County Board	2-21-17
Name of Lead Agency	Date
Eric Mead	Commissioner
Print or Type Name of Responsible Officer in Lead Agency	Title of Responsible Officer
Signature of Responsible Officer in Lead Agency	Signature of Preparer (if different from Responsible Officer)

PRINT FORM

Montgomery County
Culvert Replacement Project

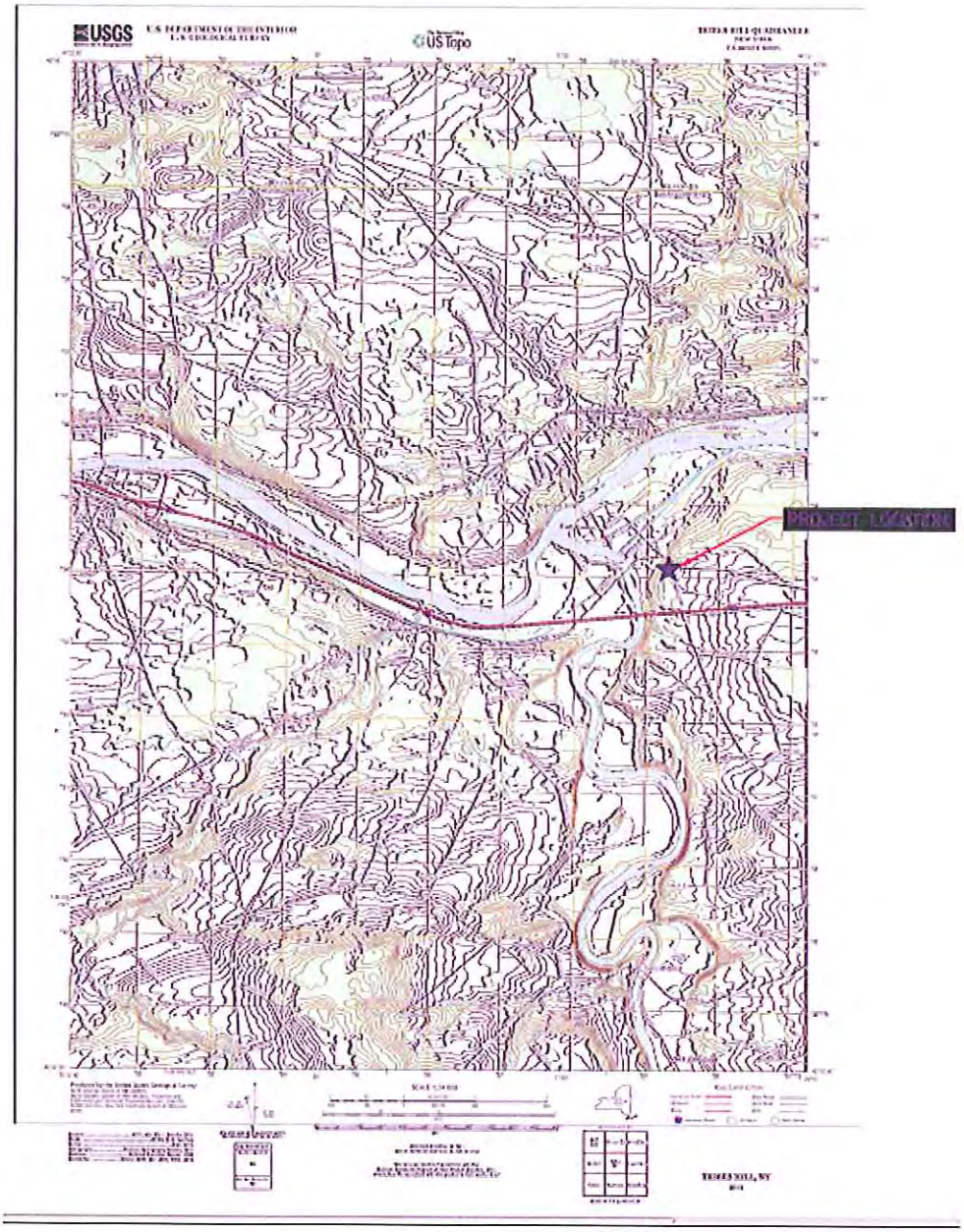

Site Location

Town of Florida, Strevy Lane Culvert Replacement

USGS, Tribes Hill Quadrangle

Lat: N42°56'14" Long: W74°16'23"

PERMIT PACKAGE

TOWN OF AMSTERDAM
MCKAY ROAD 1 CULVERT REPLACEMENT

- PERMISSION TO INSPECT PROPERTY – 1 PAGE
- JOINT APPLICATION FORM – 4 PAGES
- SHORT ENVIRONMENTAL ASSESSMENT FORM PART 1 – 3 PAGES
- SHORT ENVIRONMENTAL ASSESSMENT FORM PART 2 – 2 PAGES
- SITE LOCATION, USGS QUADRANGLE – 1 PAGE

NEW YORK STATE OF OPPORTUNITY. | Department of Environmental Conservation

PERMISSION TO INSPECT PROPERTY

By signing this permission form for submission with an application for a permit(s) to the Department of Environmental Conservation ("DEC"), the signer consents to inspection by DEC staff of the project site or facility for which a permit is sought and, to the extent necessary, areas adjacent to the project site or facility. This consent allows DEC staff to enter upon and pass through such property in order to inspect the project site or facility, without prior notice, between the hours of 7:00 a.m. and 7:00 p.m., Monday through Friday. If DEC staff should wish to conduct an inspection at any other times, DEC staff will so notify the applicant and will obtain a separate consent for such an inspection.

Inspections may take place as part of the application review prior to a decision to grant or deny the permit(s) sought. By signing this consent form, the signer agrees that this consent remains in effect as long as the application is pending, and is effective regardless of whether the signer, applicant or an agent is present at the time of the inspection. In the event that the project site or facility is posted with any form of "posted" or "keep out" notices, or fenced in with an unlocked gate, this permission authorizes DEC staff to disregard such notices or unlocked gates at the time of inspection.

The signer further agrees that during an inspection, DEC staff may, among other things, take measurements, may analyze physical characteristics of the site including, but not limited to, soils and vegetation (taking samples for analysis), and may make drawings and take photographs.

Failure to grant consent for an inspection is grounds for, and may result in, denial of the permit(s) sought by the application.

Permission is granted for inspection of property located at the following address(es):

McKay Road Culverts approximately 600 feet south of the
intersection of McKay Road and McDonald Drive

*By signing this form, I affirm under penalty of perjury that I am authorized to give consent to entry by DEC staff as described above. I understand that false statements made herein are punishable as a Class A misdemeanor pursuant to Section 210.45 of the Penal Law.**

Eric Mead, Commissioner		2-21-17
Print Name and Title	Signature	Date

*The signer of this form must be an individual or authorized representative of a legal entity that:

- owns fee title and is in possession of the property identified above;
- maintains possessory interest in the property through a lease, rental agreement or other legally binding agreement; or
- is provided permission to act on behalf of an individual or legal entity possessing fee title or other possessory interest in the property for the purpose of consenting to inspection of such property.

NEW YORK STATE | Department of Environmental Conservation | Office of General Services | Department of State

US Army Corps of Engineers

JOINT APPLICATION FORM

For Permits for activities activities affecting streams, waterways, waterbodies, wetlands, coastal areas, sources of water, and endangered and threatened species.

You must separately apply for and obtain Permits from each involved agency before starting work. Please read all instructions.

1. **Applications To:**

>NYS Department of Environmental Conservation ☑ Check here to confirm you sent this form to NYSDEC.

Check all permits that apply:

- ☑ Stream Disturbance
- ☐ Excavation and Fill in Navigable Waters
- ☐ Docks, Moorings or Platforms
- ☐ Dams and Impoundment Structures
- ☐ 401 Water Quality Certification
- ☐ Freshwater Wetlands
- ☐ Tidal Wetlands
- ☐ Wild, Scenic and Recreational Rivers
- ☐ Coastal Erosion Management
- ☐ Water Withdrawal
- ☐ Long Island Well
- ☐ Incidental Take of Endangered / Threatened Species

>US Army Corps of Engineers ☑ Check here to confirm you sent this form to USACE.

Check all permits that apply: ☐ Section 404 Clean Water Act ☐ Section 10 Rivers and Harbors Act

Is the project Federally funded? ☐ Yes ☑ No

If yes, name of Federal Agency:

General Permit Type(s), if known:

Preconstruction Notification: ☐ Yes ☑ No

>NYS Office of General Services ☐ Check here to confirm you sent this form to NYSOGS.

Check all permits that apply:

☐ State Owned Lands Under Water

☐ Utility Easement (pipelines, conduits, cables, etc.) ☐ Docks, Moorings or Platforms

>NYS Department of State ☐ Check here to confirm you sent this form to NYSDOS.

Check if this applies: ☐ Coastal Consistency Concurrence

2. **Name of Applicant**: Montgomery County

Taxpayer ID (if applicant is NOT an individual): 14-6002568

Mailing Address: 6 Park Street

Post Office / City: Fonda

State: NY

Zip: 12068

Telephone: (518) 853-3814

Email: emead@co.montgomery.ny.us

Applicant Must be (check all that apply): ☑ Owner ☑ Operator ☐ Lessee

3. **Name of Property Owner (if different than Applicant)**

Mailing Address

Post Office / City

State

Zip

Telephone

Email

For Agency Use Only	Agency Application Number:

4. Name of Contact / Agent

A. Thomas Bates, PE

Mailing Address	Post Office /Cit y	State	Zip
7 South Church Street	Schenectady	NY	12305

Telephone (518) 382-1774 Email tbates@primeeng.com

5. Project / Facility Name

McKay Road 1 Culvert Repalcement

Property Tax Map Section / Block / Lot Number: N/A

Project Street Address, if applicable	Post Office /Cit y	State	Zip
McKay Road	Amsterdam	NY	12010

Provide directions and distances to roads, intersections, bridges and bodies of water

Located in the Town of Amsterdam approximately 600 feet south of the intersection of McKay Road and McDonald Drive

☑ Town ☐ Village ☐ City

County	Stream/Waterbody Name
Montgomery	Fitzpatrick Creek

Project Location Coordinates: Enter Latitude and Longitude in degrees, minutes, seconds:

Latitude: N42 ° 58 ' 28 " Longitude: W74 ° 12 ' 39 "

6. Project Description: Provide the following information about your project. Continue each response and provide any additional information on other pages. **Attach plans on separate pages.**

a. Purpose of the proposed project:

This project involves the replacement of (2) existing culverts and the removal of one existing culvert under McKay Road that allows Fitzpatrick Creek and storm runoff to flow beneath the roadway. All work will be completed as per the plans submitted with the application entitled "Montgomery County, Montgomery County Culvert Replacement, Contract No. 1 - Town of Amsterdam, Contract No. 2 - Town of Florida" by John M. McDonald Engineering.

b. Description of current site conditions:

c. Proposed site changes:

d. Type of structures and fill materials to be installed, and quantity of materials to be used (e.g., square feet of coverage, cubic yards of fill material, structures below ordinary/mean high water, etc.):

e. Area of excavation or dredging, volume of material to be removed, location of dredged material placement:

f. Is tree cutting or clearing proposed? ☐ Yes If Yes, explain below. ☑ No

Timing of the proposed cutting or clearing (month/year):

Number of trees to be cut: Acreage of trees to be cleared:

g. Work methods and type of equipment to be used:

h. Describe the planned sequence of activities:

i. Pollution control methods and other actions proposed to mitigate environmental impacts:

j. Erosion and silt control methods that will be used to prevent water quality impacts:

Silt fence

k. Alternatives considered to avoid regulated areas. If no feasible alternatives exist, explain how the project will minimize impacts:

l. Proposed use: ☐ Private ☑ Public ☐ Commercial

m. Proposed Start Date: October 2016 Estimated Completion Date: November 2016

n. Has work begun on project? ☐ Yes If Yes, explain below. ☑ No

o. Will project occupy Federal, State, or Municipal Land? ☑ Yes If Yes, explain below. ☐ No

The Town of Amsterdam owns the McKay Road right-of-way

p. List any previous DEC, USACE, OGS or DOS Permit / Application numbers for activities at this location:

N/A

q. Will this project require additional Federal, State, or Local authorizations, including zoning changes?

☑ Yes If Yes, list below. ☐ No

NYS DEC & USACE Joint Application for Permit

7. **Signatures.**
Applicant and Owner (If different) must sign the application.
Append additional pages of this Signature section if there are multiple Applicants, Owners or Contact/Agents.

I hereby affirm that information provided on this form and all attachments submitted herewith is true to the best of my knowledge and belief.

Permission to Inspect - I hereby consent to Agency inspection of the project site and adjacent property areas. Agency staff may enter the property without notice between 7:00 am and 7:00 pm, Monday - Friday. Inspection may occur without the owner, applicant or agent present. If the property is posted with "keep out" signs or fenced with an unlocked gate, Agency staff may still enter the property. Agency staff may take measurements, analyze site physical characteristics, take soil and vegetation samples, sketch and photograph the site. I understand that failure to give this consent may result in denial of the permit(s) sought by this application.

False statements made herein are punishable as a Class A misdemeanor pursuant to Section 210.45 of the NYS Penal Law. Further, the applicant accepts full responsibility for all damage, direct or indirect, of whatever nature, and by whomever suffered, arising out of the project described herein and agrees to indemnify and save harmless the State from suits, actions, damages and costs of every name and description resulting from said project. In addition, Federal Law, 18 U.S.C., Section 1001 provides for a fine of not more than $10,000 or imprisonment for not more than 5 years, or both where an applicant knowingly and willingly falsifies, conceals, or covers up a material fact; or knowingly makes or uses a false, fictitious or fraudulent statement.

Signature of Applicant | Date: 2-21-17

Applicant Must be (check all that apply): ☑ Owner ☑ Operator ☐ Lessee

Printed Name: Eric Mead | Title: Commissioner

Signature of Owner (if different than Applicant) | Date:

Printed Name: | Title:

Signature of Contact / Agent | Date: 2/24/17

Printed Name: A. Thomas Bates, PE | Title: Project Engineer

For Agency Use Only **DETERMINATION OF NO PERMIT REQUIRED**

Agency Application Number

(Agency Name) has determined that No Permit is required from this Agency for the project described in this application.

Agency Representative:

Printed Name | Title

Signature | Date

Short Environmental Assessment Form
Part 1 - Project Information

Instructions for Completing

Part 1 - Project Information. The applicant or project sponsor is responsible for the completion of Part 1. Responses become part of the application for approval or funding, are subject to public review, and may be subject to further verification. Complete Part 1 based on information currently available. If additional research or investigation would be needed to fully respond to any item, please answer as thoroughly as possible based on current information.

Complete all items in Part 1. You may also provide any additional information which you believe will be needed by or useful to the lead agency; attach additional pages as necessary to supplement any item.

Part 1 - Project and Sponsor Information

Name of Action or Project:
McKay Road 1 Culvert Replacement

Project Location (describe, and attach a location map):
McKay Road, Montgomery County, Amsterdam, New York

Brief Description of Proposed Action:
Replacement of (2) existing culverts and the removal of (1) existing culvert within the McKay Road right-of-way that allows Fitzpatrick Creek and stormwater to flow beneath McKay Road. The existing culverts are undersized.

Project will replace existing 3'x4' squashed CMP pipe with 60" HDPE, (1) 24" CMP pipe with a 36" HDPE pipe, and removal of (1) 24" CMP Pipe. The 60" pipe will redirect flow eliminating the need for the existing 24" pipe running west to east.

Name of Applicant or Sponsor:	Telephone: (518) 853-3814
Montgomery County	E-Mail: emead@co.montgomery.ny.us

Address:
6 Park Street

City/PO:	State:	Zip Code:
Fonda	NY	12068

	NO	YES
1. Does the proposed action only involve the legislative adoption of a plan, local law, ordinance, administrative rule, or regulation? If Yes, attach a narrative description of the intent of the proposed action and the environmental resources that may be affected in the municipality and proceed to Part 2. If no, continue to question 2.	☑	☐
2. Does the proposed action require a permit, approval or funding from any other governmental Agency? If Yes, list agency(s) name and permit or approval: NYS DEC & USACE Joint Application for Permit	☐	☑

3.a. Total acreage of the site of the proposed action? <1 acres
b. Total acreage to be physically disturbed? <1 acres
c. Total acreage (project site and any contiguous properties) owned or controlled by the applicant or project sponsor? <1 acres

4. Check all land uses that occur on, adjoining and near the proposed action.
☐ Urban ☐ Rural (non-agriculture) ☐ Industrial ☐ Commercial ☑ Residential (suburban)
☑ Forest ☑ Agriculture ☐ Aquatic ☐ Other (specify): _____
☐ Parkland

	NO	YES	N/A
5. Is the proposed action,			
a. A permitted use under the zoning regulations?	☐	☑	☐
b. Consistent with the adopted comprehensive plan?	☐	☑	☐
6. Is the proposed action consistent with the predominant character of the existing built or natural landscape?	NO ☐	YES ☑	
7. Is the site of the proposed action located in, or does it adjoin, a state listed Critical Environmental Area? If Yes, identify: _____	NO ☑	YES ☐	
8. a. Will the proposed action result in a substantial increase in traffic above present levels?	NO ☑	YES ☐	
b. Are public transportation service(s) available at or near the site of the proposed action?	☑	☐	
c. Are any pedestrian accommodations or bicycle routes available on or near site of the proposed action?	☑	☐	
9. Does the proposed action meet or exceed the state energy code requirements? If the proposed action will exceed requirements, describe design features and technologies: _____	NO ☑	YES ☐	
10. Will the proposed action connect to an existing public/private water supply? If No, describe method for providing potable water: _____	NO ☑	YES ☐	
11. Will the proposed action connect to existing wastewater utilities? If No, describe method for providing wastewater treatment: _____	NO ☑	YES ☐	
12. a. Does the site contain a structure that is listed on either the State or National Register of Historic Places?	NO ☑	YES ☐	
b. Is the proposed action located in an archeological sensitive area?	☑	☐	
13. a. Does any portion of the site of the proposed action, or lands adjoining the proposed action, contain wetlands or other waterbodies regulated by a federal, state or local agency?	NO ☐	YES ☑	
b. Would the proposed action physically alter, or encroach into, any existing wetland or waterbody? If Yes, identify the wetland or waterbody and extent of alterations in square feet or acres: _____	☑	☐	
14. Identify the typical habitat types that occur on, or are likely to be found on the project site. Check all that apply: ☐ Shoreline ☑ Forest ☑ Agricultural/grasslands ☐ Early mid-successional ☐ Wetland ☐ Urban ☑ Suburban			
15. Does the site of the proposed action contain any species of animal, or associated habitats, listed by the State or Federal government as threatened or endangered?	NO ☑	YES ☐	
16. Is the project site located in the 100 year flood plain?	NO ☑	YES ☐	
17. Will the proposed action create storm water discharge, either from point or non-point sources? If Yes, a. Will storm water discharges flow to adjacent properties? ☐ NO ☐ YES	NO ☑	YES ☐	
b. Will storm water discharges be directed to established conveyance systems (runoff and storm drains)? If Yes, briefly describe: ☐ NO ☐ YES _____			

	NO	YES
18. Does the proposed action include construction or other activities that result in the impoundment of water or other liquids (e.g. retention pond, waste lagoon, dam)? If Yes, explain purpose and size:	☑	☐
19. Has the site of the proposed action or an adjoining property been the location of an active or closed solid waste management facility? If Yes, describe:	☑	☐
20. Has the site of the proposed action or an adjoining property been the subject of remediation (ongoing or completed) for hazardous waste? If Yes, describe:	☑	☐

I AFFIRM THAT THE INFORMATION PROVIDED ABOVE IS TRUE AND ACCURATE TO THE BEST OF MY KNOWLEDGE

Applicant/~~sponsor name~~: Montgomery County Date: 2-21-17

Signature:

PRINT FORM

Agency Use Only [If applicable]	
Project:	
Date:	

Short Environmental Assessment Form
Part 2 - Impact Assessment

Part 2 is to be completed by the Lead Agency.
Answer all of the following questions in Part 2 using the information contained in Part 1 and other materials submitted by the project sponsor or otherwise available to the reviewer. When answering the questions the reviewer should be guided by the concept "Have my responses been reasonable considering the scale and context of the proposed action?"

	No, or small impact may occur	Moderate to large impact may occur
1. Will the proposed action create a material conflict with an adopted land use plan or zoning regulations?	☑	☐
2. Will the proposed action result in a change in the use or intensity of use of land?	☑	☐
3. Will the proposed action impair the character or quality of the existing community?	☑	☐
4. Will the proposed action have an impact on the environmental characteristics that caused the establishment of a Critical Environmental Area (CEA)?	☑	☐
5. Will the proposed action result in an adverse change in the existing level of traffic or affect existing infrastructure for mass transit, biking or walkway?	☑	☐
6. Will the proposed action cause an increase in the use of energy and it fails to incorporate reasonably available energy conservation or renewable energy opportunities?	☑	☐
7. Will the proposed action impact existing: a. public / private water supplies?	☑	☐
b. public / private wastewater treatment utilities?	☑	☐
8. Will the proposed action impair the character or quality of important historic, archaeological, architectural or aesthetic resources?	☑	☐
9. Will the proposed action result in an adverse change to natural resources (e.g., wetlands, waterbodies, groundwater, air quality, flora and fauna)?	☑	☐
10. Will the proposed action result in an increase in the potential for erosion, flooding or drainage problems?	☑	☐
11. Will the proposed action create a hazard to environmental resources or human health?	☑	☐

PRINT FORM

Agency Use Only [If applicable]

Project:

Date:

Short Environmental Assessment Form
Part 3 Determination of Significance

For every question in Part 2 that was answered "moderate to large impact may occur", or if there is a need to explain why a particular element of the proposed action may or will not result in a significant adverse environmental impact, please complete Part 3. Part 3 should, in sufficient detail, identify the impact, including any measures or design elements that have been included by the project sponsor to avoid or reduce impacts. Part 3 should also explain how the lead agency determined that the impact may or will not be significant. Each potential impact should be assessed considering its setting, probability of occurring, duration, irreversibility, geographic scope and magnitude. Also consider the potential for short-term, long-term and cumulative impacts.

☐ Check this box if you have determined, based on the information and analysis above, and any supporting documentation, that the proposed action may result in one or more potentially large or significant adverse impacts and an environmental impact statement is required.

☑ Check this box if you have determined, based on the information and analysis above, and any supporting documentation, that the proposed action will not result in any significant adverse environmental impacts.

Montgomery County Board Name of Lead Agency	2-21-17 Date
Eric Mead Print or Type Name of Responsible Officer in Lead Agency	Commissioner Title of Responsible Officer
Signature of Responsible Officer in Lead Agency	Signature of Preparer (if different from Responsible Officer)

PRINT FORM

Montgomery County
Culvert Replacement Project

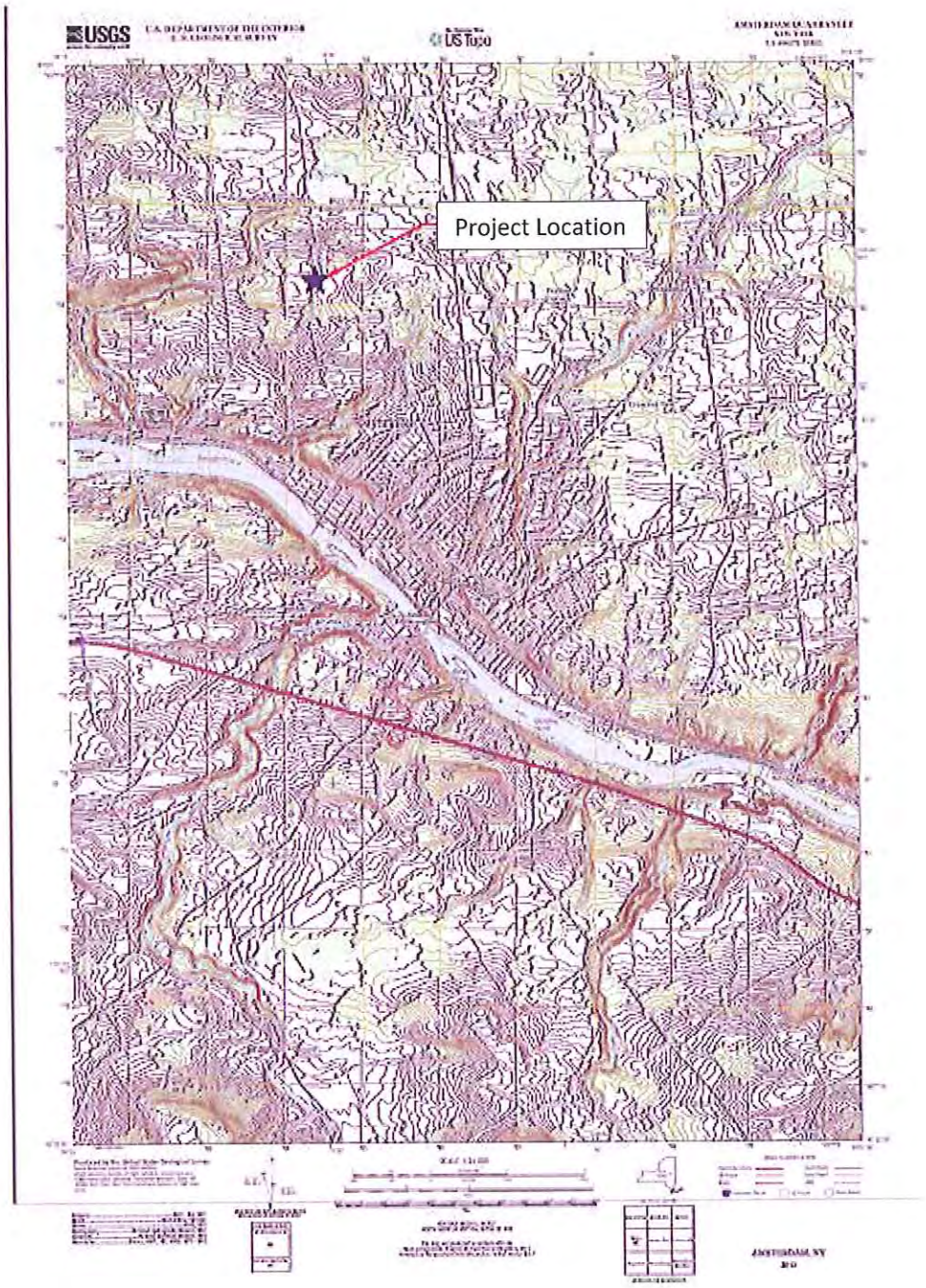

Site Location

Town of Amsterdam, McKay Road 1 Culvert Replacement

USGS, Amsterdam Quadrangle

Lat: N42°58′28″ Long: W74°12′39″

PERMIT PACKAGE

TOWN OF AMSTERDAM
MCKAY ROAD 2 CULVERT REPLACEMENT

- PERMISSION TO INSPECT PROPERTY – 1 PAGE
- JOINT APPLICATION FORM – 4 PAGES
- SHORT ENVIRONMENTAL ASSESSMENT FORM PART 1 – 3 PAGES
- SHORT ENVIRONMENTAL ASSESSMENT FORM PART 2 – 2 PAGES
- SITE LOCATION, USGS QUADRANGLE – 1 PAGE

NEW YORK STATE OF OPPORTUNITY. | Department of Environmental Conservation

PERMISSION TO INSPECT PROPERTY

By signing this permission form for submission with an application for a permit(s) to the Department of Environmental Conservation ("DEC"), the signer consents to inspection by DEC staff of the project site or facility for which a permit is sought and, to the extent necessary, areas adjacent to the project site or facility. This consent allows DEC staff to enter upon and pass through such property in order to inspect the project site or facility, without prior notice, between the hours of 7:00 a.m. and 7:00 p.m., Monday through Friday. If DEC staff should wish to conduct an inspection at any other times, DEC staff will so notify the applicant and will obtain a separate consent for such an inspection.

Inspections may take place as part of the application review prior to a decision to grant or deny the permit(s) sought. By signing this consent form, the signer agrees that this consent remains in effect as long as the application is pending, and is effective regardless of whether the signer, applicant or an agent is present at the time of the inspection. In the event that the project site or facility is posted with any form of "posted" or "keep out" notices, or fenced in with an unlocked gate, this permission authorizes DEC staff to disregard such notices or unlocked gates at the time of inspection.

The signer further agrees that during an inspection, DEC staff may, among other things, take measurements, may analyze physical characteristics of the site including, but not limited to, soils and vegetation (taking samples for analysis), and may make drawings and take photographs.

Failure to grant consent for an inspection is grounds for, and may result in, denial of the permit(s) sought by the application.

Permission is granted for inspection of property located at the following address(es):

McKay Road approximately 1400 feet north of the intersection
of McKay Road and Golf Course Road.

*By signing this form, I affirm under penalty of perjury that I am authorized to give consent to entry by DEC staff as described above. I understand that false statements made herein are punishable as a Class A misdemeanor pursuant to Section 210.45 of the Penal Law.**

Eric Mead, Commissioner		2-21-17
Print Name and Title	Signature	Date

*The signer of this form must be an individual or authorized representative of a legal entity that:

- owns fee title and is in possession of the property identified above;
- maintains possessory interest in the property through a lease, rental agreement or other legally binding agreement; or
- is provided permission to act on behalf of an individual or legal entity possessing fee title or other possessory interest in the property for the purpose of consenting to inspection of such property.

NEW YORK STATE | Department of Environmental Conservation | Office of General Services | Department of State

US Army Corps of Engineers

JOINT APPLICATION FORM

For Permits for activities activities affecting streams, waterways, waterbodies, wetlands, coastal areas, sources of water, and endangered and threatened species.

You must separately apply for and obtain Permits from each involved agency before starting work. Please read all instructions.

1. **Applications To:**

>NYS Department of Environmental Conservation ☑ Check here to confirm you sent this form to NYSDEC.

Check all permits that apply:

- ☑ Stream Disturbance
- ☐ Excavation and Fill in Navigable Waters
- ☐ Docks, Moorings or Platforms
- ☐ Dams and Impoundment Structures
- ☐ 401 Water Quality Certification
- ☐ Freshwater Wetlands
- ☐ Tidal Wetlands
- ☐ Wild, Scenic and Recreational Rivers
- ☐ Coastal Erosion Management
- ☐ Water Withdrawal
- ☐ Long Island Well
- ☐ Incidental Take of Endangered / Threatened Species

>US Army Corps of Engineers ☑ Check here to confirm you sent this form to USACE.

Check all permits that apply: ☐ Section 404 Clean Water Act ☐ Section 10 Rivers and Harbors Act

Is the project Federally funded? ☐ Yes ☑ No

If yes, name of Federal Agency:

General Permit Type(s), if known:

Preconstruction Notification: ☐ Yes ☑ No

>NYS Office of General Services ☐ Check here to confirm you sent this form to NYSOGS.

Check all permits that apply:

- ☐ State Owned Lands Under Water
- ☐ Utility Easement (pipelines, conduits, cables, etc.)
- ☐ Docks, Moorings or Platforms

>NYS Department of State ☐ Check here to confirm you sent this form to NYSDOS.

Check if this applies: ☐ Coastal Consistency Concurrence

2. **Name of Applicant**: Montgomery County

Taxpayer ID (if applicant is NOT an individual): 14-6002568

Mailing Address: 6 Park Street

Post Office / City: Fonda

State: NY

Zip: 12068

Telephone: (518) 853-3814

Email: emead@co.montgomery.ny.us

Applicant Must be (check all that apply): ☑ Owner ☑ Operator ☐ Lessee

3. **Name of Property Owner (if different than Applicant)**

Mailing Address

Post Office / City

State

Zip

Telephone

Email

For Agency Use Only	Agency Application Number:

4. Name of Contact / Agent

A. Thomas Bates, PE

Mailing Address	Post Office / City	State	Zip
7 South Church Street	Schenectady	NY	12305

Telephone (518) 382-1774 Email tbates@primeeng.com

5. Project / Facility Name

McKay Road 2 Culvert Replacement

Property Tax Map Section / Block / Lot Number: N/A

Project Street Address, if applicable	Post Office / City	State	Zip
McKay Road	Amsterdam	NY	12010

Provide directions and distances to roads, intersections, bridges and bodies of water

Located in the Town of Amsterdam approximately 1400 feet north of the intersection of McKay Road and Golf Course Road

☑ Town ☐ Village ☐ City

County	Stream/Waterbody Name
Montgomery	Fitzpatrick Creek

Project Location Coordinates: Enter Latitude and Longitude in degrees, minutes, seconds:

Latitude: N42 ° 58 ' 08 " Longitude: W74 ° 12 ' 40 "

6. Project Description: Provide the following information about your project. Continue each response and provide any additional information on other pages. **Attach plans on separate pages.**

a. Purpose of the proposed project:

This project involves the replacement of an existing culvert under McKay Road that allows Fitzpatrick Creek to flow beneath the roadway. All work will be completed as per the plans submitted with the application entitled "Montgomery County, Montgomery County Culvert Replacement, Contract No. 1 - Town of Amsterdam, Contract No. 2 - Town of Florida" by John M. McDonald Engineering.

b. Description of current site conditions:

c. Proposed site changes:

d. Type of structures and fill materials to be installed, and quantity of materials to be used (e.g., square feet of coverage, cubic yards of fill material, structures below ordinary/mean high water, etc.):

e. Area of excavation or dredging, volume of material to be removed, location of dredged material placement:

f. Is tree cutting or clearing proposed? ☐ Yes If Yes, explain below. ☑ No

Timing of the proposed cutting or clearing (month/year):

Number of trees to be cut: Acreage of trees to be cleared:

g. Work methods and type of equipment to be used:

h. Describe the planned sequence of activities:

i. Pollution control methods and other actions proposed to mitigate environmental impacts:

j. Erosion and silt control methods that will be used to prevent water quality impacts:

Silt fence

k. Alternatives considered to avoid regulated areas. If no feasible alternatives exist, explain how the project will minimize impacts:

l. Proposed use: ☐ Private ☑ Public ☐ Commercial

m. Proposed Start Date: October 2016 Estimated Completion Date: November 2016

n. Has work begun on project? ☐ Yes If Yes, explain below. ☑ No

o. Will project occupy Federal, State, or Municipal Land? ☑ Yes If Yes, explain below. ☐ No

The Town of Amsterdam owns the McKay Road right-of-way

p. List any previous DEC, USACE, OGS or DOS Permit / Application numbers for activities at this location:

N/A

q. Will this project require additional Federal, State, or Local authorizations, including zoning changes?

☑ Yes If Yes, list below. ☐ No

NYS DEC & USACE Joint Application for Permit

7. **Signatures.**

Applicant and Owner (If different) must sign the application.
Append additional pages of this Signature section if there are multiple Applicants, Owners or Contact/Agents.

I hereby affirm that information provided on this form and all attachments submitted herewith is true to the best of my knowledge and belief.

Permission to Inspect - I hereby consent to Agency inspection of the project site and adjacent property areas. Agency staff may enter the property without notice between 7:00 am and 7:00 pm, Monday - Friday. Inspection may occur without the owner, applicant or agent present. If the property is posted with "keep out" signs or fenced with an unlocked gate, Agency staff may still enter the property. Agency staff may take measurements, analyze site physical characteristics, take soil and vegetation samples, sketch and photograph the site. I understand that failure to give this consent may result in denial of the permit(s) sought by this application.

False statements made herein are punishable as a Class A misdemeanor pursuant to Section 210.45 of the NYS Penal Law. Further, the applicant accepts full responsibility for all damage, direct or indirect, of whatever nature, and by whomever suffered, arising out of the project described herein and agrees to indemnify and save harmless the State from suits, actions, damages and costs of every name and description resulting from said project. In addition, Federal Law, 18 U.S.C., Section 1001 provides for a fine of not more than $10,000 or imprisonment for not more than 5 years, or both where an applicant knowingly and willingly falsifies, conceals, or covers up a material fact; or knowingly makes or uses a false, fictitious or fraudulent statement.

Signature of Applicant | Date: 2-21-17

Applicant Must be (check all that apply): ☑ Owner ☑ Operator ☐ Lessee

Printed Name: Eric Mead | Title: Commissioner

Signature of Owner (if different than Applicant) | Date:

Printed Name: | Title:

Signature of Contact / Agent | Date: 2/21/17

Printed Name: A. Thomas Bates, PE | Title: Project Engineer

For Agency Use Only **DETERMINATION OF NO PERMIT REQUIRED**

Agency Application Number

(Agency Name) has determined that No Permit is required from this Agency for the project described in this application.

Agency Representative:

Printed Name | Title

Signature | Date

Short Environmental Assessment Form
Part 1 - Project Information

Instructions for Completing

Part 1 - Project Information. The applicant or project sponsor is responsible for the completion of Part 1. Responses become part of the application for approval or funding, are subject to public review, and may be subject to further verification. Complete Part 1 based on information currently available. If additional research or investigation would be needed to fully respond to any item, please answer as thoroughly as possible based on current information.

Complete all items in Part 1. You may also provide any additional information which you believe will be needed by or useful to the lead agency; attach additional pages as necessary to supplement any item.

Part 1 - Project and Sponsor Information

Name of Action or Project:
McKay Road 2 Culvert Replacement

Project Location (describe, and attach a location map):
McKay Road, Montgomery County, Amsterdam, New York

Brief Description of Proposed Action:
Replacement of an existing culvert pipe within the McKay Road right-of-way that allows Fitzpatrick Creek to flow beneath the roadway. The existing culvert pipe is undersized.

Project will replace existing 30" RCP culvert with a 60" HDPE culvert.

Name of Applicant or Sponsor:	Telephone: (518) 853-3814
Montgomery County	E-Mail: emead@co.montgomery.ny.us

Address:
6 Park Street

City/PO:	State:	Zip Code:
Fonda	NY	12068

	NO	YES
1. Does the proposed action only involve the legislative adoption of a plan, local law, ordinance, administrative rule, or regulation? If Yes, attach a narrative description of the intent of the proposed action and the environmental resources that may be affected in the municipality and proceed to Part 2. If no, continue to question 2.	☑	☐
2. Does the proposed action require a permit, approval or funding from any other governmental Agency? If Yes, list agency(s) name and permit or approval: NYS DEC & USACE Joint Application for Permit	☐	☑

3.a. Total acreage of the site of the proposed action? <1 acres
b. Total acreage to be physically disturbed? <1 acres
c. Total acreage (project site and any contiguous properties) owned or controlled by the applicant or project sponsor? <1 acres

4. Check all land uses that occur on, adjoining and near the proposed action.
☐ Urban ☐ Rural (non-agriculture) ☐ Industrial ☐ Commercial ☑ Residential (suburban)
☑ Forest ☑ Agriculture ☐ Aquatic ☐ Other (specify): _____
☐ Parkland

	NO	YES	N/A
5. Is the proposed action,			
a. A permitted use under the zoning regulations?	☐	☑	☐
b. Consistent with the adopted comprehensive plan?	☐	☑	☐
6. Is the proposed action consistent with the predominant character of the existing built or natural landscape?	NO ☐	YES ☑	
7. Is the site of the proposed action located in, or does it adjoin, a state listed Critical Environmental Area? If Yes, identify: _____	NO ☑	YES ☐	
8. a. Will the proposed action result in a substantial increase in traffic above present levels?	NO ☑	YES ☐	
b. Are public transportation service(s) available at or near the site of the proposed action?	☑	☐	
c. Are any pedestrian accommodations or bicycle routes available on or near site of the proposed action?	☑	☐	
9. Does the proposed action meet or exceed the state energy code requirements? If the proposed action will exceed requirements, describe design features and technologies: _____	NO ☑	YES ☐	
10. Will the proposed action connect to an existing public/private water supply? If No, describe method for providing potable water: _____	NO ☑	YES ☐	
11. Will the proposed action connect to existing wastewater utilities? If No, describe method for providing wastewater treatment: _____	NO ☑	YES ☐	
12. a. Does the site contain a structure that is listed on either the State or National Register of Historic Places?	NO ☑	YES ☐	
b. Is the proposed action located in an archeological sensitive area?	☑	☐	
13. a. Does any portion of the site of the proposed action, or lands adjoining the proposed action, contain wetlands or other waterbodies regulated by a federal, state or local agency?	NO ☐	YES ☑	
b. Would the proposed action physically alter, or encroach into, any existing wetland or waterbody? If Yes, identify the wetland or waterbody and extent of alterations in square feet or acres: _____	☑	☐	
14. Identify the typical habitat types that occur on, or are likely to be found on the project site. Check all that apply: ☐ Shoreline ☑ Forest ☑ Agricultural/grasslands ☐ Early mid-successional ☐ Wetland ☐ Urban ☑ Suburban			
15. Does the site of the proposed action contain any species of animal, or associated habitats, listed by the State or Federal government as threatened or endangered?	NO ☑	YES ☐	
16. Is the project site located in the 100 year flood plain?	NO ☑	YES ☐	
17. Will the proposed action create storm water discharge, either from point or non-point sources? If Yes, a. Will storm water discharges flow to adjacent properties? ☐ NO ☐ YES	NO ☑	YES ☐	
b. Will storm water discharges be directed to established conveyance systems (runoff and storm drains)? If Yes, briefly describe: ☐ NO ☐ YES _____			

	NO	YES
18. Does the proposed action include construction or other activities that result in the impoundment of water or other liquids (e.g. retention pond, waste lagoon, dam)? If Yes, explain purpose and size:	✓	
19. Has the site of the proposed action or an adjoining property been the location of an active or closed solid waste management facility? If Yes, describe:	✓	
20. Has the site of the proposed action or an adjoining property been the subject of remediation (ongoing or completed) for hazardous waste? If Yes, describe:	✓	

I AFFIRM THAT THE INFORMATION PROVIDED ABOVE IS TRUE AND ACCURATE TO THE BEST OF MY KNOWLEDGE

Applicant/sponsor name: Montgomery County Date: 2-21-17

Signature:

PRINT FORM

Agency Use Only [If applicable]

Project:

Date:

Short Environmental Assessment Form
Part 2 - Impact Assessment

Part 2 is to be completed by the Lead Agency.
Answer all of the following questions in Part 2 using the information contained in Part 1 and other materials submitted by the project sponsor or otherwise available to the reviewer. When answering the questions the reviewer should be guided by the concept "Have my responses been reasonable considering the scale and context of the proposed action?"

	No, or small impact may occur	Moderate to large impact may occur
1. Will the proposed action create a material conflict with an adopted land use plan or zoning regulations?	✓	
2. Will the proposed action result in a change in the use or intensity of use of land?	✓	
3. Will the proposed action impair the character or quality of the existing community?	✓	
4. Will the proposed action have an impact on the environmental characteristics that caused the establishment of a Critical Environmental Area (CEA)?	✓	
5. Will the proposed action result in an adverse change in the existing level of traffic or affect existing infrastructure for mass transit, biking or walkway?	✓	
6. Will the proposed action cause an increase in the use of energy and it fails to incorporate reasonably available energy conservation or renewable energy opportunities?	✓	
7. Will the proposed action impact existing: a. public / private water supplies?	✓	
b. public / private wastewater treatment utilities?	✓	
8. Will the proposed action impair the character or quality of important historic, archaeological, architectural or aesthetic resources?	✓	
9. Will the proposed action result in an adverse change to natural resources (e.g., wetlands, waterbodies, groundwater, air quality, flora and fauna)?	✓	
10. Will the proposed action result in an increase in the potential for erosion, flooding or drainage problems?	✓	
11. Will the proposed action create a hazard to environmental resources or human health?	✓	

PRINT FORM

Agency Use Only [If applicable]

Project:	
Date:	

Short Environmental Assessment Form
Part 3 Determination of Significance

For every question in Part 2 that was answered "moderate to large impact may occur", or if there is a need to explain why a particular element of the proposed action may or will not result in a significant adverse environmental impact, please complete Part 3. Part 3 should, in sufficient detail, identify the impact, including any measures or design elements that have been included by the project sponsor to avoid or reduce impacts. Part 3 should also explain how the lead agency determined that the impact may or will not be significant. Each potential impact should be assessed considering its setting, probability of occurring, duration, irreversibility, geographic scope and magnitude. Also consider the potential for short-term, long-term and cumulative impacts.

☐ Check this box if you have determined, based on the information and analysis above, and any supporting documentation, that the proposed action may result in one or more potentially large or significant adverse impacts and an environmental impact statement is required.

☑ Check this box if you have determined, based on the information and analysis above, and any supporting documentation, that the proposed action will not result in any significant adverse environmental impacts.

Montgomery County Board	2-21-17
Name of Lead Agency	Date
Eric Mead	Commissioner
Print or Type Name of Responsible Officer in Lead Agency	Title of Responsible Officer
Signature of Responsible Officer in Lead Agency	Signature of Preparer (if different from Responsible Officer)

PRINT FORM

Montgomery County
Culvert Replacement Project

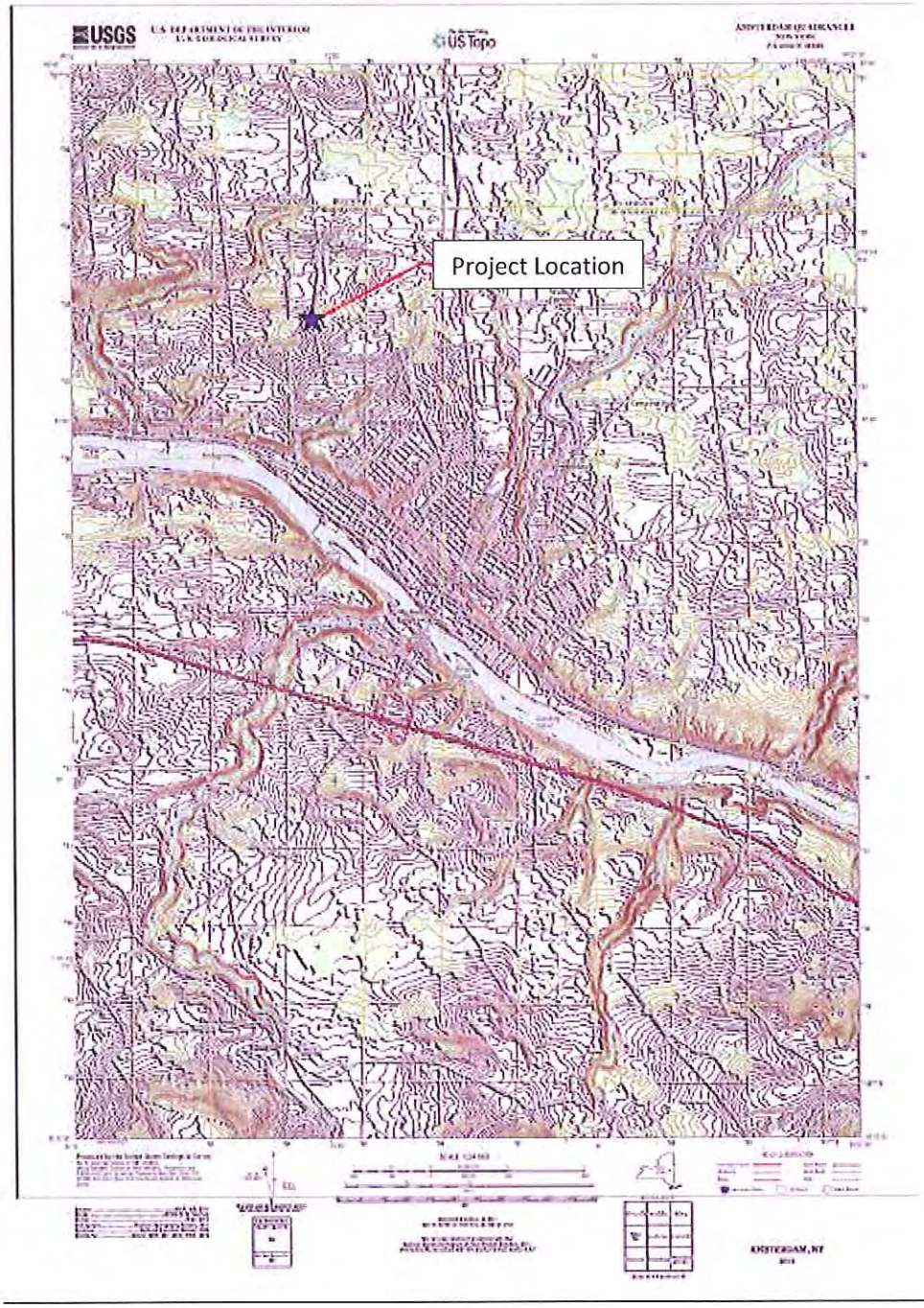

Site Location

Town of Amsterdam, McKay Road 2 Culvert Replacement

USGS, Amsterdam Quadrangle

Lat: N42°58'08" Long: W74°12'40"

EXHIBIT 1
PHOTOGRAPHS

Bullshead Road culvert outlet looking southeast. Note lack of cover over pipe.

Bullshead Road culvert inlet looking north. Note lack of cover over pipe.

Bullshead Road upstream of culvert inlet looking southeast.

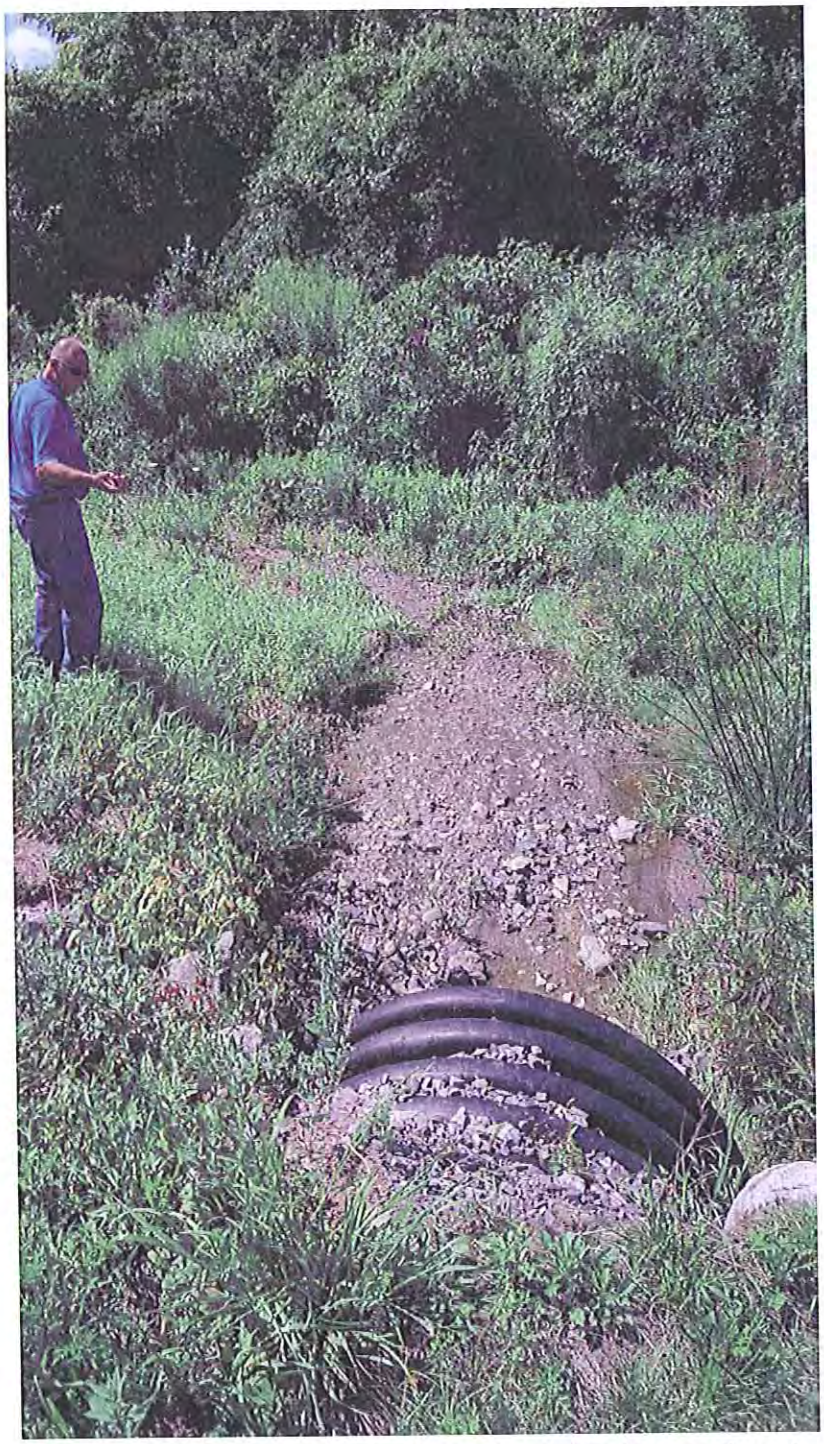

Bullshead Road downstream of culvert outlet looking northwest.

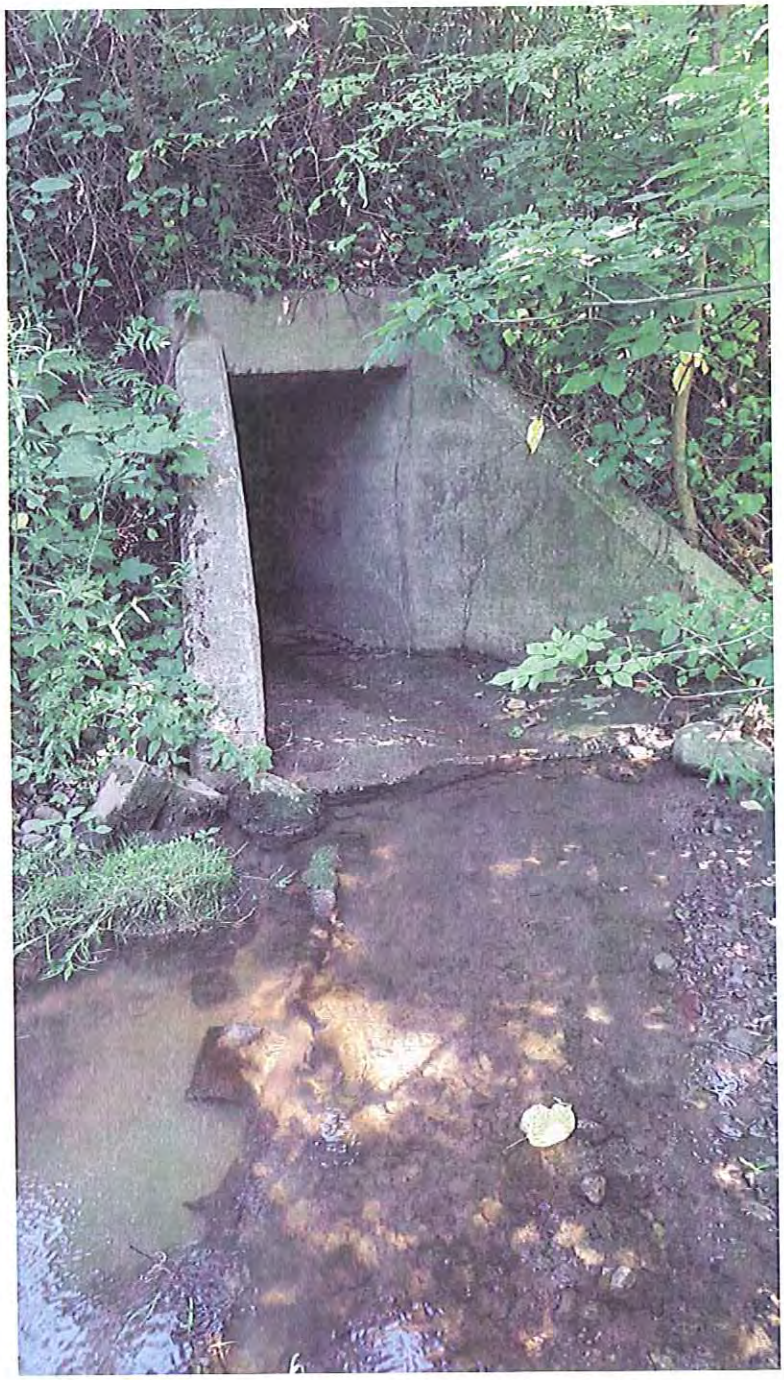

Fort Hunter Road culvert inlet looking northeast.

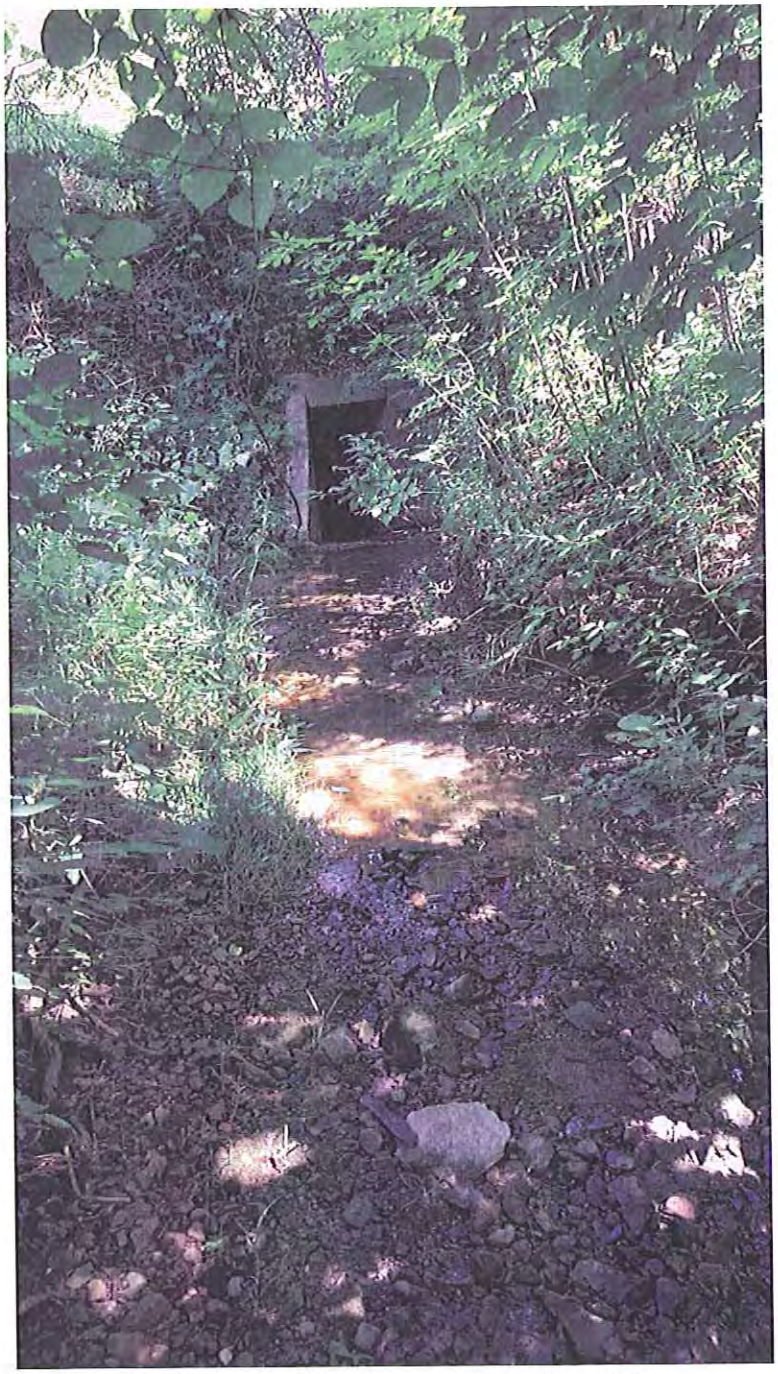

Fort Hunter Road culvert inlet looking north.

Fort Hunter Road culvert outlet looking west. Notice undermining beneath wingwalls.

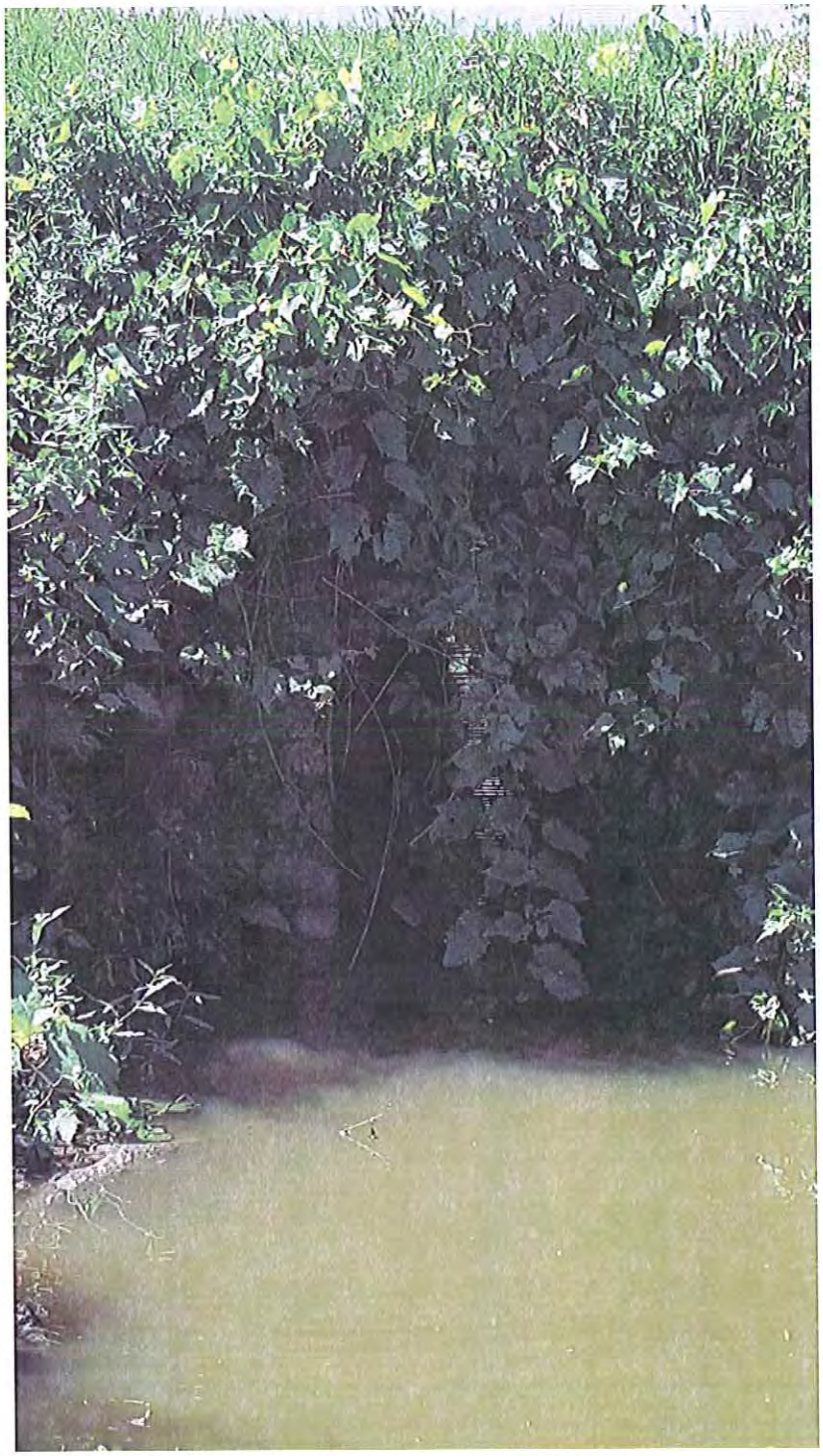

Hartley Road culvert outlet looking west.

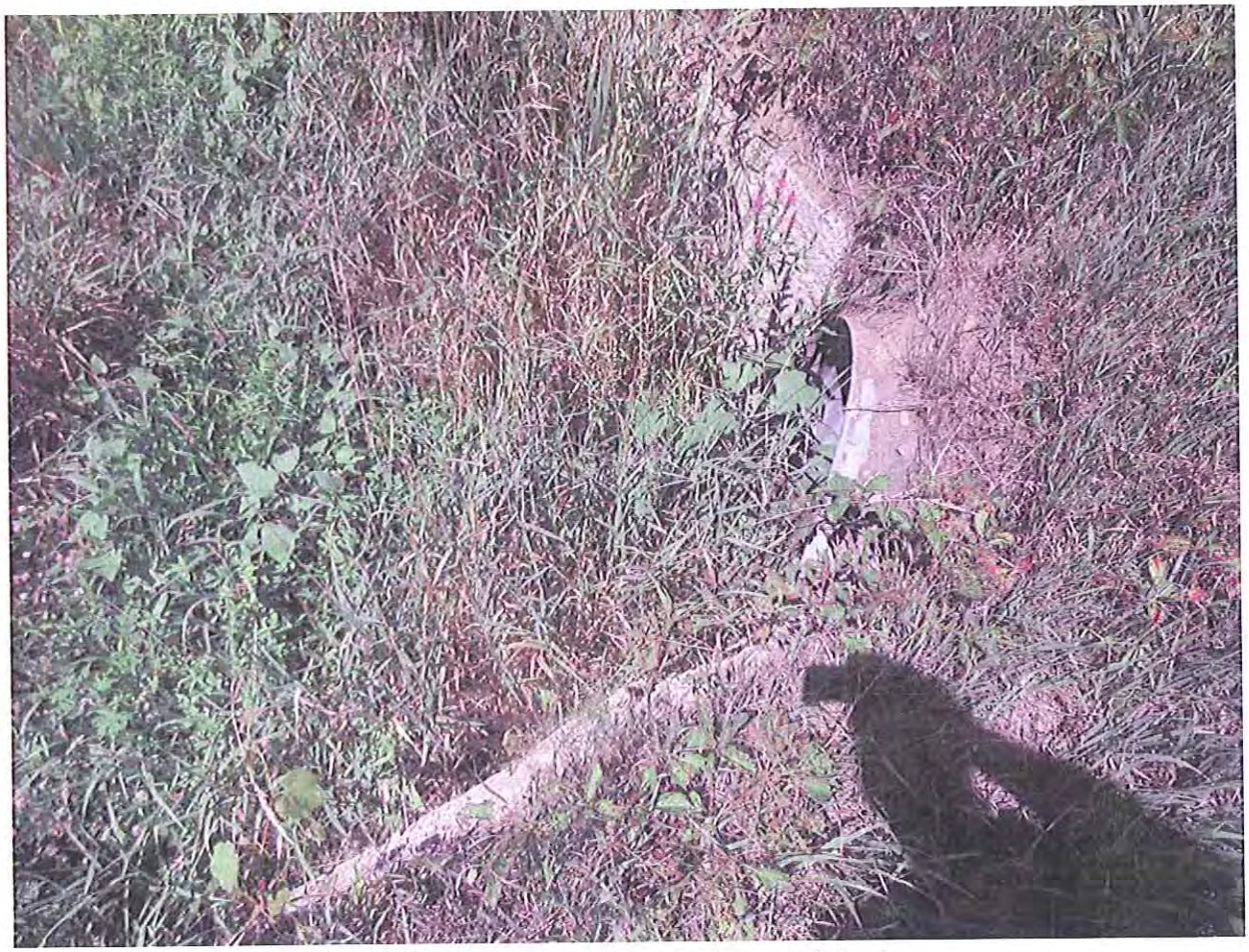

Hartley Road culvert inlet looking northwest.

Hartley Road culvert downstream of outlet, looking east.

Hartley Road culvert upstream of inlet, looking northwest.

Langley Road culvert inlets, looking west.

Langley Road culvert outlets, looking southwest.

Langley Road upstream of culvert inlets, looking west.

Langley Road downstream of culvert outlets, looking north.

McKay Road 1 3'x4' and 24" culvert outlets, looking northwest.

McKay Road 1 24" culvert outlet, 24" culvert beneath road inlet, looking south.

McKay Road 1 downstream of 3'x4' and 24" culvert outlets, looking east.

McKay Road 1 upstream of 3'x4' culvert inlet, looking north.

McKay Road 2 culvert outlet, looking west.

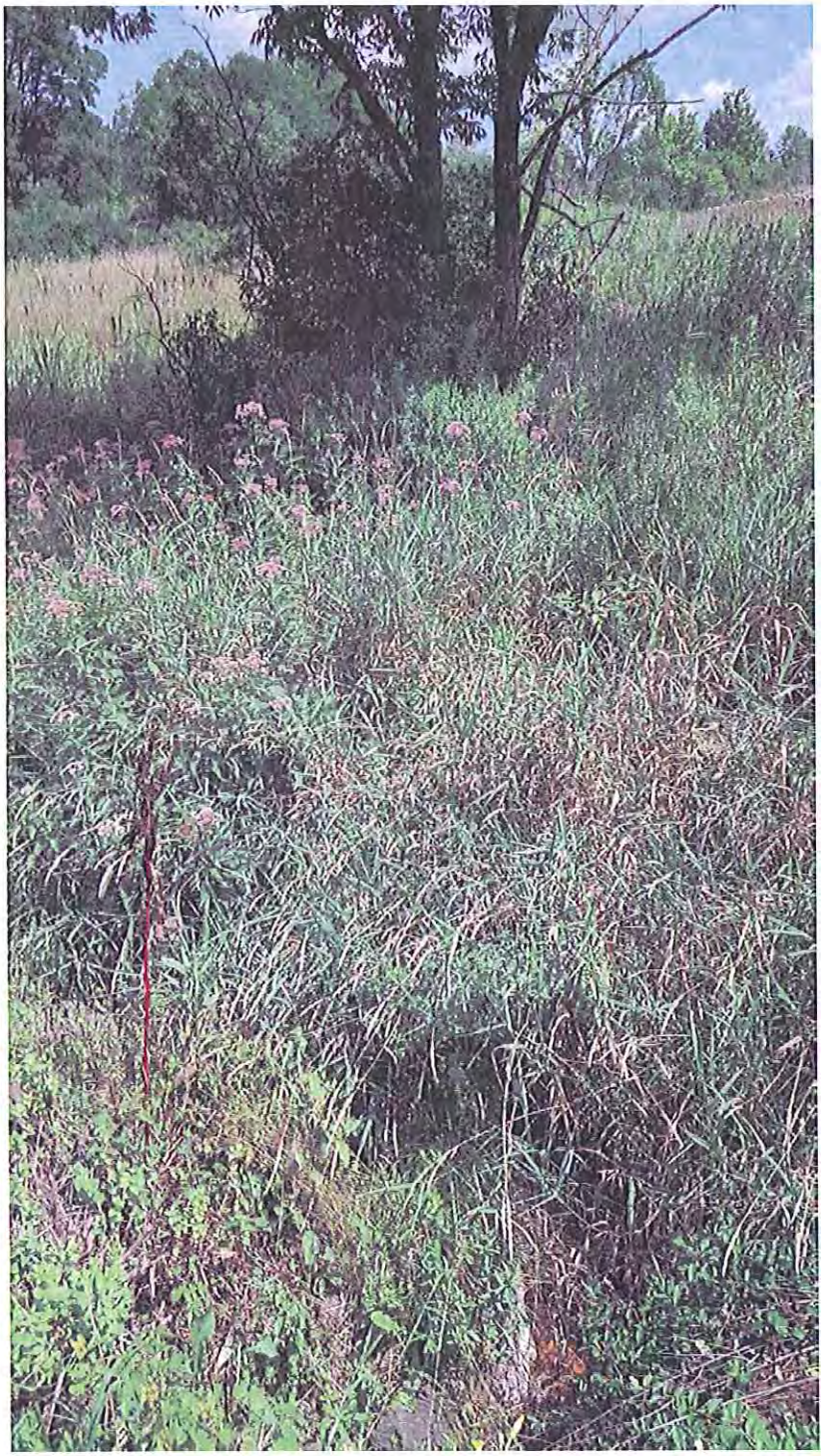

McKay Road 2 upstream of culvert inlet, looking east.

McKinney Road 4A culvert inlet, looking north.

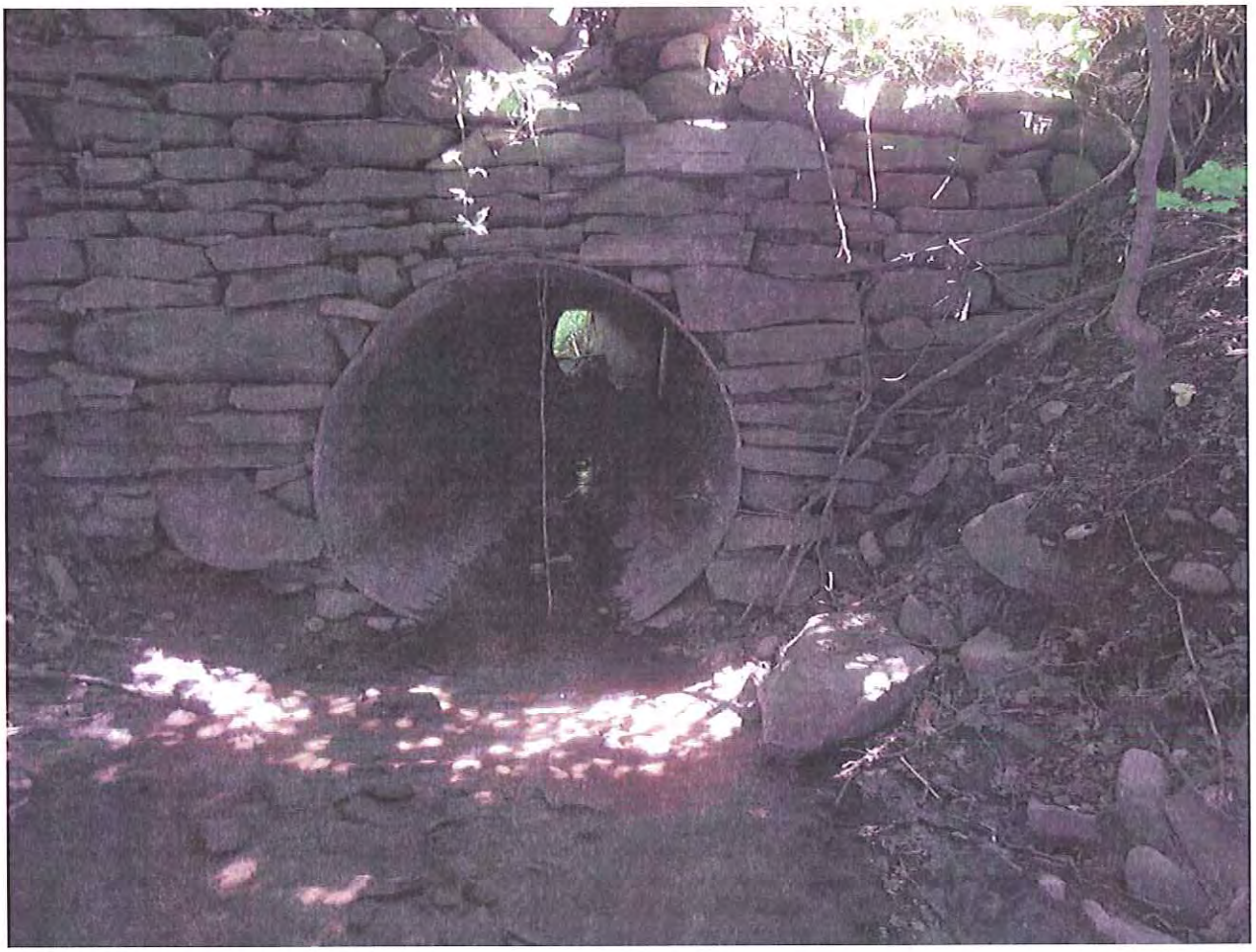

McKinney Road 4A culvert outlet, looking southeast. Note how pipe is not straight through.

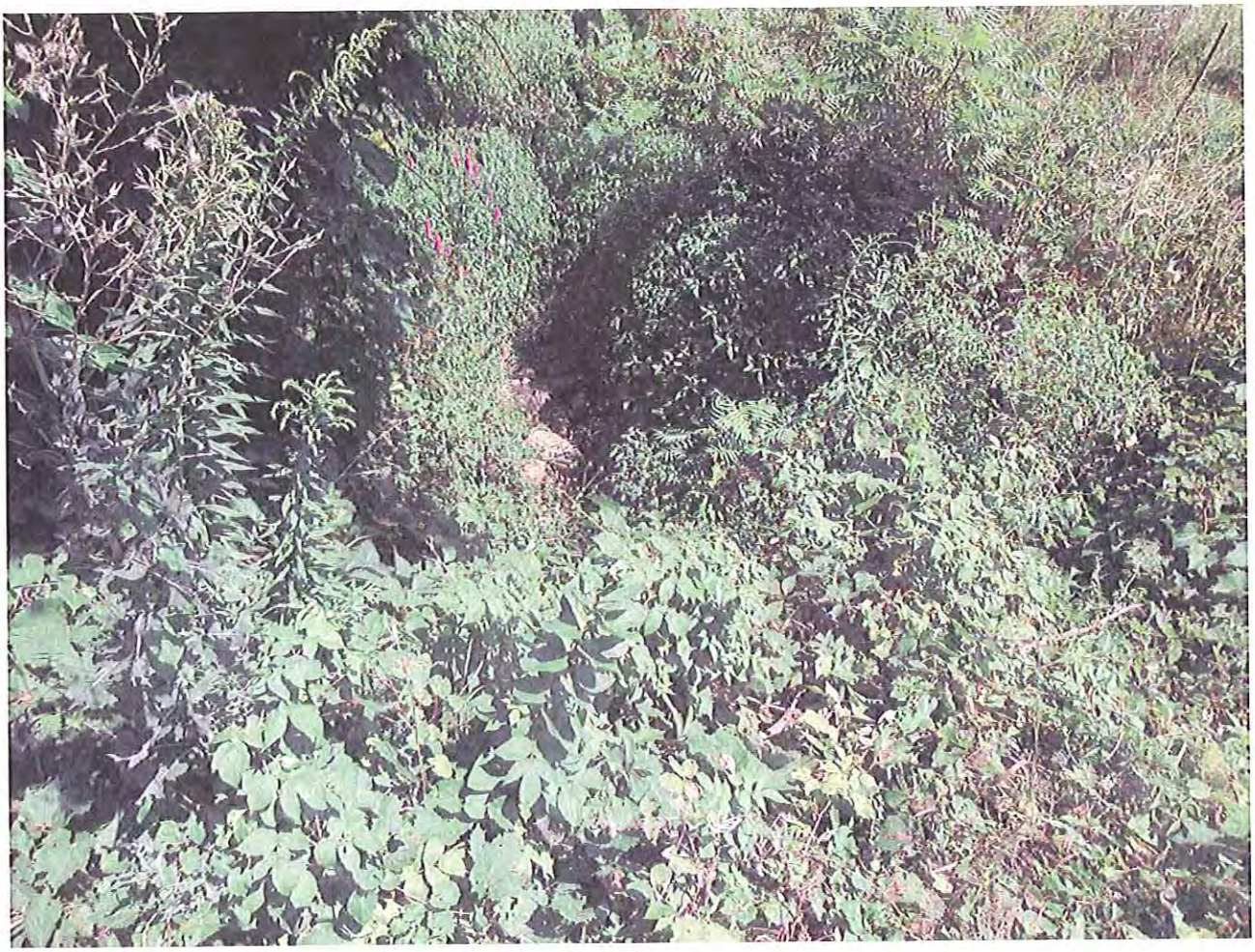

McKinney Road 4A upstream of culvert inlet, looking east.

McKinney Road 4A downstream of culvert outlet, looking northwest.

McKinney Road 4B culvert inlet, looking west.

McKinney Road 4B culvert outlet, looking east.

McKinney Road 4B upstream of culvert inlet, looking east.

McKinney Road 4B downstream of culvert outlet, looking west.

Pattersonville Road culvert inlet, looking north.

Pattersonville Road culvert outlet, looking southwest.

Pattersonville Road downstream of culvert outlet, looking northwest.

Pattersonville Road upstream of culvert inlet, looking southwest.

Shellstone Road culvert outlet, looking northwest.

Shellstone Road culvert inlet, looking southeast.

Shellstone Road upstream of culvert inlet, looking northwest.

Shellstone Road downstream of culvert outlet, looking southeast.

Strevy Lane culvert inlet, looking northeast.

Strevy Lane culvert outlet, looking southwest.

Strevy Lane downstream of culvert outlet, looking north.

Strevy Lane upstream of culvert inlet, looking south.

EXHIBIT 2
H & H ANALYSIS

Summary for Pond 14P: Proposed w/ DEC

[58] Hint: Peaked 0.28' above defined flood level

Inflow Area = 204.800 ac, 0.49% Impervious, Inflow Depth = 2.73" for 100-Year event
Inflow = 285.52 cfs @ 12.67 hrs, Volume= 46.628 af
Outflow = 285.52 cfs @ 12.67 hrs, Volume= 46.628 af, Atten= 0%, Lag= 0.0 min
Primary = 285.52 cfs @ 12.67 hrs, Volume= 46.628 af

Routing by Stor-Ind method, Time Span= 0.00-48.00 hrs, dt= 0.05 hrs
Peak Elev= 623.08' @ 12.67 hrs
Flood Elev= 622.80'

Device	Routing	Invert	Outlet Devices
#1	Primary	615.37'	**66.0" Round Culvert w/ 12.0" inside fill** L= 45.0' Ke= 0.500 Inlet / Outlet Invert= 614.37' / 613.02' S= 0.0300 '/' Cc= 0.900 n= 0.012, Flow Area= 20.81 sf
#2	Primary	622.80'	**100.0' long Sharp-Crested Rectangular Weir** 2 End Contraction(s)

Primary OutFlow Max=284.92 cfs @ 12.67 hrs HW=623.08' (Free Discharge)
└─**1=Culvert** (Inlet Controls 236.85 cfs @ 11.38 fps)
└─**2=Sharp-Crested Rectangular Weir** (Weir Controls 48.07 cfs @ 1.73 fps)

Events for Pond 14P: Proposed w/ DEC

Event	Inflow (cfs)	Primary (cfs)	Elevation (feet)	Storage (cubic-feet)
1-Year	45.72	45.72	617.37	**0**
2-Year	68.17	68.17	617.95	0
5-Year	108.55	108.55	618.89	0
10-Year	144.71	144.71	619.72	0
25-Year	198.13	198.13	621.43	0
50-Year	240.84	240.84	622.88	0
100-Year	**285.52**	**285.52**	**623.08**	0

Summary for Pond 14P: Proposed w/ DEC

[58] Hint: Peaked 0.18' above defined flood level

Inflow Area = 345.600 ac, 0.29% Impervious, Inflow Depth = 2.91" for 100-Year event
Inflow = 421.05 cfs @ 12.93 hrs, Volume= 83.920 af
Outflow = 421.05 cfs @ 12.93 hrs, Volume= 83.920 af, Atten= 0%, Lag= 0.0 min
Primary = 421.05 cfs @ 12.93 hrs, Volume= 83.920 af

Routing by Stor-Ind method, Time Span= 0.00-48.00 hrs, dt= 0.05 hrs
Peak Elev= 505.18' @ 12.93 hrs
Flood Elev= 505.00'

Device	Routing	Invert	Outlet Devices
#1	Primary	496.42'	**84.0" Round Culvert w/ 16.0" inside fill** L= 41.5' CPP, end-sectionconforming to fill, Ke= 0.500 Inlet / Outlet Invert= 495.09' / 493.85' S= 0.0299 '/' Cc= 0.900 n= 0.012, Flow Area= 33.38 sf
#2	Primary	505.00'	**100.0' long Sharp-Crested Rectangular Weir** 2 End Contraction(s)

Primary OutFlow Max=420.68 cfs @ 12.93 hrs HW=505.18' (Free Discharge)
└─**1=Culvert** (Inlet Controls 396.20 cfs @ 11.87 fps)
└─**2=Sharp-Crested Rectangular Weir** (Weir Controls 24.48 cfs @ 1.38 fps)

Events for Pond 14P: Proposed w/ DEC

Event	Inflow (cfs)	Primary (cfs)	Elevation (feet)	Storage (cubic-feet)
1-Year	76.56	76.56	498.82	**0**
2-Year	110.01	110.01	499.44	0
5-Year	169.08	169.08	500.43	0
10-Year	221.03	221.03	501.25	0
25-Year	297.29	297.29	502.61	0
50-Year	357.86	357.86	504.08	0
100-Year	**421.05**	**421.05**	**505.18**	0

Summary for Pond 16P: Proposed w/ DEC

Inflow Area = 556.800 ac, 0.18% Impervious, Inflow Depth = 2.82" for 100-Year event
Inflow = 511.05 cfs @ 13.37 hrs, Volume= 130.959 af
Outflow = 511.05 cfs @ 13.37 hrs, Volume= 130.959 af, Atten= 0%, Lag= 0.0 min
Primary = 511.05 cfs @ 13.37 hrs, Volume= 130.959 af

Routing by Stor-Ind method, Time Span= 0.00-48.00 hrs, dt= 0.05 hrs
Peak Elev= 537.40' @ 13.37 hrs
Flood Elev= 543.00'

Device	Routing	Invert	Outlet Devices
#1	Primary	524.42'	**84.0" Round Culvert w/ 17.0" inside fill** L= 84.7' CPP, end-sectionconforming to fill, Ke= 0.500 Inlet / Outlet Invert= 523.00' / 520.46' S= 0.0300 '/' Cc= 0.900 n= 0.012 Concretepipe, finished, Flow Area=32.91 sf
#2	Primary	543.00'	**100.0' long Sharp-Crested Rectangular Weir** 2 End Contraction(s)

Primary OutFlow Max=510.78 cfs @ 13.37 hrs HW=537.39' (Free Discharge)
└─**1=Culvert** (Inlet Controls 510.78 cfs @ 15.52 fps)
└─**2=Sharp-Crested Rectangular Weir** (Controls 0.00 cfs)

Events for Pond 16P: Proposed w/ DEC

Event	Inflow (cfs)	Primary (cfs)	Elevation (feet)	Storage (cubic-feet)
1-Year	87.92	87.92	527.02	**0**
2-Year	128.10	128.10	527.74	0
5-Year	199.96	199.96	528.90	0
10-Year	263.89	263.89	529.96	0
25-Year	357.92	357.92	532.16	0
50-Year	432.34	432.34	534.47	0
100-Year	**511.05**	**511.05**	**537.40**	0

Summary for Pond 10P: Proposed w/ DEC

Inflow Area = 57.600 ac, 0.00% Impervious, Inflow Depth = 2.82" for 100-Year event
Inflow = 100.94 cfs @ 12.48 hrs, Volume= 13.548 af
Outflow = 100.94 cfs @ 12.48 hrs, Volume= 13.548 af, Atten= 0%, Lag= 0.0 min
Primary = 100.94 cfs @ 12.48 hrs, Volume= 13.548 af

Routing by Stor-Ind method, Time Span= 0.00-48.00 hrs, dt= 0.05 hrs
Peak Elev= 652.90' @ 12.48 hrs
Flood Elev= 653.50'

Device	Routing	Invert	Outlet Devices
#1	Primary	648.64'	**60.0" W x 36.0" H Box Culvert w/ 7.0" inside fill** L= 40.0' Box, 10-30° wingwalls, square crown, Ke= 0.500 Inlet / Outlet Invert= 648.06' / 646.86' S= 0.0300 '/' Cc= 0.900 n= 0.013 Corrugated PE, smooth interior, Flow Area= 12.08 sf
#2	Primary	653.50'	**100.0' long Sharp-Crested Rectangular Weir** 2 End Contraction(s)

Primary OutFlow Max=100.67 cfs @ 12.48 hrs HW=652.89' (Free Discharge)
└─**1=Culvert** (Inlet Controls 100.67 cfs @ 8.33 fps)
└─**2=Sharp-Crested Rectangular Weir** (Controls 0.00 cfs)

Events for Pond 10P: Proposed w/ DEC

Event	Inflow (cfs)	Primary (cfs)	Elevation (feet)	Storage (cubic-feet)
1-Year	17.25	17.25	649.69	0
2-Year	25.27	25.27	650.00	0
5-Year	39.52	39.52	650.47	0
10-Year	52.15	52.15	650.84	0
25-Year	70.72	70.72	651.42	0
50-Year	85.49	85.49	652.07	0
100-Year	**100.94**	**100.94**	**652.90**	0

Summary for Pond 8P: Proposed w/ DEC

Inflow Area = 249.600 ac, 0.80% Impervious, Inflow Depth = 2.82" for 100-Year event
Inflow = 201.59 cfs @ 13.67 hrs, Volume= 58.706 af
Outflow = 201.59 cfs @ 13.67 hrs, Volume= 58.706 af, Atten= 0%, Lag= 0.0 min
Primary = 201.59 cfs @ 13.67 hrs, Volume= 58.706 af

Routing by Stor-Ind method, Time Span= 0.00-48.00 hrs, dt= 0.05 hrs
Peak Elev= 619.65' @ 13.67 hrs
Flood Elev= 619.85'

Device	Routing	Invert	Outlet Devices
#1	Device 4	614.09'	**60.0" Round 60" HDPE w/ 12.0" inside fill** L= 59.0' CPP, end-sectionconforming to fill, Ke= 0.500 Inlet / Outlet Invert= 613.09' / 611.32' S= 0.0300 '/' Cc= 0.900 n= 0.012, Flow Area= 16.84 sf
#2	Device 4	615.96'	**36.0" Round 36" HDPE w/ 7.0" inside fill** L= 60.3' CPP, end-sectionconforming to fill, Ke= 0.500 Inlet / Outlet Invert= 615.38' / 613.58' S= 0.0299 '/' Cc= 0.900 n= 0.013, Flow Area= 6.10 sf
#3	Primary	619.85'	**100.0' long Road** 2 End Contraction(s)
#4	Primary	608.50'	**54.0" Round Underground Pipe** L= 1,200.0' Box, 0° wingwalls, squarecrown edge, Ke= 0.700 Inlet / Outlet Invert= 608.50' / 597.50' S= 0.0092 '/' Cc= 0.900 n= 0.013 Cast iron, coated, Flow Area= 15.90 sf

Primary OutFlow Max=201.58 cfs @ 13.67 hrs HW=619.65' (Free Discharge)
- **3=Road** (Controls 0.00 cfs)
- **4=Underground Pipe** (Inlet Controls 201.58 cfs @ 12.67 fps)
  - **1=60" HDPE** (Passes < 155.20 cfs potential flow)
  - **2=36" HDPE** (Passes < 46.88 cfs potential flow)

Events for Pond 8P: Proposed w/ DEC

Event	Inflow (cfs)	Primary (cfs)	Elevation (feet)	Storage (cubic-feet)
1-Year	34.87	34.87	615.85	0
2-Year	50.68	50.68	616.29	0
5-Year	78.98	78.98	616.89	0
10-Year	104.18	104.18	617.37	0
25-Year	141.26	141.26	618.06	0
50-Year	170.62	170.62	618.73	0
100-Year	**201.59**	**201.59**	**619.65**	0

Summary for Pond 8P: Proposed w/ DEC

Inflow Area = 108.800 ac, 0.92% Impervious, Inflow Depth = 2.73" for 100-Year event
Inflow = 155.12 cfs @ 12.65 hrs, Volume= 24.771 af
Outflow = 155.12 cfs @ 12.65 hrs, Volume= 24.771 af, Atten= 0%, Lag= 0.0 min
Primary = 155.12 cfs @ 12.65 hrs, Volume= 24.771 af

Routing by Stor-Ind method, Time Span= 0.00-48.00 hrs, dt= 0.05 hrs
Peak Elev= 576.67' @ 12.65 hrs
Flood Elev= 577.50'

Device	Routing	Invert	Outlet Devices
#1	Primary	571.11'	**60.0" Round Culvert w/ 12.0" inside fill** L= 45.7' CPP, end-sectionconforming to fill, Ke= 0.500 Inlet / Outlet Invert= 570.11' / 568.74' S= 0.0300 '/' Cc= 0.900 n= 0.012 Concrete pipe, finished, Flow Area=16.84 sf
#2	Primary	577.50'	**100.0' long Sharp-Crested Rectangular Weir** 2 End Contraction(s)

Primary OutFlow Max=155.11 cfs @ 12.65 hrs HW=576.67' (Free Discharge)
└─**1=Culvert** (Inlet Controls 155.11 cfs @ 9.21 fps)
└─**2=Sharp-Crested Rectangular Weir** (Controls 0.00 cfs)

Events for Pond 8P: Proposed w/ DEC

Event	Inflow (cfs)	Primary (cfs)	Elevation (feet)	Storage (cubic-feet)
1-Year	24.77	24.77	572.53	**0**
2-Year	36.89	36.89	572.94	0
5-Year	58.90	58.90	573.59	0
10-Year	78.56	78.56	574.11	0
25-Year	107.60	107.60	574.89	0
50-Year	130.80	130.80	575.65	0
100-Year	**155.12**	**155.12**	**576.67**	0

Summary for Pond 8P: Proposed w/ DEC

Inflow Area = 313.600 ac, 0.16% Impervious, Inflow Depth = 2.73" for 100-Year event
Inflow = 470.15 cfs @ 12.59 hrs, Volume= 71.399 af
Outflow = 470.15 cfs @ 12.59 hrs, Volume= 71.399 af, Atten= 0%, Lag= 0.0 min
Primary = 470.15 cfs @ 12.59 hrs, Volume= 71.399 af

Routing by Stor-Ind method, Time Span= 0.00-48.00 hrs, dt= 0.05 hrs
Peak Elev= 660.38' @ 12.59 hrs
Flood Elev= 663.00'

Device	Routing	Invert	Outlet Devices
#1	Primary	648.98'	**84.0" Round Culvert w/ 17.0" inside fill** L= 45.0' CPP, end-sectionconforming to fill, Ke= 0.500 Inlet / Outlet Invert= 647.56' / 646.21' S= 0.0300 '/' Cc= 0.900 n= 0.012, Flow Area= 32.91 sf
#2	Primary	663.00'	**100.0' long Sharp-Crested Rectangular Weir** 2 End Contraction(s)

Primary OutFlow Max=469.64 cfs @ 12.59 hrs HW=660.36' (Free Discharge)
└─**1=Culvert** (Inlet Controls 469.64 cfs @ 14.27 fps)
└─**2=Sharp-Crested Rectangular Weir** (Controls 0.00 cfs)

Events for Pond 8P: Proposed w/ DEC

Event	Inflow (cfs)	Primary (cfs)	Elevation (feet)	Storage (cubic-feet)
1-Year	75.36	75.36	651.33	**0**
2-Year	112.15	112.15	652.02	0
5-Year	178.68	178.68	653.12	0
10-Year	238.19	238.19	654.08	0
25-Year	326.14	326.14	655.88	0
50-Year	396.45	396.45	657.86	0
100-Year	**470.15**	**470.15**	**660.38**	0

Summary for Pond 8P: Proposed w/ DEC

Inflow Area = 1,388.800 ac, 0.07% Impervious, Inflow Depth = 2.64" for 100-Year event
Inflow = 1,585.40 cfs @ 12.89 hrs, Volume= 305.885 af
Outflow = 1,585.40 cfs @ 12.89 hrs, Volume= 305.885 af, Atten= 0%, Lag= 0.0 min
Primary = 1,585.40 cfs @ 12.89 hrs, Volume= 305.885 af

Routing by Stor-Ind method, Time Span= 0.00-48.00 hrs, dt= 0.05 hrs
Peak Elev= 578.98' @ 12.89 hrs
Flood Elev= 579.00'

Device	Routing	Invert	Outlet Devices
#1	Primary	564.60'	**144.0" W x 120.0" H Box Culvert w/ 24.0" inside fill** L= 51.0' Box, 30-75° wingwalls, square crown, Ke= 0.400 Inlet / Outlet Invert= 562.60' / 561.07' S= 0.0300 '/' Cc= 0.900 n= 0.013 Corrugated PE, smooth interior, Flow Area= 96.00 sf
#2	Primary	579.00'	**100.0' long Sharp-Crested Rectangular Weir** 2 End Contraction(s)

Primary OutFlow Max=1,583.06 cfs @ 12.89 hrs HW=578.95' (Free Discharge)
└─**1=Culvert** (Inlet Controls 1,583.06 cfs @ 16.49 fps)
└─**2=Sharp-Crested Rectangular Weir** (Controls 0.00 cfs)

Events for Pond 8P: Proposed w/ DEC

Event	Inflow (cfs)	Primary (cfs)	Elevation (feet)	Storage (cubic-feet)
1-Year	235.88	235.88	567.80	**0**
2-Year	358.05	358.05	568.82	0
5-Year	583.49	583.49	570.45	0
10-Year	786.63	786.63	571.81	0
25-Year	1,088.49	1,088.49	573.86	0
50-Year	1,330.76	1,330.76	576.01	0
100-Year	**1,585.40**	**1,585.40**	**578.98**	0

Summary for Pond 8P: Proposed w/ DEC

[58] Hint: Peaked 0.24' above defined flood level

Inflow Area = 281.600 ac, 0.36% Impervious, Inflow Depth = 2.64" for 100-Year event
Inflow = 660.84 cfs @ 12.23 hrs, Volume= 62.023 af
Outflow = 660.84 cfs @ 12.23 hrs, Volume= 62.023 af, Atten= 0%, Lag= 0.0 min
Primary = 660.84 cfs @ 12.23 hrs, Volume= 62.023 af

Routing by Stor-Ind method, Time Span= 0.00-48.00 hrs, dt= 0.05 hrs
Peak Elev= 533.24' @ 12.23 hrs
Flood Elev= 533.00'

Device	Routing	Invert	Outlet Devices
#1	Primary	523.09'	**96.0" W x 84.0" H Box Culvert w/ 17.0" inside fill** L= 122.0' Box, 30-75° wingwalls, squarecrown, Ke= 0.400 Inlet / Outlet Invert= 521.67' / 518.01' S= 0.0300 '/' Cc= 0.900 n= 0.013, Flow Area= 44.67 sf
#2	Primary	533.00'	**100.0' long Sharp-Crested Rectangular Weir** 2 End Contraction(s)

Primary OutFlow Max=655.94 cfs @ 12.23 hrs HW=533.23' (Free Discharge)
└─**1=Culvert** (Inlet Controls 620.77 cfs @ 13.90 fps)
└─**2=Sharp-Crested Rectangular Weir** (Weir Controls 35.17 cfs @ 1.56 fps)

Events for Pond 8P: Proposed w/ DEC

Event	Inflow (cfs)	Primary (cfs)	Elevation (feet)	Storage (cubic-feet)
1-Year	100.94	100.94	525.47	**0**
2-Year	153.15	153.15	526.23	0
5-Year	247.18	247.18	527.41	0
10-Year	331.43	331.43	528.34	0
25-Year	456.18	456.18	529.97	0
50-Year	556.05	556.05	531.81	0
100-Year	**660.84**	**660.84**	**533.24**	0

Summary for Pond 8P: Proposed w/ DEC

Inflow Area = 588.800 ac, 0.17% Impervious, Inflow Depth = 2.64" for 100-Year event
Inflow = 715.37 cfs @ 12.80 hrs, Volume= 129.684 af
Outflow = 715.37 cfs @ 12.80 hrs, Volume= 129.684 af, Atten= 0%, Lag= 0.0 min
Primary = 715.37 cfs @ 12.80 hrs, Volume= 129.684 af

Routing by Stor-Ind method, Time Span= 0.00-48.00 hrs, dt= 0.05 hrs
Peak Elev= 669.21' @ 12.80 hrs
Flood Elev= 669.50'

Device	Routing	Invert	Outlet Devices
#1	Primary	661.77'	**144.0" W x 84.0" H Box Culvert w/ 16.0" inside fill** L= 22.0' Box, 30-75° wingwalls, square crown, Ke= 0.400 Inlet / Outlet Invert= 660.44' / 659.78' S= 0.0300 '/' Cc= 0.900 n= 0.012 Concrete pipe, finished, Flow Area= 68.00 sf
#2	Primary	669.50'	**100.0' long Sharp-Crested Rectangular Weir** 2 End Contraction(s)

Primary OutFlow Max=715.33 cfs @ 12.80 hrs HW=669.21' (Free Discharge)
└─**1=Culvert** (Barrel Controls 715.33 cfs @ 10.68 fps)
└─**2=Sharp-Crested Rectangular Weir** (Controls 0.00 cfs)

Events for Pond 8P: Proposed w/ DEC

Event	Inflow (cfs)	Primary (cfs)	Elevation (feet)	Storage (cubic-feet)
1-Year	106.59	106.59	663.66	**0**
2-Year	162.16	162.16	664.26	0
5-Year	263.65	263.65	665.30	0
10-Year	355.22	355.22	666.20	0
25-Year	491.31	491.31	667.42	0
50-Year	600.55	600.55	668.32	0
100-Year	**715.37**	**715.37**	**669.21**	0

Summary for Pond 9P: Proposed w/ DEC

Inflow Area = 134.400 ac, 7.44% Impervious, Inflow Depth = 2.91" for 100-Year event
Inflow = 155.54 cfs @ 13.00 hrs, Volume= 32.636 af
Outflow = 155.54 cfs @ 13.00 hrs, Volume= 32.636 af, Atten= 0%, Lag= 0.0 min
Primary = 155.54 cfs @ 13.00 hrs, Volume= 32.636 af

Routing by Stor-Ind method, Time Span= 0.00-48.00 hrs, dt= 0.05 hrs
Peak Elev= 379.00' @ 13.00 hrs
Flood Elev= 381.50'

Device	Routing	Invert	Outlet Devices
#1	Primary	373.42'	**60.0" Round Culvert w/ 12.0" inside fill** L= 116.2' CPP, end-sectionconforming to fill, Ke= 0.500 Inlet / Outlet Invert= 372.42' / 368.93' S= 0.0300 '/' Cc= 0.900 n= 0.012, Flow Area= 16.84 sf
#2	Primary	381.50'	**100.0' long Sharp-Crested Rectangular Weir** 2 End Contraction(s)

Primary OutFlow Max=155.52 cfs @ 13.00 hrs HW=378.99' (Free Discharge)
└─**1=Culvert** (Inlet Controls 155.52 cfs @ 9.24 fps)
└─**2=Sharp-Crested Rectangular Weir** (Controls 0.00 cfs)

Events for Pond 9P: Proposed w/ DEC

Event	Inflow (cfs)	Primary (cfs)	Elevation (feet)	Storage (cubic-feet)
1-Year	28.32	28.32	374.96	0
2-Year	40.63	40.63	375.36	0
5-Year	62.35	62.35	375.99	0
10-Year	81.58	81.58	376.50	0
25-Year	109.77	109.77	377.26	0
50-Year	132.16	132.16	378.01	0
100-Year	**155.54**	**155.54**	**379.00**	0

EXHIBIT 3
DRAWINGS

JME
John M. McDonald Engineering
a member of PRIME Group®

New York Office • 7 South Church Street • Schenectady, New York 12305
Ph: 518 382 1774 Fax: 518 382 1776
www.mcdonaldengineers.com • www. primeeng.com

MONTGOMERY COUNTY
CULVERT REPLACEMENT

CONTRACT NO. 3 - TOWN OF AMSTERDAM CULVERT REPLACEMENT

CONTRACT NO. 4 - TOWN OF FLORIDA CULVERT REPLACEMENT

COUNTY LEGISLATURE

Matthew L. Ossenfort	County Executive
Martin P. Kelly	Legislator District 1
Brian Sweet	Legislator District 2
Roy S. Dimond	Legislator District 3
Robert Headwell	Legislator District 4
Dan Wilson	Legislator District 5
John M. Duchessi	Legislator District 6
Michael Pepe	Legislator District 7
Joseph M. Isabel	Legislator District 8
Robert A. Purtell	Legislator District 9
Bart A. Tessiero	Town of Amsterdam Highway Superintendent
William Weller	Town of Florida Highway Superintendent
Eric Mead	Commissioner of Public Works
Cheryl A. Reese	Clerk of the Legislature

JME
John M. McDonald Engineering
a member of PRIME Group®

New York Office
7 South Church Street Schenectady, New York 12305
Ph: 518 382 1774 Fax: 518 382 1776
www.mcdonaldengineers.com www.primeeng.com

LICENSED PROFESSIONAL ENGINEER
JOHN M. McDONALD
NO. 54506
STATE OF NEW YORK

Review Issue: October 2016
GOSR Review Issue: December 2016
Environmental Review Issue: February 2017

REF. NO. 134-1601-000

PROJECT NO. 134-1601

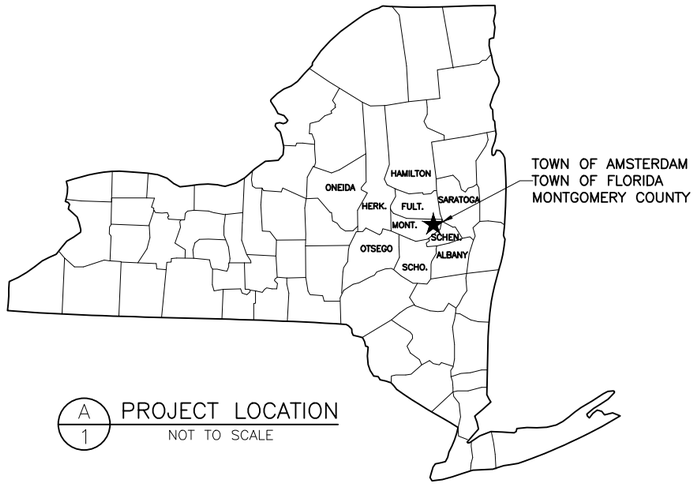

A/1 PROJECT LOCATION
NOT TO SCALE

GENERAL CONTRACT DRAWING NOTES:

1. PROJECT SITE PLANS ARE BASED ON SURVEYS BY JOHN M. MCDONALD ENGINEERING.

2. CONTRACTOR MUST COORDINATE WORK WITH MONTGOMERY COUNTY DPW AND MINIMIZE INCONVENIENCES.

3. CONTRACTOR SHALL BE RESPONSIBLE FOR REPAIR OF ANY DAMAGE TO THE FACILITIES AND APPURTENANCES RESULTING FROM THE CONTRACTOR'S WORK AT NO COST TO OWNER.

4. ALL PRECAUTIONS SHALL BE TAKEN TO PROTECT THE ENVIRONMENT IN ACCORDANCE WITH STATE, FEDERAL AND LOCAL REGULATIONS AND AS SPECIFIED IN THE CONTRACT DOCUMENTS.

5. CONTRACTOR SHALL CONTACT DIG SAFELY NEW YORK PRIOR TO COMMENCING WORK TO DETERMINE LOCATIONS OF UNDERGROUND UTILITIES. EXISTING UTILITIES ARE SHOWN IN THEIR RELATIVE POSITIONS AND ARE FOR INFORMATION ONLY. CONTRACTOR SHALL BE RESPONSIBLE FOR REPAIR OF ANY DAMAGE TO FACILITIES RESULTING FROM THE CONTRACTORS WORK AT NO COST TO OWNER.

6. CONTRACTOR SHALL RESTORE ALL LAWNS, DRIVEWAYS, ROADS, SHOULDERS, FENCES ETC. TO A CONDITION AT LEAST AS GOOD AS THEY WERE PRIOR TO CONSTRUCTION. DAMAGE SHALL BE REPAIRED AT CONTRACTOR'S EXPENSE.

7. NO WORK, STORAGE OR TRESPASS SHALL BE PERMITTED BEYOND THE BOUNDARIES OF OWNER'S EASEMENTS OR PROPERTY.

8. CONTRACTOR IS RESPONSIBLE FOR ALL TRAFFIC CONTROL, DUST CONTROL, AND PROTECTION OF PUBLIC FROM HAZARDS ASSOCIATED WITH THIS WORK DURING WORKING AND NON-WORKING HOURS.

9. CONTRACTOR SHALL SUPPORT ALL UTILITIES & STRUCTURES WHERE NECESSARY DUE TO WORK OF THIS CONTRACT.

10. EXTENT OF WORK IS INDICATED ON CONTRACT DRAWINGS AND SPECIFICATIONS. EACH CONTRACTOR IS RESPONSIBLE TO REVIEW EXTENT OF WORK BY OTHERS AND COORDINATE THEIR OWN WORK WITH WORK BY OTHER CONTRACTORS.

DRAWING INDEX

SHEET #	TITLE	REFERENCE NO.	REV. NO.
	CONTRACT NO. 3 – TOWN OF AMSTERDAM CULVERT REPLACEMENT		
	CONTRACT NO. 4 – TOWN OF FLORIDA CULVERT REPLACEMENT		
	GENERAL		
1	COVER	134-1601-000	00
2	INDEX & PROJECT LOCATION	134-1601-010	00
3	CULVERT LOCATION MAP	134-1601-020	00
4	EROSION CONTROL DETAILS	134-1601-030	00
	SECTION A – TOWN OF AMSTERDAM		
A1	MCKAY ROAD 1 OVERALL SITE PLAN	134-1601-100	00
A2	MCKAY ROAD 1 SITE PLAN	134-1601-110	00
A3	MCKAY ROAD 1 PROFILES	134-1601-120	00
A4	MCKAY ROAD 1 EXTENDED PROFILE	134-1601-130	00
A5	MCKAY ROAD 1 CROSS SECTIONS	134-1601-140	00
A6	MCKAY ROAD 2 SITE PLAN	134-1601-150	00
A7	MCKAY ROAD 2 PROFILE	134-1601-160	00
A8	MCKAY ROAD 2 CROSS SECTIONS	134-1601-170	00
	SECTION B – TOWN OF FLORIDA		
B1	BULLSHEAD ROAD SITE PLAN	134-1601-200	00
B2	BULLSHEAD ROAD PROFILE	134-1601-203	00
B3	BULLSHEAD ROAD CROSS SECTIONS	134-1601-206	00
B4	FORT HUNTER ROAD SITE PLAN	134-1601-210	00
B5	FORT HUNTER ROAD PROFILE	134-1601-213	00
B6	FORT HUNTER ROAD CROSS SECTIONS	134-1601-216	00
B7	HARTLEY ROAD SITE PLAN	134-1601-220	00
B8	HARTLEY ROAD PROFILE	134-1601-223	00
B9	HARTLEY ROAD CROSS SECTIONS	134-1601-226	00
B10	LANGLEY ROAD OVERALL SITE PLAN	134-1601-230	00
B11	LANGLEY ROAD SITE PLAN	134-1601-233	00
B12	LANGLEY ROAD PROFILE	134-1601-236	00
B13	LANGLEY ROAD EXTENDED PROFILE	134-1601-237	00
B14	LANGLEY ROAD CROSS SECTIONS	134-1601-239	00
B15	MCKINNEY ROAD 4A SITE PLAN	134-1601-240	00
B16	MCKINNEY ROAD 4A PROFILE	134-1601-243	00
B17	MCKINNEY ROAD 4A CROSS SECTIONS	134-1601-246	00
B18	MCKINNEY ROAD 4B SITE PLAN	134-1601-250	00
B19	MCKINNEY ROAD 4B PROFILE	134-1601-253	00
B20	MCKINNEY ROAD 4B CROSS SECTIONS	134-1601-256	00
B21	PATTERSONVILLE ROAD SITE PLAN	134-1601-260	00
B22	PATTERSONVILLE ROAD PROFILE	134-1601-263	00
B23	PATTERSONVILLE ROAD CROSS SECTIONS	134-1601-266	00
B24	SHELLSTONE ROAD SITE PLAN	134-1601-270	00
B25	SHELLSTONE ROAD PROFILE	134-1601-273	00
B26	SHELLSTONE ROAD CROSS SECTIONS	134-1601-276	00
B27	STREVY LANE SITE PLAN	134-1601-280	00
B28	STREVY LANE PROFILE	134-1601-283	00
B29	STREVY LANE CROSS SECTIONS	134-1601-286	00
	SECTION C – DETAILS		
C1	CONCRETE DETAILS	134-1601-300	00
C2	PAVING DETAILS	134-1601-310	00
C3	STORM SEWER DETAILS	134-1601-320	00
C4	TRENCH DETAILS	134-1601-330	00

NO.	DATE	REVISION	BY
00	10/2016	ORIGINAL ISSUE	ATB
01	12/28/16	GOSR REVIEW ISSUE	BSN
02	2/24/17	ENVIRONMENTAL REVIEW ISSUE	BSN

JME
John M. McDonald Engineering, P.C.
a member of PRIME Group

New York Office
7 South Church Street Schenectady, New York 12305
Ph: 518 382 1774 Fax: 518 382 1776
www.mcdonaldengineers.com www.primeeng.com

PROJ. ENGR.: ATB | DRAWN BY: BSN | CHECKED BY: JMM

LICENSED PROFESSIONAL ENGINEER JOHN M. McDONALD NO. 54586 STATE OF NEW YORK

UNAUTHORIZED ALTERATIONS TO THIS DOCUMENT IS A VIOLATION OF SECTION 7209 SUBDIVISION 2 OF NEW YORK STATE EDUCATION LAW

MONTGOMERY COUNTY

CULVERT REPLACEMENT

CONTRACT NO. 3 - TOWN OF AMSTERDAM CULVERT REPLACEMENT
CONTRACT NO. 4 - TOWN OF FLORIDA CULVERT REPLACEMENT

SHEET TITLE:

INDEX & PROJECT LOCATION

SCALE: AS SHOWN

FILE NO.: 134-1601-010

DATE: OCTOBER 2016

SHEET NO.: 2

NO.	DATE	REVISION	BY
00	10/2016	ORIGINAL ISSUE	ATB
01	12/28/16	GOSR REVIEW ISSUE	BSN
02	2/24/17	ENVIRONMENTAL REVIEW ISSUE	BSN

JME
John M. McDonald Engineering
a member of PRIME Group®

New York Office
7 South Church Street Schenectady, New York 12305
Ph: 518 382 1774 Fax: 518 382 1776
www.mcdonaldengineers.com www.primeeng.com

PROJ. ENGR.: ATB | DRAWN BY: BSN | CHECKED BY: JMM

LICENSED PROFESSIONAL ENGINEER JOHN M. McDONALD NO. 54506 STATE OF NEW YORK

UNAUTHORIZED ALTERATIONS TO THIS DOCUMENT IS A VIOLATION OF SECTION 7209 SUBDIVISION 2 OF NEW YORK STATE EDUCATION LAW

MONTGOMERY COUNTY

CULVERT REPLACEMENT

CONTRACT NO. 3 - TOWN OF AMSTERDAM CULVERT REPLACEMENT
CONTRACT NO. 4 - TOWN OF FLORIDA CULVERT REPLACEMENT

SHEET TITLE:

CULVERT LOCATION MAP

SCALE: AS SHOWN

FILE NO.: 134-1601-020

DATE: OCTOBER 2016

SHEET NO.: 3

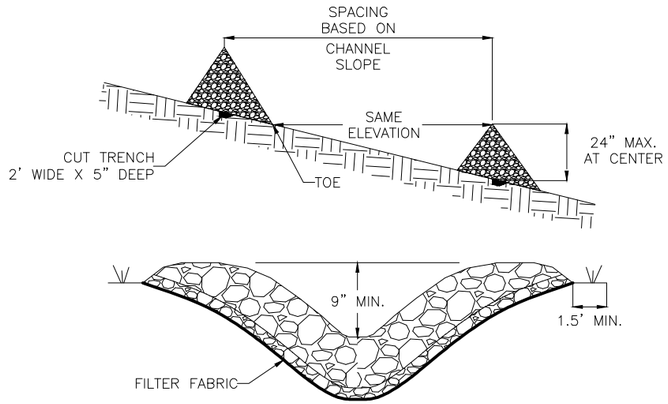

A/4 CHECK DAM DETAILS

NOT TO SCALE

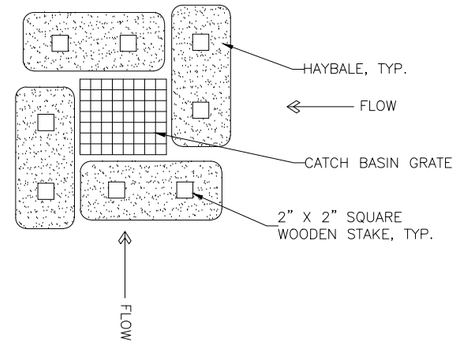

B/4 STRUCTURE EROSION CONTROL

NOT TO SCALE

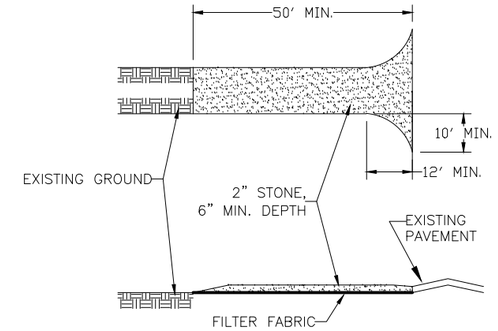

C/4 STABILIZED CONSTRUCTION ENTRANCE

NOT TO SCALE

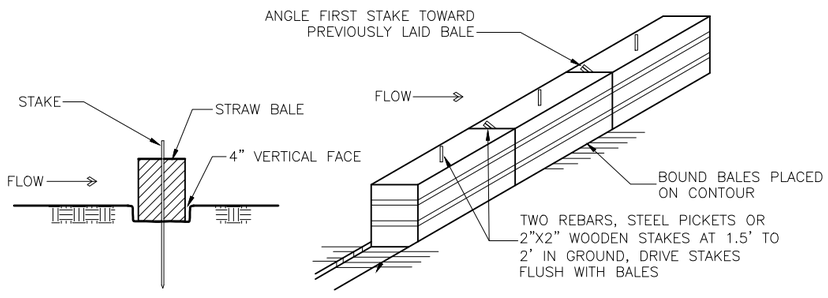

D/4 STRAW BALE DETAILS

NOT TO SCALE

SOIL EROSION AND STABILIZATION

1. DRAINAGE AREA NO MORE THAN 1/4 ACRE PER 100' OF STRAW BALE DIKE FOR SLOPES LESS THAN 25%.
2. BALES SHALL BE PLACED AT THE TOE OF SLOPE OR ON THE CONTOUR AND IN A ROW WITH ENDS TIGHTLY ABUTTING THE ADJACENT BALES.
3. EACH BALE SHALL BE EMBEDDED IN THE SOIL A MINIMUM OF 4 INCHES, AND PLACED SO THE BINDINGS ARE HORIZONTAL.
4. BALES SHALL BE SECURELY ANCHORED IN PLACE BY EITHER TWO STAKES OR RE-BARS DRIVENTHROUGH THE BALE. THE FIRST STAKE IN EACH BALE SHALL BE DRIVEN TOWARD THE PREVIOUSLY LAID BALE AT AN ANGLE TO FORCE THE BALES TOGETHER. STAKES SHALL BE DRIVEN FLUSH WITH THE BALE.
5. INSPECTION SHALL BE FREQUENT AND REPAIR REPLACEMENT SHALL BE MADE PROMPTLY AS NEEDED.
6. BALES SHALL BE REMOVED WHEN THEY HAVE SERVED THEIR USEFULNESS SO AS NOT TO BLOCK OR IMPEDE STORM FLOW OR DRAINAGE.

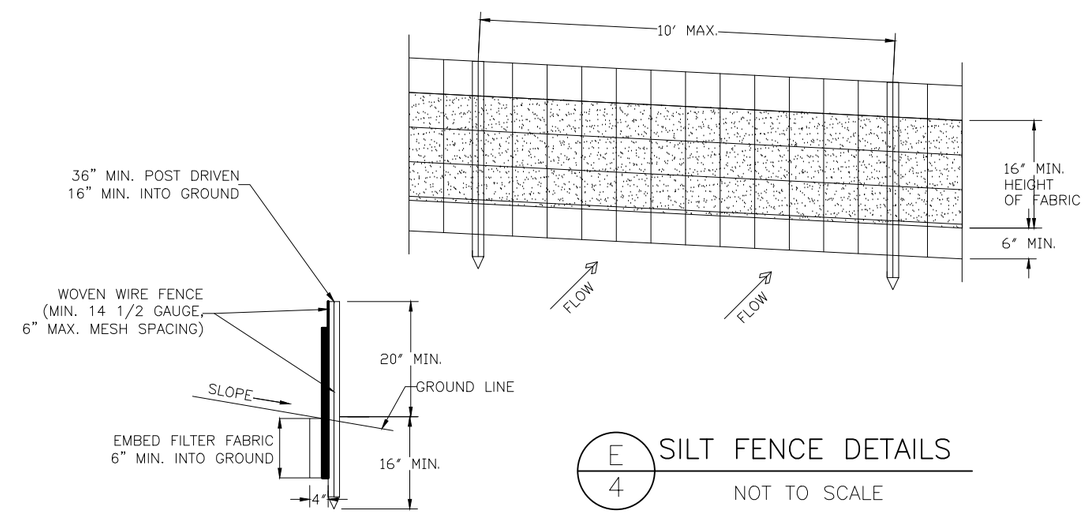

E/4 SILT FENCE DETAILS

NOT TO SCALE

NO.	DATE	REVISION	BY
00	10/2016	ORIGINAL ISSUE	ATB
01	12/28/16	GOSR REVIEW ISSUE	BSN
02	2/24/17	GOSR REVIEW ISSUE	BSN

JOHN M. MCDONALD ENGINEERING, P.C.
7 South Church Street Schenectady, New York 12305
Ph: 518 382 1774 Fax: 518 382 1776 www.mcdonaldengineers.com

PROJ. ENGR.: ATB | DRAWN BY: BSN | CHECKED BY: JMM

UNAUTHORIZED ALTERATIONS TO THIS DOCUMENT IS A VIOLATION OF SECTION 7209 SUBDIVISION 2 OF NEW YORK STATE EDUCATION LAW

MONTGOMERY COUNTY

CULVERT REPLACEMENT

CONTRACT NO. 3 - TOWN OF AMSTERDAM CULVERT REPLACEMENT
CONTRACT NO. 4 - TOWN OF FLORIDA CULVERT REPLACEMENT

SHEET TITLE:

EROSION CONTROL DETAILS

SCALE: AS SHOWN

FILE NO.: 134-1601-030

DATE: OCTOBER 2016

SHEET NO.: 4

NO.	DATE	REVISION	BY
00	10/2016	ORIGINAL ISSUE	BSN
01	12/28/16	GOSR REVIEW ISSUE	BSN
02	2/24/17	GOSR REVIEW ISSUE	BSN

JME
John M. McDonald Engineering, P.C.
a member of PRIME Group®

New York Office
7 South Church Street Schenectady, New York 12305
Ph: 518 382 1774 Fax: 518 382 1776
www.mcdonaldengineers.com www.primeeng.com

PROJ. ENGR.: ATB | DRAWN BY: BSN | CHECKED BY: JMM

LICENSED PROFESSIONAL ENGINEER JOHN M. McDONALD NO. 54508 STATE OF NEW YORK

UNAUTHORIZED ALTERATIONS TO THIS DOCUMENT IS A VIOLATION OF SECTION 7209 SUBDIVISION 2 OF NEW YORK STATE EDUCATION LAW

MONTGOMERY COUNTY

CULVERT REPLACEMENT

CONTRACT NO. 3 - TOWN OF AMSTERDAM CULVERT REPLACEMENT
CONTRACT NO. 4 - TOWN OF FLORIDA CULVERT REPLACEMENT

SHEET TITLE:

MCKAY ROAD OVERALL SITE PLAN

SCALE: AS SHOWN

FILE NO.: 134-1601-100

DATE: OCTOBER 2016

SHEET NO.: A1

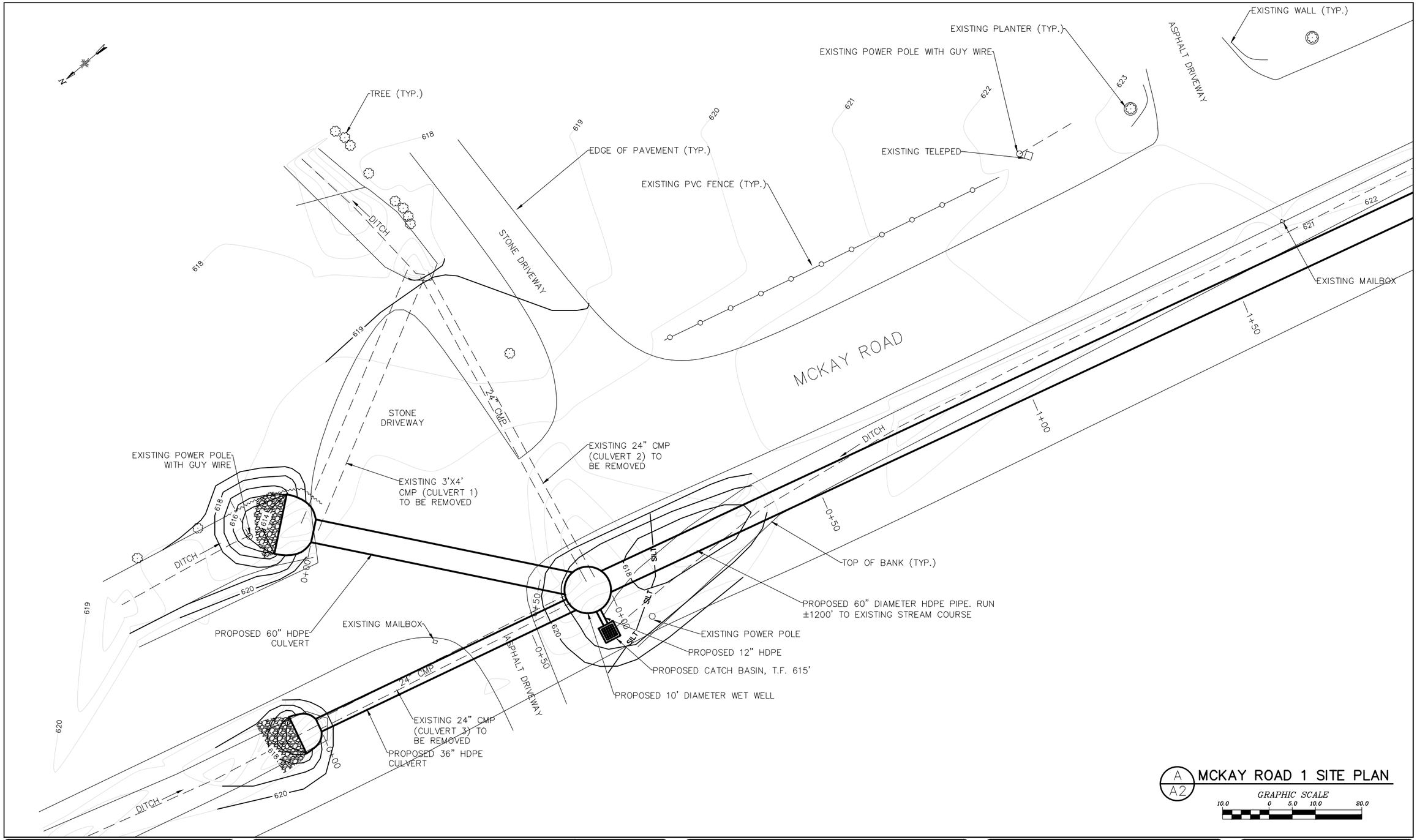

A / A2 MCKAY ROAD 1 SITE PLAN

GRAPHIC SCALE
10.0 0 5.0 10.0 20.0

NO.	DATE	REVISION	BY
00	10/2016	ORIGINAL ISSUE	DPC
01	12/28/16	GOSR REVIEW ISSUE	BSN
02	2/24/17	ENVIRONMENTAL REVIEW ISSUE	BSN

JME
John M. McDonald Engineering, P.C.
a member of PRIME Group®

New York Office
7 South Church Street Schenectady, New York 12305
Ph: 518 382 1774 Fax: 518 382 1776
www.mcdonaldengineers.com www.primeeng.com

PROJ. ENGR.: DPC | DRAWN BY: BSN | CHECKED BY: JMM

LICENSED PROFESSIONAL ENGINEER JOHN M. McDONALD NO. 54506 STATE OF NEW YORK

UNAUTHORIZED ALTERATIONS TO THIS DOCUMENT IS A VIOLATION OF SECTION 7209 SUBDIVISION 2 OF NEW YORK STATE EDUCATION LAW

MONTGOMERY COUNTY

CULVERT REPLACEMENT

CONTRACT NO. 3 - TOWN OF AMSTERDAM CULVERT REPLACEMENT
CONTRACT NO. 4 - TOWN OF FLORIDA CULVERT REPLACEMENT

SHEET TITLE:

MCKAY ROAD 1
SITE PLAN

SCALE: AS SHOWN

FILE NO.: 134-1601-110

DATE: OCTOBER 2016

SHEET NO.: A2

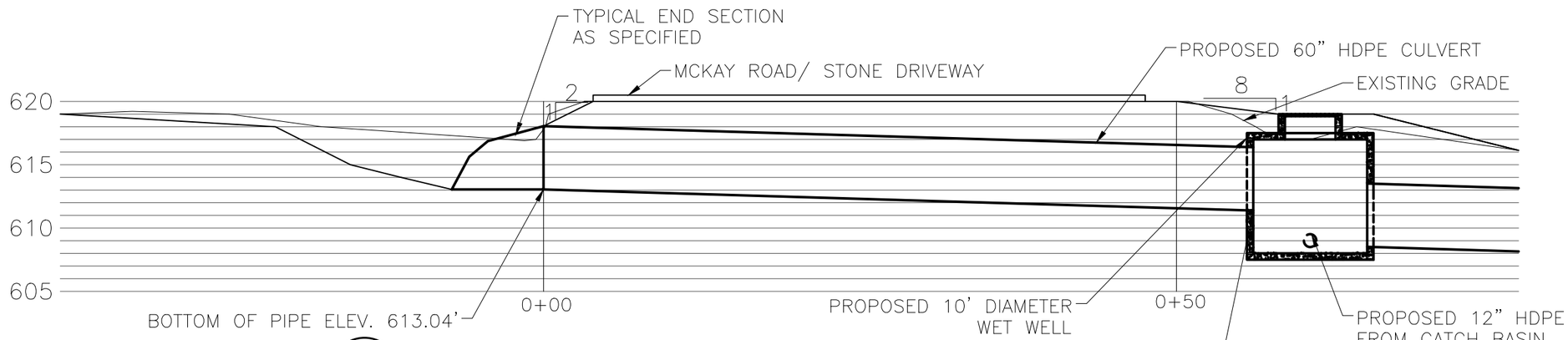

A / A3 MCKAY ROAD 1 PROPOSED 60" CULVERT PROFILE

GRAPHIC SCALE
5.0 0 2.5 5.0 10.0

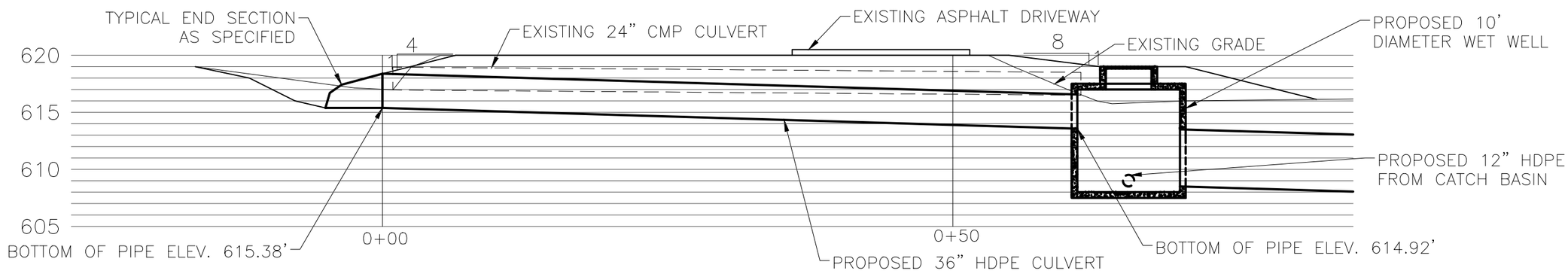

B / A3 MCKAY ROAD 1 36" CULVERT PROFILE

GRAPHIC SCALE
5.0 0 2.5 5.0 10.0

NO.	DATE	REVISION	BY
00	10/2016	ORIGINAL ISSUE	DPC
01	12/28/16	GOSR REVIEW ISSUE	BSN
02	2/24/17	ENVIRONMENTAL REVIEW ISSUE	BSN

JME
John M. McDonald Engineering, P.C.
a member of PRIME Group

New York Office
7 South Church Street Schenectady, New York 12305
Ph: 518 382 1774 Fax: 518 382 1776
www.mcdonaldengineers.com www.primeeng.com

PROJ. ENGR.: DPC | DRAWN BY: BSN | CHECKED BY: JMM

LICENSED PROFESSIONAL ENGINEER JOHN M. McDONALD NO. 54506 STATE OF NEW YORK

UNAUTHORIZED ALTERATIONS TO THIS DOCUMENT IS A VIOLATION OF SECTION 7209 SUBDIVISION 2 OF NEW YORK STATE EDUCATION LAW

MONTGOMERY COUNTY

CULVERT REPLACEMENT

CONTRACT NO. 3 - TOWN OF AMSTERDAM CULVERT REPLACEMENT
CONTRACT NO. 4 - TOWN OF FLORIDA CULVERT REPLACEMENT

SHEET TITLE:

MCKAY ROAD 1 PROFILES

SCALE: AS SHOWN

FILE NO.: 134-1601-120

DATE: OCTOBER 2016

SHEET NO.: A3

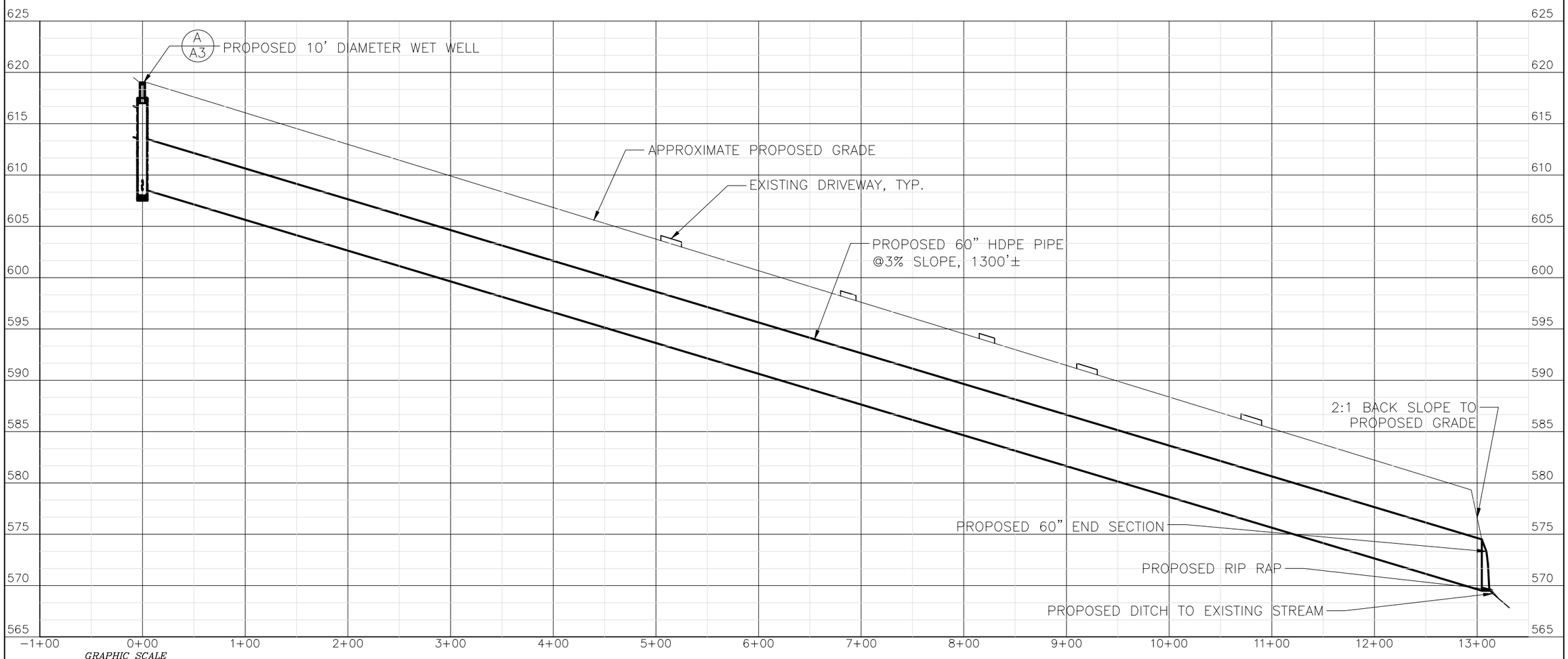

GRAPHIC SCALE

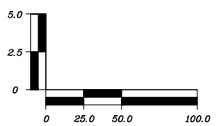

A
A4

MCKAY ROAD 1 EXTENDED PROFILE

NO.	DATE	REVISION	BY
00	10/2016	ORIGINAL ISSUE	BSN
01	12/28/16	GOSR REVIEW ISSUE	BSN
02	2/24/17	ENVIRONMENTAL REVIEW ISSUE	BSN

JME
John M. McDonald Engineering, P.C.
a member of PRIME Group

New York Office
7 South Church Street Schenectady, New York 12305
Ph: 518 382 1774 Fax: 518 382 1776
www.mcdonaldengineers.com www.primeeng.com

PROJ. ENGR.: ATB | DRAWN BY: BSN | CHECKED BY: JMM

LICENSED PROFESSIONAL ENGINEER JOHN M. McDONALD NO. 54506 STATE OF NEW YORK

UNAUTHORIZED ALTERATIONS TO THIS DOCUMENT IS A VIOLATION OF SECTION 7209 SUBDIVISION 2 OF NEW YORK STATE EDUCATION LAW

MONTGOMERY COUNTY

CULVERT REPLACEMENT

CONTRACT NO. 3 - TOWN OF AMSTERDAM CULVERT REPLACEMENT
CONTRACT NO. 4 - TOWN OF FLORIDA CULVERT REPLACEMENT

SHEET TITLE:

MCKAY ROAD 1 EXTENDED PROFILE

SCALE: AS SHOWN

FILE NO.: 134-1601-130

DATE: OCTOBER 2016

SHEET NO.: A4

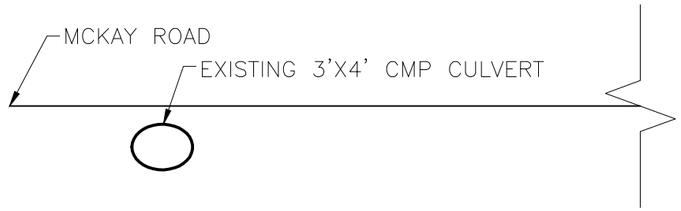

A/A5 EXISTING 3'X4' CULVERT CROSS SECTION

DO NOT SCALE

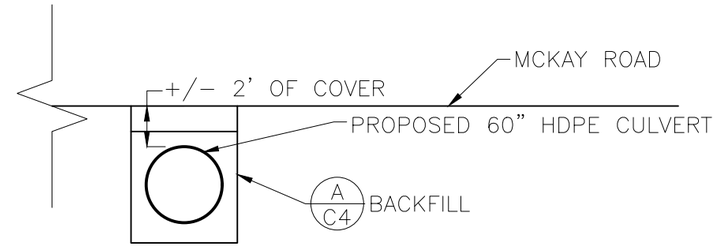

B/A5 PROPOSED 60" CULVERT CROSS SECTION

DO NOT SCALE

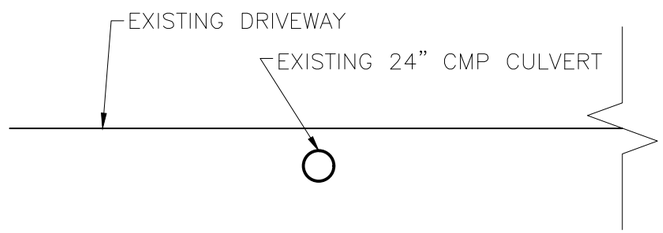

C/A5 EXISTING 24" CULVERT CROSS SECTION

DO NOT SCALE

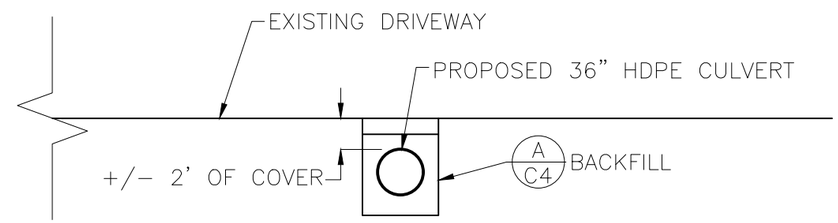

D/A5 PROPOSED 36" CULVERT CROSS SECTION

DO NOT SCALE

NO.	DATE	REVISION	BY
00	10/2016	ORIGINAL ISSUE	DPC
01	12/28/16	GOSR REVIEW ISSUE	BSN
02	2/24/17	ENVIRONMENTAL REVIEW ISSUE	BSN

JME
John M. McDonald Engineering, P.C.
a member of PRIMEES Group®

New York Office
7 South Church Street Schenectady, New York 12305
Ph: 518 382 1774 Fax: 518 382 1776
www.mcdonaldengineers.com www.primeeng.com

PROJ. ENGR.: DPC | DRAWN BY: BSN | CHECKED BY: JMM

LICENSED PROFESSIONAL ENGINEER JOHN M. McDONALD NO. 54506 STATE OF NEW YORK

UNAUTHORIZED ALTERATIONS TO THIS DOCUMENT IS A VIOLATION OF SECTION 7209 SUBDIVISION 2 OF NEW YORK STATE EDUCATION LAW

MONTGOMERY COUNTY

CULVERT REPLACEMENT

CONTRACT NO. 3 - TOWN OF AMSTERDAM CULVERT REPLACEMENT
CONTRACT NO. 4 - TOWN OF FLORIDA CULVERT REPLACEMENT

SHEET TITLE:

MCKAY ROAD 1 CROSS SECTIONS

SCALE: AS SHOWN

FILE NO.: 134-1601-140

DATE: OCTOBER 2016

SHEET NO.: A5

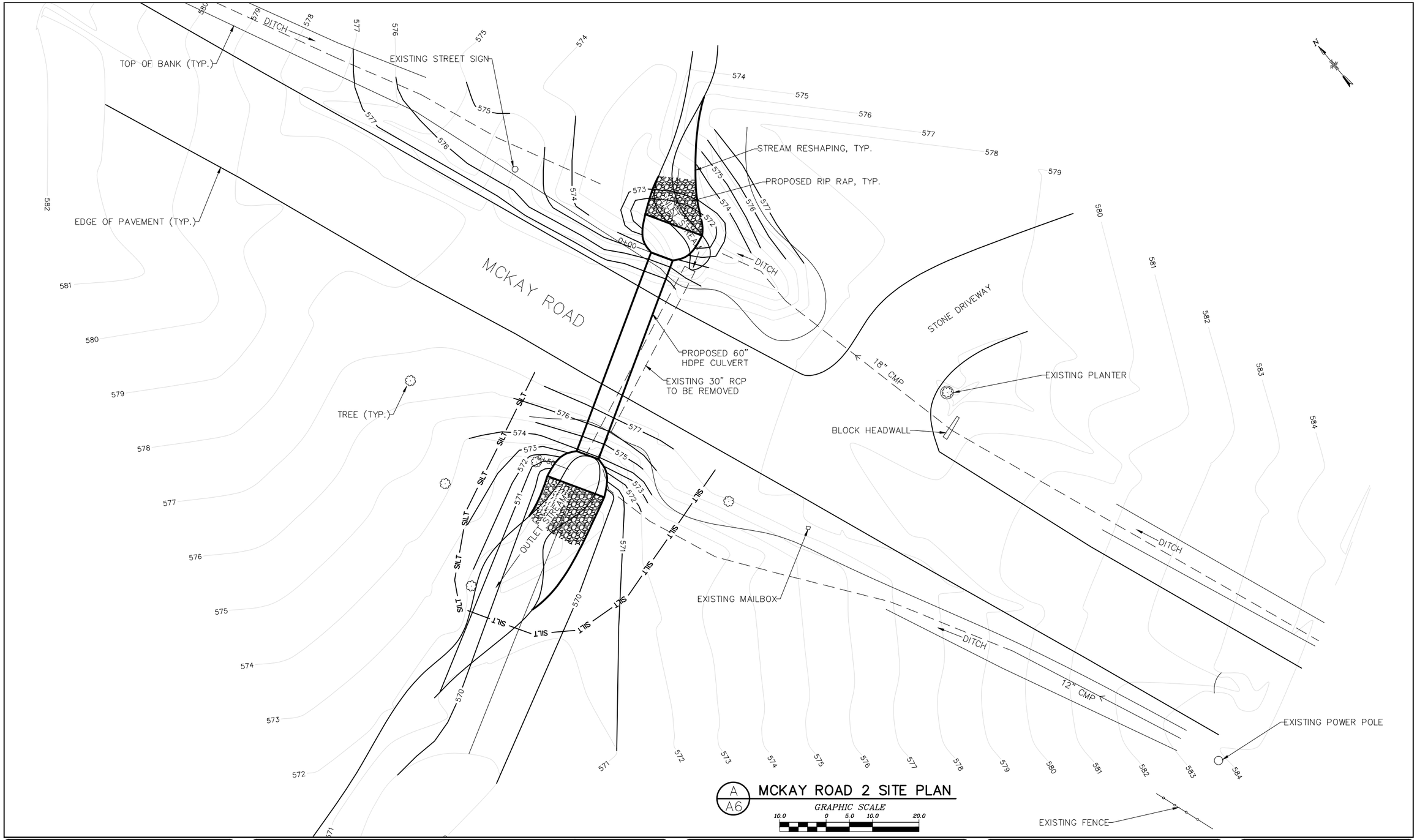

NO.	DATE	REVISION	BY
00	10/2016	ORIGINAL ISSUE	ATB
01	12/28/16	GOSR REVIEW ISSUE	BSN
02	2/24/17	ENVIRONMENTAL REVIEW ISSUE	BSN

JME
John M. McDonald Engineering, P.C.
a member of PRIME Group

New York Office
7 South Church Street Schenectady, New York 12305
Ph: 518 382 1774 Fax: 518 382 1776
www.mcdonaldengineers.com www.primeeng.com

PROJ. ENGR.: ATB | DRAWN BY: BSN | CHECKED BY: JMM

LICENSED PROFESSIONAL ENGINEER JOHN M. McDONALD NO. 54506 STATE OF NEW YORK

UNAUTHORIZED ALTERATIONS TO THIS DOCUMENT IS A VIOLATION OF SECTION 7209 SUBDIVISION 2 OF NEW YORK STATE EDUCATION LAW

MONTGOMERY COUNTY

CULVERT REPLACEMENT

CONTRACT NO. 3 - TOWN OF AMSTERDAM CULVERT REPLACEMENT
CONTRACT NO. 4 - TOWN OF FLORIDA CULVERT REPLACEMENT

SHEET TITLE:

MCKAY ROAD 2
SITE PLAN

SCALE: AS SHOWN

FILE NO.: 134-1601-150

DATE: OCTOBER 2016

SHEET NO.: A6

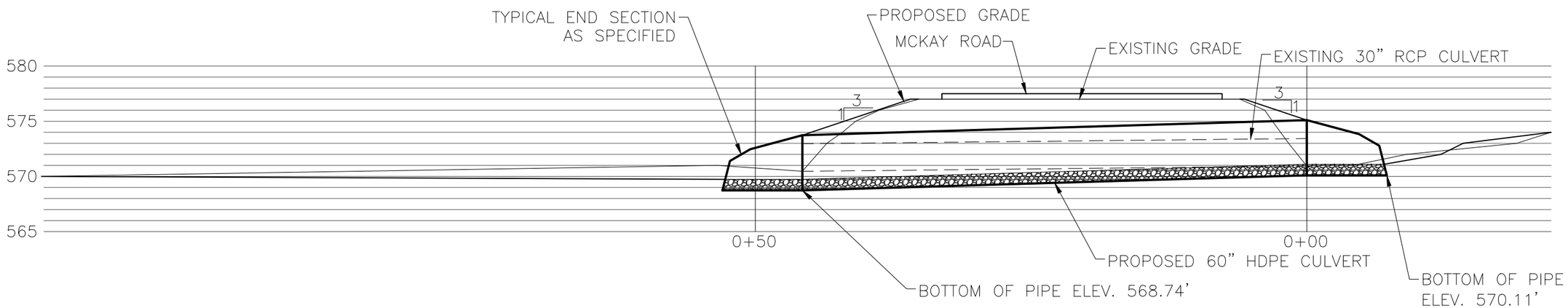

A
A7

MCKAY ROAD 2 PROFILE

GRAPHIC SCALE
5.0 0 2.5 5.0 10.0

NO.	DATE	REVISION	BY
00	10/2016	ORIGINAL ISSUE	ATB
01	12/28/16	GOSR REVIEW ISSUE	BSN
02	2/24/17	ENVIRONMENTAL REVIEW ISSUE	BSN

JME
John M. McDonald Engineering, P.C.
a member of PRIMEES Group®

New York Office
7 South Church Street Schenectady, New York 12305
Ph: 518 382 1774 Fax: 518 382 1776
www.mcdonaldengineers.com www.primeeng.com

PROJ. ENGR.: ATB | DRAWN BY: BSN | CHECKED BY: JMM

PROFESSIONAL ENGINEER
JOHN M. McDONALD
NO. 54506
STATE OF NEW YORK

UNAUTHORIZED ALTERATIONS TO THIS DOCUMENT IS A VIOLATION OF SECTION 7209 SUBDIVISION 2 OF NEW YORK STATE EDUCATION LAW

MONTGOMERY COUNTY

CULVERT REPLACEMENT

CONTRACT NO. 3 - TOWN OF AMSTERDAM CULVERT REPLACEMENT
CONTRACT NO. 4 - TOWN OF FLORIDA CULVERT REPLACEMENT

SHEET TITLE:

MCKAY ROAD 2 PROFILE

SCALE: AS SHOWN

FILE NO.: 134-1601-160

DATE: OCTOBER 2016

SHEET NO.: A7

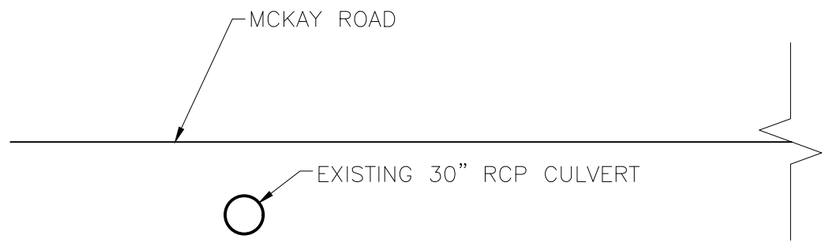

A / A8 EXISTING CROSS SECTION

DO NOT SCALE

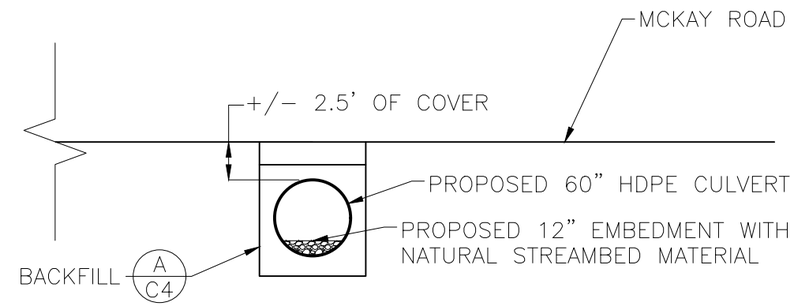

B / A8 PROPOSED CROSS SECTION

DO NOT SCALE

NO.	DATE	REVISION	BY
00	10/2016	ORIGINAL ISSUE	ATB
01	12/28/16	GOSR REVIEW ISSUE	BSN
02	2/24/17	ENVIRONMENTAL REVIEW ISSUE	BSN

JME
John M. McDonald Engineering, P.C.
a member of PRIMEER Group®

New York Office
7 South Church Street Schenectady, New York 12305
Ph: 518 382 1774 Fax: 518 382 1776
www.mcdonaldengineers.com www.primeeng.com

PROJ. ENGR.: ATB | DRAWN BY: BSN | CHECKED BY: JMM

PROFESSIONAL ENGINEER JOHN M. McDONALD NO. 54506 STATE OF NEW YORK

UNAUTHORIZED ALTERATIONS TO THIS DOCUMENT IS A VIOLATION OF SECTION 7209 SUBDIVISION 2 OF NEW YORK STATE EDUCATION LAW

MONTGOMERY COUNTY

CULVERT REPLACEMENT

CONTRACT NO. 3 - TOWN OF AMSTERDAM CULVERT REPLACEMENT
CONTRACT NO. 4 - TOWN OF FLORIDA CULVERT REPLACEMENT

SHEET TITLE:

MCKAY ROAD 2 CROSS SECTIONS

SCALE: AS SHOWN

FILE NO.: 134-1601-170

DATE: OCTOBER 2016

SHEET NO.: A8

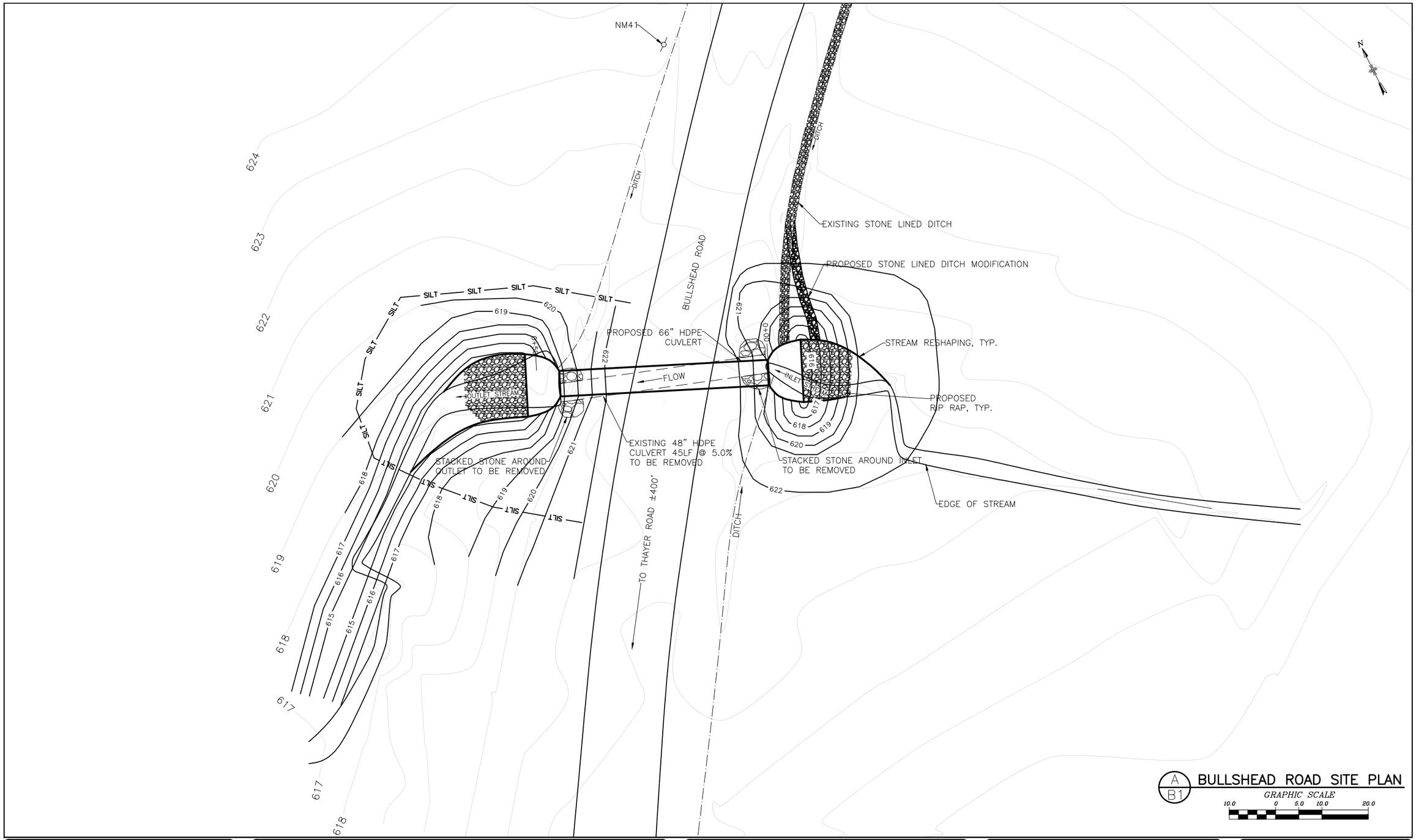

NO.	DATE	REVISION	BY
00	10/2016	ORIGINAL ISSUE	ATB
01	12/28/16	GOSR REVIEW ISSUE	BSN
02	2/24/17	ENVIRONMENTAL REVIEW ISSUE	BSN

JME
John M. McDonald Engineering
a member of PRIME Group®

New York Office
7 South Church Street Schenectady, New York 12305
Ph: 518 382 1774 Fax: 518 382 1776
www.mcdonaldengineers.com www.primeeng.com

PROJ. ENGR.: ATB | DRAWN BY: BSN | CHECKED BY: JMM

PROFESSIONAL ENGINEER JOHN M. McDONALD NO. 54506 STATE OF NEW YORK

UNAUTHORIZED ALTERATIONS TO THIS DOCUMENT IS A VIOLATION OF SECTION 7209 SUBDIVISION 2 OF NEW YORK STATE EDUCATION LAW

MONTGOMERY COUNTY

CULVERT REPLACEMENT

CONTRACT NO. 3 - TOWN OF AMSTERDAM CULVERT REPLACEMENT
CONTRACT NO. 4 - TOWN OF FLORIDA CULVERT REPLACEMENT

SHEET TITLE:

BULLSHEAD ROAD
SITE PLAN

SCALE: AS SHOWN

FILE NO.: 134-1601-200

DATE: OCTOBER 2016

SHEET NO.: B1

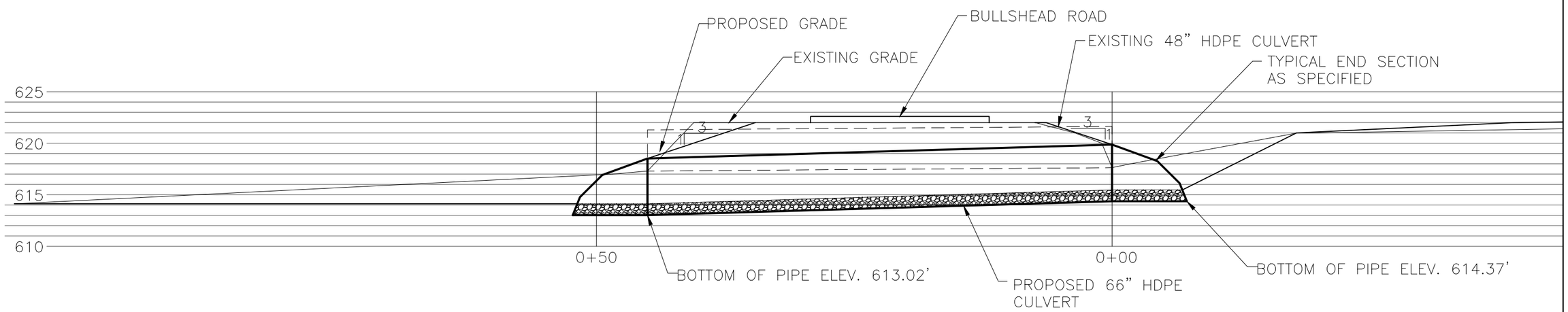

A
B2

BULLSHEAD ROAD PROFILE

GRAPHIC SCALE
5.0 0 2.5 5.0 10.0

NO.	DATE	REVISION	BY
00	10/2016	ORIGINAL ISSUE	ATB
01	12/28/16	GOSR REVIEW ISSUE	BSN
02	2/24/17	ENVIRONMENTAL REVIEW ISSUE	BSN

JME
John M. McDonald Engineering
a member of PRIME Group®

New York Office
7 South Church Street Schenectady, New York 12305
Ph: 518 382 1774 Fax: 518 382 1776
www.mcdonaldengineers.com www.primeeng.com

PROJ. ENGR.: ATB | DRAWN BY: BSN | CHECKED BY: JMM

LICENSED PROFESSIONAL ENGINEER
JOHN M. McDONALD
NO. 54506
STATE OF NEW YORK

UNAUTHORIZED ALTERATIONS TO THIS DOCUMENT IS A VIOLATION OF SECTION 7209 SUBDIVISION 2 OF NEW YORK STATE EDUCATION LAW

MONTGOMERY COUNTY

CULVERT REPLACEMENT

CONTRACT NO. 3 - TOWN OF AMSTERDAM CULVERT REPLACEMENT
CONTRACT NO. 4 - TOWN OF FLORIDA CULVERT REPLACEMENT

SHEET TITLE:
BULLSHEAD ROAD PROFILE

SCALE: AS SHOWN
FILE NO.: 134-1601-203
DATE: OCTOBER 2016
SHEET NO.: B2

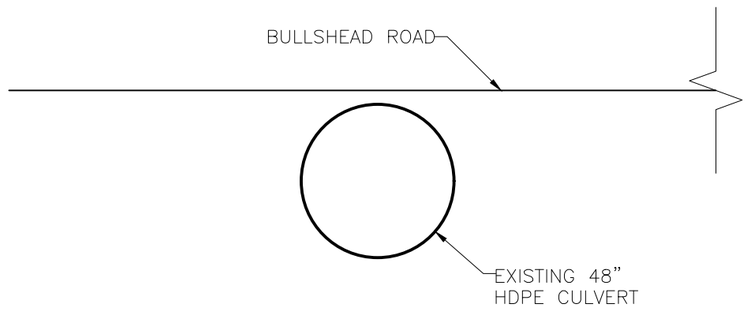

A / B3 EXISTING CROSS SECTION

DO NOT SCALE

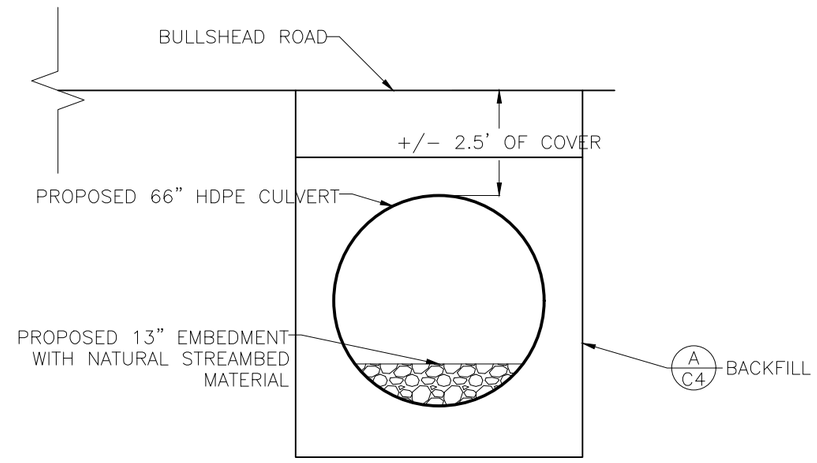

B / B3 PROPOSED CROSS SECTION

DO NOT SCALE

NO.	DATE	REVISION	BY
00	10/2016	ORIGINAL ISSUE	ATB
01	12/28/16	GOSR REVIEW ISSUE	BSN
02	2/24/17	ENVIRONMENTAL REVIEW ISSUE	BSN

JME
John M. McDonald Engineering
a member of PRIME Group®

New York Office
7 South Church Street Schenectady, New York 12305
Ph: 518 382 1774 Fax: 518 382 1776
www.mcdonaldengineers.com www.primeeng.com

PROJ. ENGR.: ATB | DRAWN BY: BSN | CHECKED BY: JMM

LICENSED PROFESSIONAL ENGINEER JOHN M. McDONALD NO. 54506 STATE OF NEW YORK

UNAUTHORIZED ALTERATIONS TO THIS DOCUMENT IS A VIOLATION OF SECTION 7209 SUBDIVISION 2 OF NEW YORK STATE EDUCATION LAW

MONTGOMERY COUNTY

CULVERT REPLACEMENT

CONTRACT NO. 3 - TOWN OF AMSTERDAM CULVERT REPLACEMENT
CONTRACT NO. 4 - TOWN OF FLORIDA CULVERT REPLACEMENT

SHEET TITLE:

BULLSHEAD ROAD
CROSS SECTIONS

SCALE: AS SHOWN

FILE NO.: 134-1601-206

DATE: OCTOBER 2016

SHEET NO.: B3

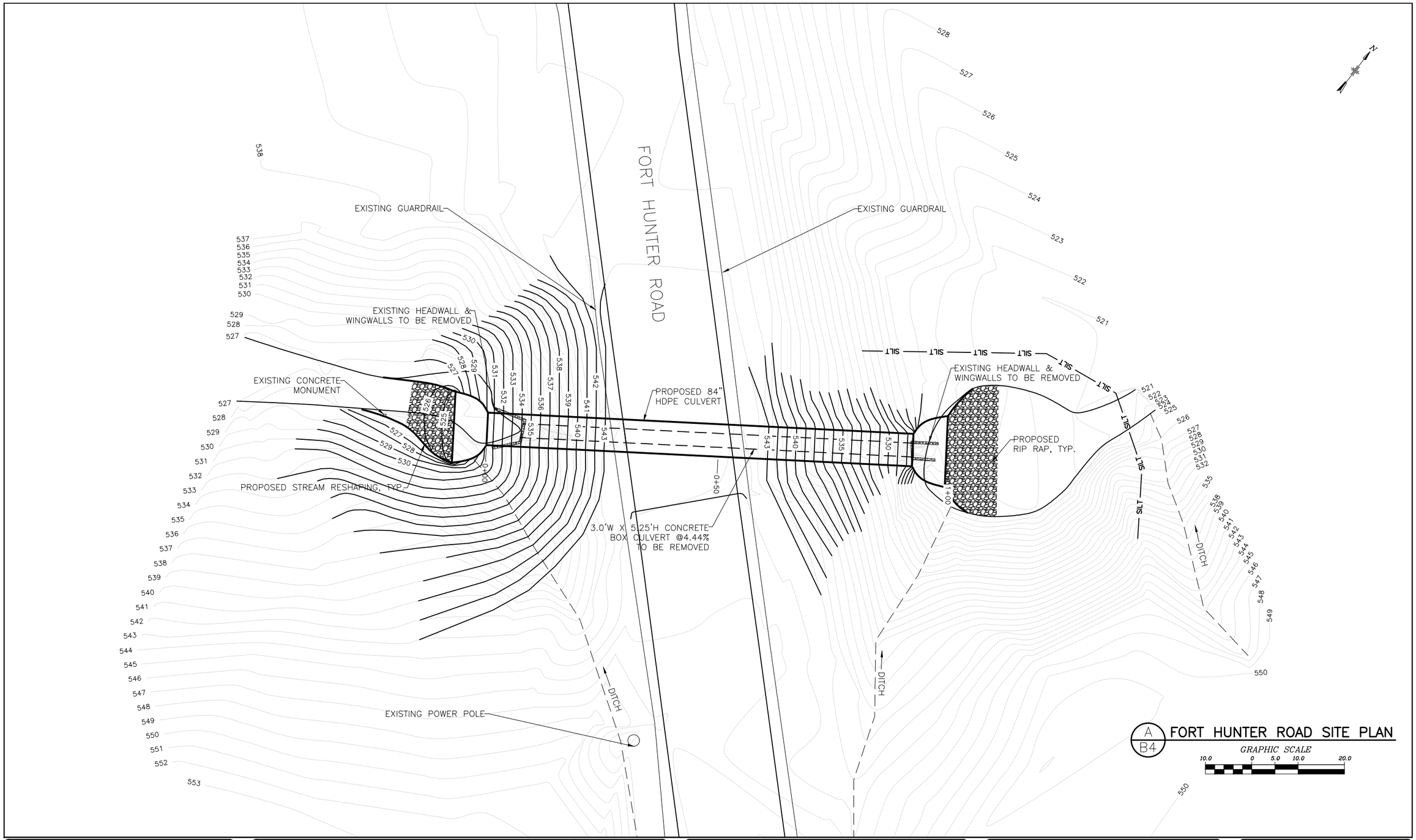

NO.	DATE	REVISION	BY
00	10/2016	ORIGINAL ISSUE	ATB
01	12/28/16	GOSR REVIEW ISSUE	BSN
02	2/24/17	ENVIRONMENTAL REVIEW ISSUE	BSN

JME
John M. McDonald Engineering
a member of PRIME Group®

New York Office
7 South Church Street Schenectady, New York 12305
Ph: 518 382 1774 Fax: 518 382 1776
www.mcdonaldengineers.com www.primeeng.com

PROJ. ENGR.: ATB | DRAWN BY: BSN | CHECKED BY: JMM

LICENSED PROFESSIONAL ENGINEER JOHN M. McDONALD NO. 54506 STATE OF NEW YORK

UNAUTHORIZED ALTERATIONS TO THIS DOCUMENT IS A VIOLATION OF SECTION 7209 SUBDIVISION 2 OF NEW YORK STATE EDUCATION LAW

MONTGOMERY COUNTY

CULVERT REPLACEMENT

CONTRACT NO. 3 - TOWN OF AMSTERDAM CULVERT REPLACEMENT
CONTRACT NO. 4 - TOWN OF FLORIDA CULVERT REPLACEMENT

SHEET TITLE:

FORT HUNTER ROAD
SITE PLAN

SCALE: AS SHOWN

FILE NO.: 134-1601-210

DATE: OCTOBER 2016

SHEET NO.: B4

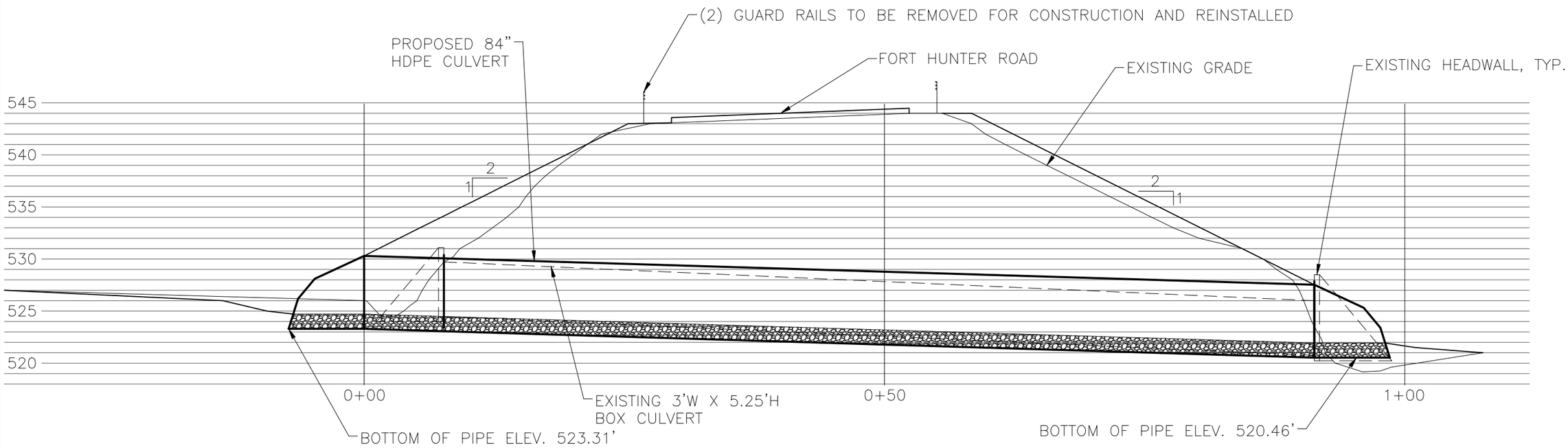

A
B5

FORT HUNTER ROAD PROFILE

GRAPHIC SCALE
5.0 0 2.5 5.0 10.0

NO.	DATE	REVISION	BY
00	10/2016	ORIGINAL ISSUE	ATB
01	12/28/16	GOSR REVIEW ISSUE	BSN
02	2/24/17	ENVIRONMENTAL REVIEW ISSUE	BSN

JME
John M. McDonald Engineering
a member of PRIME Group®
New York Office
7 South Church Street Schenectady, New York 12305
Ph: 518 382 1774 Fax: 518 382 1776
www.mcdonaldengineers.com www.primeeng.com

PROJ. ENGR.: ATB | DRAWN BY: BSN | CHECKED BY: JMM

LICENSED PROFESSIONAL ENGINEER JOHN M. McDONALD NO. 54506 STATE OF NEW YORK

UNAUTHORIZED ALTERATIONS TO THIS DOCUMENT IS A VIOLATION OF SECTION 7209 SUBDIVISION 2 OF NEW YORK STATE EDUCATION LAW

MONTGOMERY COUNTY

CULVERT REPLACEMENT

CONTRACT NO. 3 - TOWN OF AMSTERDAM CULVERT REPLACEMENT
CONTRACT NO. 4 - TOWN OF FLORIDA CULVERT REPLACEMENT

SHEET TITLE:
FORT HUNTER ROAD PROFILE

SCALE: AS SHOWN
FILE NO.: 134-1601-213
DATE: OCTOBER 2016
SHEET NO.: B5

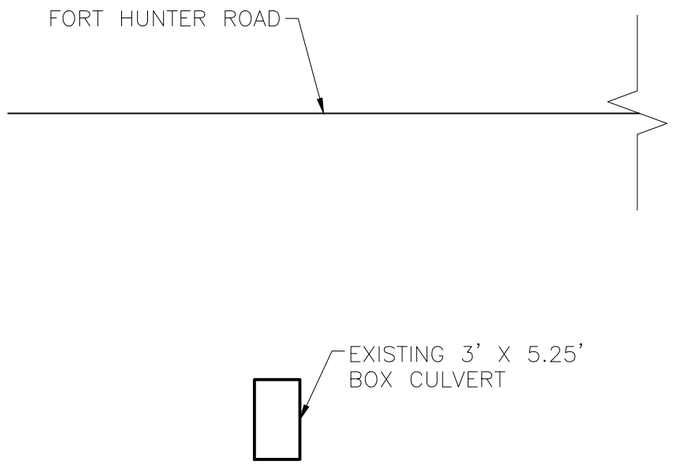

A / B6 EXISTING CROSS SECTION

DO NOT SCALE

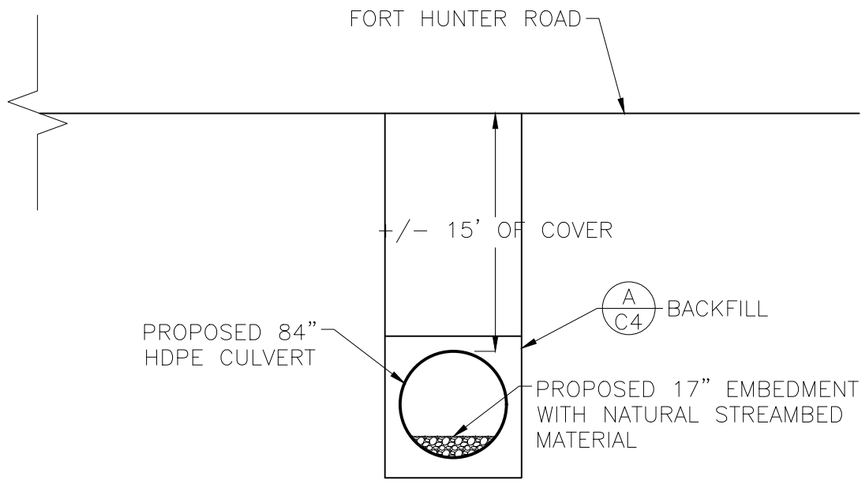

B / B6 PROPOSED CROSS SECTION

DO NOT SCALE

NO.	DATE	REVISION	BY
00	10/2016	ORIGINAL ISSUE	ATB
01	12/28/16	GOSR REVIEW ISSUE	BSN
02	2/24/17	ENVIRONMENTAL REVIEW ISSUE	BSN

JME
John M. McDonald Engineering
a member of PRIME Group®

New York Office
7 South Church Street Schenectady, New York 12305
Ph: 518 382 1774 Fax: 518 382 1776
www.mcdonaldengineers.com www.primeeng.com

PROJ. ENGR.: ATB | DRAWN BY: BSN | CHECKED BY: JMM

LICENSED PROFESSIONAL ENGINEER JOHN M. McDONALD NO. 54506 STATE OF NEW YORK

UNAUTHORIZED ALTERATIONS TO THIS DOCUMENT IS A VIOLATION OF SECTION 7209 SUBDIVISION 2 OF NEW YORK STATE EDUCATION LAW

MONTGOMERY COUNTY

CULVERT REPLACEMENT

CONTRACT NO. 3 - TOWN OF AMSTERDAM CULVERT REPLACEMENT
CONTRACT NO. 4 - TOWN OF FLORIDA CULVERT REPLACEMENT

SHEET TITLE:

FORT HUNTER ROAD
CROSS SECTIONS

SCALE: AS SHOWN

FILE NO.: 134-1601-216

DATE: OCTOBER 2016

SHEET NO.: B6

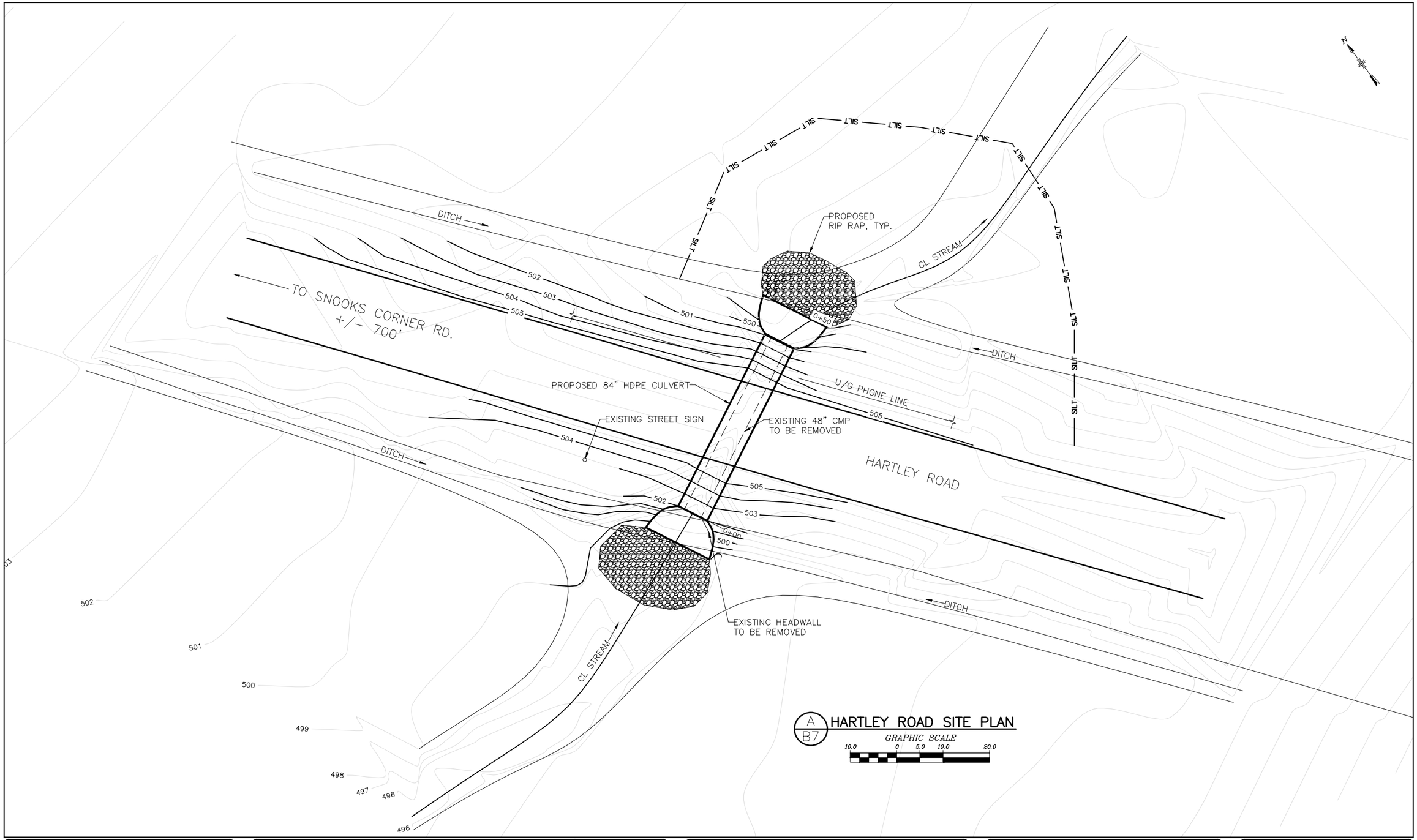

NO.	DATE	REVISION	BY
00	10/2016	ORIGINAL ISSUE	ATB
01	12/28/16	GOSR REVIEW ISSUE	BSN
02	2/24/17	ENVIRONMENTAL REVIEW ISSUE	BSN

JME
John M. McDonald Engineering, P.C.
a member of PRIME Group

New York Office
7 South Church Street Schenectady, New York 12305
Ph: 518 382 1774 Fax: 518 382 1776
www.mcdonaldengineers.com www.primeeng.com

PROJ. ENGR.: ATB | DRAWN BY: BSN | CHECKED BY: JMM

LICENSED PROFESSIONAL ENGINEER
JOHN M. McDONALD
NO. 54506
STATE OF NEW YORK

UNAUTHORIZED ALTERATIONS TO THIS DOCUMENT IS A VIOLATION OF SECTION 7209 SUBDIVISION 2 OF NEW YORK STATE EDUCATION LAW

MONTGOMERY COUNTY

CULVERT REPLACEMENT

CONTRACT NO. 3 - TOWN OF AMSTERDAM CULVERT REPLACEMENT
CONTRACT NO. 4 - TOWN OF FLORIDA CULVERT REPLACEMENT

SHEET TITLE:

HARTLEY ROAD
SITE PLAN

SCALE: AS SHOWN

FILE NO.: 134-1601-220

DATE: OCTOBER 2016

SHEET NO.: B7

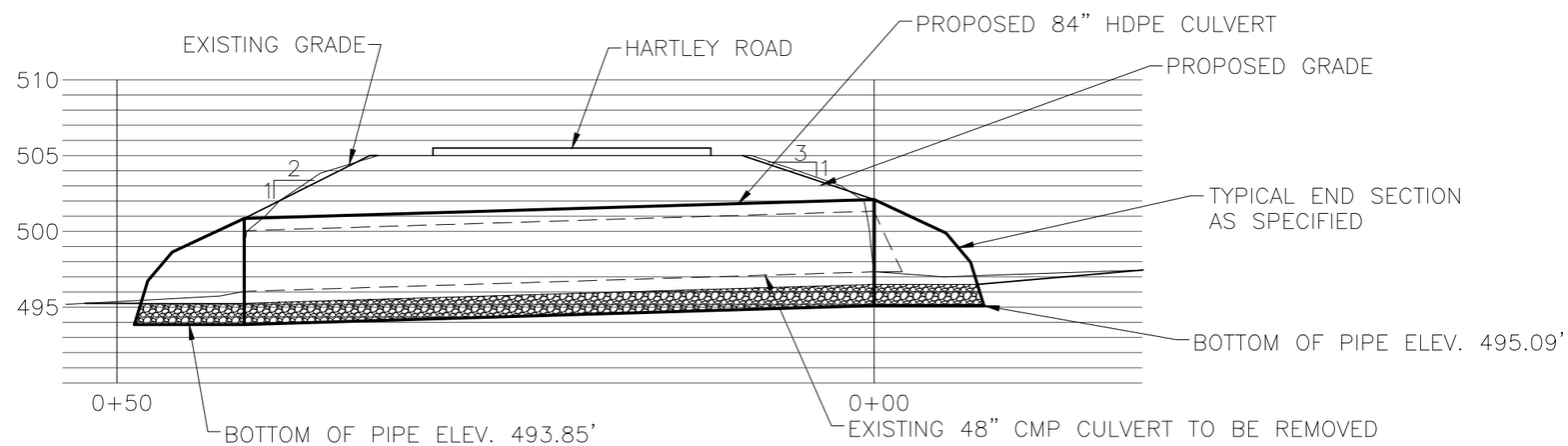

A
B8

HARTLEY ROAD PROFILE

GRAPHIC SCALE
5.0 0 2.5 5.0 10.0

NO.	DATE	REVISION	BY
00	10/2016	ORIGINAL ISSUE	ATB
01	12/28/16	GOSR REVIEW ISSUE	BSN
02	2/24/17	ENVIRONMENTAL REVIEW ISSUE	BSN

JME
John M. McDonald Engineering, P.C.
a member of PRIMEES Group®

New York Office
7 South Church Street Schenectady, New York 12305
Ph: 518 382 1774 Fax: 518 382 1776
www.mcdonaldengineers.com www.primeeng.com

PROJ. ENGR.: ATB | DRAWN BY: BSN | CHECKED BY: JMM

LICENSED PROFESSIONAL ENGINEER JOHN M. McDONALD NO. 54506 STATE OF NEW YORK

UNAUTHORIZED ALTERATIONS TO THIS DOCUMENT IS A VIOLATION OF SECTION 7209 SUBDIVISION 2 OF NEW YORK STATE EDUCATION LAW

MONTGOMERY COUNTY

CULVERT REPLACEMENT

CONTRACT NO. 3 - TOWN OF AMSTERDAM CULVERT REPLACEMENT
CONTRACT NO. 4 - TOWN OF FLORIDA CULVERT REPLACEMENT

SHEET TITLE:
HARTLEY ROAD PROFILE

SCALE: AS SHOWN
FILE NO.: 134-1601-223
DATE: OCTOBER 2016
SHEET NO.: B8

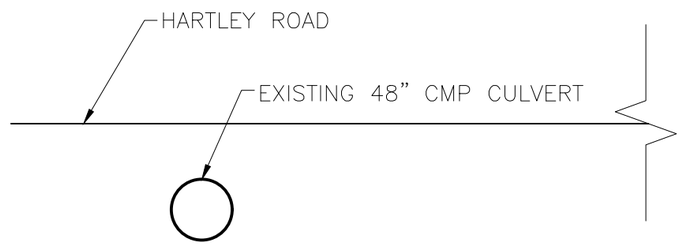

A / B9 EXISTING CROSS SECTION

DO NOT SCALE

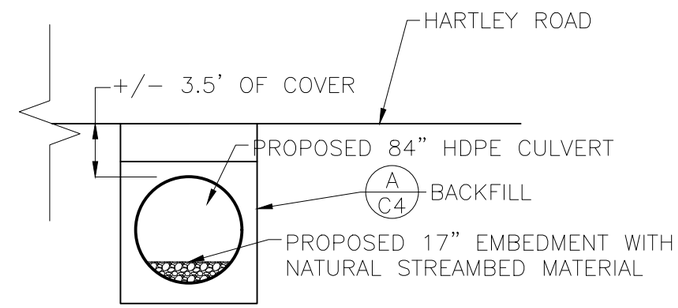

B / B9 PROPOSED CROSS SECTION

DO NOT SCALE

NO.	DATE	REVISION	BY
00	10/2016	ORIGINAL ISSUE	ATB
01	12/28/16	GOSR REVIEW ISSUE	BSN
02	2/24/17	ENVIRONMENTAL REVIEW ISSUE	BSN

JME
John M. McDonald Engineering, P.C.
a member of PRIME Group

New York Office
7 South Church Street Schenectady, New York 12305
Ph: 518 382 1774 Fax: 518 382 1776
www.mcdonaldengineers.com www.primeeng.com

PROJ. ENGR.: ATB | DRAWN BY: BSN | CHECKED BY: JMM

PROFESSIONAL ENGINEER JOHN M. McDONALD NO. 54506 STATE OF NEW YORK

UNAUTHORIZED ALTERATIONS TO THIS DOCUMENT IS A VIOLATION OF SECTION 7209 SUBDIVISION 2 OF NEW YORK STATE EDUCATION LAW

MONTGOMERY COUNTY

CULVERT REPLACEMENT

CONTRACT NO. 3 - TOWN OF AMSTERDAM CULVERT REPLACEMENT
CONTRACT NO. 4 - TOWN OF FLORIDA CULVERT REPLACEMENT

SHEET TITLE:

HARTLEY ROAD CROSS SECTIONS

SCALE: AS SHOWN

FILE NO.: 134-1601-226

DATE: OCTOBER 2016

SHEET NO.: B9

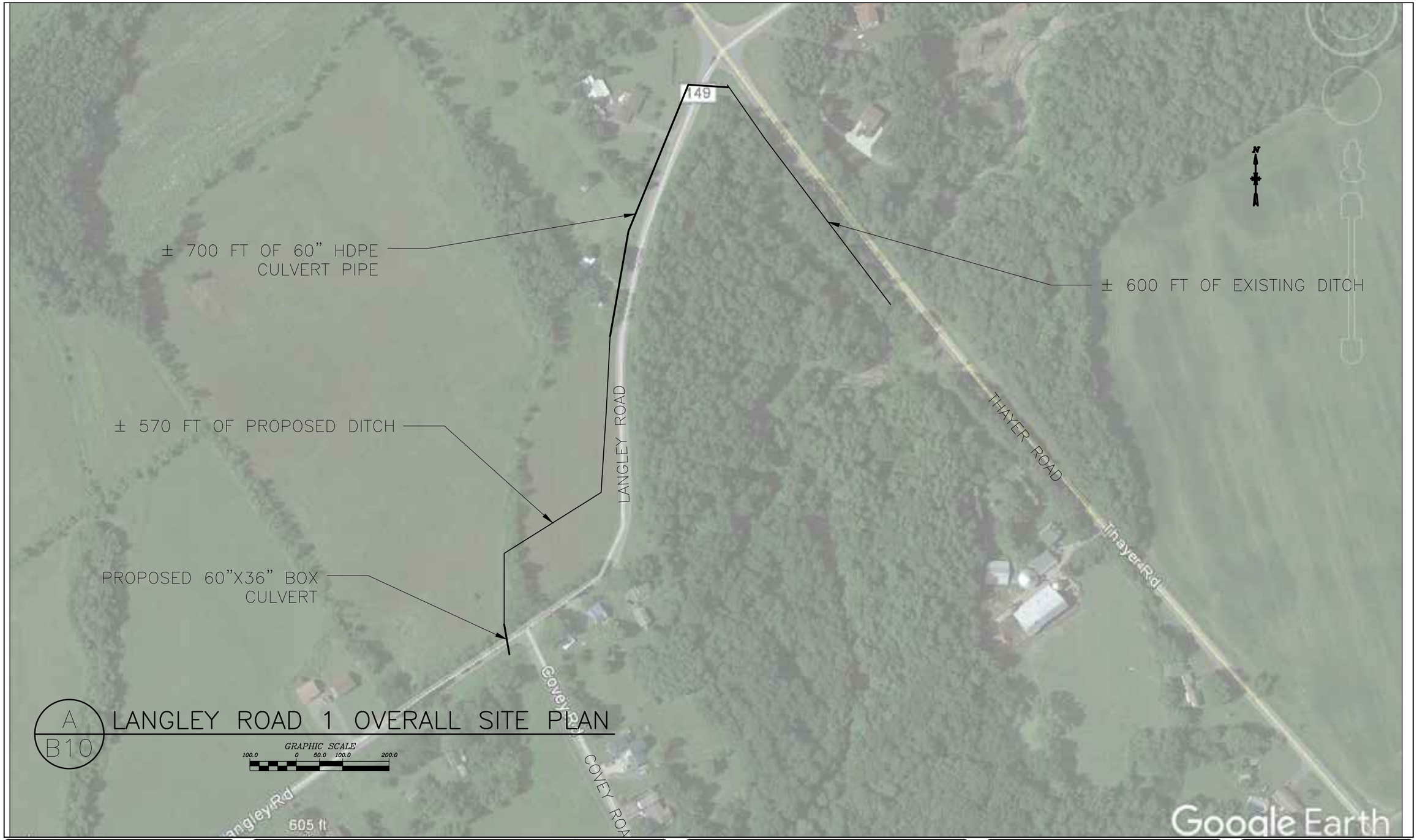

A
B10

LANGLEY ROAD 1 OVERALL SITE PLAN

GRAPHIC SCALE
100.0 0 50.0 100.0 200.0

NO.	DATE	REVISION	BY
00	10/2016	ORIGINAL ISSUE	BSN
01	12/28/16	GOSR REVIEW ISSUE	BSN
02	2/24/17	ENVIRONMENTAL REVIEW ISSUE	BSN

JME
John M. McDonald Engineering, P.C.
a member of PRIME Group®

New York Office
7 South Church Street Schenectady, New York 12305
Ph: 518 382 1774 Fax: 518 382 1776
www.mcdonaldengineers.com www.primeeng.com

PROJ. ENGR.: ATB | DRAWN BY: BSN | CHECKED BY: JMM

PROFESSIONAL ENGINEER JOHN M. McDONALD NO. 54508 STATE OF NEW YORK
UNAUTHORIZED ALTERATIONS TO THIS DOCUMENT IS A VIOLATION OF SECTION 7209 SUBDIVISION 2 OF NEW YORK STATE EDUCATION LAW

MONTGOMERY COUNTY

CULVERT REPLACEMENT

CONTRACT NO. 3 - TOWN OF AMSTERDAM CULVERT REPLACEMENT
CONTRACT NO. 4 - TOWN OF FLORIDA CULVERT REPLACEMENT

SHEET TITLE:
LANGLEY ROAD OVERALL SITE PLAN

SCALE: AS SHOWN
FILE NO.: 134-1601-230
DATE: OCTOBER 2016
SHEET NO.: B10

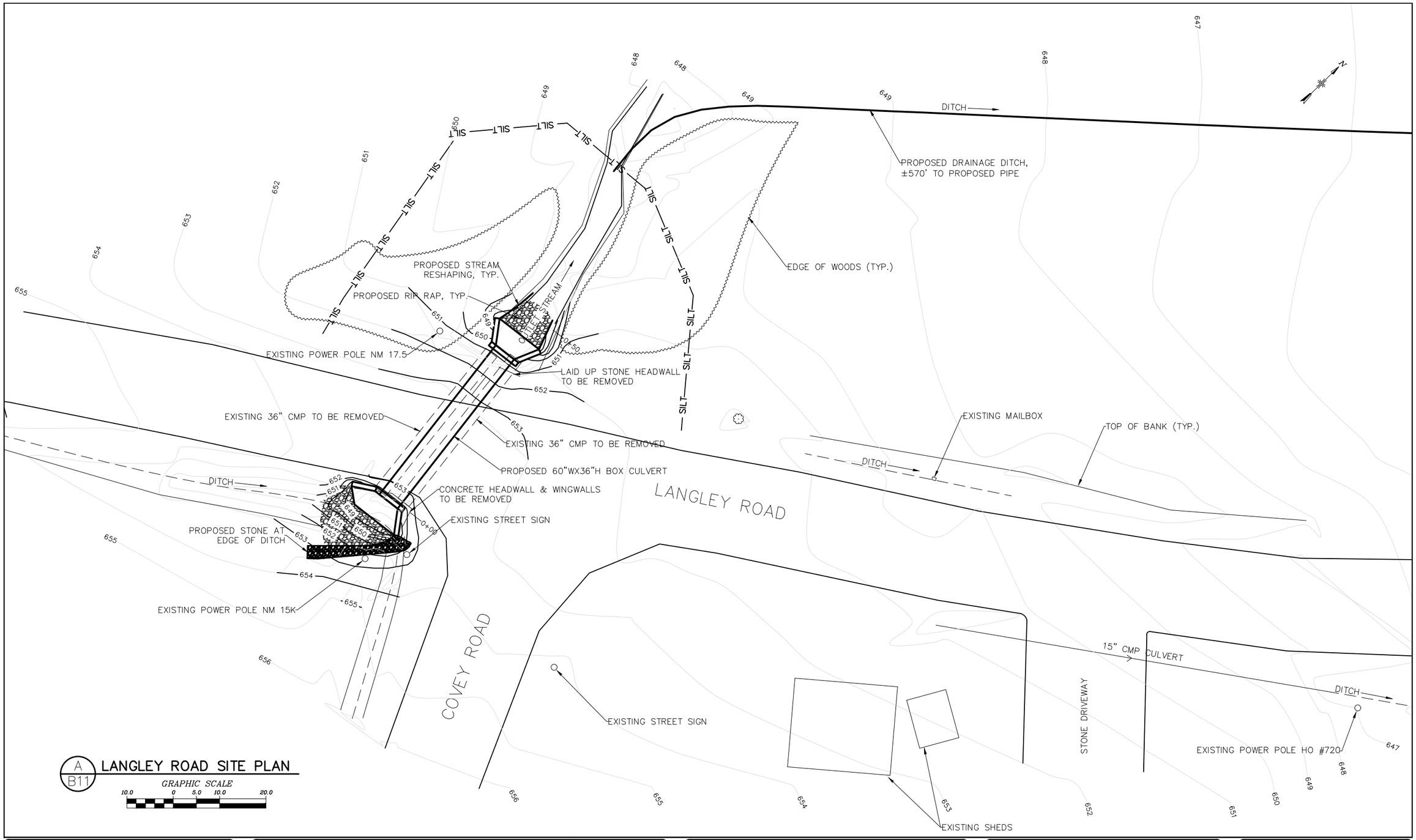

A
B11

LANGLEY ROAD SITE PLAN

NO.	DATE	REVISION	BY
00	10/2016	ORIGINAL ISSUE	ATB
01	12/28/16	GOSR REVIEW ISSUE	BSN
02	2/24/17	ENVIRONMENTAL REVIEW ISSUE	BSN

JME
John M. McDonald Engineering, P.C.
a member of PRIMEES Group®

New York Office
7 South Church Street Schenectady, New York 12305
Ph: 518 382 1774 Fax: 518 382 1776
www.mcdonaldengineers.com www.primeeng.com

PROJ. ENGR.: ATB | DRAWN BY: BSN | CHECKED BY: JMM

LICENSED PROFESSIONAL ENGINEER JOHN M. McDONALD NO. 54506 STATE OF NEW YORK

UNAUTHORIZED ALTERATIONS TO THIS DOCUMENT IS A VIOLATION OF SECTION 7209 SUBDIVISION 2 OF NEW YORK STATE EDUCATION LAW

MONTGOMERY COUNTY

CULVERT REPLACEMENT

CONTRACT NO. 3 - TOWN OF AMSTERDAM CULVERT REPLACEMENT
CONTRACT NO. 4 - TOWN OF FLORIDA CULVERT REPLACEMENT

SHEET TITLE:

LANGLEY ROAD
SITE PLAN

SCALE: AS SHOWN

FILE NO.: 134-1601-233

DATE: OCTOBER 2016

SHEET NO.: B11

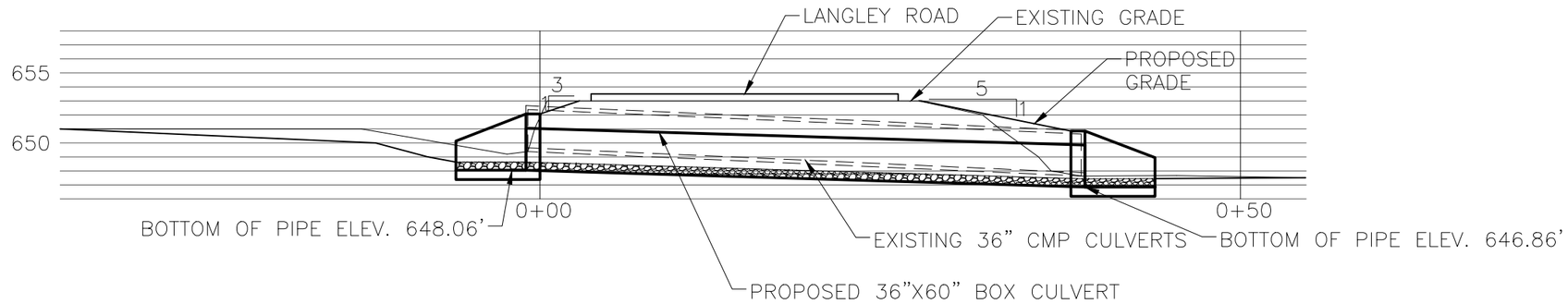

A / B12 LANGLEY ROAD PROFILE

GRAPHIC SCALE 5.0 0 2.5 5.0 10.0

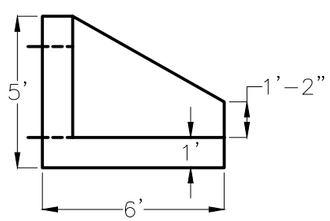

B / B12 HEADWALL ELEVATION

DO NOT SCALE

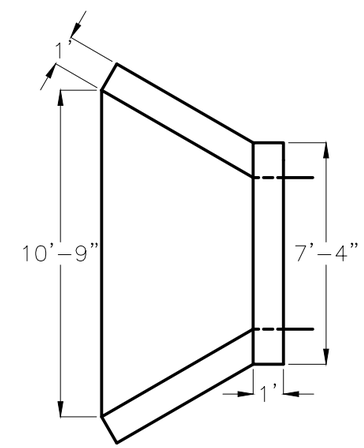

C / B12 OUTLET HEADWALL PLAN

DO NOT SCALE

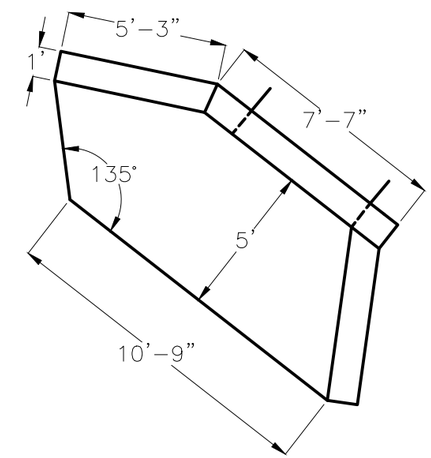

D / B12 INLET HEADWALL PLAN

DO NOT SCALE

NO.	DATE	REVISION	BY
00	10/2016	ORIGINAL ISSUE	ATB
01	12/28/16	GOSR REVIEW ISSUE	BSN
02	2/24/17	ENVIRONMENTAL REVIEW ISSUE	BSN

JME
John M. McDonald Engineering, P.C.
a member of PRIME Group

New York Office
7 South Church Street Schenectady, New York 12305
Ph: 518 382 1774 Fax: 518 382 1776
www.mcdonaldengineers.com www.primeeng.com

PROJ. ENGR.: ATB | DRAWN BY: BSN | CHECKED BY: JMM

LICENSED PROFESSIONAL ENGINEER JOHN M. McDONALD NO. 54506 STATE OF NEW YORK

UNAUTHORIZED ALTERATIONS TO THIS DOCUMENT IS A VIOLATION OF SECTION 7209 SUBDIVISION 2 OF NEW YORK STATE EDUCATION LAW

MONTGOMERY COUNTY

CULVERT REPLACEMENT

CONTRACT NO. 3 - TOWN OF AMSTERDAM CULVERT REPLACEMENT
CONTRACT NO. 4 - TOWN OF FLORIDA CULVERT REPLACEMENT

SHEET TITLE:

LANGLEY ROAD PROFILE

SCALE: AS SHOWN

FILE NO.: 134-1601-236

DATE: OCTOBER 2016

SHEET NO.: B12

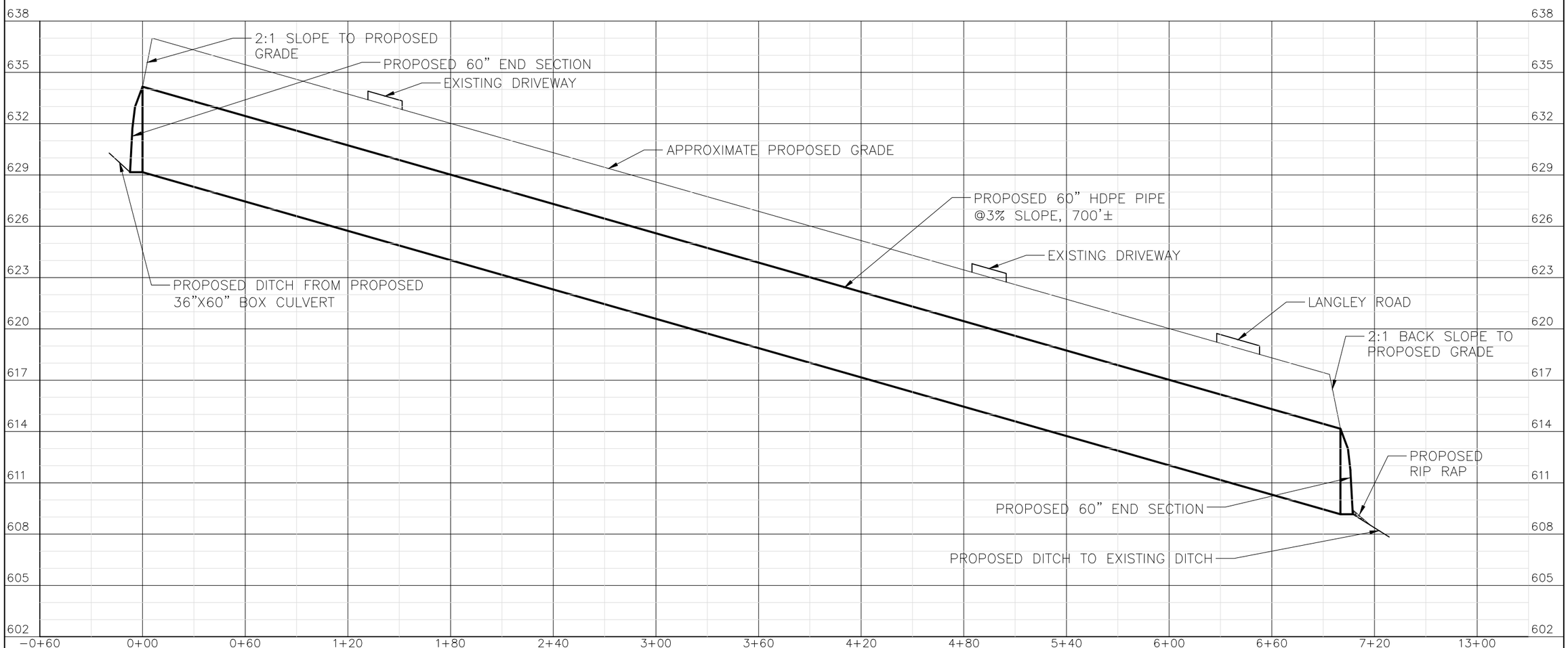

GRAPHIC SCALE

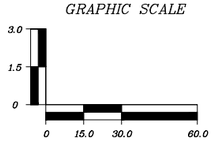

A
B13

LANGLEY ROAD EXTENDED PROFILE

NO.	DATE	REVISION	BY
00	10/2016	ORIGINAL ISSUE	BSN
01	12/28/16	GOSR REVIEW ISSUE	BSN
02	2/24/17	ENVIRONMENTAL REVIEW ISSUE	BSN

JME
John M. McDonald Engineering, P.C.
a member of PRIME Group

New York Office
7 South Church Street Schenectady, New York 12305
Ph: 518 382 1774 Fax: 518 382 1776
www.mcdonaldengineers.com www.primeeng.com

PROJ. ENGR.: ATB | DRAWN BY: BSN | CHECKED BY: JMM

LICENSED PROFESSIONAL ENGINEER JOHN M. McDONALD NO. 54506 STATE OF NEW YORK

UNAUTHORIZED ALTERATIONS TO THIS DOCUMENT IS A VIOLATION OF SECTION 7209 SUBDIVISION 2 OF NEW YORK STATE EDUCATION LAW

MONTGOMERY COUNTY

CULVERT REPLACEMENT

CONTRACT NO. 3 - TOWN OF AMSTERDAM CULVERT REPLACEMENT
CONTRACT NO. 4 - TOWN OF FLORIDA CULVERT REPLACEMENT

SHEET TITLE:

LANGLEY ROAD EXTENDED PROFILE

SCALE: AS SHOWN

FILE NO.: 134-1601-237

DATE: OCTOBER 2016

SHEET NO.: B13

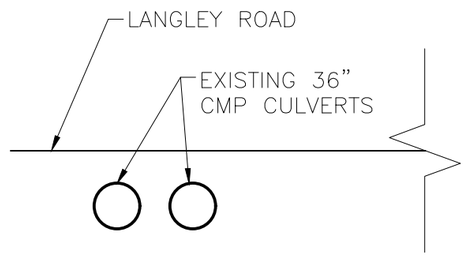

A / B14 EXISTING CROSS SECTION

DO NOT SCALE

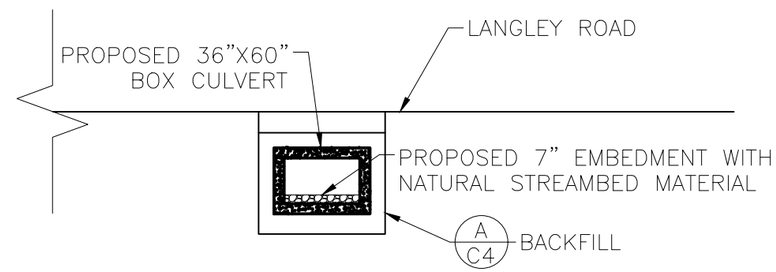

B / B14 PROPOSED CROSS SECTION

DO NOT SCALE

NO.	DATE	REVISION	BY
00	10/2016	ORIGINAL ISSUE	ATB
01	12/28/16	GOSR REVIEW ISSUE	BSN
02	2/24/17	ENVIRONMENTAL REVIEW ISSUE	BSN

JME
John M. McDonald Engineering, P.C.
a member of PRIME Group

New York Office
7 South Church Street Schenectady, New York 12305
Ph: 518 382 1774 Fax: 518 382 1776
www.mcdonaldengineers.com www.primeeng.com

PROJ. ENGR.: ATB | DRAWN BY: BSN | CHECKED BY: JMM

LICENSED PROFESSIONAL ENGINEER JOHN M. McDONALD NO. 54506 STATE OF NEW YORK

UNAUTHORIZED ALTERATIONS TO THIS DOCUMENT IS A VIOLATION OF SECTION 7209 SUBDIVISION 2 OF NEW YORK STATE EDUCATION LAW

MONTGOMERY COUNTY

CULVERT REPLACEMENT

CONTRACT NO. 3 - TOWN OF AMSTERDAM CULVERT REPLACEMENT
CONTRACT NO. 4 - TOWN OF FLORIDA CULVERT REPLACEMENT

SHEET TITLE:

LANGLEY ROAD CROSS SECTIONS

SCALE: AS SHOWN

FILE NO.: 134-1601-239

DATE: OCTOBER 2016

SHEET NO.: B14

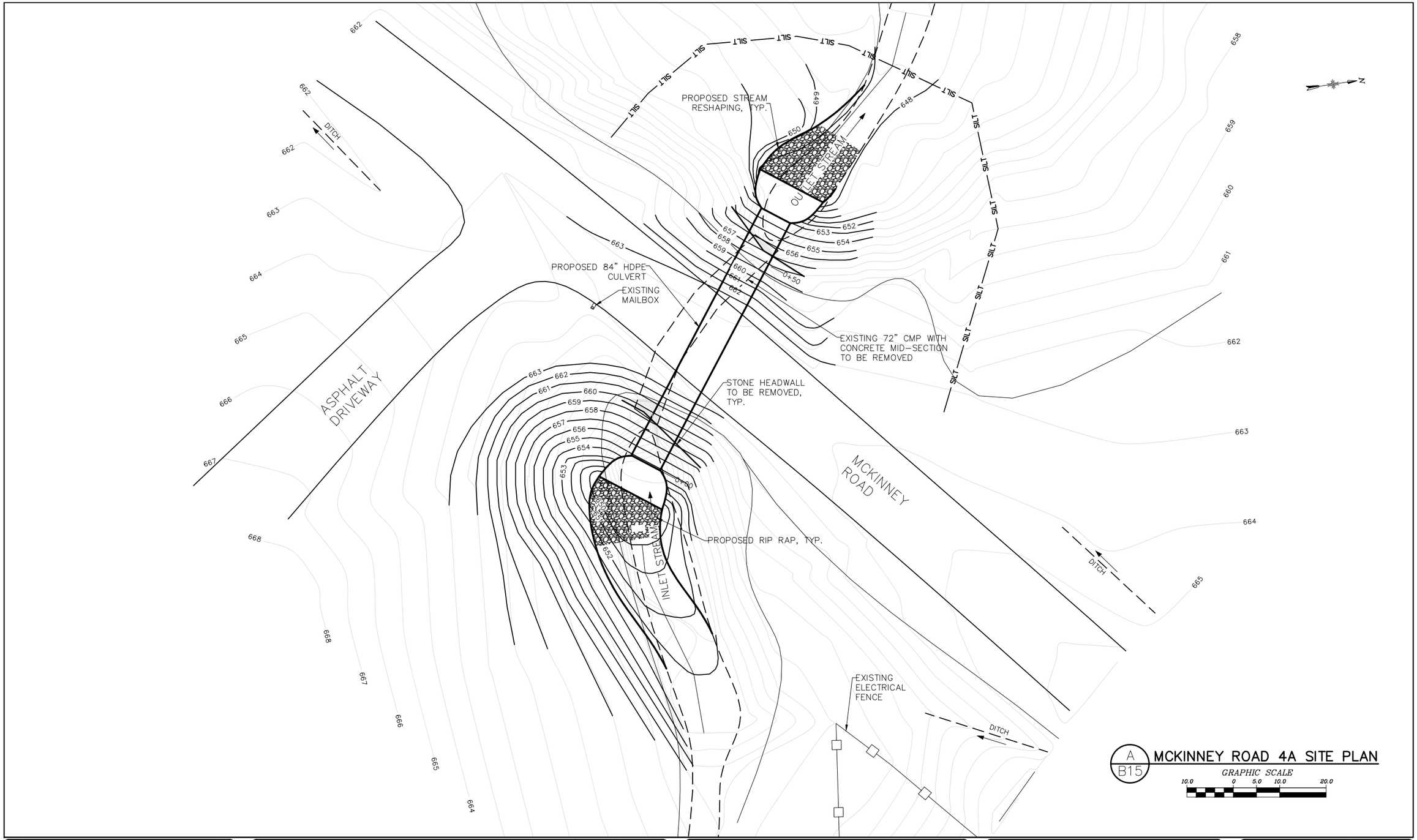

NO.	DATE	REVISION	BY
00	10/2016	ORIGINAL ISSUE	ATB
01	12/28/16	GOSR REVIEW ISSUE	BSN
02	2/24/17	ENVIRONMENTAL REVIEW ISSUE	BSN

JME
John M. McDonald Engineering
a member of PRIME Group

New York Office
7 South Church Street Schenectady, New York 12305
Ph: 518 382 1774 Fax: 518 382 1776
www.mcdonaldengineers.com www.primeeng.com

PROJ. ENGR.: ATB | DRAWN BY: BSN | CHECKED BY: JMM

LICENSED PROFESSIONAL ENGINEER
JOHN M. McDONALD
NO. 54506
STATE OF NEW YORK

UNAUTHORIZED ALTERATIONS TO THIS DOCUMENT IS A VIOLATION OF SECTION 7209 SUBDIVISION 2 OF NEW YORK STATE EDUCATION LAW

MONTGOMERY COUNTY

CULVERT REPLACEMENT

CONTRACT NO. 3 - TOWN OF AMSTERDAM CULVERT REPLACEMENT
CONTRACT NO. 4 - TOWN OF FLORIDA CULVERT REPLACEMENT

SHEET TITLE:

MCKINNEY ROAD 4A
SITE PLAN

SCALE: AS SHOWN

FILE NO.: 134-1601-240

DATE: OCTOBER 2016

SHEET NO.: B15

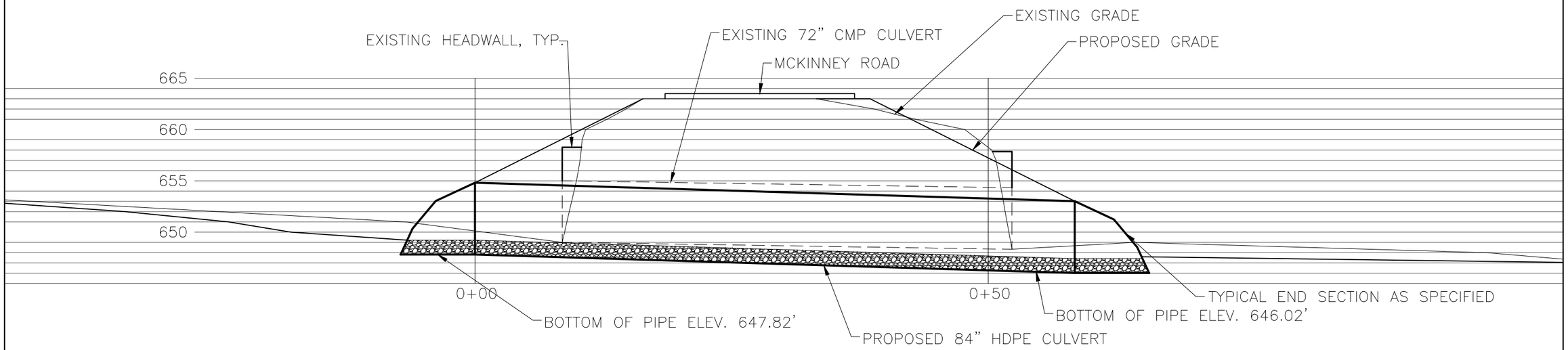

A
B16

MCKINNEY ROAD 4A PROFILE

GRAPHIC SCALE
5.0 0 2.5 5.0 10.0

NO.	DATE	REVISION	BY
00	10/2016	ORIGINAL ISSUE	ATB
01	12/28/16	GOSR REVIEW ISSUE	BSN
02	2/24/17	ENVIRONMENTAL REVIEW ISSUE	BSN

JME
John M. McDonald Engineering
a member of PRIME Group

New York Office
7 South Church Street Schenectady, New York 12305
Ph: 518 382 1774 Fax: 518 382 1776
www.mcdonaldengineers.com www.primeeng.com

PROJ. ENGR.: ATB | DRAWN BY: BSN | CHECKED BY: JMM

LICENSED PROFESSIONAL ENGINEER JOHN M. McDONALD NO. 54506 STATE OF NEW YORK

UNAUTHORIZED ALTERATIONS TO THIS DOCUMENT IS A VIOLATION OF SECTION 7209 SUBDIVISION 2 OF NEW YORK STATE EDUCATION LAW

MONTGOMERY COUNTY

CULVERT REPLACEMENT

CONTRACT NO. 3 - TOWN OF AMSTERDAM CULVERT REPLACEMENT
CONTRACT NO. 4 - TOWN OF FLORIDA CULVERT REPLACEMENT

SHEET TITLE:

MCKINNEY ROAD 4A
PROFILE

SCALE: AS SHOWN
FILE NO.: 134-1601-243
DATE: OCTOBER 2016
SHEET NO.: B16

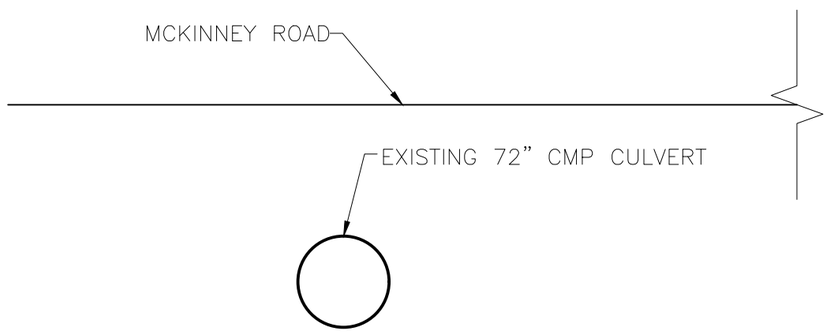

A / B17 EXISTING CROSS SECTION

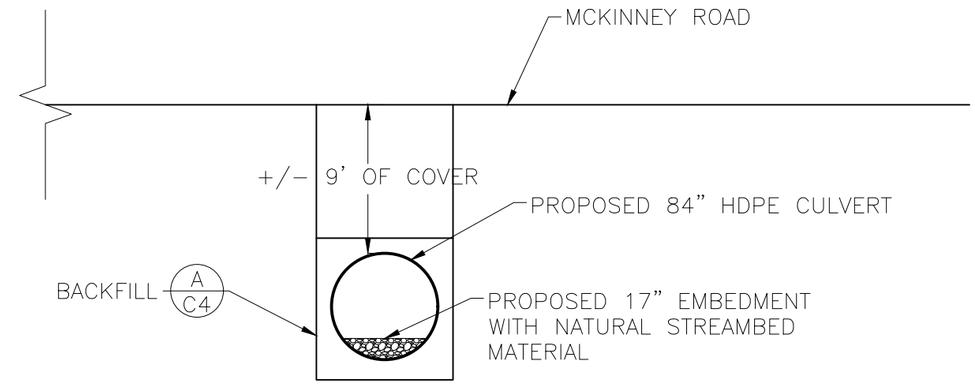

B / B17 PROPOSED CROSS SECTION

NO.	DATE	REVISION	BY
00	10/2016	ORIGINAL ISSUE	ATB
01	12/28/16	GOSR REVIEW ISSUE	BSN
02	2/24/17	ENVIRONMENTAL REVIEW ISSUE	BSN

JME
John M. McDonald Engineering
a member of PRIME Group

New York Office
7 South Church Street Schenectady, New York 12305
Ph: 518 382 1774 Fax: 518 382 1776
www.mcdonaldengineers.com www.primeeng.com

PROJ. ENGR.: ATB | DRAWN BY: BSN | CHECKED BY: JMM

LICENSED PROFESSIONAL ENGINEER JOHN M. McDONALD NO. 54506 STATE OF NEW YORK

UNAUTHORIZED ALTERATIONS TO THIS DOCUMENT IS A VIOLATION OF SECTION 7209 SUBDIVISION 2 OF NEW YORK STATE EDUCATION LAW

MONTGOMERY COUNTY

CULVERT REPLACEMENT

CONTRACT NO. 3 - TOWN OF AMSTERDAM CULVERT REPLACEMENT
CONTRACT NO. 4 - TOWN OF FLORIDA CULVERT REPLACEMENT

SHEET TITLE:

MCKINNEY ROAD 4A
CROSS SECTIONS

SCALE: AS SHOWN

FILE NO.: 134-1601-246

DATE: OCTOBER 2016

SHEET NO.: B17

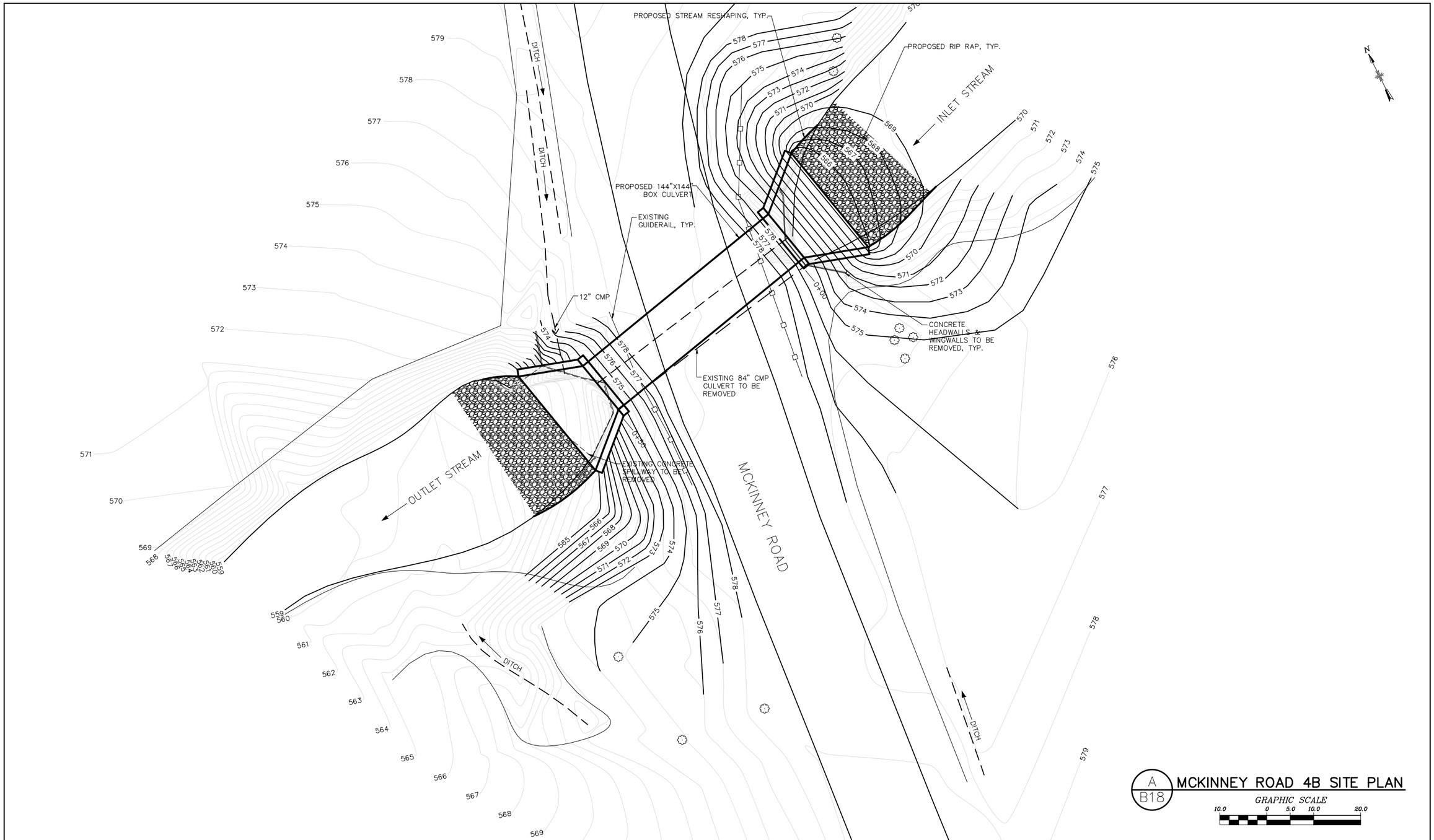

A
B18

MCKINNEY ROAD 4B SITE PLAN

GRAPHIC SCALE
10.0 0 5.0 10.0 20.0

NO.	DATE	REVISION	BY
00	10/2016	ORIGINAL ISSUE	ATB
01	12/28/16	GOSR REVIEW ISSUE	BSN
02	2/24/17	ENVIRONMENTAL REVIEW ISSUE	BSN

JME
John M. McDonald Engineering
a member of PRIME Group

New York Office
7 South Church Street Schenectady, New York 12305
Ph: 518 382 1774 Fax: 518 382 1776
www.mcdonaldengineers.com www.primeeng.com

PROJ. ENGR.: ATB | DRAWN BY: BSN | CHECKED BY: JMM

PROFESSIONAL ENGINEER JOHN M. McDONALD NO. 54508 STATE OF NEW YORK

UNAUTHORIZED ALTERATIONS TO THIS DOCUMENT IS A VIOLATION OF SECTION 7209 SUBDIVISION 2 OF NEW YORK STATE EDUCATION LAW

MONTGOMERY COUNTY

CULVERT REPLACEMENT

CONTRACT NO. 3 - TOWN OF AMSTERDAM CULVERT REPLACEMENT
CONTRACT NO. 4 - TOWN OF FLORIDA CULVERT REPLACEMENT

SHEET TITLE:

MCKINNEY ROAD 4B
SITE PLAN

SCALE: AS SHOWN

FILE NO.: 134-1601-250

DATE: OCTOBER 2016

SHEET NO.: B18

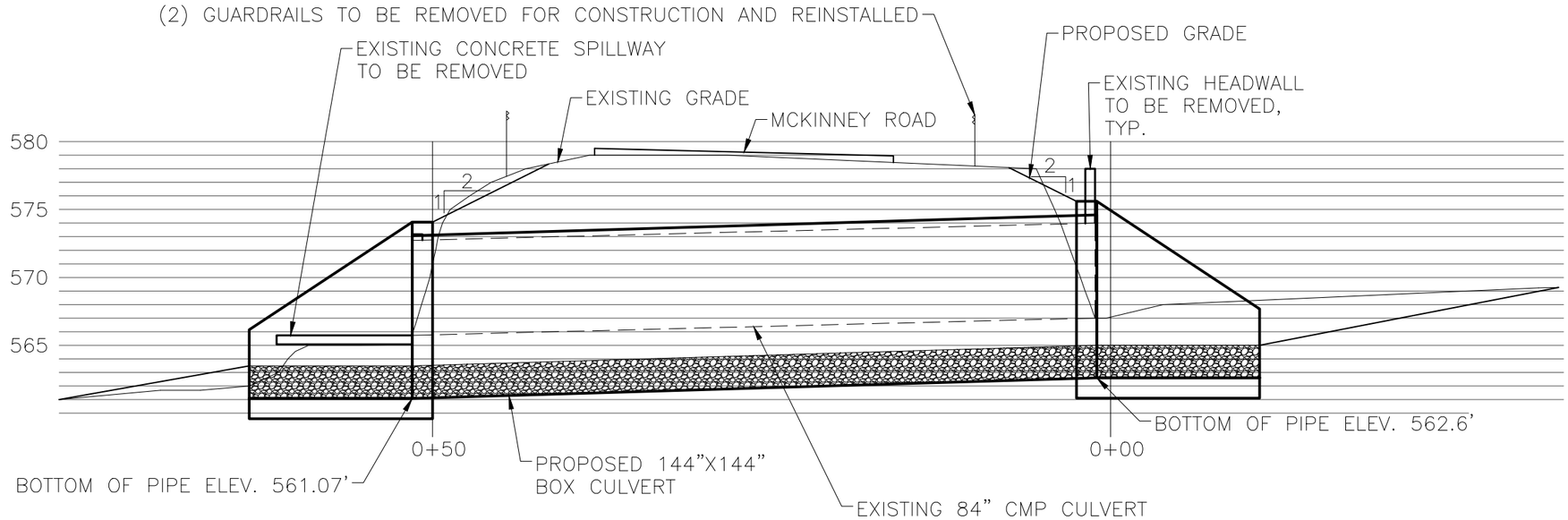

A / B19 MCKINNEY ROAD 4B PROFILE

GRAPHIC SCALE 5.0 0 2.5 5.0 10.0

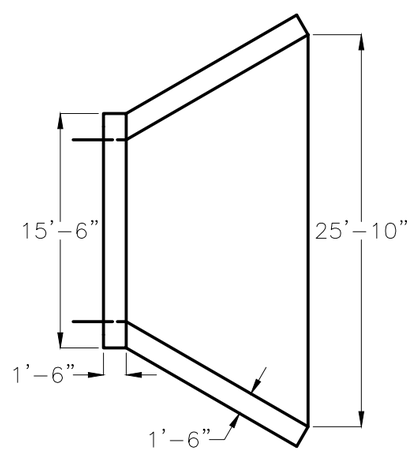

B / B19 HEADWALL PLAN

DO NOT SCALE

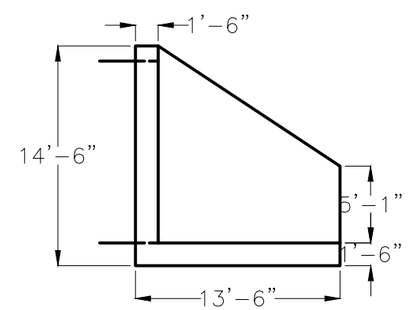

C / B19 HEADWALL ELEVATION

DO NOT SCALE

NO.	DATE	REVISION	BY
00	10/2016	ORIGINAL ISSUE	ATB
01	12/28/16	GOSR REVIEW ISSUE	BSN
02	2/24/17	ENVIRONMENTAL REVIEW ISSUE	BSN

JME
John M. McDonald Engineering
a member of PRIME Group

New York Office
7 South Church Street Schenectady, New York 12305
Ph: 518 382 1774 Fax: 518 382 1776
www.mcdonaldengineers.com www.primeeng.com

PROJ. ENGR.: ATB | DRAWN BY: BSN | CHECKED BY: JMM

JOHN M. McDONALD LICENSED PROFESSIONAL ENGINEER NO. 54506 STATE OF NEW YORK

UNAUTHORIZED ALTERATIONS TO THIS DOCUMENT IS A VIOLATION OF SECTION 7209 SUBDIVISION 2 OF NEW YORK STATE EDUCATION LAW

MONTGOMERY COUNTY

CULVERT REPLACEMENT

CONTRACT NO. 3 - TOWN OF AMSTERDAM CULVERT REPLACEMENT
CONTRACT NO. 4 - TOWN OF FLORIDA CULVERT REPLACEMENT

SHEET TITLE:

MCKINNEY ROAD 4B PROFILE

SCALE: AS SHOWN

FILE NO.: 134-1601-253

DATE: OCTOBER 2016

SHEET NO.: B19

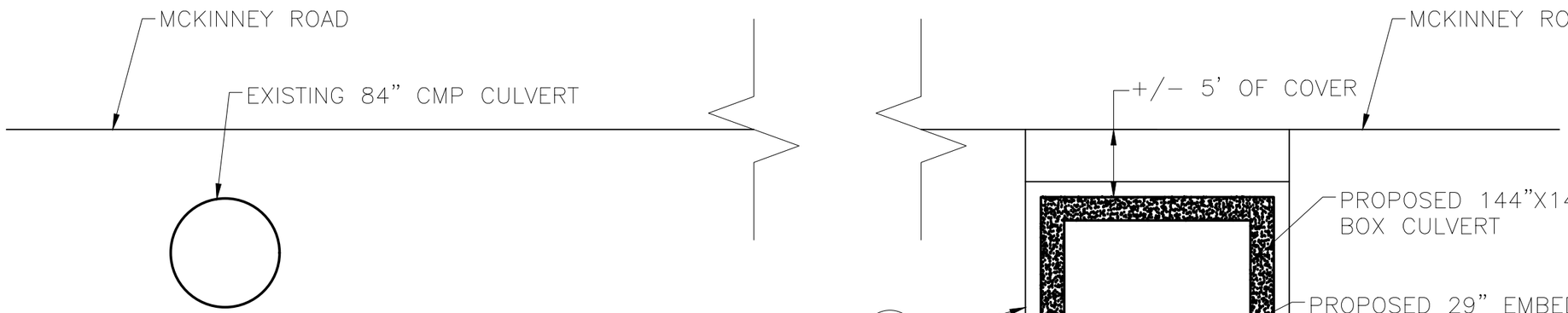

A / B20 EXISTING CROSS SECTION

DO NOT SCALE

B / B20 PROPOSED CROSS SECTION

DO NOT SCALE

NO.	DATE	REVISION	BY
00	10/2016	ORIGINAL ISSUE	ATB
01	12/28/16	GOSR REVIEW ISSUE	BSN
02	2/24/17	ENVIRONMENTAL REVIEW ISSUE	BSN

JME
John M. McDonald Engineering
a member of PRIME Group

New York Office
7 South Church Street Schenectady, New York 12305
Ph: 518 382 1774 Fax: 518 382 1776
www.mcdonaldengineers.com www.primeeng.com

PROJ. ENGR.: ATB | DRAWN BY: BSN | CHECKED BY: JMM

LICENSED PROFESSIONAL ENGINEER JOHN M. McDONALD NO. 54506 STATE OF NEW YORK

UNAUTHORIZED ALTERATIONS TO THIS DOCUMENT IS A VIOLATION OF SECTION 7209 SUBDIVISION 2 OF NEW YORK STATE EDUCATION LAW.

MONTGOMERY COUNTY

CULVERT REPLACEMENT

CONTRACT NO. 3 - TOWN OF AMSTERDAM CULVERT REPLACEMENT
CONTRACT NO. 4 - TOWN OF FLORIDA CULVERT REPLACEMENT

SHEET TITLE:

MCKINNEY ROAD 4B
CROSS SECTIONS

SCALE: AS SHOWN

FILE NO.: 134-1601-256

DATE: OCTOBER 2016

SHEET NO.: B20

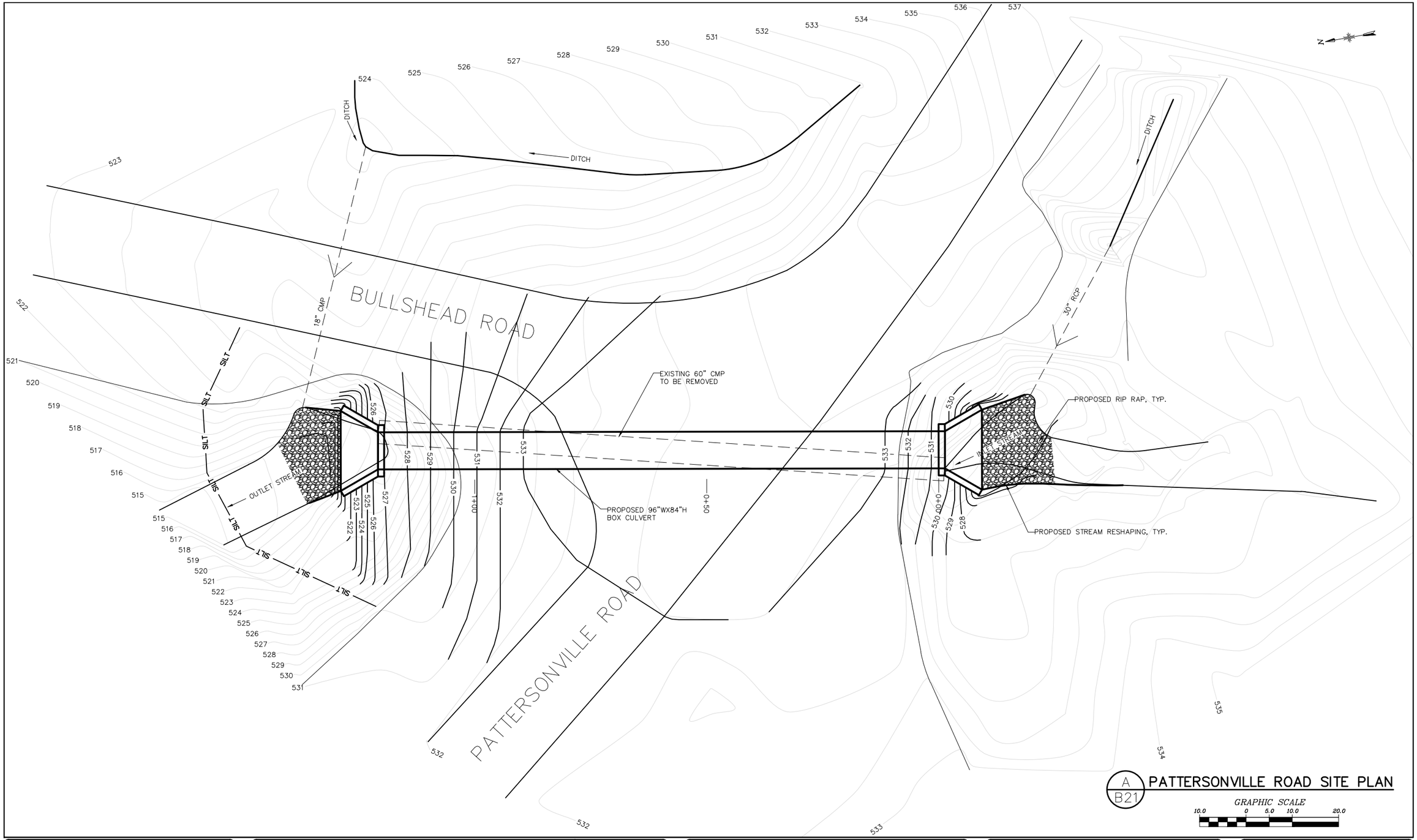

A
B21

PATTERSONVILLE ROAD SITE PLAN

GRAPHIC SCALE
10.0 0 5.0 10.0 20.0

NO.	DATE	REVISION	BY
00	10/2016	ORIGINAL ISSUE	ATB
01	12/28/16	GOSR REVIEW ISSUE	BSN
02	2/24/17	ENVIRONMENTAL REVIEW ISSUE	BSN

JME
John M. McDonald Engineering, P.C.
a member of PRIME Group®

New York Office
7 South Church Street Schenectady, New York 12305
Ph: 518 382 1774 Fax: 518 382 1776
www.mcdonaldengineers.com www.primeeng.com

PROJ. ENGR.: ATB | DRAWN BY: BSN | CHECKED BY: JMM

LICENSED PROFESSIONAL ENGINEER
JOHN M. McDONALD
NO. 54506
STATE OF NEW YORK

UNAUTHORIZED ALTERATIONS TO THIS DOCUMENT IS A VIOLATION OF SECTION 7209 SUBDIVISION 2 OF NEW YORK STATE EDUCATION LAW

MONTGOMERY COUNTY

MONTGOMERY COUNTY CULVERT
REPLACEMENT

SHEET TITLE:

PATTERSONVILLE ROAD
SITE PLAN

SCALE: AS SHOWN

FILE NO.: 134-1601-260

DATE: OCTOBER 2016

SHEET NO.: B21

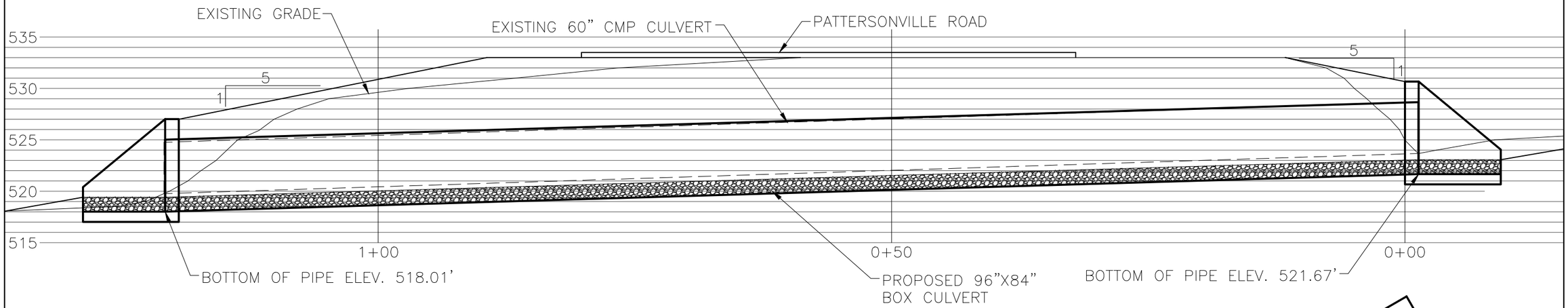

A / B22 PATTERSONVILLE ROAD PROFILE

GRAPHIC SCALE
5.0 0 2.5 5.0 10.0

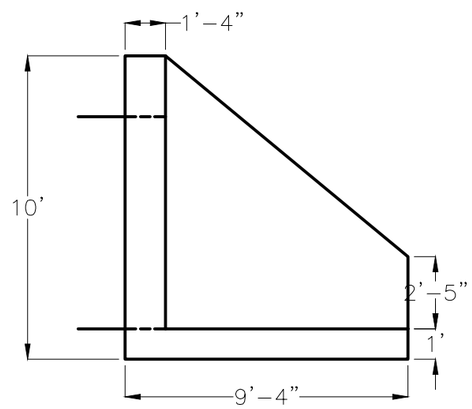

B / B22 HEADWALL ELEVATION

DO NOT SCALE

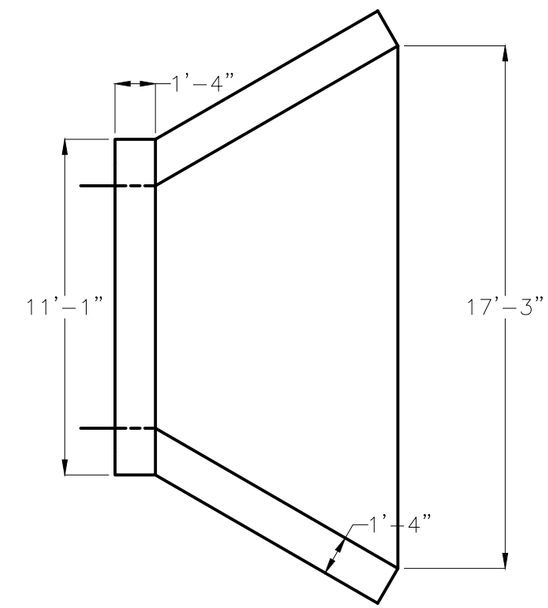

C / B22 HEADWALL PLAN

DO NOT SCALE

NO.	DATE	REVISION	BY
00	10/2016	ORIGINAL ISSUE	ATB
01	12/28/16	GOSR REVIEW ISSUE	BSN
02	2/24/17	ENVIRONMENTAL REVIEW ISSUE	BSN

JME
John M. McDonald Engineering, P.C.
a member of PRIME Group

New York Office
7 South Church Street Schenectady, New York 12305
Ph: 518 382 1774 Fax: 518 382 1776
www.mcdonaldengineers.com www.primeeng.com

PROJ. ENGR.: ATB | DRAWN BY: BSN | CHECKED BY: JMM

LICENSED PROFESSIONAL ENGINEER JOHN M. McDONALD NO. 54506 STATE OF NEW YORK

UNAUTHORIZED ALTERATIONS TO THIS DOCUMENT IS A VIOLATION OF SECTION 7209 SUBDIVISION 2 OF NEW YORK STATE EDUCATION LAW

MONTGOMERY COUNTY

CULVERT REPLACEMENT

CONTRACT NO. 3 - TOWN OF AMSTERDAM CULVERT REPLACEMENT
CONTRACT NO. 4 - TOWN OF FLORIDA CULVERT REPLACEMENT

SHEET TITLE:

PATTERSONVILLE ROAD PROFILE

SCALE: AS SHOWN

FILE NO.: 134-1601-263

DATE: OCTOBER 2016

SHEET NO.: B22

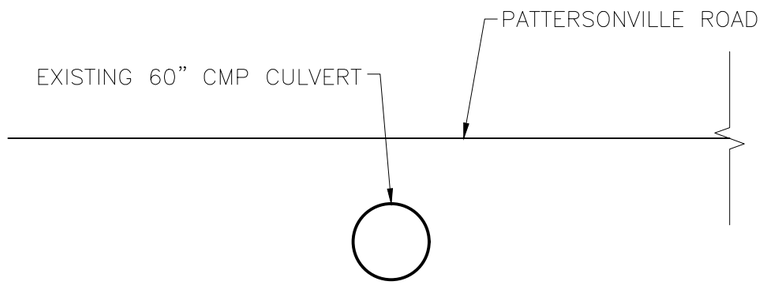

A / B23 EXISTING CROSS SECTION

DO NOT SCALE

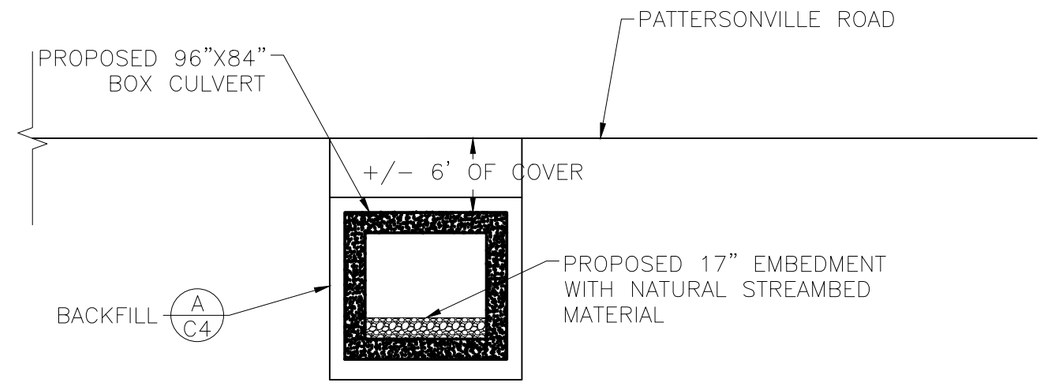

B / B23 PROPOSED CROSS SECTION

DO NOT SCALE

NO.	DATE	REVISION	BY
00	10/2016	ORIGINAL ISSUE	ATB
01	12/28/16	GOSR REVIEW ISSUE	BSN
02	2/24/17	ENVIRONMENTAL REVIEW ISSUE	BSN

JME
John M. McDonald Engineering, P.C.
a member of PRIMEES Group®

New York Office
7 South Church Street Schenectady, New York 12305
Ph: 518 382 1774 Fax: 518 382 1776
www.mcdonaldengineers.com www.primeeng.com

PROJ. ENGR.: ATB | DRAWN BY: BSN | CHECKED BY: JMM

LICENSED PROFESSIONAL ENGINEER JOHN M. McDONALD NO. 54506 STATE OF NEW YORK

UNAUTHORIZED ALTERATIONS TO THIS DOCUMENT IS A VIOLATION OF SECTION 7209 SUBDIVISION 2 OF NEW YORK STATE EDUCATION LAW

MONTGOMERY COUNTY

CULVERT REPLACEMENT

CONTRACT NO. 3 - TOWN OF AMSTERDAM CULVERT REPLACEMENT
CONTRACT NO. 4 - TOWN OF FLORIDA CULVERT REPLACEMENT

SHEET TITLE:

PATTERSONVILLE ROAD
CROSS SECTIONS

SCALE: AS SHOWN

FILE NO.: 134-1601-266

DATE: OCTOBER 2016

SHEET NO.: B23

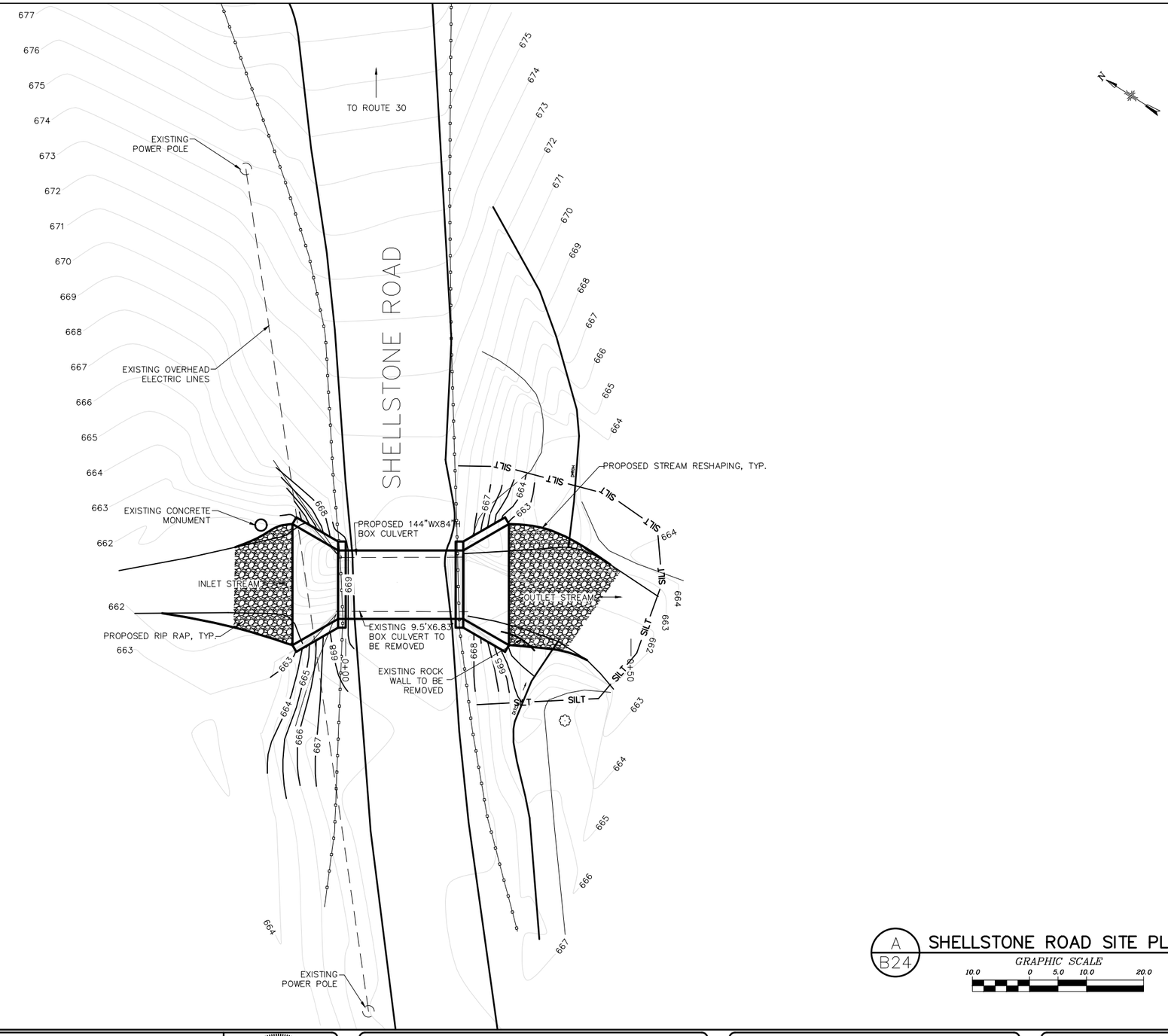

A
B24

SHELLSTONE ROAD SITE PLAN

GRAPHIC SCALE
10.0 0 5.0 10.0 20.0

NO.	DATE	REVISION	BY
00	10/2016	ORIGINAL ISSUE	ATB
01	12/28/16	GOSR REVIEW ISSUE	BSN
02	2/24/17	ENVIRONMENTAL REVIEW ISSUE	BSN

JME
John M. McDonald Engineering, P.C.
a member of PRIMEER Group®

New York Office
7 South Church Street Schenectady, New York 12305
Ph: 518 382 1774 Fax: 518 382 1776
www.mcdonaldengineers.com www.primeeng.com

PROJ. ENGR.: ATB | DRAWN BY: BSN | CHECKED BY: JMM

LICENSED PROFESSIONAL ENGINEER JOHN M. McDONALD NO. 54506 STATE OF NEW YORK

UNAUTHORIZED ALTERATIONS TO THIS DOCUMENT IS A VIOLATION OF SECTION 7209 SUBDIVISION 2 OF NEW YORK STATE EDUCATION LAW

MONTGOMERY COUNTY

CULVERT REPLACEMENT

CONTRACT NO. 3 - TOWN OF AMSTERDAM CULVERT REPLACEMENT
CONTRACT NO. 4 - TOWN OF FLORIDA CULVERT REPLACEMENT

SHEET TITLE:

SHELLSTONE ROAD
SITE PLAN

SCALE: AS SHOWN

FILE NO.: 134-1601-270

DATE: OCTOBER 2016

SHEET NO.: B24

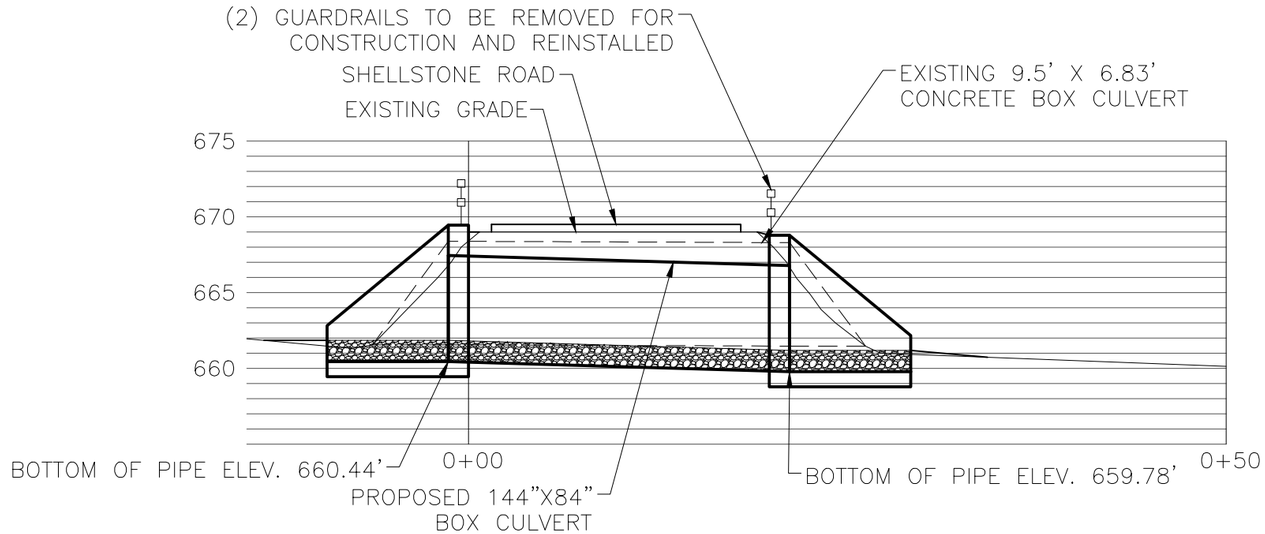

A / B25 SHELLSTONE ROAD BOX CULVERT PROFILE

GRAPHIC SCALE
5.0 0 2.5 5.0 10.0

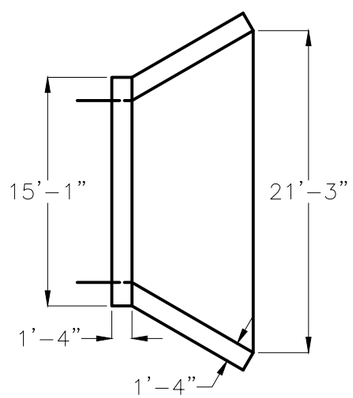

B / B25 HEADWALL PLAN
DO NOT SCALE

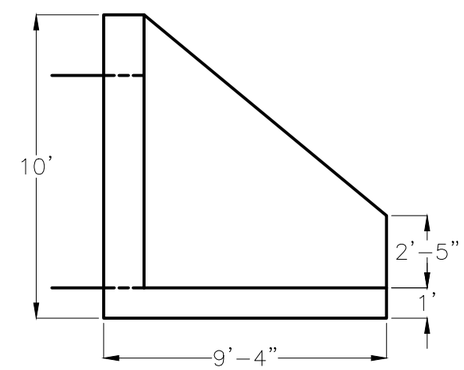

C / B25 HEADWALL ELEVATION
DO NOT SCALE

NO.	DATE	REVISION	BY
00	10/2016	ORIGINAL ISSUE	ATB
01	12/28/16	GOSR REVIEW ISSUE	BSN
02	2/24/17	ENVIRONMENTAL REVIEW ISSUE	BSN

JME
John M. McDonald Engineering, P.C.
a member of PRIMEER Group®
New York Office
7 South Church Street Schenectady, New York 12305
Ph: 518 382 1774 Fax: 518 382 1776
www.mcdonaldengineers.com www.primeeng.com
PROJ. ENGR.: ATB | DRAWN BY: BSN | CHECKED BY: JMM

LICENSED PROFESSIONAL ENGINEER JOHN M. McDONALD NO. 54506 STATE OF NEW YORK
UNAUTHORIZED ALTERATIONS TO THIS DOCUMENT IS A VIOLATION OF SECTION 7209 SUBDIVISION 2 OF NEW YORK STATE EDUCATION LAW

MONTGOMERY COUNTY

CULVERT REPLACEMENT

CONTRACT NO. 3 - TOWN OF AMSTERDAM CULVERT REPLACEMENT
CONTRACT NO. 4 - TOWN OF FLORIDA CULVERT REPLACEMENT

SHEET TITLE:
SHELLSTONE ROAD PROFILE

SCALE: AS SHOWN
FILE NO.: 134-1601-273
DATE: OCTOBER 2016
SHEET NO.: B25

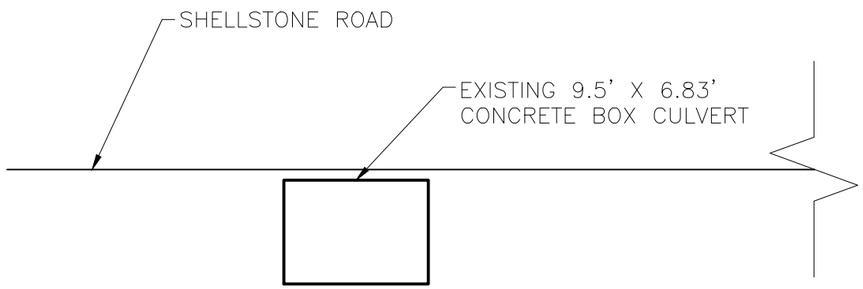

A / B26 EXISTING CROSS SECTION

DO NOT SCALE

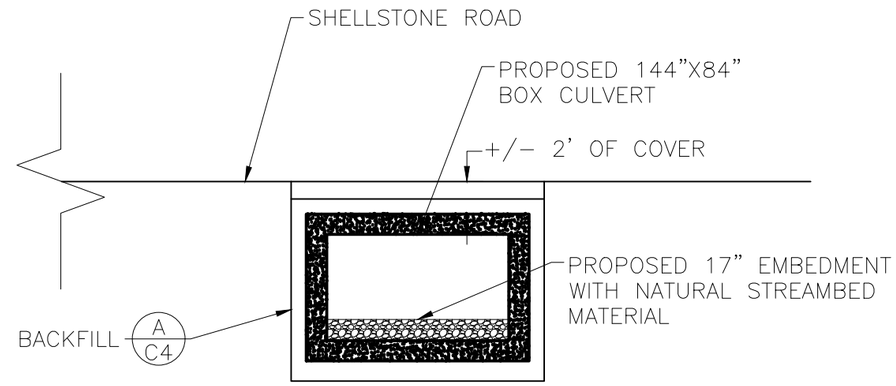

B / B26 PROPOSED CROSS SECTION

DO NOT SCALE

NO.	DATE	REVISION	BY
00	10/2016	ORIGINAL ISSUE	ATB
01	12/28/16	GOSR REVIEW ISSUE	BSN
02	2/24/17	ENVIRONMENTAL REVIEW ISSUE	BSN

JME
John M. McDonald Engineering, P.C.
a member of PRIMEER Group®

New York Office
7 South Church Street Schenectady, New York 12305
Ph: 518 382 1774 Fax: 518 382 1776
www.mcdonaldengineers.com www.primeeng.com

PROJ. ENGR.: ATB | DRAWN BY: BSN | CHECKED BY: JMM

LICENSED PROFESSIONAL ENGINEER JOHN M. McDONALD NO. 54508 STATE OF NEW YORK

UNAUTHORIZED ALTERATIONS TO THIS DOCUMENT IS A VIOLATION OF SECTION 7209 SUBDIVISION 2 OF NEW YORK STATE EDUCATION LAW

MONTGOMERY COUNTY

CULVERT REPLACEMENT

CONTRACT NO. 3 - TOWN OF AMSTERDAM CULVERT REPLACEMENT
CONTRACT NO. 4 - TOWN OF FLORIDA CULVERT REPLACEMENT

SHEET TITLE:

SHELLSTONE ROAD
CROSS SECTIONS

SCALE: AS SHOWN

FILE NO.: 134-1601-276

DATE: OCTOBER 2016

SHEET NO.: B26

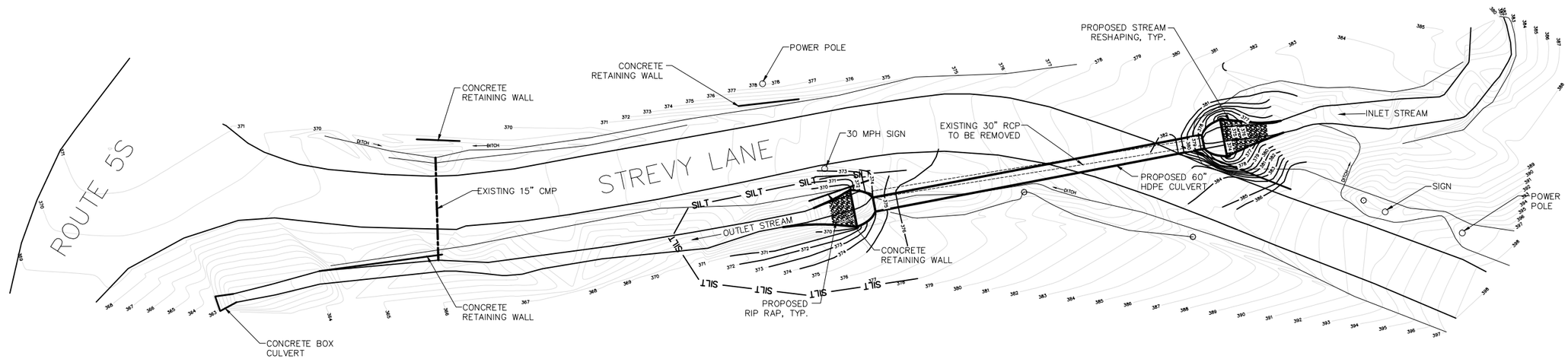

A
B27

STREVY LANE SITE PLAN

GRAPHIC SCALE
20.0 0 10.0 20.0 40.0

NO.	DATE	REVISION	BY
00	10/2016	ORIGINAL ISSUE	ATB
01	12/28/16	GOSR REVIEW ISSUE	BSN
02	2/24/17	ENVIRONMENTAL REVIEW ISSUE	BSN

JME
John M. McDonald Engineering, P.C.
a member of PRIME Group

New York Office
7 South Church Street Schenectady, New York 12305
Ph: 518 382 1774 Fax: 518 382 1776
www.mcdonaldengineers.com www.primeeng.com

PROJ. ENGR.: ATB | DRAWN BY: BSN | CHECKED BY: JMM

JOHN M. McDONALD PROFESSIONAL ENGINEER LICENSED NO. 54506 STATE OF NEW YORK

UNAUTHORIZED ALTERATIONS TO THIS DOCUMENT IS A VIOLATION OF SECTION 7209 SUBDIVISION 2 OF NEW YORK STATE EDUCATION LAW

MONTGOMERY COUNTY

CULVERT REPLACEMENT

CONTRACT NO. 3 - TOWN OF AMSTERDAM CULVERT REPLACEMENT
CONTRACT NO. 4 - TOWN OF FLORIDA CULVERT REPLACEMENT

SHEET TITLE:

STREVY LANE
SITE PLAN

SCALE: AS SHOWN

FILE NO.: 134-1601-280

DATE: OCTOBER 2016

SHEET NO.: B27

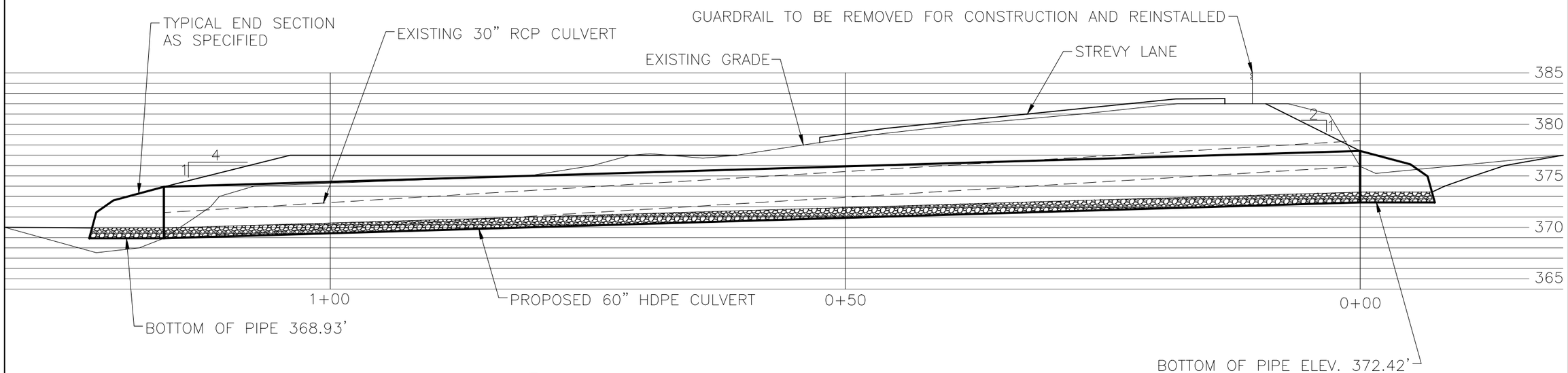

A
B28

STREVY LANE CULVERT PROFILE

GRAPHIC SCALE
5.0 0 2.5 5.0 10.0

NO.	DATE	REVISION	BY
00	10/2016	ORIGINAL ISSUE	ATB
01	12/28/16	GOSR REVIEW ISSUE	BSN
02	2/24/17	ENVIRONMENTAL REVIEW ISSUE	BSN

JME
John M. McDonald Engineering, P.C.
a member of PRIME Group®

New York Office
7 South Church Street Schenectady, New York 12305
Ph: 518 382 1774 Fax: 518 382 1776
www.mcdonaldengineers.com www.primeeng.com

PROJ. ENGR.: ATB | DRAWN BY: BSN | CHECKED BY: JMM

JOHN M. McDONALD PROFESSIONAL ENGINEER LICENSED STATE OF NEW YORK NO. 54508

UNAUTHORIZED ALTERATIONS TO THIS DOCUMENT IS A VIOLATION OF SECTION 7209 SUBDIVISION 2 OF NEW YORK STATE EDUCATION LAW

MONTGOMERY COUNTY

CULVERT REPLACEMENT

CONTRACT NO. 3 - TOWN OF AMSTERDAM CULVERT REPLACEMENT
CONTRACT NO. 4 - TOWN OF FLORIDA CULVERT REPLACEMENT

SHEET TITLE:

STREVY LANE PROFILE

SCALE: AS SHOWN

FILE NO.: 134-1601-283

DATE: OCTOBER 2016

SHEET NO.: B28

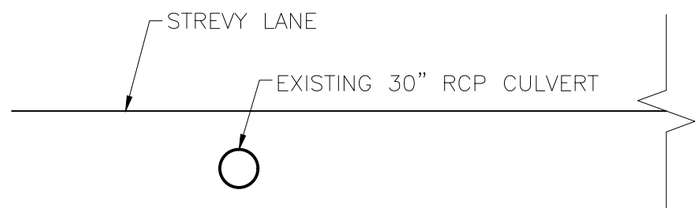

A / B29 EXISTING CROSS SECTION

DO NOT SCALE

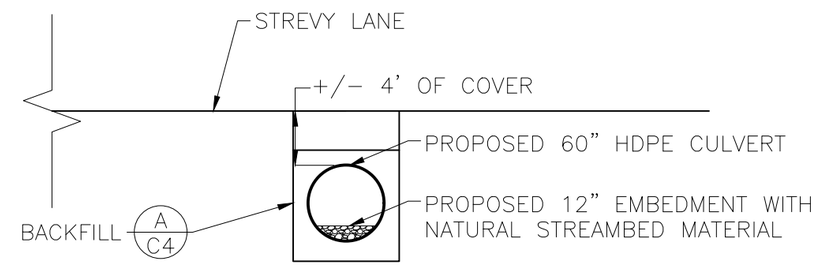

B / B29 PROPOSED CROSS SECTION

DO NOT SCALE

NO.	DATE	REVISION	BY
00	10/2016	ORIGINAL ISSUE	ATB
01	12/28/16	GOSR REVIEW ISSUE	BSN
02	2/24/17	ENVIRONMENTAL REVIEW ISSUE	BSN

JME
John M. McDonald Engineering, P.C.
a member of PRIME Group

New York Office
7 South Church Street Schenectady, New York 12305
Ph: 518 382 1774 Fax: 518 382 1776
www.mcdonaldengineers.com www.primeeng.com

PROJ. ENGR.: ATB | DRAWN BY: BSN | CHECKED BY: JMM

LICENSED PROFESSIONAL ENGINEER JOHN M. McDONALD NO. 54506 STATE OF NEW YORK

UNAUTHORIZED ALTERATIONS TO THIS DOCUMENT IS A VIOLATION OF SECTION 7209 SUBDIVISION 2 OF NEW YORK STATE EDUCATION LAW

MONTGOMERY COUNTY

CULVERT REPLACEMENT

CONTRACT NO. 3 - TOWN OF AMSTERDAM CULVERT REPLACEMENT
CONTRACT NO. 4 - TOWN OF FLORIDA CULVERT REPLACEMENT

SHEET TITLE:

STREVY LANE CROSS SECTIONS

SCALE: AS SHOWN

FILE NO.: 134-1601-286

DATE: OCTOBER 2016

SHEET NO.: B29

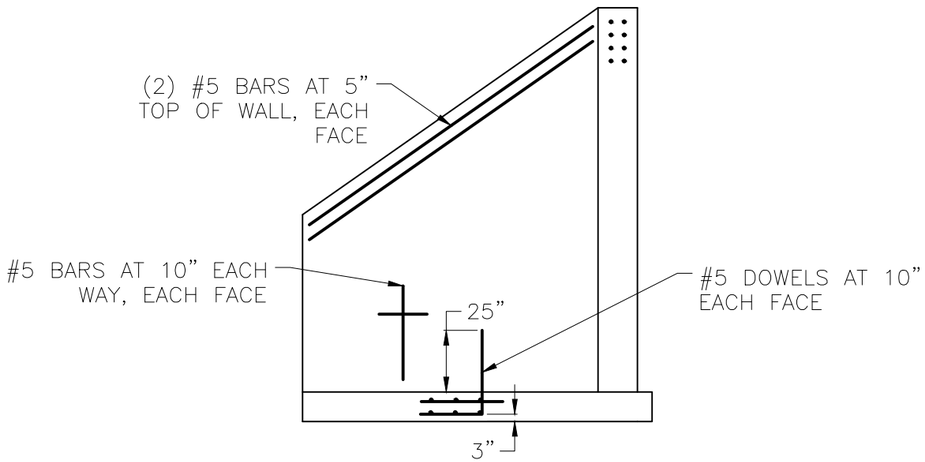

A / C1 WING WALL DETAIL
DO NOT SCALE

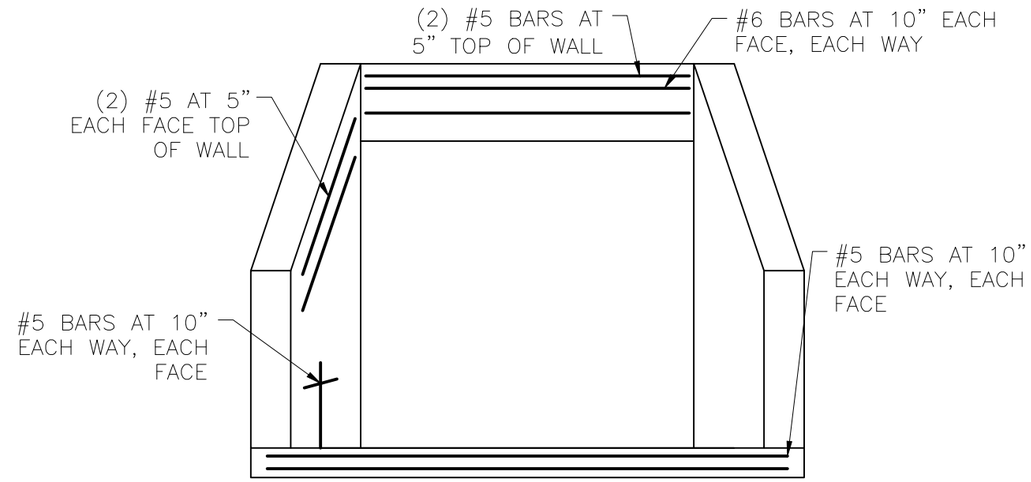

B / C1 HEAD WALL DETAIL
DO NOT SCALE

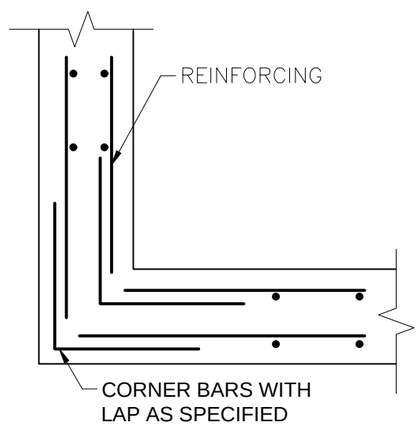

C / C1 CORNER DETAIL
DO NOT SCALE

REINFORCEMENT NOTES:

1. COVER SHALL BE 3" UNLESS NOTED OTHERWISE

2. BAR LAPS SHALL BE 40 BAR DIAMETERS UNLESS NOTED OTHERWISE

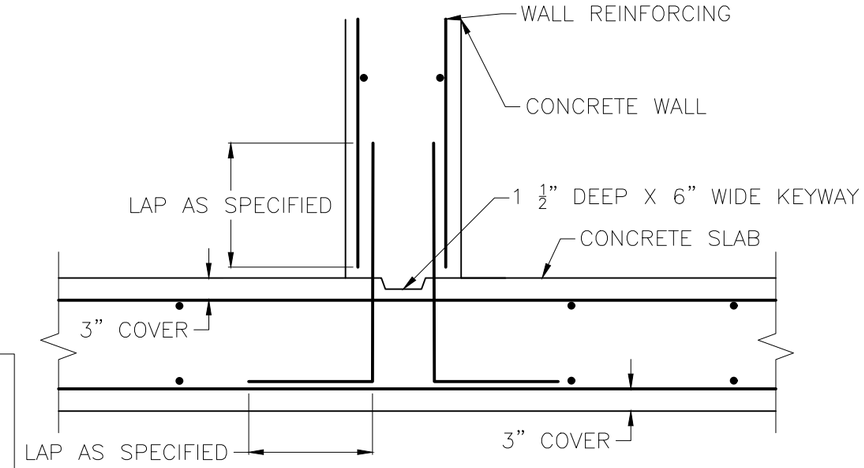

D / C1 SLAB TO WALL DETAIL
DO NOT SCALE

NO.	DATE	REVISION	BY
00	10/2016	ORIGINAL ISSUE	ATB
01	12/28/16	GOSR REVIEW ISSUE	BSN
02	2/24/17	ENVIRONMENTAL REVIEW ISSUE	BSN

JME
John M. McDonald Engineering, P.C.
a member of PRIME Group
New York Office
7 South Church Street Schenectady, New York 12305
Ph: 518 382 1774 Fax: 518 382 1776
www.mcdonaldengineers.com www.primeeng.com

PROJ. ENGR.: ATB | DRAWN BY: BSN | CHECKED BY: JMM

JOHN M. McDONALD No. 54506 STATE OF NEW YORK

UNAUTHORIZED ALTERATIONS TO THIS DOCUMENT IS A VIOLATION OF SECTION 7209 SUBDIVISION 2 OF NEW YORK STATE EDUCATION LAW

MONTGOMERY COUNTY

MIAMI AVENUE CULVERT REPLACEMENT

CONTRACT NO. 1 - CULVERT MATERIALS
CONTRACT NO. 2 - GENERAL CONSTRUCTION

SHEET TITLE:

CONCRETE DETAILS

SCALE: AS SHOWN

FILE NO.: 134-1601-300

DATE: OCTOBER 2016

SHEET NO.: C1

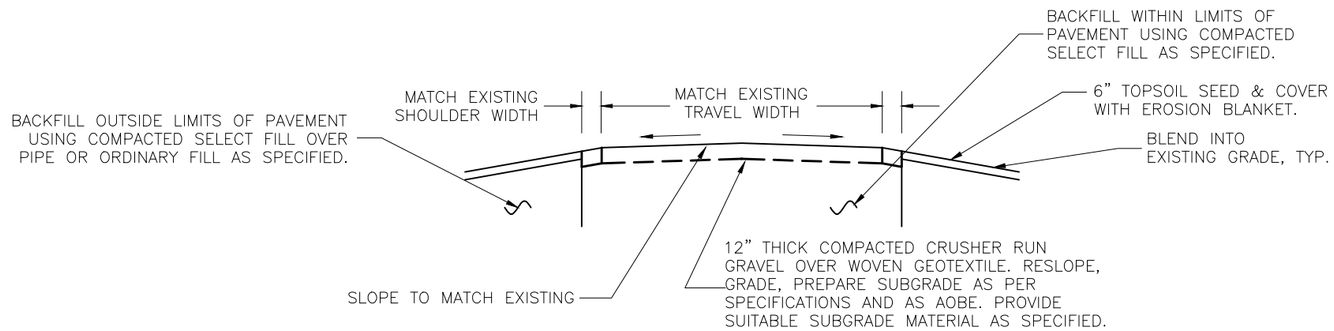

A/C2 **ROADWAY DETAIL**

NOT TO SCALE

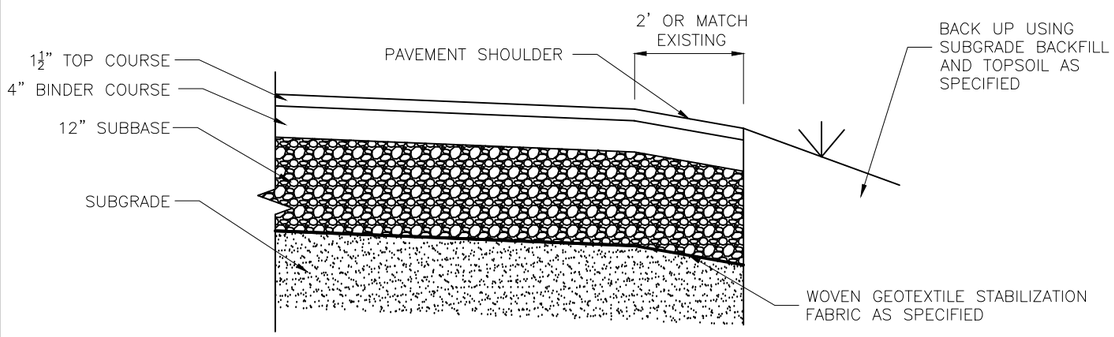

B/C2 **PAVING DETAIL W/ PAVED SHOULDER**

NOT TO SCALE

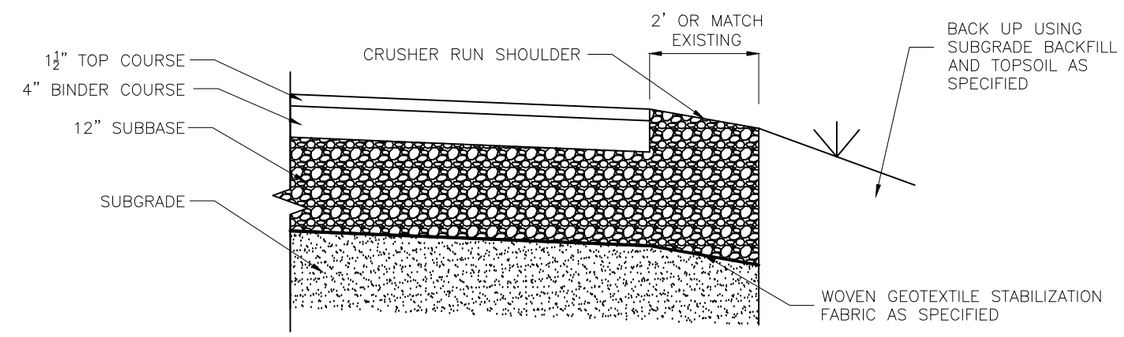

C/C2 **PAVING DETAIL W/ UNPAVED SHOULDER**

NOT TO SCALE

NO.	DATE	REVISION	BY
00	10/2016	ORIGINAL ISSUE	ATB
01	12/28/16	GOSR REVIEW ISSUE	BSN
02	2/24/17	ENVIRONMENTAL REVIEW ISSUE	BSN

JME JOHN M. MCDONALD ENGINEERING, P.C.
7 South Church Street Schenectady, New York 12305
Ph: 518 382 1774 Fax: 518 382 1776 www.mcdonaldengineers.com

PROJ. ENGR.: ATB | DRAWN BY: BSN | CHECKED BY: JMM

LICENSED PROFESSIONAL ENGINEER JOHN M. MCDONALD NO. 54596 STATE OF NEW YORK
UNAUTHORIZED ALTERATIONS TO THIS DOCUMENT IS A VIOLATION OF SECTION 7209 SUBDIVISION 2 OF NEW YORK STATE EDUCATION LAW

MONTGOMERY COUNTY

CULVERT REPLACEMENT

CONTRACT NO. 3 - TOWN OF AMSTERDAM CULVERT REPLACEMENT
CONTRACT NO. 4 - TOWN OF FLORIDA CULVERT REPLACEMENT

SHEET TITLE:

PAVING DETAILS

SCALE: AS SHOWN

FILE NO.: 134-1601-310

DATE: OCTOBER 2016

SHEET NO.: C2

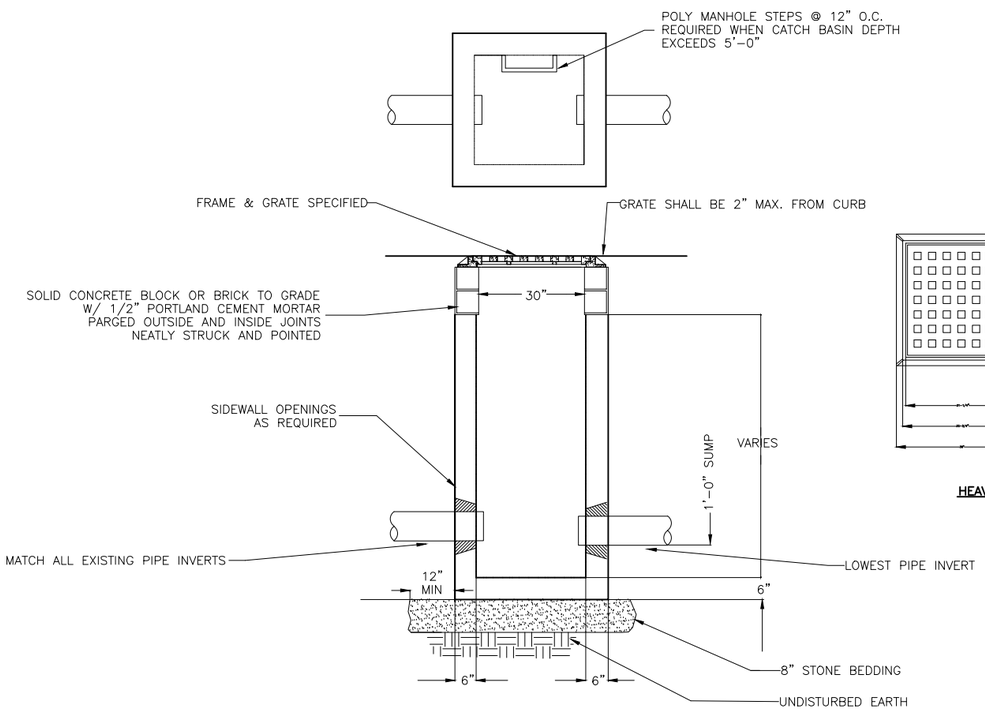

A/C3 CATCH BASIN DETAILS
NOT TO SCALE

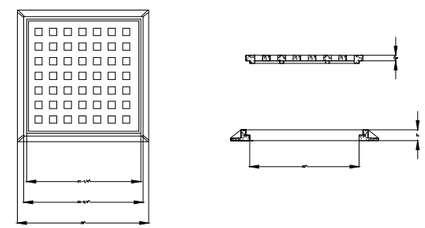

HEAVY DUTY 2'-6" SQUARE FRAME & GRATE

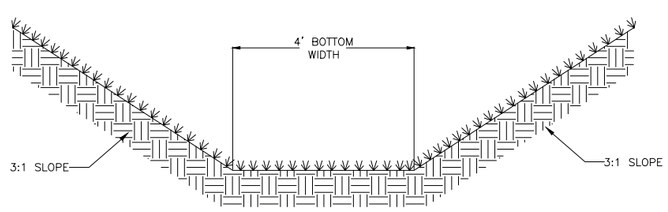

B/C3 DRAINAGE DITCH, TYP.
NOT TO SCALE

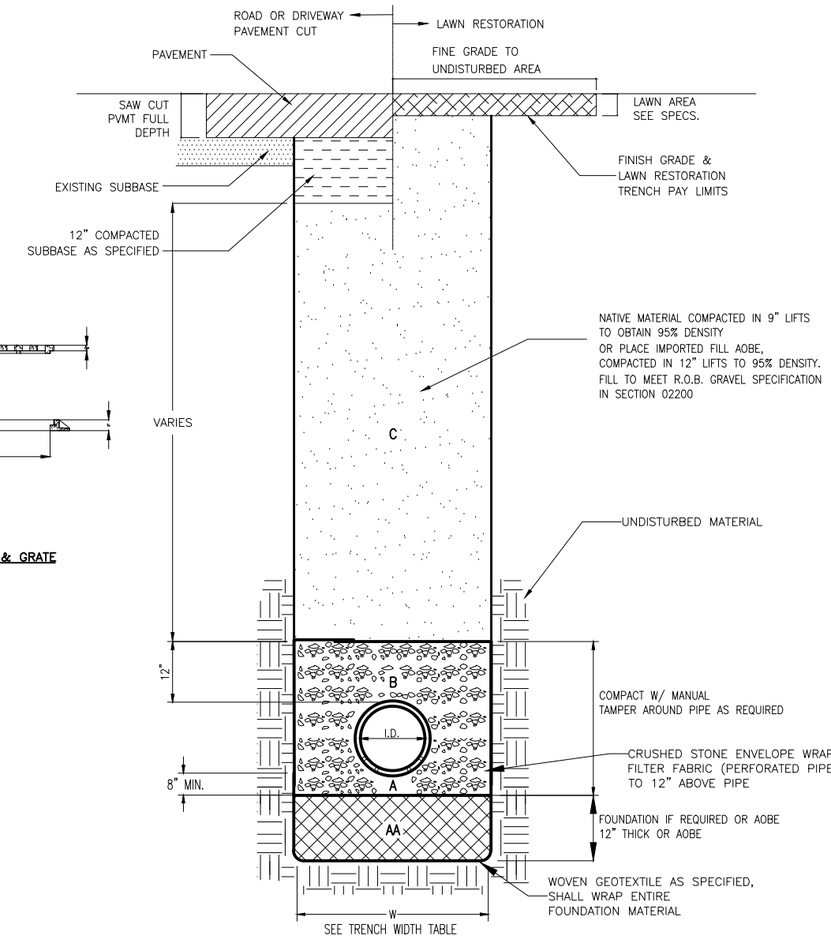

AA PIPE FOUNDATION MATERIAL AS REQUIRED OR AOBE.

A&B CRUSHED STONE BEDDING (SIZE 1 & 2 MIX).

C NATIVE SOIL BACKFILLED IN AREAS TO TOP OF SUBGRADE.
IF ENGINEER DETERMINES MATERIAL IS NOT SUITABLE,
INSTALL IMPORTED R.O.B. AS PER SPECIFICATIONS.

TRENCH WIDTH TABLE

PIPE SIZE I.D. – IN	MAX. TRENCH WIDTH ALLOWED MAX. PAY LIMITS = I.D. + 24"
4	28
6	30
8	32
10	34
12	36
16	40
18	42
20	44
24	48
36	60

C/C3 TYPICAL TRENCH DETAIL
NOT TO SCALE

NO.	DATE	REVISION	BY
00	10/2016	ORIGINAL ISSUE	ATB
01	12/28/16	GOSR REVIEW ISSUE	BSN
02	2/24/17	ENVIRONMENTAL REVIEW ISSUE	BSN

JME
John M. McDonald Engineering
a member of PRIMEEng Group®
New York Office
7 South Church Street Schenectady, New York 12305
Ph: 518 382 1774 Fax: 518 382 1776
www.mcdonaldengineers.com www.primeeng.com

PROJ. ENGR.: ATB | DRAWN BY: BSN | CHECKED BY: JMM

LICENSED PROFESSIONAL ENGINEER JOHN M. McDONALD NO. 54506 STATE OF NEW YORK

UNAUTHORIZED ALTERATIONS TO THIS DOCUMENT IS A VIOLATION OF SECTION 7209 SUBDIVISION 2 OF NEW YORK STATE EDUCATION LAW

MONTGOMERY COUNTY

CULVERT REPLACEMENT

CONTRACT NO. 3 - TOWN OF AMSTERDAM CULVERT REPLACEMENT
CONTRACT NO. 4 - TOWN OF FLORIDA CULVERT REPLACEMENT

SHEET TITLE:

STORM SEWER DETAILS

SCALE: AS SHOWN

FILE NO.: 134-1601-320

DATE: OCTOBER 2016

SHEET NO.: C3

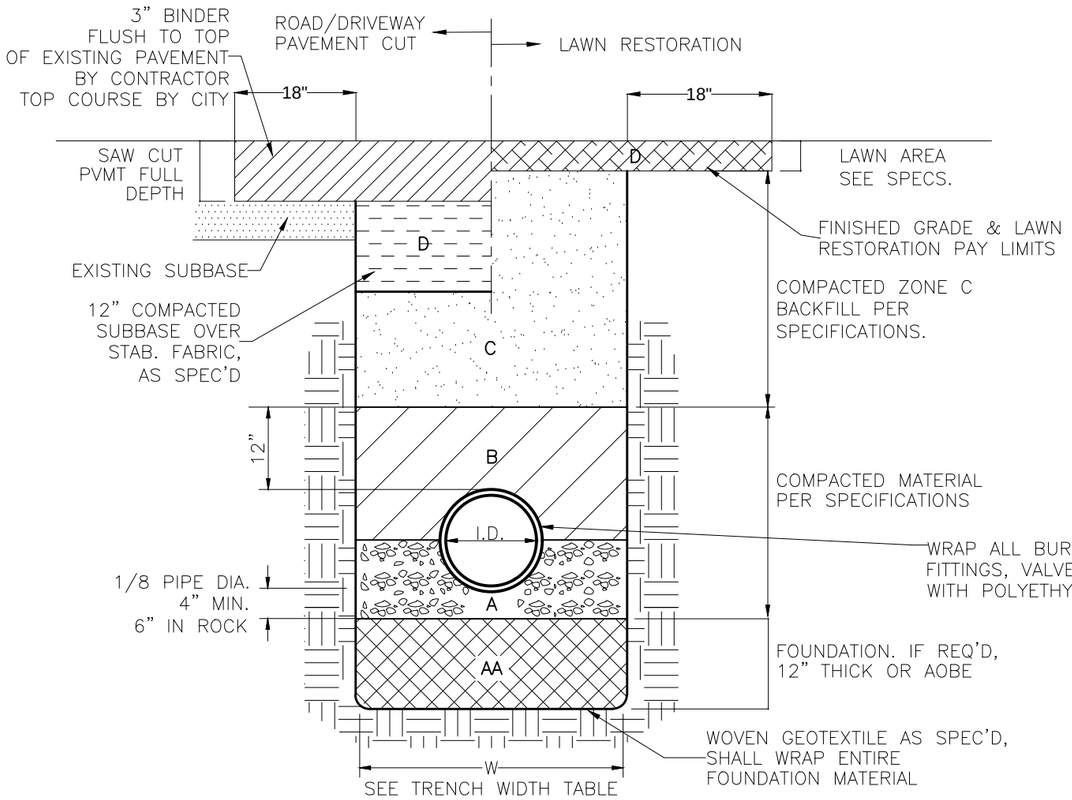

A / C4 TYPICAL TRENCH DETAIL

NOT TO SCALE

TRENCH WIDTH TABLE	
PIPE SIZE I.D. – IN	MAX. TRENCH WIDTH ALLOWED MAX. PAY LIMITS = I.D. + 24"
2	26
4	28
6	30
8	32
10	34
12	36
16	40
18	42
20	44
24	48
36	60

ZONE	BACKFILL DESCRIPTION
A	PIPE BEDDING MATERIAL AS REQUIRED BY SPECIFICATIONS. UNLESS OTHERWISE NOTED ON DRAWINGS OR A.O.B.E.
AA	STONE BEDDING WILL BE USED IN–LIEU OF PIPE BEDDING IN WET OR UNSTABLE TRENCH CONDITIONS A.O.B.E.
B	SELECT COMPACTED BACKFILL. AS REQUIRED BY SPECIFICATIONS.
C	NATIVE SOIL BACKFILLED & COMPACTED IN AREAS OTHER THAN ROADS, DRIVEWAYS AND SIDEWALKS. OTHERWISE BACKFILL AND COMPACT W/ RUN OF BANK GRAVEL PER SPECIFICATIONS
D	INSTALL ZONE D MATERIALS AS NOTED BELOW AND PER SPECIFICATIONS. 4" MIN. TOP SOIL IN LAWN AREAS. COMPACTED DOT 304.5 GRAVEL OR CRUSHER RUN GRAVEL SUBBASE 12" MIN. IN ROADS, 8" MIN. IN DRIVEWAYS, AND 8" UNDER SIDEWALKS. SUBBASE TO BE 18" WIDER THAN TRENCH EACH SIDE 3" TYPE 3 AND 1.5" TYPE 6 OR 7 ASPHALT THICKNESS IN CITY ROADS. 1.5" TYPE 3 AND 1" TYPE 6 OR 7 ASPHALT THICKNESS IN DRIVEWAYS. PAVEMENT TO BE 18" WIDER THAN TRENCH EACH SIDE. SAW CUT TOP COURSE. WHERE EXISTING THICKNESSES ARE GREATER, MATCH EXISTING.

NOTE:
LAYER D: FILL WITH ADDITIONAL SUBBASE TO BE EVEN WITH TOP OF EXISTING PAVEMENT FOR CITY TO BOX OUT PRIOR TO PAVING.

NO.	DATE	REVISION	BY
00	10/2016	ORIGINAL ISSUE	DPC
01	12/28/16	GOSR REVIEW ISSUE	BSN
02	2/24/17	ENVIRONMENTAL REVIEW ISSUE	BSN

JME
John M. McDonald Engineering, P.C.
a member of PRIME Group
New York Office
7 South Church Street Schenectady, New York 12305
Ph: 518 382 1774 Fax: 518 382 1776
www.mcdonaldengineers.com www.primeeng.com

PROJ. ENGR.: DPC | DRAWN BY: BSN | CHECKED BY: JMM

LICENSED PROFESSIONAL ENGINEER JOHN M. McDONALD NO. 54566 STATE OF NEW YORK

UNAUTHORIZED ALTERATIONS TO THIS DOCUMENT IS A VIOLATION OF SECTION 7209 SUBDIVISION 2 OF NEW YORK STATE EDUCATION LAW

MONTGOMERY COUNTY

CULVERT REPLACEMENT

CONTRACT NO. 3 - TOWN OF AMSTERDAM CULVERT REPLACEMENT
CONTRACT NO. 4 - TOWN OF FLORIDA CULVERT REPLACEMENT

SHEET TITLE:

TRENCH DETAILS

SCALE: AS SHOWN
FILE NO.: 134-1601-330
DATE: OCTOBER 2016
SHEET NO.: C4