Governor's Office of Storm Recovery

ANDREW M. CUOMO
Governor

LISA BOVA-HIATT
Executive Director

STATE ENVIRONMENTAL QUALITY REVIEW ACT
DETERMINATION OF NON-SIGNIFICANCE (NEGATIVE DECLARATION)

STILLWATER ROAD STORMWATER IMPROVEMENTS PROJECT

DATE: September 8, 2017

NAME OF ACTION: Stillwater Road Stormwater Improvements Project

LOCATION: Stillwater Road, Town of Conklin, Broome County, NY 13748

SEQRA CLASSIFICATION: [ ] Type I; [X] Unlisted

REVIEW TYPE: [X] Coordinated; [ ] Uncoordinated

DETERMINATION OF SIGNIFICANCE: [X] Negative Declaration; [ ] Positive Declaration

---

The Proposed Project:
The Governor's Office of Storm Recovery (GOSR) is managing the U.S. Department of Housing and Urban Development (HUD) Community Development Block Grant – Disaster Recovery (CDBG-DR) program pursuant to the Disaster Relief Appropriations Act of 2013 (Public Law 113-2, approved January 29, 2013). The New York State (NYS) Housing Trust Fund Corporation (HTFC), which administers the CDBG-DR program funds on behalf of GOSR, intends to approve funding for the stormwater drainage system along Stillwater Road, Town of Conklin, Broome County, New York, from the CDBG-DR Community Reconstruction and Infrastructure Program Fund.

The project involves the installation of a new stormwater drainage system within approximately 710 linear feet of Stillwater Road and approximately 150 feet through a privately-owned parcel that discharges into the Susquehanna River, to mitigate flooding in the area. There will be a permanent drainage easement through the private property. In addition, the proposed drainage system will pass beneath the Norkfolk Southern Railroad (see attached Site Plan).

The Town of Conklin anticipates the installation of a 36" HDPE corrugated pipe beneath Stillwater Road and the privately-owned property at a maximum depth of eight feet that outfalls through a flap gate into the Susquehanna River. The portion of pipe that is located beneath the Norfolk Southern Railroad will be encased with a 48" steel casing. In addition, approximately four manholes will be installed along Stillwater Road. Approximately 50 square feet of heavy stone will be placed around the outfall location on the Susquehanna River bank.

Purpose and Need:
Hurricane Irene and Tropical Storm Lee brought tremendous devastation to communities along the Susquehanna River. The torrential rains, coupled with saturated grounds and the fact that the Susquehanna River was still swollen from Hurricane Irene, led to massive flooding during Superstorm Sandy in Broome County, leaving many critical roads impassable. These extreme conditions caused the Stillwater Road neighborhood to be inundated with flood waters. The installation of a stormwater drainage system in this project area will enhance the resiliency of this neighborhood by reducing the risk of localized flooding. This

project is necessary to recover from Hurricane Irene and Tropical Storm Lee and it will reduce localized flooding for the residents along Stillwater Road during future storm events. Approximately 50 homes would be served by unimpeded access to the Stillwater Road neighborhood during flood events.

Existing Conditions:
New York State has experienced a number of storms (e.g., Hurricane Irene, Tropical Storm Lee) that have caused substantial damage over the last decade. As a result, this trend has increased the need for improved drainage systems along the Susquehanna River to support storm-stricken communities. The Town of Conklin's Stillwater Road neighborhood floods during extreme storm events, particularly at the intersection of Stillwater Road and Route 7A. Since Stillwater Road is the only primary access road out of the neighborhood, this proposed project will install a stormwater drainage system along a one-block long section of Stillwater Road to mitigate flooding.

Funding:
The total Project cost is estimated at $300,000. GOSR proposes to allocate funding pursuant to the U.S. Department of HUD CDBG-DR program as authorized by the Disaster Relief Appropriations Act of 2013 (Public Law 113-2, approved January 29, 2013). The NYS HTFC, which administers the CDBG-DR program funds on behalf of GOSR, intends to approve funding for the proposed Project as described in this notice.

Environmental Considerations:

Land Use, Zoning, Public Policy and Urban Design – The proposed Project is consistent with existing zoning regulations, land use types, building height and scale. The Project would maintain current land use and would therefore be compatible with existing land use. The proposed Project is allowable under this zoning as it is consistent with the current land use on the property and the adopted town comprehensive plan. The proposed Project also falls under the 2014 Broome County NY Rising Community Reconstruction Plan (NYRCR). The proposed Project would not result in the creation of new jobs and/or an increase in the number of employees and would therefore not have an urbanizing effect.

Soil Suitability, Slope, Erosion, Drainage, and Storm Water Runoff – The proposed site is previously disturbed and is occupied by residential land, utilities, roads, and road rights-of-way. The system will be constructed under an existing road. The area in the general vicinity is primarily residential, with mixed farming and forested areas. The Susquehanna River is located within 200 feet of Stillwater Road. The new drainage system will discharge into the river. According to the United States Department of Agriculture (USDA) – Natural Resources Conservation Service (NRCS) Web Soil Survey, the proposed Project site is flat to moderately sloped with 0 to 5% slopes. The proposed activities will not change the slope of the existing site. A New York State Department of Environmental Conservation (NYSDEC) 401 Water Quality Certification and US Army Corps of Engineers Section 404 Clean Water Action, Nationwide permit will cover the drainage system. In addition, best management practices (BMPs), such as silt fence and erosion prevention, would be implemented to eliminate erosion impacts for program locations that require excavation or soil modification, so impacts from erosion are not anticipated as a result of this Project. Although in-ground disturbance will occur for the new drainage system, any soil impacts during construction would be considered negligible.

Hazards and Nuisances, including Site Safety and Noise – The proposed Project will not adversely affect air quality. The proposed Project is not located in a designated non-attainment area for air quality and the proposed activities will not affect transportation patterns or levels of service thereby aiding the preservation of local air quality. Standard BMPs will be implemented during construction to control dust and other emissions. No significant impacts on air quality will result due to the proposed Project.

No hazardous or solid waste storage is evident on the site, and the Project would not expose new populations to hazardous or nuisances because no new populations would reside on the Project site.

Some noise may be generated during construction; however, this will be temporary and will not adversely impact the surrounding areas. The proposed activities will not significantly increase the level of noise or vibration compared to current conditions. In addition, no blasting will be required.

Energy Consumption – The proposed Project will not cause an increase in the use of energy because no changes in land use, population, or energy infrastructure would occur. No impacts would occur to existing nearby suppliers.

Socioeconomic Impacts and Community Facilities and Services – The proposed Project would create temporary construction jobs. However, these jobs would not significantly increase employment opportunities or impact income patterns. The proposed Project would not result in the creation of new permanent jobs and/or result in an increase in the number of employees in the Town of Conklin and therefore would not impact employment and income patterns or alter the demographic characteristics of the surrounding community.

In addition, the Project would not increase the demand for educational, health care or social service facilities, nor would it directly or indirectly displace people, businesses, institutions, or community facilities as it would occur within existing developed land in the Town of Conklin.

The Project site does not contain a structure that is listed on either the State or National Register of Historic Places (NRHP). Consultation with the SHPO confirmed that the proposed Project would have no impact on archaeological and/or historic resources. In addition, representatives of the Delaware Nation, Delaware Tribe of Indians, Onondaga Nation, Seneca-Cayuga Nation, Tuscarora Nation, Oneida Indian Nation, Tuscarora Nation of New York, and Stockbridge-Munsee Community, Band of Mohicans were sent a letter with the site description, photographs, site plan, and map. An April 25, 2016 response letter from the Stockbridge-Munsee Mohican Tribal Historic Preservation states that they do not have outstanding cultural resource concerns due to information provided that the work will occur in the existing project footprint. A May 13, 2016 response letter from the Oneida Indian Nation states that, "there will be no historic properties affected" by the project. The Delaware Tribe of Indians responded on May 24, 2016 and requested that in the event that a concentration of artifacts and/or in the unlikely event any human remains are accidentally unearthed during the course of the project that all work is halted until the Delaware Tribe of Indians is informed of the inadvertent discovery and a qualified archaeologist can evaluate the find.

The amount of solid waste generated from the construction would not significantly increase short-term generation of municipal solid waste. All Project-generated solid waste materials must be managed and transported in accordance with the state's solid and hazardous waste rules.

No expansion of the sanitary sewer system would be required. The Project would not place a demand on a public sewer system.

No changes to the public/public water systems are anticipated as the proposed Project will not create a new demand for water.

The proposed Project would not result in the creation of new jobs and/or result in an increase in the number of employees in the Town of Conklin and therefore would not increase demand for police protection, fire protection, or emergency medical services. The purpose of the proposed improvements is to mitigate future flooding failures and associated property loss by providing secure and reliable drainage infrastructure. The proposed Project will ensure a safe and healthy environment for the local residents, businesses, and visitors.

The proposed Project would not impact open space or recreation.

The proposed Project would not impact transportation. There would be a negligible increase in construction traffic.

Natural Features – The Project site is not located within a state listed Critical Environmental Area (CEA).

The project site is not located within a designated wetland area. The outfall from the drainage system will be in the Susquehanna River. Project activities will be completed in accordance with all applicable federal, state, and local laws, regulations, and permit requirements and conditions. Prior to construction activities, a New York State Department of Environmental Conservation Water Quality permit will be obtained as well as an Army Corps of Engineers nationwide permit.

The proposed project is in the Clinton Street Ballpark Aquifer System. The EPA has been consulted and responded that the project satisfies the requirements of Section 1424 (e) of the Safe Drinking Water Act.

Based on Flood Insurance Map 3600420015C, a portion of the project site is located within an area of 100-year shallow flooding. The proposed project would not adversely affect the floodplain.

The USFWS IPaC Trust Resource Report for the project site lists *Myotis septentrionalis* (Northern Long-eared Bat) as a threatened species. According to the USFWS IPaC Report, there is no critical habitat within the project area. The proposed project is not expected to have any impact on endangered or threatened species. The NYSDEC and USFWS have been consulted and concurred that the proposed project will have no impact on endangered or threatened species.

The proposed project is not located within any agricultural districts. The soils to be disturbed are Chenango and Howard gravelly loams and the majority are covered in asphalt.

The proposed Project is classified as Unlisted action, and GOSR, as the lead agency, prepared a Short Environmental Assessment Form (FEAF) under SEQRA. The proposed Project is funding the drainage improvements that will reduce flooding threats to residences in and around the Stillwater Road neighborhood mitigate associated property loss by providing secure and reliable drainage infrastructure. The improvements will not result in adverse effects to existing air quality, surface or groundwater quality or quantity, noise levels, existing traffic patterns, solid waste production or disposal, or to create erosion or drainage problems.

The proposed Project would include the following measures to avoid or reduce environmental effects:

- Implementation of standard BMP's would control dust and other emissions during construction.

Standard Requirements:
Any change to the proposed Project as described will require re-evaluation by GOSR's Certifying Officer for compliance with State Environmental Quality Review Act (SEQRA) and other law, regulations and policies.

This review does not address all federal, state and local requirements. Acceptance of federal funding requires recipient to comply with all federal, state and local laws. Failure to obtain all appropriate federal, state and local environmental permits and clearances may jeopardize federal funding.

Additional Mitigation Measures:
To the extent practicable, the following mitigation measures recommended by the EPA would be implemented by the Responsible Entity to minimize environmental impacts and create a more sustainable Project:

- Construction and demolition – utilize local and recycled materials in the construction process and to recycle materials generated onsite to the maximum extent possible
- Clean diesel – implement diesel controls, cleaner fuel, and cleaner construction practices for on-road and off-road equipment used for transportation, soil movement, or other construction activities, including:
    - Strategies and technologies that reduce unnecessary idling, including auxiliary power units, the use of electric equipment, and strict enforcement of idling limits; and
    - Use of clean diesel through add-on control technologies like diesel particulate filters and diesel oxidation catalysts, repowers, or newer, cleaner equipment.
- Stormwater – utilize low impact development (LID) principles such as minimizing effective imperviousness to create site drainage, and the planting of native and non-invasive vegetation on the Project site for stormwater management purposes. Other LID practices can include bioretention facilities, rain gardens, vegetated rooftops, rain barrels, and permeable pavements;
- Cost-efficient, environmentally friendly landscaping – EPA's GreenScapes program provides cost-efficient and environmentally friendly solutions for landscaping; and
- Water conservation and efficiency – promote water conservation and efficiency through the use of water efficient products and practices.
    - The use of products with the WaterSense label where appropriate.

In addition to the factors considered above, the GOSR considered the following guidance from the SEQRA and its implementing regulations and determined that the Proposed Action would:

i. Not result in "a substantial adverse change in existing air quality, ground or surface water quality or quantity, traffic or noise levels; a substantial increase in solid waste production; a substantial increase in potential for erosion, flooding, leaching or drainage problems;" (§617.7(c)(1)(i))

ii. Not result in "the removal or destruction of large quantities of vegetation or fauna; substantial interference with the movement of any resident or migratory fish or wildlife species; impacts on a significant habitat area; or other significant adverse impacts to natural resources;"(§617.7(c)(1)(iii))

iii. Not result in "the creation of a material conflict with a community's current plans or goals as officially approved or adopted;" (§617.7(c)(1)(iv))

iv. Not result in "the creation of a hazard to human health;" (§617.7(c)(1)(vii))

v. Not result in "a substantial change in the use, or intensity of use, of land including agricultural, open space or recreational resources, or in its capacity to support existing uses;" (§617.7(c)(1)(viii))

vi. Not result in "the encouraging or attracting of a large number of people to a place or places for more than a few days, compared to the number of people who would come to such place absent the action;" (§617.7(c)(1)(ix))

vii. Not result in "the creation of a material demand for other actions that would result in one of the above consequences;" (§617.7(c)(1)(x))

viii. Not result in "changes in two or more elements of the environment, no one of which has a significant impact on the environment, but when considered together result in a substantial adverse impact on the environment; or (§617.7(c)(1)(xi))

Therefore, GOSR, acting as Lead Agency, and having prepared a Shore Environmental Assessment Form, has determined that the proposed action will not have a significant effect on the environment and a Draft Environmental Impact Statement will not need to be prepared.

Lori A. Shirley
Date: September 8, 2017
Director, Bureau of Environmental Review and Assessment
Governor's Office of Storm Recovery
New York State Homes & Community Renewal
38-40 State Street, Albany, NY 12207
Office: (518) 474-0755

Attachments:

Short Environmental Assessment Form
Site Location Figure
Site Plan
Negative Declaration Distribution List

A copy of this Notice is available at the following web address:

http://www.stormrecovery.ny.gov/environmental-docs

Short Environmental Assessment Form
Part 1 - Project Information

Instructions for Completing

Part 1 - Project Information. The applicant or project sponsor is responsible for the completion of Part 1. Responses become part of the application for approval or funding, are subject to public review, and may be subject to further verification. Complete Part 1 based on information currently available. If additional research or investigation would be needed to fully respond to any item, please answer as thoroughly as possible based on current information.

Complete all items in Part 1. You may also provide any additional information which you believe will be needed by or useful to the lead agency; attach additional pages as necessary to supplement any item.

Part 1 - Project and Sponsor Information

Town of Conklin

Name of Action or Project:

Stillwater Road Stormwater Improvements Project

Project Location (describe, and attach a location map):

Stillwater Road, Town of Conklin, Broome County, NY

Brief Description of Proposed Action:

The project involves the installation of a new storm water drainage system along approximately 650 linear feet of Stillwater Road and approximately 160 feet through a vacant privately owned parcel that discharges into the Susquehanna River, to mitigate flooding in the area. There will be a permanent drainage easement through the private property. In addition, the proposed drainage system will pass beneath the Delaware and Hudson Railroad. The Town of Conklin anticipates the installation of a 36" corrugated pipe beneath Stillwater Road and the privately owned property at a maximum depth of eight feet that outfalls through a flap gate into the Susquehanna River. The portion of pipe that is located beneath the Delaware and Hudson Railroad will be encased with a 48" steel casing. In addition, approximately four manholes will be installed along Stillwater Road. Approximately 50 square feet of heavy stone will be placed around the outfall location on the Susquehanna River bank. Please see attached Drainage Plan.

Name of Applicant or Sponsor:	Telephone: (607) 775-4114
James Finch	E-Mail: supervisor@townofconklin.org

Address:

1271 Conklin Road

City/PO:	State:	Zip Code:
Conklin	NY	13748

	NO	YES
1. Does the proposed action only involve the legislative adoption of a plan, local law, ordinance, administrative rule, or regulation? If Yes, attach a narrative description of the intent of the proposed action and the environmental resources that may be affected in the municipality and proceed to Part 2. If no, continue to question 2.	☑	☐
2. Does the proposed action require a permit, approval or funding from any other governmental Agency? If Yes, list agency(s) name and permit or approval: US ACOE Section 404 Clean Water Act, Nationwide Permit; NYSDEC 401 Water Quality Certification	☐	☑

3.a. Total acreage of the site of the proposed action? .02 acres

b. Total acreage to be physically disturbed? .02 acres

c. Total acreage (project site and any contiguous properties) owned or controlled by the applicant or project sponsor? .5 acres

4. Check all land uses that occur on, adjoining and near the proposed action.

☐ Urban ☑ Rural (non-agriculture) ☑ Industrial ☑ Commercial ☑ Residential (suburban)

☐ Forest ☐ Agriculture ☑ Aquatic ☐ Other (specify): _____

☐ Parkland

	NO	YES	N/A
5. Is the proposed action,			
a. A permitted use under the zoning regulations?	☐	☑	☐
b. Consistent with the adopted comprehensive plan?	☐	☑	☐
6. Is the proposed action consistent with the predominant character of the existing built or natural landscape?	NO ☐	YES ☑	
7. Is the site of the proposed action located in, or does it adjoin, a state listed Critical Environmental Area? If Yes, identify: _____	NO ☑	YES ☐	
8. a. Will the proposed action result in a substantial increase in traffic above present levels?	NO ☑	YES ☐	
b. Are public transportation service(s) available at or near the site of the proposed action?	☑	☐	
c. Are any pedestrian accommodations or bicycle routes available on or near site of the proposed action?	☑	☐	
9. Does the proposed action meet or exceed the state energy code requirements? If the proposed action will exceed requirements, describe design features and technologies: _____	NO ☐	YES ☑	
10. Will the proposed action connect to an existing public/private water supply? If No, describe method for providing potable water: Not Applicable	NO ☑	YES ☐	
11. Will the proposed action connect to existing wastewater utilities? If No, describe method for providing wastewater treatment: Not Applicable	NO ☑	YES ☐	
12. a. Does the site contain a structure that is listed on either the State or National Register of Historic Places?	NO ☑	YES ☐	
b. Is the proposed action located in an archeological sensitive area?	☐	☑	
13. a. Does any portion of the site of the proposed action, or lands adjoining the proposed action, contain wetlands or other waterbodies regulated by a federal, state or local agency?	NO ☐	YES ☑	
b. Would the proposed action physically alter, or encroach into, any existing wetland or waterbody? If Yes, identify the wetland or waterbody and extent of alterations in square feet or acres: Approximately 50 square feet of heavy stone will be placed around the outfall location on the Susquehanna River bank.	☐	☑	
14. Identify the typical habitat types that occur on, or are likely to be found on the project site. Check all that apply: ☑ Shoreline ☐ Forest ☐ Agricultural/grasslands ☐ Early mid-successional ☑ Wetland ☐ Urban ☑ Suburban			
15. Does the site of the proposed action contain any species of animal, or associated habitats, listed by the State or Federal government as threatened or endangered?	NO ☑	YES ☐	
16. Is the project site located in the 100 year flood plain?	NO ☐	YES ☑	
17. Will the proposed action create storm water discharge, either from point or non-point sources? If Yes, a. Will storm water discharges flow to adjacent properties? ☐ NO ☑ YES	NO ☐	YES ☑	
b. Will storm water discharges be directed to established conveyance systems (runoff and storm drains)? If Yes, briefly describe: ☐ NO ☑ YES The project involves the installation of a new stormwater drainage system that discharges directly into the Susquehanna River.			

	NO	YES
18. Does the proposed action include construction or other activities that result in the impoundment of water or other liquids (e.g. retention pond, waste lagoon, dam)? If Yes, explain purpose and size:	✓	
19. Has the site of the proposed action or an adjoining property been the location of an active or closed solid waste management facility? If Yes, describe:	✓	
20. Has the site of the proposed action or an adjoining property been the subject of remediation (ongoing or completed) for hazardous waste? If Yes, describe:	✓	

I AFFIRM THAT THE INFORMATION PROVIDED ABOVE IS TRUE AND ACCURATE TO THE BEST OF MY KNOWLEDGE

Applicant/sponsor name: James Finch, Supervisor Date: 6-9-16

Signature:

PRINT FORM

EAF Mapper Summary Report

Thursday, May 26, 2016 4:47 PM

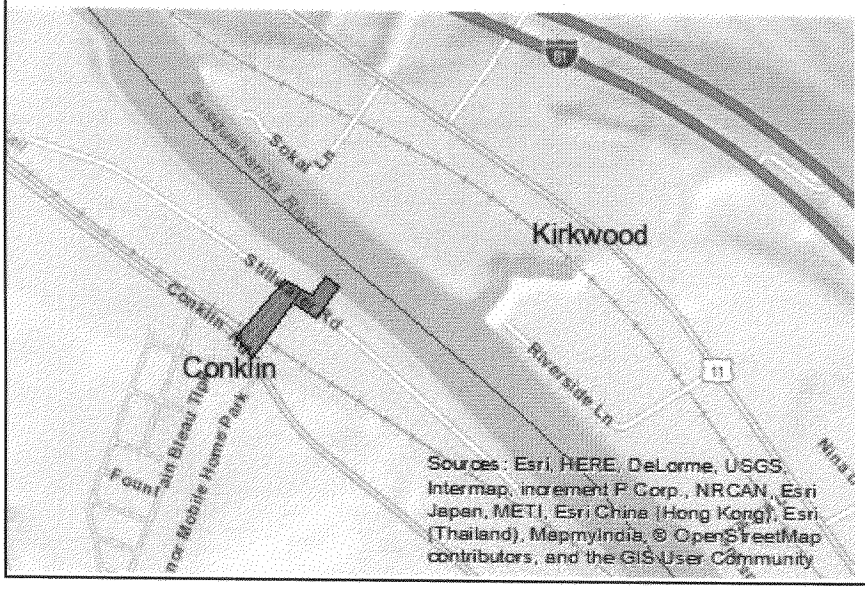

Disclaimer: The EAF Mapper is a screening tool intended to assist project sponsors and reviewing agencies in preparing an environmental assessment form (EAF). Not all questions asked in the EAF are answered by the EAF Mapper. Additional information on any EAF question can be obtained by consulting the EAF Workbooks. Although the EAF Mapper provides the most up-to-date digital data available to DEC, you may also need to contact local or other data sources in order to obtain data not provided by the Mapper. Digital data is not a substitute for agency determinations.

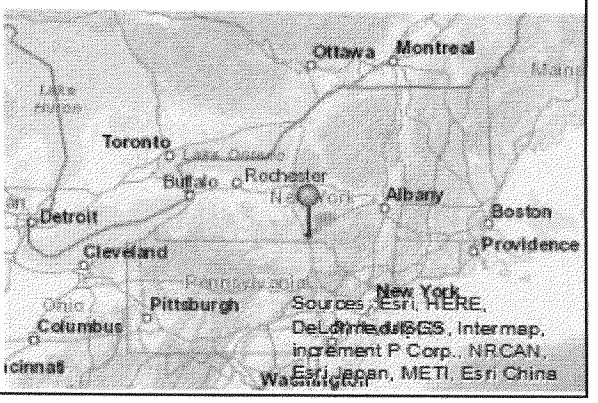

Part 1 / Question 7 [Critical Environmental Area]	No
Part 1 / Question 12a [National Register of Historic Places]	No
Part 1 / Question 12b [Archeological Sites]	Yes
Part 1 / Question 13a [Wetlands or Other Regulated Waterbodies]	Yes - Digital mapping information on local and federal wetlands and waterbodies is known to be incomplete. Refer to EAF Workbook.
Part 1 / Question 15 [Threatened or Endangered Animal]	No
Part 1 / Question 16 [100 Year Flood Plain]	Digital mapping data are not available or are incomplete. Refer to EAF Workbook.
Part 1 / Question 20 [Remediation Site]	No

Agency Use Only [If applicable]

Project:

Date:

Short Environmental Assessment Form
Part 2 - Impact Assessment

Part 2 is to be completed by the Lead Agency.
Answer all of the following questions in Part 2 using the information contained in Part 1 and other materials submitted by the project sponsor or otherwise available to the reviewer. When answering the questions the reviewer should be guided by the concept "Have my responses been reasonable considering the scale and context of the proposed action?"

	No, or small impact may occur	Moderate to large impact may occur
1. Will the proposed action create a material conflict with an adopted land use plan or zoning regulations?	✓	
2. Will the proposed action result in a change in the use or intensity of use of land?	✓	
3. Will the proposed action impair the character or quality of the existing community?	✓	
4. Will the proposed action have an impact on the environmental characteristics that caused the establishment of a Critical Environmental Area (CEA)?	✓	
5. Will the proposed action result in an adverse change in the existing level of traffic or affect existing infrastructure for mass transit, biking or walkway?	✓	
6. Will the proposed action cause an increase in the use of energy and it fails to incorporate reasonably available energy conservation or renewable energy opportunities?	✓	
7. Will the proposed action impact existing: a. public / private water supplies?	✓	
b. public / private wastewater treatment utilities?	✓	
8. Will the proposed action impair the character or quality of important historic, archaeological, architectural or aesthetic resources?	✓	
9. Will the proposed action result in an adverse change to natural resources (e.g., wetlands, waterbodies, groundwater, air quality, flora and fauna)?	✓	
10. Will the proposed action result in an increase in the potential for erosion, flooding or drainage problems?	✓	
11. Will the proposed action create a hazard to environmental resources or human health?	✓	

PRINT FORM

Agency Use Only [If applicable]

Project:

Date:

Short Environmental Assessment Form
Part 3 Determination of Significance

For every question in Part 2 that was answered "moderate to large impact may occur", or if there is a need to explain why a particular element of the proposed action may or will not result in a significant adverse environmental impact, please complete Part 3. Part 3 should, in sufficient detail, identify the impact, including any measures or design elements that have been included by the project sponsor to avoid or reduce impacts. Part 3 should also explain how the lead agency determined that the impact may or will not be significant. Each potential impact should be assessed considering its setting, probability of occurring, duration, irreversibility, geographic scope and magnitude. Also consider the potential for short-term, long-term and cumulative impacts.

☐ Check this box if you have determined, based on the information and analysis above, and any supporting documentation, that the proposed action may result in one or more potentially large or significant adverse impacts and an environmental impact statement is required.

☑ Check this box if you have determined, based on the information and analysis above, and any supporting documentation, that the proposed action will not result in any significant adverse environmental impacts.

Governor's Office of Storm Recovery	September 8, 2017
Name of Lead Agency	Date
Lori A. Shirley	Director, BERA, GOSR
Print or Type Name of Responsible Officer in Lead Agency	Title of Responsible Officer
Lori A Shirley	
Signature of Responsible Officer in Lead Agency	Signature of Preparer (if different from Responsible Officer)

PRINT FORM

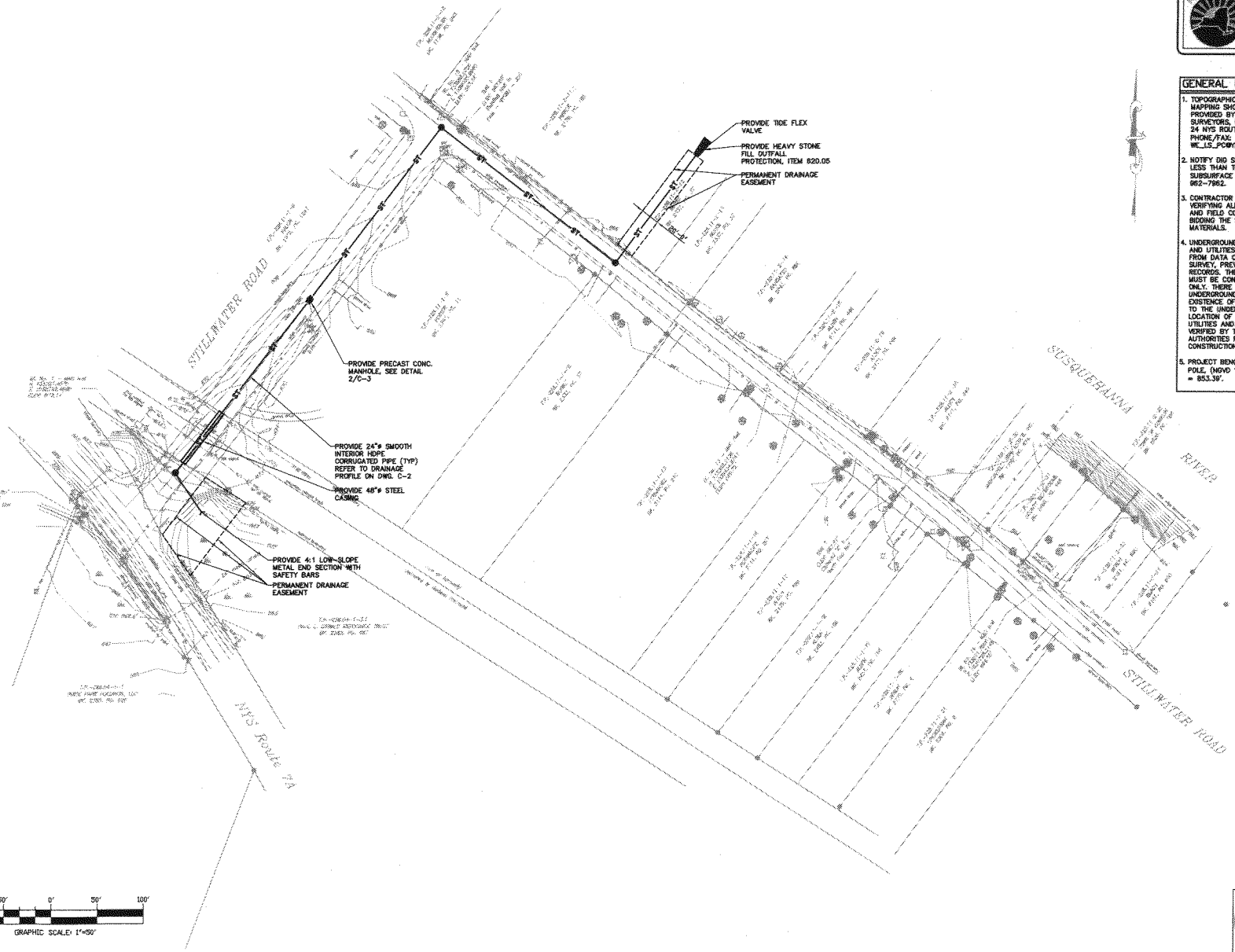

GENERAL NOTES:

1. TOPOGRAPHIC AND PLANIMETRIC MAPPING SHOWN ON THIS SITE PLAN PROVIDED BY WILLIAMS & EDSALL LAND SURVEYORS, P.C., THE TURNER HOUSE, 24 NYS ROUTE 96, OWEGO, NY 13827. PHONE/FAX: (607) 687-5953, E-MAIL: WE_LS_PC@YAHOO.COM.
2. NOTIFY DIG SAFELY NEW YORK NOT LESS THAN THREE DAYS PRIOR TO ANY SUBSURFACE CONSTRUCTION, AT (800) 962-7962.
3. CONTRACTOR IS RESPONSIBLE FOR VERIFYING ALL DIMENSIONS, QUANTITIES, AND FIELD CONDITIONS PRIOR TO BIDDING THE WORK OR ORDERING MATERIALS.
4. UNDERGROUND FACILITIES, STRUCTURES AND UTILITES HAVE BEEN PLOTTED FROM DATA OBTAINED BY FIELD SURVEY, PREVIOUS MAPS AND RECORDS. THEREFORE THEIR LOCATIONS MUST BE CONSIDERED APPROXIMATE ONLY. THERE MAY BE OTHER UNDERGROUND UTILITIES, THE EXISTENCE OF WHICH ARE NOT KNOWN TO THE UNDERSIGNED. SIZE AND LOCATION OF ALL UNDERGROUND UTILITIES AND STRUCTURES MUST BE VERIFIED BY THE APPROPRIATE AUTHORITIES PRIOR TO ANY CONSTRUCTION.
5. PROJECT BENCHMARK: 8" SPIKE SET IN POLE, (NGVD 1929 DATUM), ELEVATION = 853.39'.

GRIFFITHS ENGINEERING
13 South Washington Street, Suite 1
Binghamton, New York 13903
Telephone (607) 724-9400
Fax (607) 724-2454

PRELIMINARY NOT FOR CONSTRUCTION

Seal

Designed by JPM	Date 08-28-2012	Rev.#	
Drawn by JPM	Cad by JC	Project No. 2005-54-135	
		Plot Scale AS NOTED	

Drawing Name: DRAINAGE PLAN

Project Location: STILLWATER ROAD, TOWN OF CONKLIN, BROOME COUNTY, NEW YORK

Project Name: GOVERNOR'S OFFICE OF STORM RECOVERY STILLWATER ROAD STORMWATER IMPROVEMENTS

Drawing Reference Number: C-1

Dig Safely. Call 811 before you dig

J:\14-128-1256 CDBG-DR Projects\Projects\Stillwater Road\Stillwater Site Plan.ai

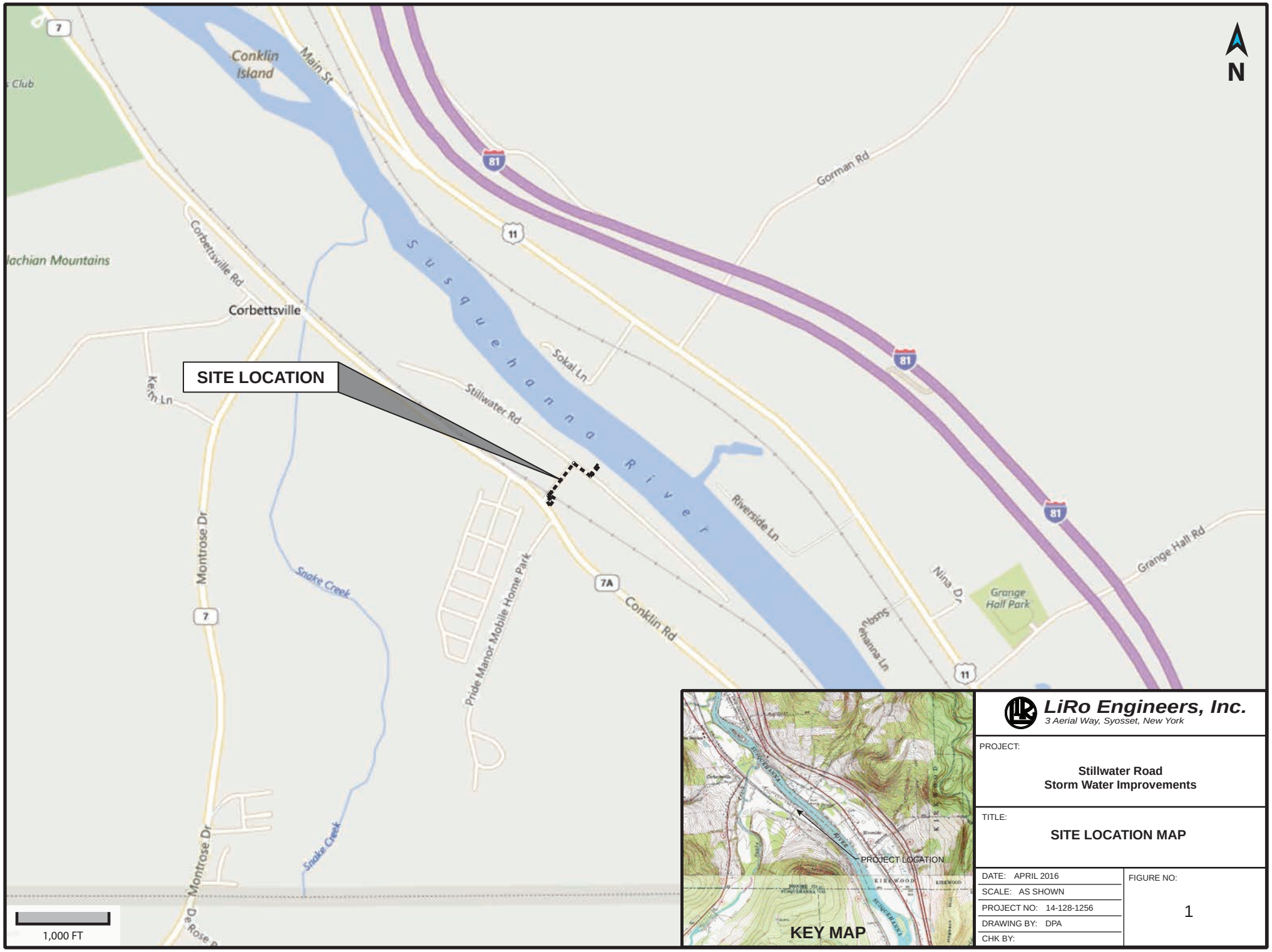

LiRo Engineers, Inc.
3 Aerial Way, Syosset, New York

PROJECT:

Stillwater Road
Storm Water Improvements

TITLE:

SITE LOCATION MAP

DATE: APRIL 2016	FIGURE NO:
SCALE: AS SHOWN	1
PROJECT NO: 14-128-1256	
DRAWING BY: DPA	
CHK BY:	

J:\14-128-1256 CDBG-DR Projects\Projects\Stillwater Road/Stillwater Aerial.ai

LiRo Engineers, Inc.
3 Aerial Way, Syosset, New York

PROJECT:

Stillwater Road
Storm Water Improvements

TITLE:

SITE LOCATION AERIAL

DATE: APRIL 2016	FIGURE NO:
SCALE: AS SHOWN	2
PROJECT NO: 14-128-1256	
DRAWING BY: DPA	
CHK BY:	

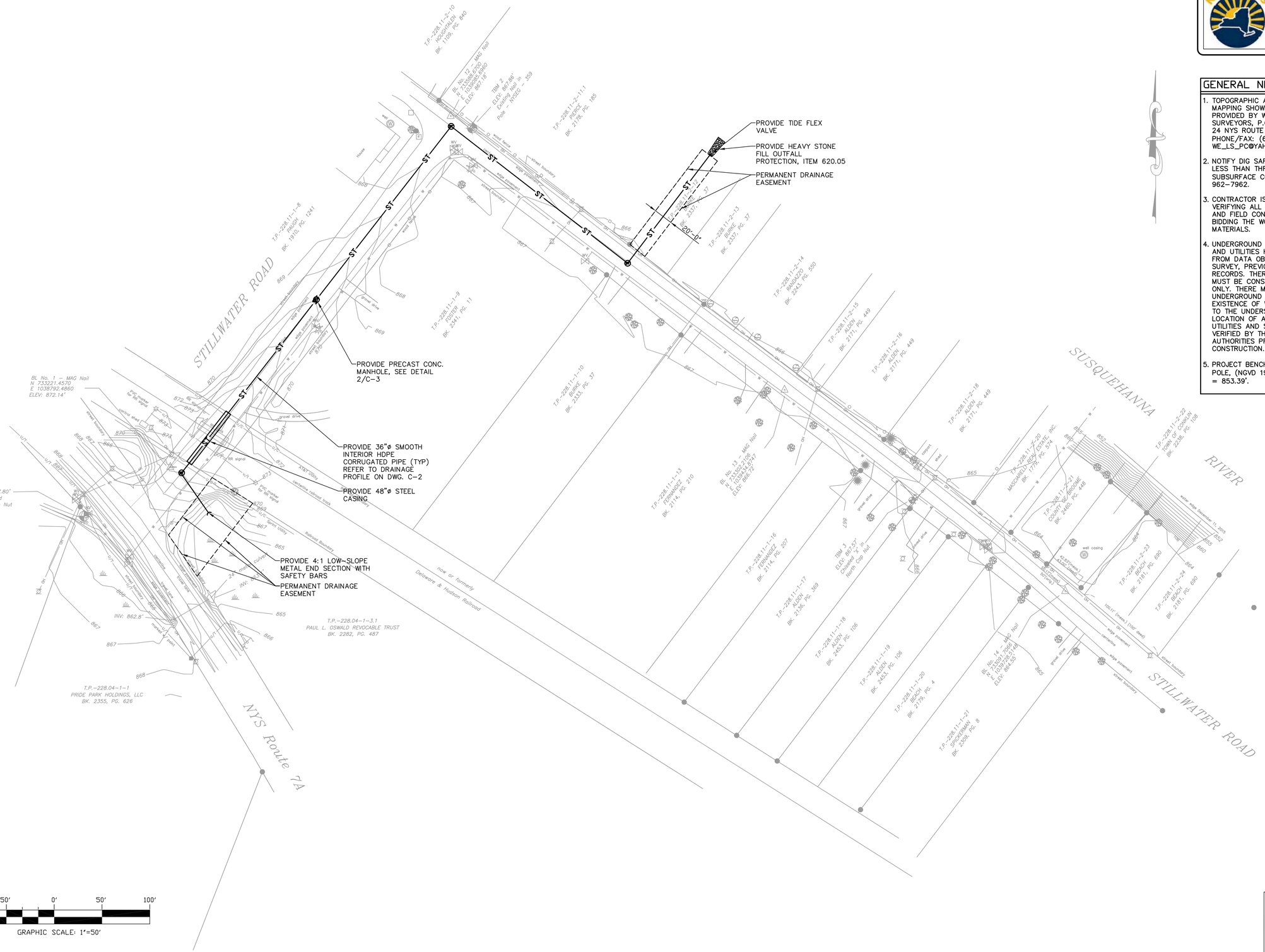

GENERAL NOTES:

1. TOPOGRAPHIC AND PLANIMETRIC MAPPING SHOWN ON THIS SITE PLAN PROVIDED BY WILLIAMS & EDSALL LAND SURVEYORS, P.C., THE TURNER HOUSE, 24 NYS ROUTE 96, OWEGO, NY 13827, PHONE/FAX: (607) 687-8953, E-MAIL: WE_LS_PC@YAHOO.COM.
2. NOTIFY DIG SAFELY NEW YORK NOT LESS THAN THREE DAYS PRIOR TO ANY SUBSURFACE CONSTRUCTION, AT (800) 962-7962.
3. CONTRACTOR IS RESPONSIBLE FOR VERIFYING ALL DIMENSIONS, QUANTITIES, AND FIELD CONDITIONS PRIOR TO BIDDING THE WORK OR ORDERING MATERIALS.
4. UNDERGROUND FACILITIES, STRUCTURES AND UTILITIES HAVE BEEN PLOTTED FROM DATA OBTAINED BY FIELD SURVEY, PREVIOUS MAPS AND RECORDS. THEREFORE THEIR LOCATIONS MUST BE CONSIDERED APPROXIMATE ONLY. THERE MAY BE OTHER UNDERGROUND UTILITIES, THE EXISTENCE OF WHICH ARE NOT KNOWN TO THE UNDERSIGNED. SIZE AND LOCATION OF ALL UNDERGROUND UTILITIES AND STRUCTURES MUST BE VERIFIED BY THE APPROPRIATE AUTHORITIES PRIOR TO ANY CONSTRUCTION.
5. PROJECT BENCHMARK: 8" SPIKE SET IN POLE, (NGVD 1929 DATUM), ELEVATION = 853.39'.

GRIFFITHS ENGINEERING
13 South Washington Street, Suite 1
Binghamton, New York 13903
Telephone (607) 724-2400
Fax (607) 724-2456

PRELIMINARY NOT FOR CONSTRUCTION

Seal

Designed by: JPM	Date: 09-29-2015	Rev.#
Drawn by: JPM	Ckd by: DG	Project No.: 2005-64-135
		Plot Scale: AS NOTED

UNAUTHORIZED ALTERATION OF THIS DRAWING IS A VIOLATION OF THE NEW YORK STATE EDUCATION LAW, SECTION 7209, SUBDIVISION 2.

Drawing Name:

DRAINAGE PLAN

Project Location:
STILLWATER ROAD
TOWN OF CONKLIN
BROOME COUNTY, NEW YORK

Project Name:
GOVERNOR'S OFFICE OF STORM RECOVERY
STILLWATER ROAD
STORMWATER IMPROVEMENTS

Drawing Reference Number:
C-1

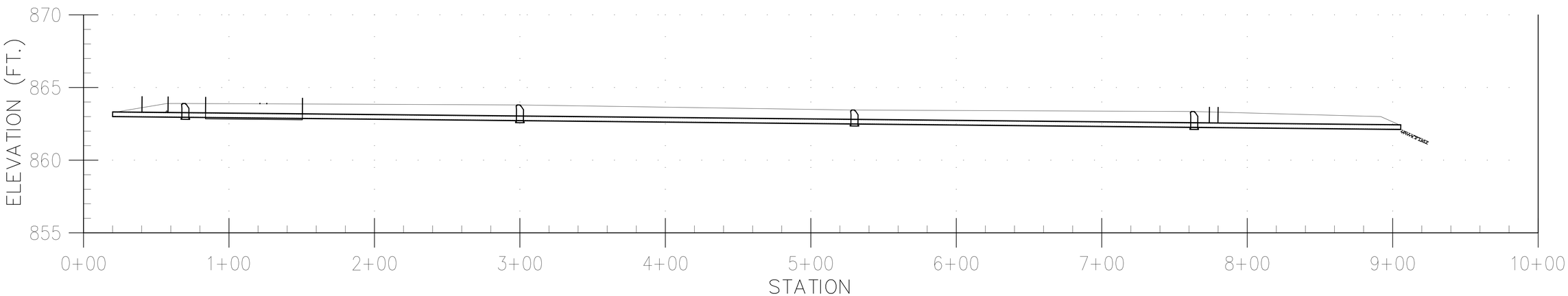

GRIFFITHS ENGINEERING
13 South Washington Street, Suite 1
Binghamton, New York 13903
Telephone (607) 724-2400
Fax (607) 724-2456

Seal

Date: 09-29-2015
Rev.#
Project No.: 2005-64-135
Designed by: JPM
Drawn by: JPM
Ckd by: DG
Plot Scale: AS NOTED

UNAUTHORIZED ALTERATION OF THIS DRAWING IS A VIOLATION OF THE NEW YORK STATE EDUCATION LAW, SECTION 7209, SUBDIVISION 2.

Drawing Name:
DRAINAGE PROFILE

Project Location:
STILLWATER ROAD
TOWN OF CONKLIN
BROOME COUNTY, NEW YORK

Project Name:
GOVERNOR'S OFFICE OF STORM RECOVERY
STILLWATER ROAD
STORMWATER IMPROVEMENTS

Drawing Reference Number:
C-2

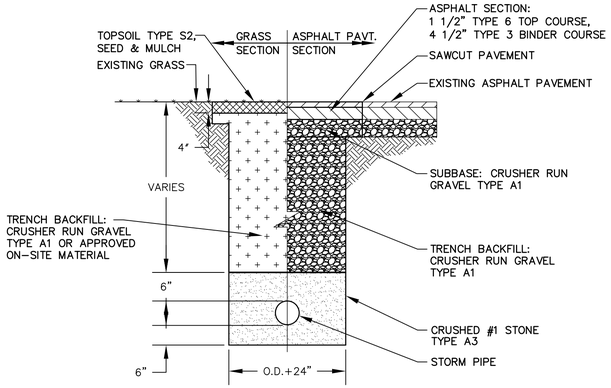

1 / C-3 TRENCH EXCAVATION & BACKFILL DETAIL
NOT TO SCALE

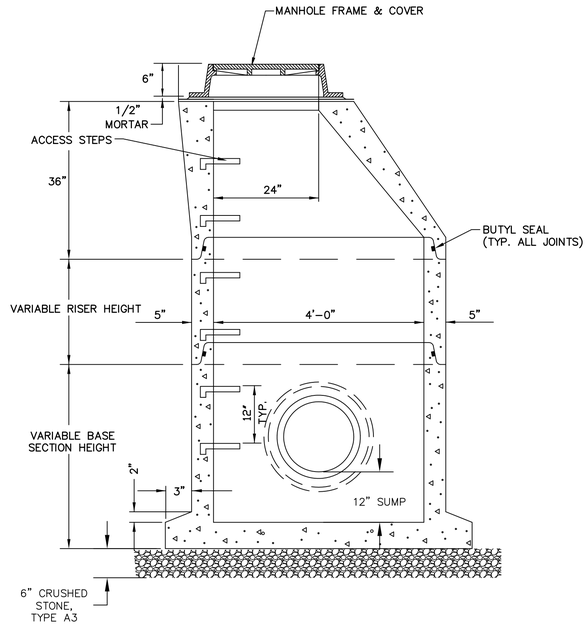

2 / C-3 PRECAST CONCRETE MANHOLE
NOT TO SCALE

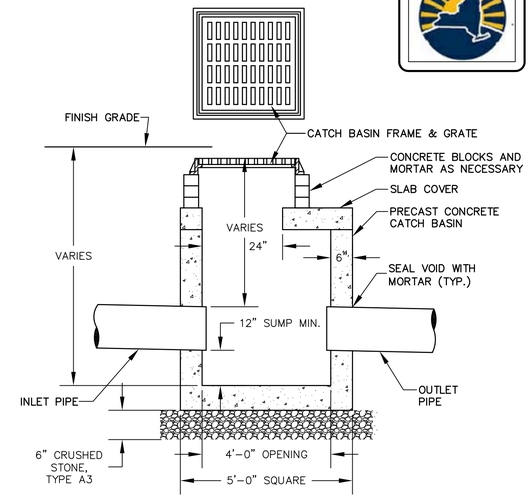

3 / C-3 CATCH BASIN DETAIL
NOT TO SCALE

GRIFFITHS ENGINEERING
13 South Washington Street, Suite 1
Binghamton, New York 13903
Telephone (607) 724-2400
Fax (607) 724-2456

Seal

Designed by: JPM
Drawn by: JPM
Ckd by: DG
Date: 09-29-2015
Rev. #
Project No.: 2005-64-135
Plot Scale: AS NOTED

UNAUTHORIZED ALTERATION OF THIS DRAWING IS A VIOLATION OF THE NEW YORK STATE EDUCATION LAW, SECTION 7209, SUBDIVISION 2.

Drawing Name: DETAILS

Project Location: STILLWATER ROAD
TOWN OF CONKLIN
BROOME COUNTY, NEW YORK

Project Name: **GOVERNOR'S OFFICE OF STORM RECOVERY STILLWATER ROAD STORMWATER IMPROVEMENTS**

Drawing Reference Number: C-3

Involved/Interested Agencies – Stillwater Road Stormwater Improvements Project

Involved

Mr. David Bimber, Regional Permit Administrator, Region 7
New York State Department of Environmental Conservation
615 Erie Blvd. West
Syracuse, NY 13204

Mr. Jack Williams, P.E., Regional Director
New York State Department of Transportation Region 9
44 Hawley Street
Binghamton, NY 13901

Mr. Ron Rausch, Director
Environmental Management Bureau
Office of Parks, Recreation and Historic Preservation
625 Broadway, 2nd Floor
Albany, New York 12238

Mr. Larry Moss, Technical Specialist
Division for Historic Preservation
New York State Historic Preservation Office
Peebles Island Resource Center
P.O. Box 189
Waterford, NY 12188-0189

Mr. Richard Lord
Chief of Mitigation Programs & Agency Preservation Officer
NYS Division of Homeland Security & Emergency Services
1220 Washington Avenue
Bldg 7A, Floor 4
Albany NY 12242

Mr. Brian Coddington, Highway Superintendent
Town of Conklin
1271 Conklin Road
Conklin, New York 13748

Mr. William Dumian, Jr., Town Supervisor
Town of Conklin
1271 Conklin Road
Conklin, New York 13748

Mr. Tom DeLamarter, Public Works Superintendent
Town of Conklin
1271 Conklin Road
Conklin, New York 13748

Mr. Nick Vascello, Code Enforcement
Town of Conklin
1271 Conklin Road
Conklin, New York 13748

Ms. Rebecca Kaufman, MS., Director
Broome County Health Department
Environmental Health
225 Front St.
Binghamton, NY 13905

Mr. Frank Evangelisti, Director
Broome County Planning Department
Edwin L Crawford County Office Bldg., 5th Floor
60 Hawley St.
PO Box 1766
Binghamton, NY 13902

Leslie G. Boulton, P.E., Acting Commissioner
Broome County Department of Public Works
Broome County Office Building, Fifth Floor
60 Hawley Street, PO Box 1766
Binghamton, NY 13902

Interested

Ms. Sherrie Jacobs, Town Clerk
Town of Conklin
1271 Conklin Road
Conklin, New York 13748

Richard R. Blythe, County Clerk
Broome County
Edwin L. Crawford County Office Building, 3rd Floor
60 Hawley Street, P.O. Box 2062
Binghamton, NY 13902