ROBERT STREET STORMWATER PUMP STATION UPGRADE – TOWN OF VESTAL

ENVIRONMENTAL ASSESSMENT

New York State Governor's Office of Storm Recovery

December 30, 2016

ROBERT STREET STORMWATER PUMP STATION UPGRADE – TOWN OF VESTAL

Environmental Assessment

December 30, 2016

Project Name:	Robert Street Stormwater Pump Station Upgrade – Town of Vestal
Project Location:	549 Vestal Parkway, Town of Vestal, Broome County, New York
Federal Agency:	U.S. Department of Housing and Urban Development (HUD)
Responsible Entity:	New York State Homes and Community Renewal (NYS HCR)
Responsible Agency's Certifying Officer:	Lori A. Shirley, Certifying Officer
Project Sponsor:	Governor's Office of Storm Recovery (GOSR) 99 Washington Avenue, Suite 1224 Albany, New York 12260
Primary Contact:	Lori A. Shirley Certifying Officer NYS Governor's Office of Storm Recovery *Email:* Lori.Shirley@nyshcr.org *Telephone:* (518) 474-0755
Project NEPA Classification:	24 CFR 58.36 (Environmental Assessment)

Environmental Finding:	☒ Finding of No Significant Impact - The project will not result in a significant impact on the quality of the human environment.
	☐ Finding of Significant Impact - The project may significantly affect the quality of the human environment.
Certification	The undersigned hereby certifies that New York State Homes and Community Renewal has conducted an environmental review of the project identified above and prepared the attached environmental review record in compliance with all applicable provisions of the National Environmental Policy Act of 1969, as amended (42 USC Sec. 4321 et seq.) and its implementing regulations at 24 CFR Part 58.
Signature	Lori A Shirley Lori A. Shirley

Environmental Assessment Prepared By:	Tectonic Engineering & Surveying Consultants, P.C. 70 Pleasant Hill Road Mountainville, NY 10953

CERTIFICATION OF NEPA CLASSIFICATION

It is the finding of the New York State Housing Trust Fund Corporation that the activity proposed in its 2016 NYS CDBG-DR project, Robert Street Stormwater Pump Station Upgrade – Town of Vestal, is:

Check the applicable classification.

- ☐ Exempt as defined in 24 CFR 58.34 (a).
- ☐ Categorically Excluded as defined in 24 CFR 58.35(b).
- ☐ Categorically Excluded as defined in 24 CFR 58.35(a) and no activities are affected by federal environmental statues and executive orders [i.e., exempt under 58.34(a)(12)].
- ☐ Categorically Excluded as defined in 24 CFR 58.35(a) and some activities are affected by federal environmental statues and executive orders.
- ☒ "Other" neither exempt (24 CFR 58.34(a)) nor categorically excluded (24 CFR 58.35).
- ☒ Part or all of the project is located in an area identified as a floodplain or wetland. For projects located in a floodplain or wetland, evidence of compliance with Executive Orders 11988 and/or 11990 is required.

For activities excluding those classified as "Other", attached is the appropriate Classification Checklist (Exhibit 2-4) that identifies each activity and the corresponding citation.

Lori A Shirley

Signature of Certifying Officer	12/30/2016 Date
Lori A. Shirley Print Name	Certifying Environmental Officer Title

CERTIFICATION OF SEQRA CLASSIFICATION

It is the finding of the New York State Housing Trust Fund Corporation that the activity(ies) proposed in its 2016 NYS CDBG-DR project, Robert Street Stormwater Pump Station Upgrade– Town of Vestal, constitute a:

Check the applicable classification:

- ☐ Type I Action (6NYCRR Section 617.4)
- ☐ Type II Action (6NYCRR Section 617.5)
- ☒ Unlisted Action (not Type I or Type II Action)

Check if applicable:

- ☐ Environmental Impact Statement (EIS) Prepared
  - ☐ Draft EIS
  - ☐ Final EIS

Lori A Shirley

Signature of Certifying Officer

12/30/2016
Date

Lori A. Shirley
Print Name

Certifying Environmental Officer
Title

Description of the Proposed Project [24 CFR 50.12 & 58.32; 40 CFR 1508.25]**:**

Project Name: Robert Street Stormwater Pump Station Upgrade – Town of Vestal

Project Location: The parcel location is 549 Vestal Parkway, Town of Vestal, Broome County, New York. This parcel is adjacent to the northwest limit of Robert Street, which is a dead-end street located off of Front Street.

Project Description: The Robert Street Stormwater Pump Station Upgrade – Town of Vestal (Project) involves the conversion of a defunct sanitary pump station to a stormwater pump station in a neighborhood adjacent to 549 Vestal Parkway, Town of Vestal, Broome County, New York in order to reduce flood risk to the surrounding neighborhood. Upon conversion, the pump station will drain a stormwater retention swale directly adjacent to the pump station when stormwater begins to pond within the adjacent neighborhood, thereby preventing or limiting flooding of the homes. Construction will occur within the existing pump station and will include two pipes installed in a westerly direction from the pump station over a levee adjacent to Choconut Creek. Additionally, gravity flow piping will be placed in the drainage swale leading to the pump house in order to feed the ponding water into the pump house. The location of the proposed Project activities is identified on the enclosed aerial map, street map, and United States Geological Survey (USGS) topographic map (**Attachment 1**).

Project Activities: The proposed work comprises the combined use of the converted pump station and its two new outfall pipes in order to drain stormwater into the Choconut Creek. The Project will also involve the construction of a 36-inch diameter gravity flow influent pipe that will run adjacent to NYS Route 434. This pipe will run from a proposed concrete influent structure that will be built near the northwestern limit of Elizabeth Street. Included in this structure will be a sharp-crested rectangular weir gate to control the flow diverted to the pump station. Electrical service is also proposed to be installed underground from a nearby 3-phase utility pole located adjacent to NYS Route 434. The electric service is proposed to run along the area of the concrete influent structure and follow underground within the vicinity of the 36-inch diameter gravity flow influent pipe to the existing Robert Street Pump Station.

The current above-grade pump station structure will be removed and replaced with a pavilion-type structure. Stormwater is proposed to flow over an operator adjustable weir level to enter a concrete influent structure located adjacent to the existing stormwater drainage ditch. Water will travel from the influent weir structure through a 36-inch smooth interior corrugated polyethylene pipe to the pump station. The below-grade pump station infrastructure will be repurposed in-place and will include the installation of two 100-HP submersible pumps with interior station piping and valves. Dual 24-inch effluent force mains will be installed from the existing pump station location and will end with duckbill check valves at the discharge points in the adjacent Choconut Creek. The pipes will be positioned from the southern side of the pump station and will turn west to be approximately perpendicular to the adjacent swale and levee. The effluent force main pipes will be approximately 225 feet in length. Two air release valve manholes will also be constructed along these force main lines. The Project will involve excavation and grading in order to install the washed gravel piping bed and for fill placement over the piping after the piping is installed. Minor excavation will be necessary to install supports in the swale between the levee and the pump station. Piping will be mounted on the supports so that it rests at an above-ground level over the swale location. The piping will be supported so that the section running across the swale is above ground, and the pipe sections installed on washed gravel bedding on the levee. The pipe sections on the levee will be filled over and seeded. The two pipes, which will be installed adjacent to each other, will be approximately 225 feet in length and the diameter of the pipes are proposed to be 24-inches in diameter, but could be up to 36 inches.

The pipe section on the levee will be overlain with topsoil and seeded. Native vegetation will be used to reseed the disturbed area and all topsoil and gravel used will be clean so as not to introduce contaminants into the area. The proposed pipe outfall locations will be placed over the levee and down the side of the Choconut Creek streambank. The outfall locations of the pipes on the bank of Choconut Creek will require the installation of a concrete headwall, and rip rap will be placed below the outfall to prevent erosion. The pipes will be installed in a concrete headwall, with rip rap a minimum of two feet deep and keyed into the existing slope for a minimum of two feet to prevent movement and erosion during high flow events in the Choconut Creek. Additionally, a paved access road will be extended off Robert Street, to the northwestern side of the pump station. This access road will include compacted granular backfill, a geogrid fabric placed on prepared subgrade, 12 inches of a crushed stone subbase per NYSDOT 304.12, and new asphalt cover with a 2-foot shoulder. It is not anticipated that the stream bed embankment will be disturbed during construction as the force main and outfall headwall will be placed above the ordinary high water mark. The pipes will be installed using concrete thrust restraints to anchor the piping (see Engineer Response to EPA dated 10/21/2016 in **Attachment 2**).

Statement of Purpose and Need for the Proposal [40 CFR 1508.9(b)]:
The funding assistance will provide for the conversion of a sanitary pump station into a stormwater pump station that will protect a neighborhood susceptible to flooding from ponding water resulting from storm events. Moreover, this Project will reduce flooding risk to residents and properties situated within the adjacent neighborhood and enhance a Town-owned flood control asset.

Existing Conditions and Trends [24 CFR 58.40(a)]:
The Robert Street Neighborhood has been subject to flooding in the past. The Choconut levee protects the Robert Street Neighborhood when the Choconut Creek is in flood stage, but it also prevents the discharge of localized stormwater runoff from the neighborhood. There is a stormwater detention pond located north of NYS Route 434 to which the Robert Street Neighborhood drains. However, during flood stages of the Choconut Creek the retention area cannot drain to the creek and a backwater condition is created which in effect creates ponding in the Robert Street Neighborhood.

According to the DMA 2000 Hazard Mitigation Plan Update – Broome County, NY, the Town of Vestal has a frequent probability of occurrence for floods and severe storms (page 9.22 - 4). This Plan highlights past actions that have been taken in the Town to mitigate damages from natural disasters. These included buyout of properties, elevation of structures, and floodproofing of structures. Still, flooding is identified as a hazard vulnerability for the Town. The proposed Project, described herein, is specifically identified as a mitigation initiative that has a high estimated benefit to the community.

A combination of open and closed gravity drainage systems convey stormwater runoff from approximately 117 acres of land in the Town of Vestal to an existing NYSDEC stormwater retention pond that is connected to Choconut Creek via an existing culvert. This outlet culvert is valve controlled and can be closed when the Choconut Creek water levels rise above that of the retention pond. When the NYSDEC retention pond outlet is closed, tributary water flow will back up in the pond. This backed up water will feed the proposed Robert Street Stormwater Pump Station. During low-flow conditions, the stormwater will bypass the pump station. During high-flow conditions, the pump station will receive flow waters.

Historically, the currently out of service pump station was used during storm events to pump sanitary waste into Choconut Creek when the Town sewage treatment plant was overwhelmed. Sanitary system upgrades and the direction of sanitary waste to the Village of Endicott treatment facilities (approximately during the late 1960s) has rendered the current pump station defunct as a sanitary sewer system pipe. This has produced an opportunity for the Town to convert the existing pump station facility into a stormwater

pump station that will protect residences and businesses from ponding stormwater and will increase the resilience of the Town of Vestal during future high water, storm, and flooding events.

According to the New York Rising Community Reconstruction (NYRCR) Broome Plan, this Project will increase protection for approximately twenty (20) residential properties and several businesses, and it will create resiliency during future flooding events for the Town of Vestal.

Funding Information

Estimated Total HUD Funded Amount:

CDBG-DR	$1,200,000.00

Estimated Total Project Cost (HUD and non-HUD funds) [24 CFR 58.32(d)]**:**

CDBG-DR	$1,200,000.00
Total	**$1,200,000.00**

Compliance with 24 CFR 58.5, and 58.6 Laws and Authorities

Record below the compliance or conformance determinations for each statute, executive order, or regulation. Provide credible, traceable, and supportive source documentation for each authority. Where applicable, complete the necessary reviews or consultations and obtain or note applicable permits of approvals. Clearly note citations, dates/names/titles of contacts, and page references. Attach additional documentation as appropriate.

Compliance Factors: Statutes, Executive Orders, and Regulations listed at 24 CFR §58.5 and §58.6	Are formal compliance steps or mitigation required?	Compliance determinations
STATUTES, EXECUTIVE ORDERS, AND REGULATIONS LISTED AT 24 CFR 50.4 and 58.6		
Airport Hazards 24 CFR Part 51 Subpart D	Yes No ☐ ☒	Based on guidance provided by HUD in Fact Sheet #D1, the National Plan of Integrated Airport Systems (NPIAS) was reviewed for civilian, commercial service and military airports located near the site. There is a civilian airport located approximately 9,500 feet from the Project Site. However, there are no civilian, commercial service airports located within 2,500 feet of the site. There are no military airports located within 15,000 feet of the site (**Attachment 1**). Therefore, no additional review is required.
Coastal Barrier Resources Coastal Barrier Resources Act, as amended by the Coastal Barrier Improvement Act of 1990 [16 USC 3501]	Yes No ☐ ☒	Based on the FEMA Firmette 360057 0010E, the Project Site is not located in or immediately adjacent (within 150 feet) to a Coastal Barrier Resource Area System Unit or Otherwise Protected Area (**Attachment 3**).
Flood Insurance Flood Disaster Protection Act of 1973 and National Flood Insurance Reform Act of 1994 [42 USC 4001-4128 and 42 USC 5154a]	Yes No ☐ ☒	Based on the effective FEMA Firmette panel number 3600570010E, portions of the Site are located within a FEMA designated flood zone (100-year floodplain, Special Flood Hazard Area [SFHA] - AE Zone). However, based on the preliminary FEMA Firmette maps numbers 36007C0329F and 36007C0333F, the entire Project Site is located within a FEMA designated flood zone (100-year floodplain, Special Flood Hazard Area [SFHA] - AE Zone) (**Attachment 3**). Proof of National Flood Insurance Program (NFIP) insurance is not required because the Project structures are uninsurable. http://www.nfipiservice.com/watermark/eligible_for_coverage.html

STATUTES, EXECUTIVE ORDERS, AND REGULATIONS LISTED AT 24 CFR 50.4 & 58.5		
Clean Air Clean Air Act, as amended, particularly section 176(c) & (d); 40 CFR Parts 6, 51, 93	Yes No ☐ ☒	The Project is located in Broome County, which is listed as a current attainment county for ozone, particulate matter, sulfur dioxide, lead, carbon monoxide, and nitrogen dioxide (**Attachment 1**). The Project involves the conversion of a defunct sanitary pump station to a stormwater pump station in a residential neighborhood. This Project does not involve work that will substantively affect the New York State Department Environmental of Conservation (NYSDEC) Air Quality State Implementation Plan (SIP). It is recommended that construction-related activities are conducted in such a way as to ensure acceptable air quality during these activities (e.g., through minimization of volatile organic compounds and nitrogen oxides emissions, mindful operation of gas-powered construction equipment to avoid prolonged idling, or fugitive dust management during construction). It is also recommended that low-VOC materials and inventory and energy star efficient equipment are used, as practicable. EPA, *Nonattainment Areas for Criteria Pollutants* https://www.epa.gov/green-book EPA, *8-Hour Ozone (2008) Designated Area Area/State/County Report.* September 22, 2016 https://www3.epa.gov/airquality/greenbook/hbca.html#Ozone_8-hr.2008.New_York EPA, *Recent Updates: Federal Register Notices Published or Effective After September 22, 2016* http://www.epa.gov/airquality/greenbook/adden.html
Coastal Zone Management Coastal Zone Management Act, sections 307(c) & (d)	Yes No ☐ ☒	Not applicable. The Project Site is not located in a Coastal Zone (**Attachment 3**).
Contamination and Toxic Substances 24 CFR Part 50.3(i) & 58.5(i)(2)	Yes No ☐ ☒	**Summary of Findings:** The property on which the pump house is located, the Project Site, is not listed on a U.S. Environmental Protection Agency (EPA) Superfund National Priorities or Comprehensive Environmental Response, Compensation, and Liability Act (CERCLA) list or equivalent State list, and is not located within 3,000 feet of a toxic or solid waste landfill site. Based on review of the NYSDEC Bulk Storage database, the

		Project Site does not have underground storage tanks, and is not known or suspected to be contaminated by toxic chemicals or radioactive materials. Moreover, a review of the NYSDEC Spill Incident database identified no spills on the Project Site. There are 22 EPA listed permitted facilities located within 3,000 feet of the Project Site. Of the 22 facilities, 20 facilities have no violations reported, therefore, are not considered a hazard that could affect the health and safety of occupants or conflict with the intended utilization of the Project Site. Facilities with no permit violations are not considered a hazard because the facilities are in compliance with permit conditions that are enforced and meet standards that protect public health and the environment by preventing releases to the environment. Of the two remaining facilities, one of the facilities, Vestal Water Supply, has no data available from the ECHO facility report. This facility is listed under the New York State Superfund Site database though there is no data available from the ECHO facility report. Vestal Water Supply is located on a 225-acre property located approximately 2,900 – 4,000 feet northeast from the Project Site. The Vestal Water Supply site includes two supply wells located in Vestal, New York. The site is a municipal well contaminated by a bulk chemical handling facility. After contamination was discovered in 1980, the well was taken out of service. The well was returned to service in 1988. The well had been contaminated with volatile organic compounds (VOCs). VOCs are potentially harmful contaminants that can easily evaporate into the air. Similar contaminants were detected in Well 1-1, which is located in Water District 1. The two were originally listed as one Superfund site and were later separated into two Superfund sites: Vestal Water Supply Well 1-1 and Vestal Water Supply Well 4-2. After immediate actions to protect public health and the environment, the site's long-term remedy was put in place. Following the completed construction of the site's remedy, EPA took the site off the Superfund Program's National Priorities List in September 1999. After immediate actions to

		protect public health and the environment, the site's long-term cleanup is ongoing. There are currently no human or environmental exposures to contaminated groundwater and soils. As such, this Superfund Site will not affect the Project Site, which is located southwest of this Superfund Site. The remaining EPA listed permitted waste water discharger facility is the Vestal MS4 Storm Sewers facility. This facility is located town-wide, and has two quarters in noncompliance, between 4/1/2014 and 9/30/2014, for both a schedule event violation and for violations found during a MS4 audit. Additionally, the audit determined that the Vestal MS4 system was in noncompliance with certain terms and conditions of the NYSDEC MS4 General Permit. Those violations included failure to fully implement and update the Stormwater Management Program Plan, failure to fully develop and implement an illicit discharge detection and elimination program, failure to fully develop and implement a stormwater construction program, failure to fully develop and implement a post-construction program, and failure to fully develop and implement a pollution prevention and good housekeeping program and complete self-assessments of municipal facilities as required. An Administrative Compliance Order was issued to order the Town of Vestal to comply with MS4 General Permit conditions, and a settlement was reached on 2/11/2015. Based on the EPA Toxic Release Inventory (TRI), no releases of hazardous substances from the facility have occurred. Any potential discharge from the sewer system would be diluted and transported downstream by the Susquehanna River and the violations reported at this facility are associated with administrative schedule events being missed, this facility is unlikely to adversely affect the Project Site or conflict with the intended utilization of the Project Site. Addresses located within 1,000 feet of the Project Site were searched on the NYSDEC Spill Incident Report database. There is one reported spill on nearby flood control property which consisted of an unknown amount of waste oil. This spill was closed by the NYSDEC on

		10/21/1994. A spill being closed by the NYSDEC means that the records and data submitted indicate that the necessary cleanup and removal actions have been completed and no further remedial activities are necessary under this spill report number. There are several bulk storage and hazardous waste handlers within a 3000-foot radius of the Subject Property. Babson Realty LLC is located 300 feet south of the Subject Property. Records show that tanks have been closed and removed from this site. Therefore, the site is not considered a hazard that would affect the quality of the environment at the Subject Property. Town of Vestal Property, Con-Way Eastern Express, Express Mart 320, Kwik-Fill, Petr All-Corp, Valvoline LLC, Quickway, Speedway, and Monro Muffler/ Brake are bulk storage facilities located east of the Subject Property across the Choconut Creek. These sites are not expected to pose a hazard to Project Site because the facilities are permitted and regulated under the NYSDCE bulk storage tank program which requires leak detection, containment, and monitoring. Additionally, no releases from the facilities have been identified in available data bases (TRI), these sites are not located close to the Project Location (see attached), and Choconut Creek acts as a hydraulic barrier for surficial ground water located between the sites and the Project Site. Vestal Senior High School, Quick Check Mini Mart, Windsor Central School District, Cole Muffler Inc, Mavis Tire Supply, Valvoline LLC, Firestone Complete Auto Repair, and Castrol Premium Lube Express are all bulk storage sites located greater than 2,500 feet from the Subject Property. These sites are not expected to pose a hazard to Project Site because the facilities are permitted and regulated under the NYSDCE bulk storage tank program which requires leach detection, containment and monitoring; no releases from the facilities have been identified in available data bases (TRI); no violations have been reported for the facilities and the facilities are located greater than 2,500 feet from the Project Site. A review of the EPA Resource Conservation and Recovery (RCRA) and NYSDEC Environmental Remediation databases provide no indication of

		past uses of the surrounding properties that are likely to adversely affect the Project Site or conflict with the intended utilization of the Project Site. The Project involves only minor excavation of soils near the pump house, which will remain onsite. If there are construction wastes generated, according to the type of waste generated, it will be appropriately disposed of according to construction waste management practices in an appropriate, legally compliant receiving facility. *Conclusion*: Based on a review of available environmental records for the Project Site and surrounding area, the Project Site is unlikely to contain hazardous materials, contamination, toxic chemicals and gases, and radioactive substances, where a hazard could affect the health and safety of occupants or conflict with the intended utilization of the Project Site. (**Attachment 5**).
Endangered Species Endangered Species Act of 1973, particularly section 7; 50 CFR Part 402	Yes No ☒ ☐	According to information reviewed from the NYSDEC Environmental Resource Mapper (**Attachment 6**), the Site is located within the NYSDEC's designated rare, threatened, or endangered species generalized review area. Tectonic submitted a request to the NYSDEC Natural Heritage Program (NHP) for records of threatened or endangered species in the Project Site. A response was received from the NHP on February 19, 2015, which identified potential for the Hellbender (Special Concern) and the Yellow Lampmussel (Unlisted) in the vicinity of the Project Site, and this information was again confirmed on September 2, 2016 (**Attachment 6**). NYSDEC reviewed the Project and it was determined that the Project will not affect the Hellbender species. The NYSDEC indicated that it would issue a permit for the work to proceed. Project activities will be completed in accordance with all applicable federal, state and local laws, regulations, and permit requirements and conditions. Permits required for this Project shall be obtained by the Town before commencing work and appended to the environmental review record when received from the permitting agencies (**Attachment 2**).

		The United States Fish and Wildlife Service (USFWS) lists the northern long-eared bat (*Myotis septentrionalis*) and migratory birds of concern as species that could occur in the area of the Project Site (**Attachment 6**). The northern long-eared bat roosts underneath tree bark, in cavities, and in the crevices of dead and live trees. The Project is located in a residential area with no contiguous forest habitat. The Project will involve the removal of 6-8 white pine trees and arborvitae in the area where ground disturbance will occur. A review of photos of the Project Site, the trees, and the surrounding area indicates no summer/ roosting habitat for the northern long-eared bat (i.e. there is not sloughing of bark or open cavities/ crevices). After a review of the Project scope in relation to the aforementioned species' breeding, foraging, and habitat requirements, it was concluded that the Project would have no effect on the above species. Accordingly, a No Effect Determination was submitted to the USFWS on February 4, 2015 to provide notice of the proposed Project and to document compliance with Section 7 of the Endangered Species Act (ESA), as well as the Migratory Bird Treaty Act (MBTA) and the Bald and Golden Eagle Protection Act (BGEPA) (**Attachment 6**). USFWS acknowledged receipt of the No Effect Determination on February 24, 2015 (**Attachment 6**). Due to the length of time elapsed since the initial review, a second No Effect Determination was sent to the USFWS on December 6, 2016 (**Attachment 6**). If a USFWS response is not received within 30 days from submission of the No Effect Determination to USFWS, then GOSR may presume that GOSR's No Effect Determination is informed by the best available information and its project responsibilities under Section 7 of the ESA have been fulfilled. The USFWS response or No Effect Determination acknowledgement for this Project will be appended, if received, in **Attachment 6**. NLEB are known to be awakened by noise. The construction noise is expected to awaken the bats

		and the bats are expected to leave the area. Additionally, tree removal is anticipated to occur outside the NLEB pup season (June 1- July 31) or the active season (April 1 – October 31). USFWS Project Reviews, NYS: https://www.fws.gov/northeast/nyfo/es/step2.htm
Explosive and Flammable Hazards 24 CFR Part 51 Subpart C	Yes No ☐ ☒	Acceptable separation distance requirements do not apply to this project because the definition for "HUD-assisted projects" in 24 CFR Part 51.201 is predicated on whether the project increases the number of people exposed to hazardous operations. The environmental review for this Project activity involves a proposal to provide for the conversion of a defunct sanitary pump station to a stormwater pump station. Pursuant to the 24 CFR Part 51.201 "HUD-assisted project" definition, this Project does not involve "the development, construction, rehabilitation, modernization or conversion with HUD subsidy, grant assistance, loan, loan guarantee, or mortgage insurance, of any project which is intended for residential, institutional, recreational, commercial or industrial use." Therefore, there is no review required under 24 CFR Part 51 Subpart C.
Farmlands Protection Farmland Protection Policy Act of 1981, particularly sections 1504(b) and 1541; 7 CFR Part 658	Yes No ☐ ☒	Not applicable. This Project occurs in a developed area and does not involve the conversion of farmland to other type use. Additionally, the Project will occur in an area that contains "alluvial land" and "cut and fill lands, silty material" that is not prime farmland, according to the U.S. Department of Agriculture (USDA) Natural Resources Conservation Service (NRCS) Farmland Classification Map for the Project Site (**Attachment 7**).
Floodplain Management Executive Order 11988, particularly section 2(a); 24 CFR Part 55	Yes No ☒ ☐	The Project Site is located within a FEMA designated flood zone (100-year floodplain, SFHA - AE Zone) (**Attachment 3**). An 8-step review of the Project pursuant to 24 CFR Part 55 was undertaken. The Floodplain Management Determination (EO 11988) documents the reasoning for locating the proposed Project in flood zone (**Attachment 4**). Moreover, the Town is required to obtain a NYSDEC part 501 Permit for Flood Control Land Use.
Historic Preservation National Historic Preservation Act of 1966, particularly sections	Yes No ☒ ☐	The NY State Historic Preservation Office (SHPO) reviewed the Project and determined on January 21, 2016 (**Attachment 8**), this Project

106 and 110; 36 CFR Part 800; Tribal notification for new ground disturbance.		will have no effect on historic properties. The 75% plans do not include new areas of ground disturbance or disturbance to any additional structures. Therefore, there is no need to resubmit Project materials to the SHPO. Project information was sent to the Stockbridge-Munsee Mohican Tribe, Oneida Indian Nation, Delaware Nation, Onondaga Nation, Delaware Tribe of Indians, Seneca-Cayuga Nation, and Tuscarora Tribe of Indians. The Tribal Historic Preservation Officer (THPO) of the Stockbridge Munsee Mohican Tribe determined that the tribe has no significant cultural resource concerns with this Project. The Tribal Historic Preservation Officer of the Oneida Nation indicated that the Project lies outside of the Oneida's aboriginal territory. The Tribal Historic Preservation Officer of the Delaware Nation found no concerns with the Project. At this time no response has been received from the other Nations/Tribes. However, if a response is received, it will be appended to the environmental review record, and the response will be considered in light of the Project activities occurring at the Project Site. No further action is required. See THPO findings, annexed hereto as **Attachment 8**. In the event any inadvertent discoveries of human remains and/or cultural resources including, but not limited to, funerary objects, sacred objects and objects of cultural patrimony are made during execution of the project scope, then work shall be halted immediately and the SHPO and the THPOs of the Stockbridge-Munsee Mohican Tribe, Oneida Indian Nation, Delaware Nation, Onondaga Nation, Delaware Tribe of Indians, Seneca-Cayuga Nation, and Tuscarora Tribe of Indians shall be consulted before work can be resumed.
Noise Abatement and Control Noise Control Act of 1972, as amended by the Quiet Communities Act of 1978; 24 CFR Part 51 Subpart B	Yes No ☐ ☒	The proposed use is not a noise-sensitive use. The proposed work is not expected to generate excessive noise during the short-term construction work and will adhere to local noise control standards. Project activities will be completed in accordance with all applicable federal, state and local laws, regulations, and permit requirements and conditions. Permits required for this Project

		shall be obtained by the Town before commencing work and appended to the environmental review record when received from the permitting agencies (**Attachment 2**).
Sole Source Aquifers Safe Drinking Water Act of 1974, as amended, particularly section 1424(e); 40 CFR Part 149	Yes No ☒ ☐	The Project Site is located within the surficial boundaries of the Clinton Street Ball Park Sole Source Aquifer. An Initial Screen/Preliminary Review for the Project was sent to the EPA on October 3, 2016. The EPA completed a Sole Source Aquifer Review and determined that the Project satisfies the requirements of Section 1424(e) of the Safe Drinking Water Act. (**Attachment 9**)
Wetlands Protection Executive Order 11990, particularly sections 2 and 5	Yes No ☒ ☐	The Project Site is located adjacent to and partially within a federally designated wetland. (**Attachment 3**). An 8-step review of the project pursuant to 24 CFR Part 55 was undertaken. The Wetlands Protection (EO 11990) Determination documents the reasoning for locating the proposed Project in wetland (**Attachment 4**). The Applicant may be required to obtain a USACE permit pursuant to Section 404 and 401 of the Clean Water Act, and also a NYSDEC Article 15 Protection of Water permit. The Applicant must provide the permits and/or certification, or provide documentation from the USACE and NYSDEC indicating that the permits are not needed. Project activities will be completed in accordance with all applicable federal, state and local laws, regulations, and permit requirements and conditions. Permits required for this Project shall be obtained by the Town before commencing work and appended to the environmental review record when received from the permitting agencies (**Attachment 2**).
Wild and Scenic Rivers Wild and Scenic Rivers Act of 1968, particularly section 7(b) and (c)	Yes No ☐ ☒	Not applicable, as there are no wild and scenic rivers within Broome County, as designated by the U.S. Department of the Interior (**Attachment 3**). There are no National River Inventory rivers within Broome County. Additionally, there are no State designated wild, scenic, or recreational rivers within or near the Project Site. National Inventory Rivers: http://www.nps.gov/ncrc/programs/rtca/nri/states/ny.html Designated Rivers: http://www.rivers.gov/new-york.php

ENVIRONMENTAL JUSTICE		
Environmental Justice Executive Order 12898	Yes No ☐ ☒	This Project does not occur in a State-identified EJ area (**Attachment 10**). The Project is intended to provide mitigation to alleviate flooding in an existing neighborhood. The Project does not contribute to or promote environmental injustice. http://www.dec.ny.gov/docs/permits_ej_operations_pdf/broomeej.pdf

Environmental Assessment Factors [24 CFR 58.40; Ref. 40 CFR 1508.8 &1508.27] Recorded below is the qualitative and quantitative significance of the effects of the proposal on the character, features and resources of the Project area. Each factor has been evaluated and documented, as appropriate and in proportion to its relevance to the proposed action. Verifiable source documentation has been provided and described in support of each determination, as appropriate. Credible, traceable and supportive source documentation for each authority has been provided. Where applicable, the necessary reviews or consultations have been completed and applicable permits of approvals have been obtained or noted. Citations, dates/names/titles of contacts, and page references are clear. Additional documentation is attached, as appropriate. All conditions, attenuation or mitigation measures have been clearly identified.

Impact Codes: Use an impact code from the following list to make the determination of impact for each factor.
(1) Minor beneficial impact
(2) No impact anticipated
(3) Minor Adverse Impact – May require mitigation
(4) Significant or potentially significant impact requiring avoidance or modification which may require an Environmental Impact Statement

Environmental Assessment Factor	Impact Code	Impact Evaluation
LAND DEVELOPMENT		
Conformance with Plans / Compatible Land Use and Zoning / Scale and Urban Design	1	The proposed Project is consistent with the Town zoning classification for the parcel, which is "Public Services, 821." This zoning classification is designated as land used for the accumulation, storage, or diversion of water for flood control purposes only. Moreover, the Town of Vestal Comprehensive Plan identifies the goal of establishing a stream protection overlay district (including in the area of Choconut Creek) for the purposes of implementing protective measures to protect private property from flooding and erosion whilst maintaining the ecological integrity of the waterways. The Project is in accordance with this goal because it aims to protect private property from flooding and is not expected to adversely affect Choconut Creek/ Ecological integrity. Furthermore, according to the NYRCR Broome Plan, this Project will increase protection for approximately twenty (20) residential properties and several businesses, and it will create resiliency during future flooding events for the Town of Vestal. Project activities will be completed in accordance with all applicable federal, state and local laws, regulations, and permit requirements and conditions. Permits required for this Project shall be obtained by the Town before commencing work and appended to the environmental review record when received from the permitting agencies (**Attachment 2**).
Soil Suitability/ Slope/ Erosion/ Drainage/ Storm Water Runoff	1	USDA NRCS maps provide information on soils types and properties that influence development of building sites. The information is intended for land use planning, evaluating land use alternatives, and for planning site investigations prior to design

		and construction. (See attached USDA Soil Map in **Attachment 7**). According to the NRCS soils map data for "Shallow Excavations," the rating class and limiting features for the soil type in the location of the proposed excavation is somewhat limited (**Attachment 7**). Other portions of the Project (mainly the levee) are deemed very limited. Work on the levee will only entail minor excavation to install gravel bedding for the pipe and the pipe will be covered with top soil. It is presumed that designs and specifications used in construction will appropriately address soil suitability constraints. Work performed north and east of the pump station to lay piping for the movement of water into the pump station is not expected to cause erosion or sedimentation. No potential undesirable impacts are anticipated and the Project Site should be improved in terms of its landscape and stability. This Project occurs in an area that does not appear to have erosion or sedimentation. There is a levee adjacent to the Project Site which protects the site from the flowing water of Choconut Creek. The property and adjacent swale have shrubs and grasses established. Construction work involving disturbance of soils in previously disturbed areas will be in accordance with permits that must be acquired for the Project. Per the applicable USGS Topographic Map (**Attachment 1**), the Project Site is located adjacent to Choconut Creek at an elevation of approximately 840 feet. This pump station is located on a relatively flat slope and there is a drainage swale west and north of the pump station. The drainage swale is several feet below the elevation of the pump station. The work is not expected to create a condition that would leave the site susceptible to slope failure and will be in accordance with engineered plans (**Attachment 2**).
Hazards and Nuisances including Site Safety and Noise	2	Normal construction and noise hazards will be present during the construction phase of the Project. Construction practices would be addressed under existing New York State, Broome County, and local municipality regulations. Based on a review of available environmental records for the Project Site and surrounding area, the Project Site is unlikely to contain hazardous materials, contamination, toxic chemicals and gases, and radioactive substances, where a hazard could affect the health and safety of occupants or conflict with the intended utilization of the Project Site. Therefore, a Phase I Environmental Site Assessment (ESA) or Phase II Investigation is not warranted. As such, no further action is required at this time. Additional details are provided in the Toxic/ Hazardous/ Radioactive Materials, Contamination, Chemicals, or Gases [24 CFR 58.5(i)(2)] section below, and its associated maps, and the U.S. EPA and NYSDEC reports are provided in the Robert Street Stormwater Pump Station Upgrade HUD Environmental Standards Review Report (**Attachment 5**).

Energy Consumption	3	The Project will have limited expansion of energy consumption needs relative to conditions prior to the flooding events. As the Project Site is not currently used to pump water or wastewater, the site currently does not consume energy. Therefore, the Project will create a condition where energy consumption may increase when the new pump station is used. However, the site is only anticipated to consume energy during severe rain/ storm events, and, thus, will only be used in very limited circumstances. The Project calls for an electrical connection to be installed underground from a nearby 3-phase utility pole located adjacent to NYS Route 434, with readily available electricity. The electric service is proposed to run along the area of the concrete influent structure and follow underground within the vicinity of the 36-inch diameter gravity flow influent pipe to the existing Robert Street Pump Station. Due to the anticipated limited consumption of energy by the pump station, this Project will have minor adverse impacts.

Environmental Assessment Factor	Impact Code	Impact Evaluation
SOCIOECONOMIC		
Employment and Income Patterns	2	This Project has no potential to adversely affect employment opportunities or income patterns. Moreover, the NYRCR Broome Plan for this Project identifies that eliminating or reducing the frequency of flooding of this area will prevent/ reduce business interruptions for approximately five (5) businesses in the area.
Demographic Character Changes, Displacement	2	The Project should not induce any change in the demographic character of the area. There is no known potential for the project to cause the displacement of individuals or families, destroy jobs, local businesses or public community facilities, or disproportionately affect particular populations. Instead this Project entails mitigation measures which will protect residential homes and prevent possible displacement of residents that might occur if the flooding of this area were allowed to continue unmitigated.

Environmental Assessment Factor	Impact Code	Impact Evaluation
COMMUNITY FACILITIES AND SERVICES		
Educational and Cultural Facilities	2	The Project will not introduce any new populations that would increase the student population of the area. As such, the Project will not have an impact on educational facilities.
Commercial Facilities	2	The Project will not introduce any new commercial development that would require additional retail services or other commercial facilities.
Health Care and Social Services	2	The Project will not introduce any new development that would require the availability of routine or emergency health services.
Solid Waste Disposal / Recycling	2	The Project will not introduce new business development that would generate solid wastes on an ongoing basis. Soils will be retained onsite. If there are construction wastes generated,

		according to the type of waste generated, it will be appropriately disposed of according to construction waste management practices in an appropriate, legally compliant receiving facility.
Waste Water / Sanitary Sewers	2	The Project involves the conversion of an out of service sanitary sewer pump station into a stormwater pump station. Sanitary sewer feeds to the pump station will be sealed off to prevent sanitary wasted from reaching the stormwater pump station. Thus, the purpose of the pump station will be for stormwater only and will not introduce development that would generate waste water.
Water Supply	2	The Project will not increase demand for water supply.
Public Safety - Police, Fire and Emergency Medical	2	The Project will not generate new demand for police services.
Parks, Open Space and Recreation	2	The Project will not introduce new development that would generate demand for open space resources or impede open space access. The Project involves existing flood control land and will continue the existing use of this land. There is no effect on park, open space or recreational land as there are none located at or adjacent to the Project Site. No further action will be required.
Transportation and Accessibility	2	The Project involves the conversion of an out of service sanitary sewer pump station into a stormwater pump station to discharge into Choconut Creek. Besides limited trips generated by construction vehicles during a short window of construction, the Project will not introduce new development that generates continuing demand for transportation access or transportation services.

Environmental Assessment Factor	Impact Code	Impact Evaluation
NATURAL FEATURES		
Unique Natural Features, Water Resources	2	According to NYSDEC's Environmental Resource Map, the Project Site is located in a Significant Natural Communities buffer. This map's data layer identifies locations within ½ mile of an identified significant natural community. The pump station will discharge stormwater to the Choconut Creek which is a NYSDEC designated Class C (Standard C) watercourse. The Choconut Creek then discharges into the Susquehanna River, which is a Standard A, Class A watercourse. The Susquehanna River is standard A, Class A "from Tioga-Broome county boundary line southwest of Endicott Village to Rock Bottom Dam in Binghamton, New York." However, the Project proposes to rehabilitate existing infrastructure and install piping in existing swales on flood control land. Thus, the Project will not affect significant natural communities as work occurs mostly in previously disturbed areas. During periods of heavy rain, stormwater flows through public sewer lines to the County's public sewage treatment facilities. This influx displaces actual sewage into the Choconut Creek

		which is designated by NYSDEC as a Standard C, Class C watercourse. The Choconut Creek then discharges into the Susquehanna River, an NYSDEC-designated Class "A", which indicates it's the highest and best source of water supply for human consumption. However, the proposed Project is to convert an out of service sanitary sewer pump station into a stormwater pump station. The Project will not interfere with the restoration of a vital ecosystem and preservation of its natural heritage. All work will be completed in accordance with federal, state and local permits and their conditions and requirements as required for the Project in order to ensure the preservation of water quality.
Vegetation, Wildlife	2	The Project will involve disturbance to previously disturbed areas within designated flood control land. Disturbed areas will be restored to pre-existing conditions using natural vegetation. For a detailed vegetation and wildlife analysis, see the Endangered Species (Endangered Species Act of 1973, particularly section 7; 50 CFR Part 402) section above.
Other Factors: Environmental Design	1	The rehabilitation of the Project Site is intended to sustain the area and build resiliency of this area during future flooding events while not detracting from visual quality.

Additional Studies Performed:

Attachments:

- Attachment 1: Project Location Maps (Aerial Photograph, Street Map, Topographic Map, Airport Hazards Map, Airport Site Documentation, and Clean Air Nonattainment Area Map)
- Attachment 2: 75% Construction Drawings & Permit Documentation (SPDES)
- Attachment 3: NYSDEC Environmental Resource Map, USFWS NWI Map, NYS Coastal Boundary Map, FEMA Firmette (current and preliminary maps), and Wild and Scenic Rivers Map
- Attachment 4: Floodplain Management and Wetland Determination
- Attachment 5: HUD Environmental Standards Review Report and Supporting Documentation
- Attachment 6: USFWS Acknowledgement, NHP Responses, USFWS Letters, Official Species List, and Trust Resources List
- Attachment 7: NRCS Soil Resource Map and Farmland Classification Map
- Attachment 8: SHPO and THPO Documentation
- Attachment 9: Sole Source Aquifer Map, Sole Source Aquifer Project Review, U.S. EPA Sole Source Aquifer Compliance Documentation
- Attachment 10: Potential Environmental Justice Areas Map

Field Inspection (Date and completed by)**:**

- 8/5/2016 Tectonic– Site visit and pictures.

List of Sources, Agencies and Persons Consulted [40 CFR 1508.9(b)]**:**

- Project Plans developed by Barton & Loguidice, D.P.C. dated June 2016
- NY Rising Community Reconstruction Plan, *NYRCR Broome County*, March 2014 https://stormrecovery.ny.gov/sites/default/files/crp/community/documents/broomecounty_nyrcr_plan.pdf
- Gary Campo, Town Engineer, Town of Vestal
- Federal Aviation Administration (FAA)
- Federal Emergency Management Agency (FEMA)

- United States Environmental Protection Agency (USEPA)
  - EPA Superfund Program: *VESTAL WATER SUPPLY WELL 1-1*, VESTAL, NY. https://cumulis.epa.gov/supercpad/cursites/csitinfo.cfm?id=0202228
  - EPA Superfund Program: *VESTAL WATER SUPPLY WELL 4-2*, VESTAL, NY. https://cumulis.epa.gov/supercpad/cursites/csitinfo.cfm?id=0202152
- United States Fish and Wildlife Service (USFWS)
- U.S. Department of Agriculture (USDA)
- Natural Resources Conservation Service (NRCS)
- United States Department of Interior (USDOI)
- National Parks Service (NPS)
- United States Geological Survey (USGS)
- New York State Department of Environmental Conservation (NYSDEC)
- Natural Heritage Program (NHP)
- New York State Department of State (NYSDOS)
- New York State Historic Preservation Office (SHPO)
- New York State Tribal Historic Preservation Office (THPO)
  - Stockbridge-Munsee Mohican Tribe
  - Oneida Indian Nation
  - Delaware Nation
  - Onondaga Nation
  - Delaware Tribe of Indians
  - Seneca-Cayuga Nation
  - Tuscarora Tribe of Indians

List of Permits That Might Be Required (To be added upon receipt):
- USACE Section 404 Permit
- NYSDEC Article 16, Use of State Maintained Flood Control Lands
- NYSDEC Article 15, Protection of Waters permit
- NYSDEC Section 401 Water Quality Certification
- NYSDEC part 501 Permit for Flood Control Land Use

Public Outreach [24 CFR 50.23 & 58.43]**:**
- February 2, 2015 – Publication of Notice of Early Public Review of a Proposed Activity in 100-year Floodplain and Wetland.
- December 12, 2016 – Publication of Notice of Early Public Review of a Proposed Activity in 100-year Floodplain and Wetland.
- December 30, 2016 – Publication of a combined Final Notice and Public Review of a Proposed Activity in a 100-year Floodplain and Wetland, Notice of Finding of No Significant Impact, and Notice of Intent to Request Release of Funds.
- February 25, 2015 – Vestal Town Board Meeting
- July 22, 2015 – Vestal Town Board Meeting

Cumulative Impact Analysis [24 CFR 58.32]**:**
This Project was evaluated according to detailed site plans which encompassed a review of proposed actions. There are no other known future projects in the area of the Robert Street Stormwater Pump Station Upgrade – Town of Vestal Project that would create environmental or social impacts in the area. The Project fits within the surrounding area as it repurposes existing infrastructure and implements new infrastructure to reduce flood impacts on designated flood control land.

Alternatives [24 CFR 58.40(e); 40 CFR 1508.9]

Alternative 1: Pump Station Rehabilitation.

Alternative 1 is the current proposal for the Project reviewed within this environmental review record. Three alternative pumps were examined as noted in the *Basis of Design Report* dated December 2015 and prepared by Barton & Loguidice, D.P.C. The pumps evaluated during the design of the Project plan included conventional submersible pumps, dry pit submersible pumps, and vertical turbine pumps. For each type of pump considered, the pump station would need to be sized accordingly to include two pumps that would be capable of alternating lead/lag pump operation. Both pumps would need to be able to run at the same time during times when the wet well reaches a set high level. This alternative is the preferred alternative because it limits new construction work and repurposes existing infrastructure, thus, limiting the amount of new construction required. This Project involves new construction to install stormwater conveyance piping, a weir, and outflow piping over the levee. The existing pump station structure will be re-purposed for floodwater conveyance. The detailed construction plans contained in the *Basis of Design Report (dated 12/2015)* are based upon a hydrologic analysis of the area.

Alternative 2: Expand Stormwater Retention Capacity.

Alternative 2 involves expanding the capacity of the stormwater retention basin located north of the existing pump station and north of NYS Route 434. This alternative would prevent flood waters from reaching an elevation of 815 feet in the NYSDEC stormwater retention basin and, therefore, prevent the flow of water from the stormwater retention basin to the south under NYS Route 434 and into the Robert Street Neighborhood. This alternative could entail deepening the existing NYSDEC stormwater retention basin and/ or potentially expanding its area. However, this Project is not considered feasible because the existing basin is bound on the south by NYS Route 434, to the West by Choconut Creek, to the north by NYS Route 17 and to the east by private property. These existing boundaries limit the area available for the potential expansion of the stormwater retention basin. As the entire Robert Street Neighborhood is located within the 100-year floodplain per preliminary FIRM data, it might not be effective to alleviate flooding in this neighborhood through increased water retention only. Additionally, any expansion of the NYSDEC stormwater retention basin could potentially affect habitat for plant and animal species or other resources (historic, cultural, etc.). Thus, it is not likely that this is a viable alternative.

Alternative 3: Buyout - Relocate Local Residents and Convert the Neighborhood to Open Space.

Alternative 3 would involve buying out homes that are affected by flooding in the Robert Street Neighborhood. Although this alternative would alleviate damages caused by ponding and flooding in this neighborhood, it is not financially feasible to buyout all of the affected properties in this neighborhood. In addition, it could have an adverse impact on these affected residents and the character of the area. Thus, it is not likely that this is a viable alternative.

Alternative 4: Elevate and/ or Floodproof Structures Prone to Flooding-related Damage.

Alternative 4 involves elevating structures and/ or floodproofing them in place. Elevating the structures in the neighborhood is not feasible due to cost constraints. In addition, many of the residential structures also have basements. Floodproofing areas below the base flood elevation in residential buildings is not permitted under the National Flood Insurance Program except in communities that have been granted an exception that permits floodproofed basements. The Town of Vestal has determined that floodproofing of the homes and businesses is not feasible option due to the cost of floodproofing the affected homes and business. Thus, it not likely that this is a viable alternative.

No Action Alternative [24 CFR 58.40(e)]:

Alternative 5: No Action Alternative [24 CFR 58.40(e)].

The "no action" alternative means that there would be no rehabilitation and mitigation to the existing Robert Street Pump Station in the Town of Vestal and no work would be undertaken to alleviate the flood problem. This would leave the Robert Street Neighborhood and several commercial properties vulnerable

to future flood damage from waters. The "no action" alternative would provide no protection to this residential neighborhood and greater community from future flood events, as mitigation would be compromised due to lack of financial support. Thus, the "no action" alternative is not feasible in relation to the desired objective of creating area resiliency to future flooding events.

Summary of Findings and Conclusions:
The preceding Statutory Checklist and Environmental Assessment Checklist, and the discussion below, document that the proposed work will comply with regulations in 24 CFR part 58 and that there are no direct or cumulative adverse environmental impacts anticipated as a result of the proposed action.

Mitigation Measures and Conditions [40 CFR 1505.2(c)]**:**
Summarize below all mitigation measures adopted by the Responsible Entity to reduce, avoid, or eliminate adverse environmental impacts and to avoid non-compliance or non-conformance with the above-listed authorities and factors. These measures/ conditions must be incorporated into Project contracts, development agreements, and other relevant documents. The staff responsible for implementing and monitoring mitigation measures should be clearly identified in the mitigation plan.
Any change to the approved scope of work will require re-evaluation by the Certifying Officer for compliance with NEPA and other laws and Executive Orders.

This review does not address all federal, state and local requirements. Acceptance of federal funding requires recipient to comply with all federal, state and local laws. Failure to obtain all appropriate federal, state and local environmental permits and clearances may jeopardize federal funding.

If there is any unanticipated discovery of endangered or threatened species, cultural resources, soils contamination, or any other conditions affecting the factors, executive orders, stipulations, and/ or regulations discussed within this assessment, work shall be halted immediately and the appropriate agency will be consulted before work can be resumed.

Law, Authority, or Factor	Mitigation Measure
Floodplain	An 8-step review of the Project pursuant to 24 CFR Part 55 was undertaken. The Floodplain Management Determination (EO 11988) documents the reasoning for locating the proposed Project in flood zone (**Attachment 4**). Moreover, the Town is required to obtain a NYSDEC part 501 Permit for Flood Control Land Use.
Historic and Tribal Preservation	The Project will occur in previously disturbed areas. However, in the event any inadvertent discoveries of human remains and/or cultural resources including, but not limited to, funerary objects, sacred objects and objects of cultural patrimony are made during execution of the Project scope, then work shall be halted immediately and the SHPO and the THPOs of the Stockbridge-Munsee Mohican Tribe, Oneida Indian Nation, Delaware Nation, Onondaga Nation, Delaware Tribe of Indians, Seneca-Cayuga Nation, and Tuscarora Tribe of Indians shall be consulted before work can be resumed.
Wetland Protection	The Applicant may be required to obtain a USACE permit pursuant to Section 404 and 401 of the Clean Water Act, and also a NYSDEC Article 15 Protection of Water permit. The Applicant must provide the permits and/or certification, or provide documentation from the USACE and NYSDEC

	indicating that the permits are not needed before commencing work.
Endangered Species	The Project will not affect any endangered, threatened, or rare species. The NYSDEC NHP response had identified the potential for Hellbender (Special Concern) and the Yellow Lampmussel (Unlisted) in the vicinity of the Project Site. NYSDEC reviewed the Project and it was determined that the Project will not affect the Hellbender species. The NYSDEC indicated that it would issue a permit for the work to proceed. Project activities will be completed in accordance with all applicable federal, state and local laws, regulations, and permit requirements and conditions. Permits required for this Project shall be obtained by the Town before commencing work and appended to the environmental review record when received from the permitting agencies (**Attachment 2**).
Sole Source Aquifer	The Project will not create new impervious services or introduce contaminants into groundwater. Native vegetation will be used to reseed the disturbed area and all topsoil and gravel used will be clean so as not to introduce contaminants into the area. The EPA has suggested considerations to reduce the environmental impacts of this Project including to reduce idling during construction, use of clean diesel, the use of low impact development where possible, cost-efficient, environmental friendly landscaping, and the use of energy-efficient technologies.

Determination:

☒ **Finding of No Significant Impact** [24 CFR 58.40(g)(1); 40 CFR 1508.27]
The project will not result in a significant impact on the quality of the human environment.

☐ **Finding of Significant Impact** [24 CFR 58.40(g)(2); 40 CFR 1508.27]
The project may significantly affect the quality of the human environment.

Preparer Signature: Andrea Dievers Date: 12/30/2016

Name/Title/Organization: Tectonic Engineering and Surveying Consultants, P.C.

Certifying Officer Signature: Lori A Shirley Date: 12/30/2016

Name/Title: Lori A. Shirley, Certifying Officer, GOSR

This original, signed document and related supporting material must be retained on file by the Responsible Entity in an Environmental Review Record (ERR) for the activity/project (ref: 24 CFR Part 58.38) and in accordance with recordkeeping requirements for the HUD program(s).

Attachment 1

Aerial Photograph, Street Map, Topographic Map, Airport Hazards Map, Airport Site Documentation, and Clean Air Nonattainment Area Map

Aerial Photograph

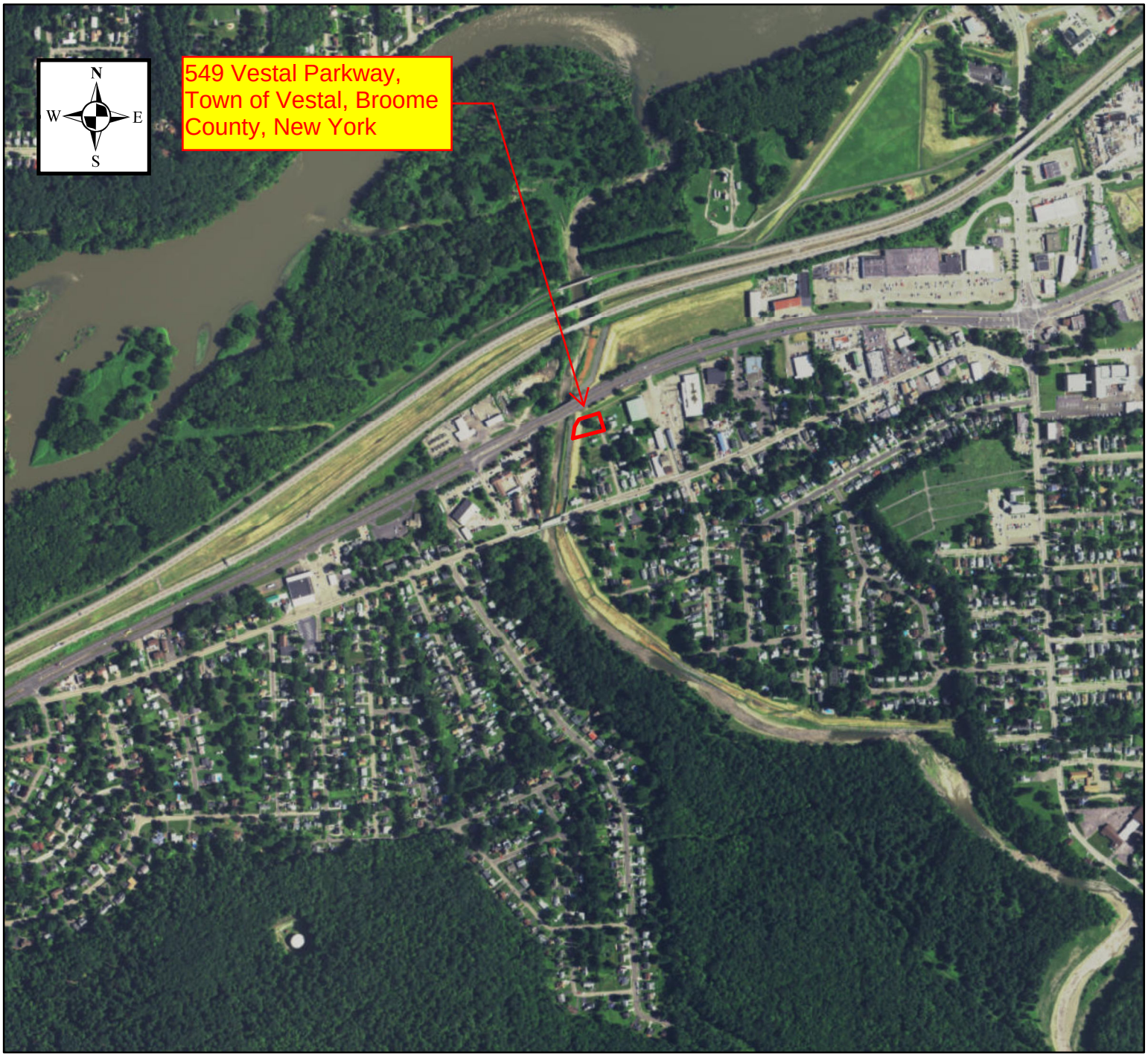

TECTONIC
Practical Solutions, Exceptional Service

0 500 1,000 2,000 Feet

1:10,000

Robert Street Stormwater Pump Station Upgrade
Robert Street
Vestal, NY
Broome County

Legend

Robert Street Stormwater Pump Station (Approximate Boundary)

Street Map

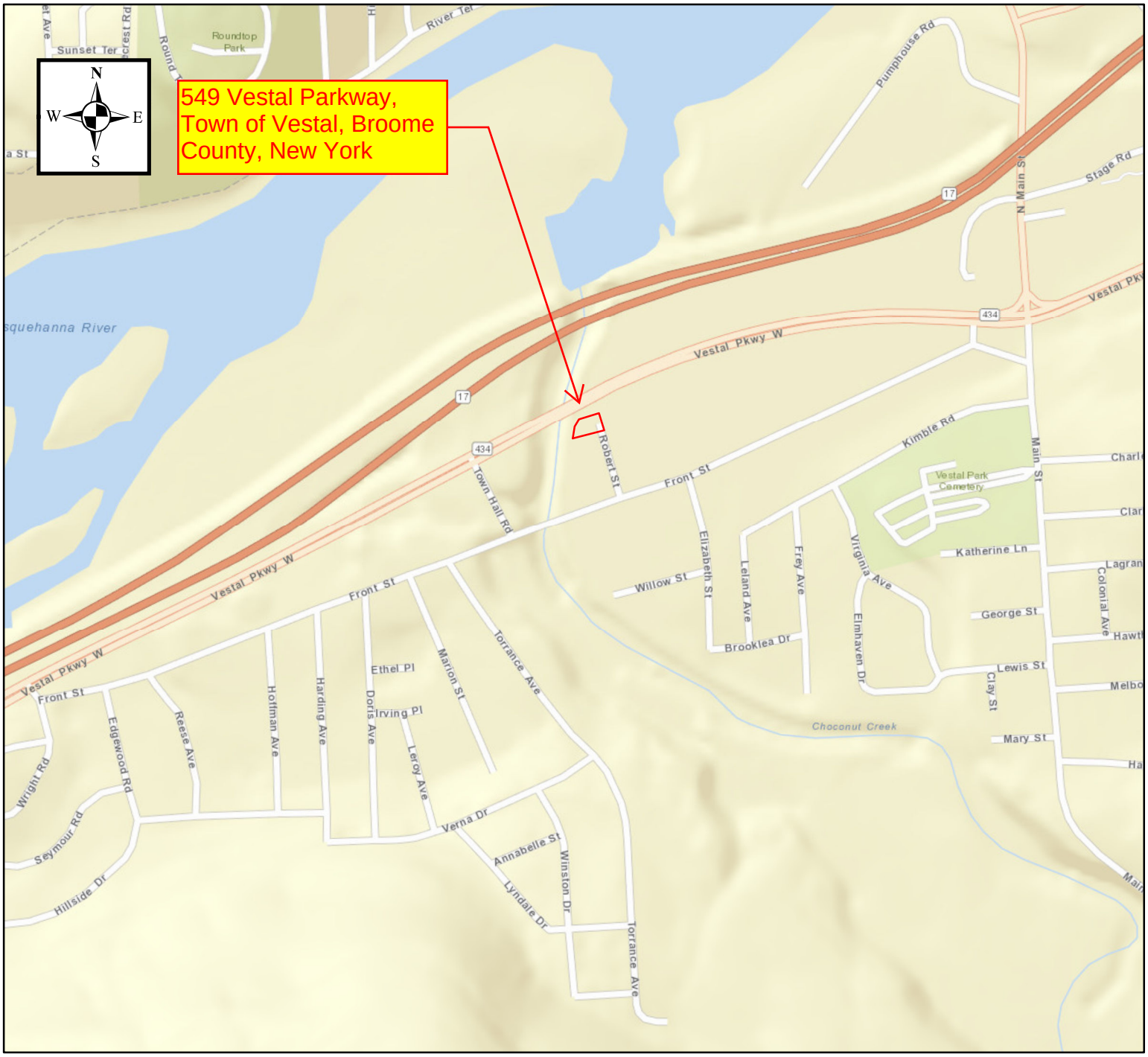

TECTONIC
Practical Solutions, Exceptional Service

0 500 1,000 2,000 Feet

1:10,000

Robert Street Stormwater Pump Station Upgrade
Robert Street
Vestal, NY
Broome County

Legend

Robert Street Stormwater Pump Station (Approximate Boundary)

Topographic Map

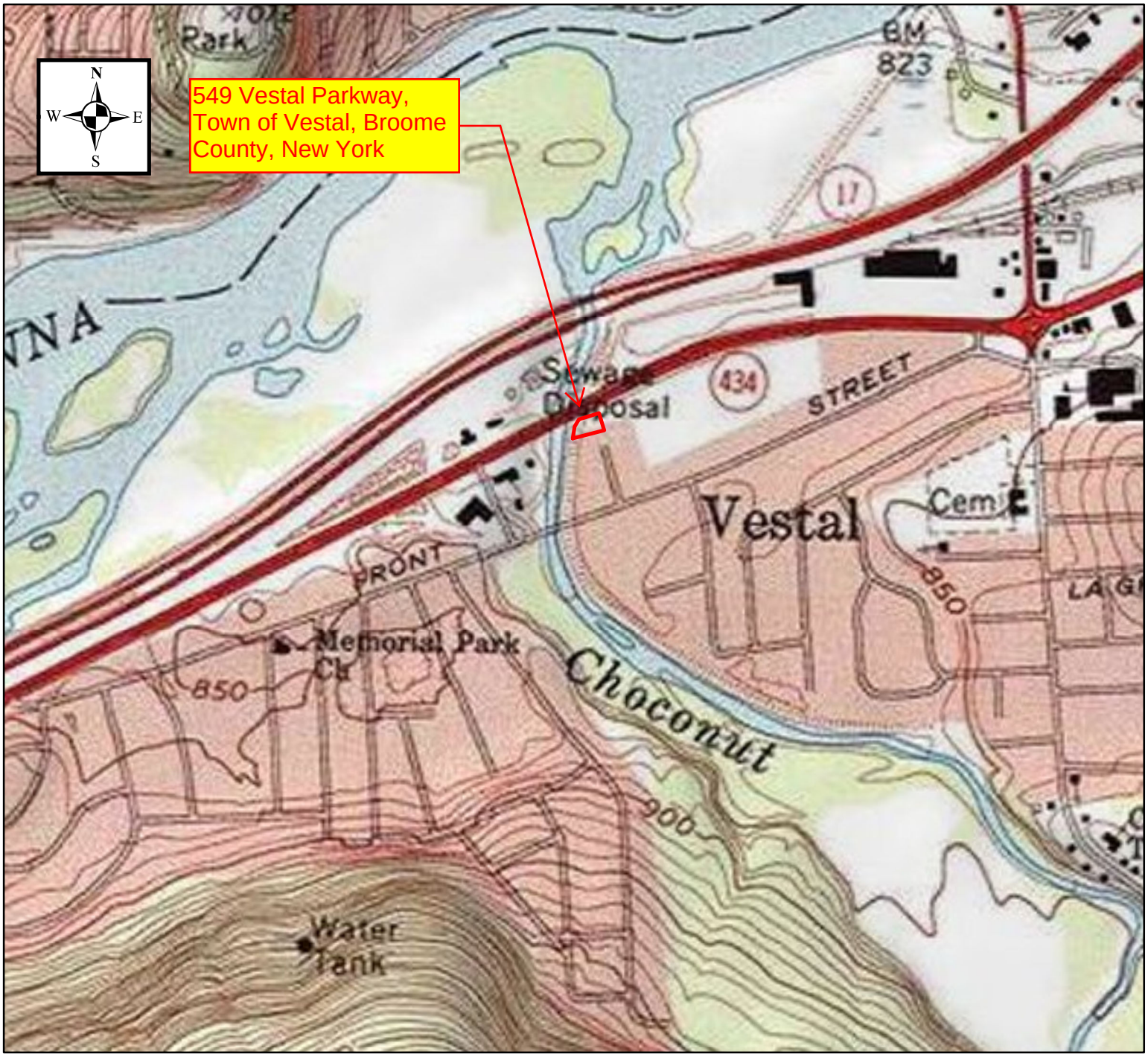

TECTONIC
Practical Solutions, Exceptional Service

0 500 1,000 2,000 Feet

1:10,000

Robert Street Stormwater Pump Station Upgrade
Robert Street
Vestal, NY
Broome County

Legend

Robert Street Stormwater Pump Station (Approximate Boundary)

Airport Hazards Map

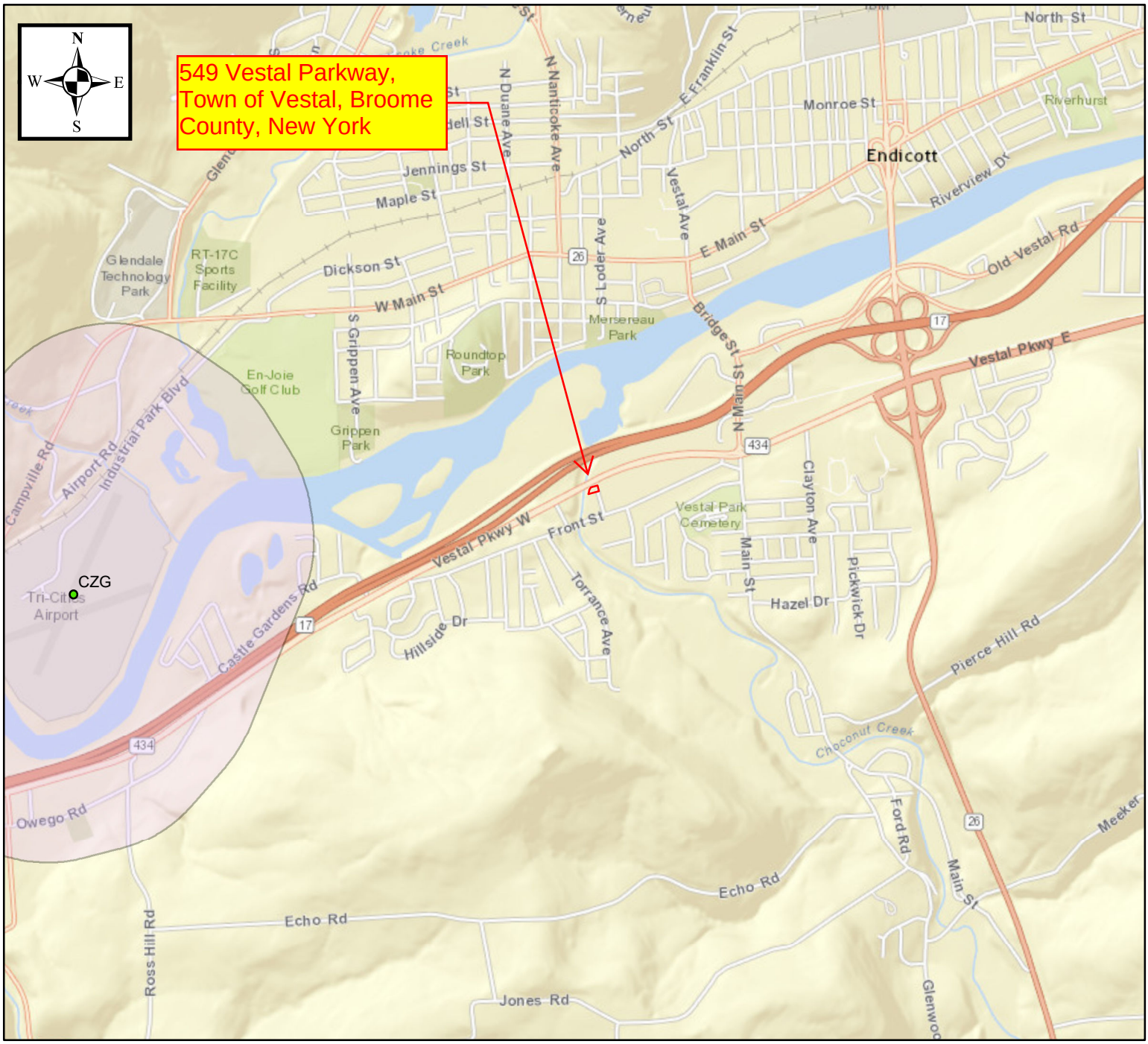

TECTONIC
Practical Solutions, Exceptional Service

0 1,250 2,500 5,000 Feet

1:30,000

Robert Street Stormwater Pump Station Upgrade
Robert Street
Vestal, NY
Broome County

Created: 10/27/2016
Source data: FAA facility data and Airport Master Records and Reports data.

Note: This map identifies all documented airport and heliport facilities located within the shown area.

Legend

- Robert Street Stormwater Pump Station (Approximate Boundary)
- Airport and Heliport Locations (Location ID)
- Civilian Runway Protection Zone (2500 ft)

Aeronautical Information Services - National Flight Data Center (NFDC)

The NFDC website has been consolidated with the FAA's **Aeronautical Information Services** website. Please bookmark the **new Aeronautical Data/NFDC website** location.

Data Effective: **09/15/2016 - 11/10/2016**

CZG (KCZG)

TRI-CITIES

ENDICOTT , NY - UNITED STATES

Summary/Location

View active NOTAMS

Latitude/Longitude	42-4-42.7 N / 76-5-46.8 W
Elevation	832.7 FT
Variation	12 W 1995
From city	3 miles SW of ENDICOTT, NY
ARTCC	ZNY
Section chart	NEW YORK
Time Zone	UTC-5(-4DT)

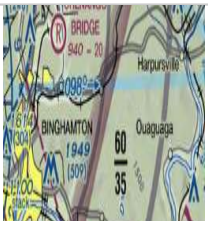

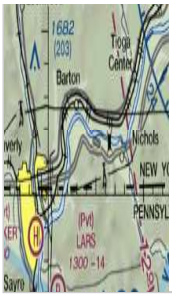

OPERATIONS

Airport Status	Operational
Facility use	Open to the public
Control Tower	No air traffic control tower at airport
FSS	BUFFALO FSS (BUF) Toll Free: 1-800-WX-BRIEF
NOTAMs Facility	CZG (TRI-CITIES)
Attendance	UNATNDD
Wind Indicator	Lighted
Segmented Circle	Yes
Lights	SEE RMK ACTVT REIL RY 03/21; MIRL RY 03/21 - CTAF.
Beacon	Clear and Green ROTG BEACON OBSCURED NORTH & WEST OF ARPT DUE TO HIGH TERRAIN. SS-SR
Landing Fee	No
Fuel	100LL, A+
Int'l Operations	Not a Landing Rights Airport Not an Airport of Entry

COMMUNICATIONS

UNICOM:	122.8 MHz		
CTAF:	122.8 MHz		
ATIS:	None		
RADAR SERVICE:	Approach / Departure		
BINGHAMTON APPROACH:	118.6 MHz	APCH/P	(S-SE)
BINGHAMTON APPROACH/DEPARTURE:	118.6 MHz	APCH/P DEP/P	
	257.625 MHz	APCH/P DEP/P	

BINGHAMTON CLERANCE DELIVERY:	121.7 MHz	CD/P

Remarks:

- CD THRU FLT SVCS 1-888-766-8267.
- APCH/DEP SERVICE PROVIDED BY NEW YORK ARTCC ON FREQS 133.35/372.0 (SAYRE RCAG) WHEN BINGHAMTON APCH CTL CLOSED.

NAVAIDS

NAVAIDS:

Type	ID	Name	Frequency	Hours	Distance	Bearing	Remarks
VORTAC	CFB	BINGHAMTON	112.2 MHz	24 Hours	5.1 nm	159.3°	• OPERATIONAL IFR
VOR/DME	ITH	ITHACA	111.8 MHz	24 Hours	29.8 nm	147.0°	• OPERATIONAL RESTRICTED • VOR PORTION UNUSABLE 360-059 BYD 10 NM BLO 3800'; 060-080 BYD 28 NM BLO 2500'; 081-150 BYD 10 NM BLO 3800'. • DME PORTION UNUSBL 360-160 BYD 20 NM BLO 6500'.
NDB	ALP	ALPINE	245 KHz	24 Hours	31.3 nm	107.7°	• OPERATIONAL IFR
VORTAC	GGT	GEORGETOWN	117.8 MHz	24 Hours	44.3 nm	195.7°	• OPERATIONAL IFR • VOR UNUSBL 105-279 ALL DSTCS BLO 4000 FT.

WEATHER

ID	Type	Frequency	Phone	Distance	Remarks
CZG	WX AWOS-3	119.075 MHz	607-785-2926	0.0 nm	
BGM	WX ASOS		607-729-8335	9.4 nm	
N27	WX AWOS-3	119.925 MHz	570-265-1024	25.3 nm	
N03	WX AWOS-3	132.225 MHz	607-753-9784	31.3 nm	
N23	WX AWOS-3	118.275 MHz	607-561-2333	33.0 nm	

RUNWAY 03/21

Dimensions	3900 ft. x 75 ft.
Surface Type	ASPH
Surface Condition	FAIR
Treatment	
Runway Edge Lights	Medium Intensity
PCN	
Single Wheel	30,000 lbs
Double Wheel	
Double Tandem	
Dual Double Tandem	

Base End: 03

True Alignment	24°
Traffic Pattern	Left
Markings	Non-precision instrument
Markings Condition	Fair
Latitude	42-4-25.0861 N
Longitude	76-5-57.1812 W
Elevation	829.9 ft.
Threshold Crossing Height	
Visual Glide Path Angle	
Visual Slope Indicator	
Runway End Identifier Lights	Yes
TDZE	832.7 ft.

Reciprocal End: 21

True Alignment	204°
Traffic Pattern	Left
Markings	Non-precision instrument
Markings Condition	Poor MARKINGS FADED
Latitude	42-5-0.3633 N
Longitude	76-5-36.4102 W
Elevation	826.2 ft.

Threshold Crossing Height	40 ft. AGL
Visual Glide Path Angle	4°
Visual Slope Indicator	2-light PAPI on right
Runway End Identifier Lights	Yes
TDZE	832.7 ft.

HELIPORTS

None

CHARTS

Chart data valid from 0901Z 10/13/16 to 0901Z 11/10/16.

Minimums

TAKEOFF MINIMUMS

Instrument Approach Procedure (IAP) Charts

RNAV (GPS) RWY 03

RNAV (GPS) RWY 21

VOR-A

CONTACTS

OWNER

VILLAGE OF ENDICOTT
MUNICIPAL BLDG
ENDICOTT, NY 13760
UNITED STATES
Phone: 607-757-2420

MANAGER

GERARD CORPREW
351 INDUSTRIAL PK
ENDICOTT, NY 13760
UNITED STATES
Phone: 607-785-0467

REMARKS

- HIGH TENSION TOWERS 2000' FM EOR 21 60-70' TALL.

Clean Air Nonattainment Area Map

TECTONIC
Practical Solutions, Exceptional Service

0 1,250 2,500 5,000 Feet

1:24,000

Robert Street Stormwater Pump Station Upgrade
Robert Street
Vestal, NY
Broome County

Legend

Vestal - Robert St

Created: 12/2/2016
Source data: Nonattainment area GIS data provided by EPA Green Book Database.
https://www.epa.gov/green-book/green-book-gis-download

Attachment 2

75% Construction Drawings, SPDES Compliance Inquiry, SPDES Compliance Response, and Environmental Permits

Note: Any required permits received for this project will be appended here to the environmental review record upon receipt.

CONTRACT DRAWINGS

TOWN OF VESTAL

ROBERT STREET STORMWATER PUMPING STATION

CONTRACT NO. 1A - GENERAL CONSTRUCTION
CONTRACT NO. 1B - ELECTRICAL CONSTRUCTION

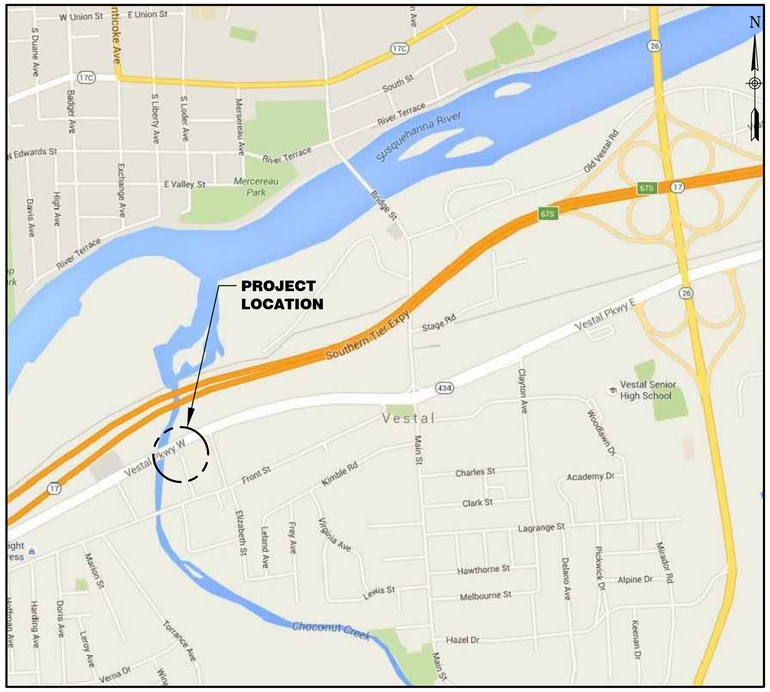

LOCATION PLAN

NOT TO SCALE

TOWN OF VESTAL
BROOME COUNTY, NEW YORK

JUNE 10, 2016

75% CONSTRUCTION DRAWINGS

INDEX

SHEET NO.	TITLE
-	COVER SHEET
G-1	LEGEND AND GENERAL NOTES
G-2	SITE AND YARD PIPING PLAN
G-3	SITE GRADING PLAN
G-4	YARD PIPING PROFILE AND SECTION
G-5	PUMPING STATION - ABATEMENT/DEMO PLAN AND SECTION
G-6	PUMPING STATION - PLANS, SECTION AND DETAIL
G-7	INLET STRUCTURE - PLANS, SECTION AND DETAILS
G-8	MISCELLANEOUS DETAILS 1
G-9	MISCELLANEOUS DETAILS 2
G-10	EROSION AND SEDIMENT DETAILS 1
G-11	EROSION AND SEDIMENT DETAILS 2
S-1	CONCRETE SLAB PLAN AND DETAILS
E-1	ELECTRICAL LEGEND, ABBREVIATIONS AND GENERAL NOTES
E-2	SITE PLAN & POWER ONE-LINE DIAGRAM
E-3	DETAILS
E-4	DETAILS

Barton & Loguidice, D.P.C.

NY RISING

GOVERNOR'S OFFICE OF STORM RECOVERY (GOSR)

NO ALTERATION PERMITTED HEREON EXCEPT AS PROVIDED UNDER SECTION 7209 SUBDIVISION 2 OF THE NEW YORK STATE EDUCATION LAW.

PROJECT NO. 409.002

Plotted: Jun 10, 2016 – 9:14AM SYR By: rds
C:\Users\rds\appdata\local\temp\AcPublish_1428\409002 C01 Cover Sheet (ID 967888).dwg

GENERAL NOTES:

1. UNDERGROUND UTILITIES ARE APPROXIMATE IN LOCATION. CONTRACTOR SHALL VERIFY EXISTING UTILITY LOCATIONS THROUGH DIG SAFELY NY PRIOR TO EXCAVATION. THE CONTRACTOR SHALL CONFIRM LOCATION AND ELEVATION OF ALL CONNECTIONS AND CROSSINGS OF UTILITIES WITHIN 30 DAYS OF CONTRACT AWARD. ANY DAMAGE TO FACILITIES SHALL BE REPAIRED TO THE SATISFACTION OF THE ENGINEER AT THE CONTRACTOR'S EXPENSE.

2. UNLESS OTHERWISE NOTED ON THE PLANS, ALL EXISTING LANDSCAPE FEATURES LOCATED WITHIN OR OUTSIDE OF DESIGNATED RIGHT–OF–WAY OR EASEMENTS PROVIDED WHICH ARE DISTURBED OR DAMAGED BY THE CONTRACTOR DURING CONSTRUCTION, (INCLUDING BUT NOT LIMITED TO, CULVERT PIPES, SWALES, TREES, SHRUBS, BUSHES, PLANTERS, MAILBOXES, SIGNS, ASPHALT DRIVES, CONCRETE DRIVES, GRAVEL DRIVES, FENCES AND WALKWAYS) SHALL BE RESTORED AND/OR REPLACED IN KIND, SIZE, MATERIAL AND TYPE AS APPLICABLE, BY THE CONTRACTOR AT NO ADDITIONAL COST TO THE OWNER. CONTRACTOR SHALL SAWCUT ASPHALT AND CONCRETE PAVEMENT AT ROAD OR DRIVEWAY CROSSINGS, UNLESS OTHERWISE SPECIFIED.

3. THE CONTRACTOR SHALL BE RESPONSIBLE FOR RESTORING ANY SURVEY OR RIGHT–OF–WAY MONUMENTS DISTURBED DURING CONSTRUCTION. THE CONTRACTOR SHALL EMPLOY A LICENSED LAND SURVEYOR TO RESTORE ALL DISTURBED MONUMENTS TO THEIR ORIGINAL LOCATION.

4. THE CONTRACTOR SHALL FAMILIARIZE HIM/HER SELF WITH SITE CONDITIONS AND SHALL INCLUDE PROVISIONS TO AVOID CONFLICTS WITH AND/OR RESTORE SITE FEATURES IN THE BID. NO SEPARATE OR ADDITIONAL PAYMENT WILL BE MADE FOR WORK REQUIRED TO AVOID CONFLICTS WITH EXISTING SURFACE FEATURES OR RESTORE THOSE WHICH ARE NOT SHOWN.

5. VERTICAL FITTINGS ARE NOT SHOWN OR CALLED OUT ON THE DRAWINGS. THE CONTRACTOR SHALL FURNISH AND INSTALL ALL REQUIRED FITTINGS TO CONSTRUCT THE PROJECT AS SHOWN ON THE DRAWINGS AND IN ACCORDANCE WITH APPLICABLE STANDARDS.

6. RESTORE ALL SURFACES TO AS GOOD AS OR BETTER CONDITION THAN BEFORE CONSTRUCTION AS SOON AS POSSIBLE FOLLOWING COMPLETION OF WORK IN ANY AREA.

7. INVERT ELEVATIONS AT CULVERT CROSSINGS AND SWALE/DITCH ALIGNMENTS ARE APPROXIMATE. CONTRACTOR SHALL FIELD VERIFY ELEVATIONS AND LOCATIONS OF ALL ROADWAY/DRIVEWAY CULVERTS AND SWALES/DITCHES WITHIN THE AREA OF WORK PRIOR TO CONSTRUCTION. CONTRACTOR SHALL RESTORE ALL DISTURBED CULVERTS AND SWALES TO THE PRE–CONSTRUCTION ELEVATIONS/ALIGNMENTS.

8. ALL TRENCHES BENEATH ROADWAYS, DRIVEWAYS AND OTHER AREAS OF VEHICULAR EGRESS SHALL BE BACKFILLED TO SURFACE RESTORATION SUBGRADE ABOVE PIPE LINING WITH SPECIAL BACKFILL.

9. ALL HIGHWAY SIGNS ARE TO BE ASSUMED TO BE IN GOOD CONDITION. ANY SIGN DAMAGED IN ANY WAY, SHAPE OR FORM DURING CONSTRUCTION WILL BE THE RESPONSIBILITY OF THE CONTRACTOR. ALL DAMAGED SIGNS SHALL BE REPLACED IN KIND.

10. ALL DISCHARGE PIPING SHOWN ON THE DRAWINGS SHALL BE CLASS 50 DUCTILE IRON PIPE (D.I.) WITH POLYETHYLENE ENCASEMENT, UNLESS OTHERWISE SHOWN.

11. THE CONTRACTOR SHALL BE RESPONSIBLE FOR MAINTAINING AND RESTORING ACCESS TO THEIR APPLICABLE WORK AREAS THROUGHOUT THE CONSTRUCTION PERIOD.

12. THE CONTRACTOR SHALL MAINTAIN A MINIMUM HORIZONTAL SEPARATION OF 10 FEET OR A MINIMUM VERTICAL SEPARATION OF 18 INCHES BETWEEN OUTSIDE WALLS OF SANITARY SEWER AND WATER MAINS UNLESS OTHERWISE SHOWN ON THE PLANS.

13. ALL HORIZONTAL AND VERTICAL FITTINGS TO BE RESTRAINED USING THRUST BLOCKS. THE CONTRACTOR MAY ALSO INSTALL MECHANICAL JOINT RESTRAINT HOWEVER, INSTALLING JOINT RESTRAINT DOES NOT ALLEVIATE THE CONTRACTOR'S RESPONSIBILITY TO INSTALL THRUST BLOCKS AND NO ADDITIONAL PAYMENT WILL BE MADE. FOR TYPICAL DIMENSIONS OF THE THRUST BLOCKS SEE TABLE, SHEET G–8.

14. AT ALL WATER MAIN RELOCATIONS, WATER MAIN INSTALLATION SHALL BE BELOW THE EXISTING CULVERT UNLESS OTHERWISE SHOWN ON THE PLANS OR APPROVED BY THE ENGINEER. ALL WATER MAIN RELOCATIONS SHALL BE COORDINATED WITH THE TOWN OF VESTAL WATER DEPARTMENT.

15. ALL EXISTING WELLS AND EXISTING PUBLIC MAINS/SERVICES SHALL BE PROTECTED WHILE NEW WATER MAIN AND SERVICES ARE BEING INSTALLED. CONTRACTOR SHALL IMMEDIATELY REPAIR AND RETURN TO SERVICE ANY EXISTING WELLS OR PUBLIC MAINS/SERVICES THAT ARE DAMAGED AT NO ADDITIONAL COST TO THE OWNER.

16. THE CONTRACTOR IS RESPONSIBLE FOR FIELD VERIFYING ALL EXISTING UTILITY DEPTH, MATERIAL, SIZE AND CONFIGURATION AT ALL CONNECTIONS. THE COST FOR FIELD VERIFYING SHALL BE INCLUDED IN THE BID PRICE FOR THE APPROPRIATE CONNECTION BE ITEM.

17. PROVIDE THREE (3) TIES MINIMUM TO ALL FITTINGS AND VALVES FOR AS–BUILTS. TIES SHALL BE TAKEN FROM CORNERS. DISTANCE FROM CENTERLINE OF PAVEMENT MAY BE UTILIZED AS THIRD DIMENSION. RECORD DEPTH OF COVER MEASUREMENTS ON AS–BUILT DRAWINGS WHERE DEPTH OF COVER DEVIATES FROM THAT SHOWN ON CONTRACT DRAWINGS.

18. THE CONTRACTOR SHALL TAKE CARE NOT TO UNDERMINE ROADWAY PAVEMENT. ANY DISTURBED OR UNDERMINED PAVEMENT SHALL BE REPLACED AT NO ADDITIONAL COST TO THE OWNER.

19. CONTRACTOR TO PROVIDE FULL TIME ACCESS ALONG ROADWAYS AND DRIVEWAYS TO ALL BUSINESSES AND RESIDENTS AT THE END OF EACH WORKING DAY.

20. THE CONTRACTOR SHALL NOT CLEAR ANY TREES 3" IN DIAMETER OR GREATER BETWEEN APRIL 1 AND OCTOBER 30 DUE TO THE POTENTIAL PRESENCE OF NORTHERN LONG EARED BAT HABITAT IN THE PROJECT AREA.

21. THE CONTRACTOR SHALL BE RESPONSIBLE FOR REPAIRING ANY SETTLING OF LAWN AREAS, SIDEWALKS, DRIVEWAYS, ROADWAY OR ANY OTHER AREAS OF DISTURBANCE UNTIL CONTRACT ACCEPTANCE.

22. ROAD TO BE KEPT CLEAN OF MUD AND DEBRIS AT ALL TIMES.

23. ROADSIDE DRAINAGE SHALL BE MAINTAINED AT ALL TIMES.

24. THE CONTRACTOR SHALL MAINTAIN TRAFFIC THROUGHOUT THE LENGTH AND DURATION OF THE CONTRACT IN ACCORDANCE WITH THE REQUIREMENTS OF SECTION 619 OF THE STANDARD SPECIFICATIONS AS TRANSMITTED BY EI 07–006, 2009 NATIONAL MUTCD AND NEW YORK STATE SUPPLEMENTS (ADOPTED RULE AND PROPOSED RULE), STANDARD SPECIFICATION 729 AS PROVIDED BY EI 07–001, STANDARD SPECIFICATION 730 AS PROVIDED BY EI 07–004, STANDARD SPECIFICATION 704–05 AS PROVIDED BY EI 07–005, AND THE WORK ZONE TRAFFIC CONTROL DETAILS IN THE PLANS AND PROPOSAL OR AOBE.

25. NOTIFY DIG SAFELY NEW YORK TWO (2) WORKING DAYS PRIOR TO DIGGING, DRILLING OR BLASTING AT 1–800–962–7962 FOR A UTILITY STAKE–OUT.

26. CONTRACTOR SHALL FURNISH AND APPLY WATER FOR DUST CONTROL AS NEEDED. NO SEPARATE PAYMENT SHALL BE MADE FOR DUST CONTROL.

PROPOSED LEGEND:

ST	STORM PIPE (SIZE/MATERIAL AS NOTED)
690	CONTOUR MAJOR (5FT)
691	CONTOUR MINOR (1FT)
	INLET STRUCTURE
	DRAINAGE STRUCTURE
	AIR/VACUUM RELEASE MAHNOLE

ANNOTATION SYMBOLS

1 / G–XX — UPPER NUMBER DISPLAYS SECTION NUMBER; LOWER LETTER/NUMBER DISPLAYS SHEET WHERE SECTION IS SHOWN — SECTION MARKER

1 / G–XX — SECTION — SCALE: X/X" = 1'–0" — UPPER NUMBER DISPLAYS SECTION NUMBER; LOWER LETTER/NUMBER DISPLAYS SHEET WHERE SECTION WAS TAKEN — SECTION TITLE

SURVEY NOTES:

SURVEY PERFORMED BY SHUMAKER CONSULTING ENGINEERING & LAND SURVEYING, D.P.C. DATED SEPTEMBER, 2015 AND UPDATED FEBRUARY, 2016.

1. HORIZONTAL DATUM IS REFERENCED TO THE NEW YORK STATE PLANE COORDINATE SYSTEM NAD 83 CENTRAL ZONE.

2. VERTICAL DATUM IS REFERENCED TO NAVD 88.

3. THE LOCATION OF THE UNDERGROUND UTILITY LINES SHOWN ARE TO QUALITY LEVEL C AS STATED IN SECTION 38–02 PAGE 6 OF THE ASCE "STANDARD GUIDELINE FOR THE COLLECTION AND DEPICTION OF EXISTING SUBSURFACE UTILITY DATA". THERE IS NO GUARANTEE THAT ALL THE EXISTING UTILITIES, WHETHER FUNCTIONAL OR ABANDONED WITHIN THE PROJECT LIMITS ARE SHOWN ON THIS DRAWING. THE CONTRACTOR SHALL DETERMINE THE EXACT LOCATION OF ALL UNDERGROUND UTILITIES BEFORE STARTING WORK AND SHALL BE RESPONSIBLE FOR ALL DAMAGE RESULTING FROM THIS WORK. BEFORE COMMENCING WORK CONTACT "DIG SAFELY NEW YORK" AT 1–800–962–7962 AND PROVIDE 72 HOURS NOTICE.

EXISTING LEGEND:

ST	STORM PIPE (SIZE/MATERIAL AS NOTED)
W	WATER PIPE (SIZE AS NOTED)
SA	SANITARY PIPE (SIZE/MATERIAL AS NOTED)
G	GAS PIPE
OH	OVERHEAD WIRE
UE	UNDERGROUND ELECTRIC
℄	CENTERLINE OF ROAD
	BOX BEAM GUIDE RAIL
825	CONTOUR MAJOR (5FT)
	CONTOUR MINOR (1FT)
	BRUSH
	WOODED
F.H.	HYDRANT ASSEMBLY
W.V.	GATE VALVE W/ VALVE BOX
UP# NYSEG 7204 VZ4	UTILITY POLE
SMH–11374 S	SANITARY MANHOLE
	CONIFEROUS TREE
	DECIDUOUS TREE
	BUILDING/SHED
	ASPHALT
	GRAVEL

NO ALTERATION PERMITTED HEREON EXCEPT AS PROVIDED UNDER SECTION 7209 SUBDIVISION 2 OF THE NEW YORK STATE EDUCATION LAW.

COMPLETED CONSTRUCTION

Significant Construction Changes Are Shown

By _____ Date _____

Ck'd _____ Date _____

REVISIONS

TOWN OF VESTAL

ROBERT STREET STORMWATER PUMPING STATION
CONTRACT 1A – GENERAL CONSTRUCTION

LEGEND AND GENERAL NOTES

BROOME COUNTY, NEW YORK

TOWN OF VESTAL

Barton & Loguidice, D.P.C.

75% SUBMISSION

NOT FOR CONSTRUCTION
6/10/16

Date
JUNE 10, 2016

Scale
AS SHOWN

Sheet Number
G–1

Project Number
409.002

Plotted: Jun 10, 2016 – 9:15AM SYR By: rdo
Z:\BL–Vault\02\16217A02–1C71–4823–8927–99D5C4054147\0\967000–967999\967891\L\L\409002 G01 Legend and Gen Notes (ID 967891).dwg

Checked by _____ INITIALS _____ Drawn by _____ GRR _____ Designed by _____ RDO _____ In charge of _____ INITIALS _____

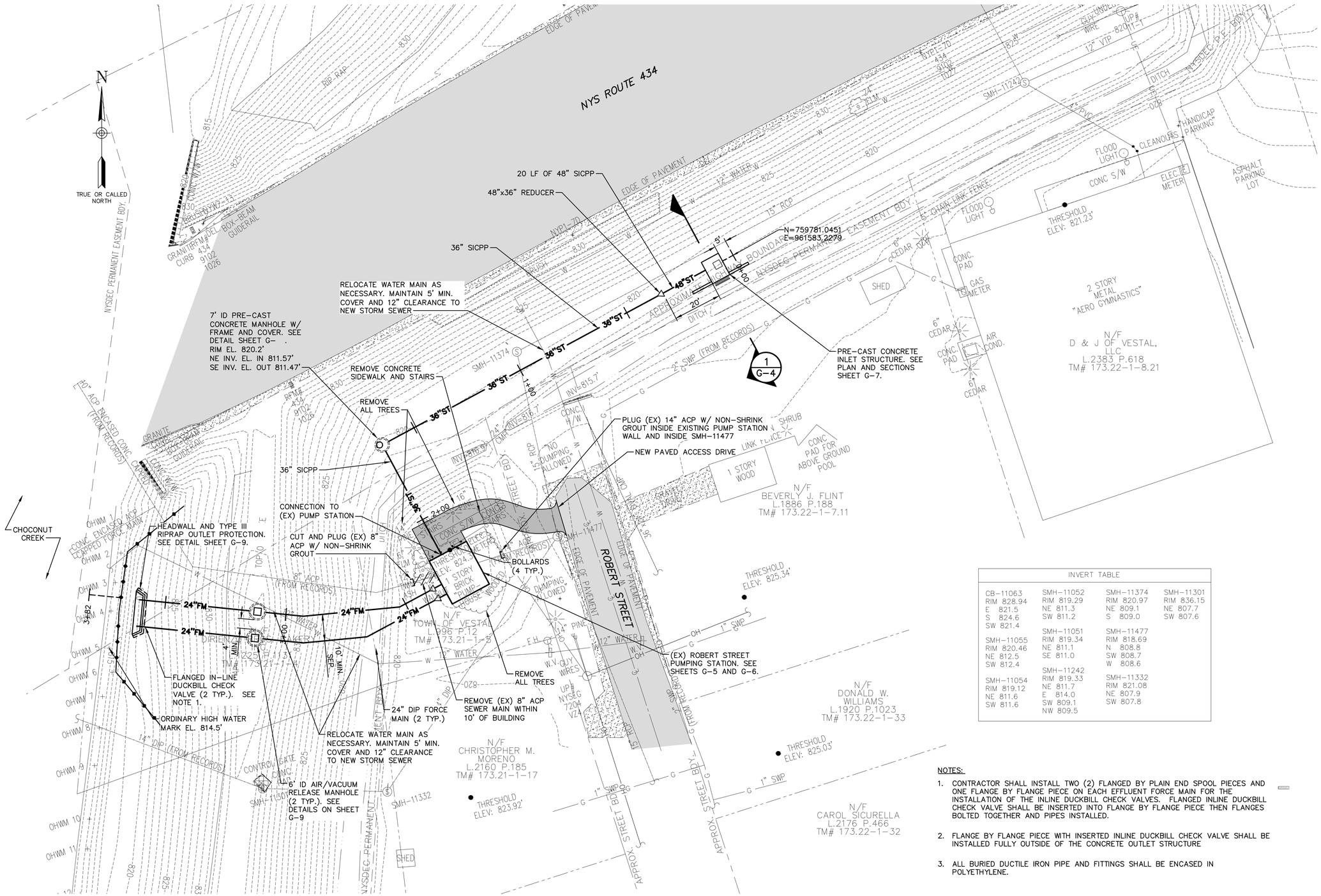

INVERT TABLE			
CB-11063 RIM 828.94 E 821.5 S 824.6 SW 821.4	SMH-11052 RIM 819.29 NE 811.3 SW 811.2	SMH-11374 RIM 820.97 NE 809.1 S 809.0	SMH-11301 RIM 836.15 NE 807.7 SW 807.6
SMH-11055 RIM 820.46 NE 812.5 SW 812.4	SMH-11051 RIM 819.34 NE 811.1 SE 811.0	SMH-11477 RIM 818.69 N 808.8 SW 808.7 W 808.6	
SMH-11054 RIM 819.12 NE 811.6 SW 811.6	SMH-11242 RIM 819.33 NE 811.7 E 814.0 SW 809.1 NW 809.5	SMH-11332 RIM 821.08 NE 807.9 SW 807.8	

NOTES:

1. CONTRACTOR SHALL INSTALL TWO (2) FLANGED BY PLAIN END SPOOL PIECES AND ONE FLANGE BY FLANGE PIECE ON EACH EFFLUENT FORCE MAIN FOR THE INSTALLATION OF THE INLINE DUCKBILL CHECK VALVES. FLANGED INLINE DUCKBILL CHECK VALVE SHALL BE INSERTED INTO FLANGE BY FLANGE PIECE THEN FLANGES BOLTED TOGETHER AND PIPES INSTALLED.
2. FLANGE BY FLANGE PIECE WITH INSERTED INLINE DUCKBILL CHECK VALVE SHALL BE INSTALLED FULLY OUTSIDE OF THE CONCRETE OUTLET STRUCTURE
3. ALL BURIED DUCTILE IRON PIPE AND FITTINGS SHALL BE ENCASED IN POLYETHYLENE.

SITE AND YARD PIPING PLAN

SCALE: 1" = 20'-0"

1"=20' 20' 0 20' 40'

Plotted: Jun 09, 2016 - 5:13PM SYR By: rds
Z:\BL-Vault\D2\16217A02-1C71-4823-8927-99905405417D\367000-367999\367005\LV\409002 G02-G04 Plans and Profile (ID 367005).dwg
Checked by INITIALS Drawn by GRR Designed by RDO In charge of INITIALS

NO ALTERATION PERMITTED HEREON EXCEPT AS PROVIDED UNDER SECTION 7209 SUBDIVISION 2 OF THE NEW YORK STATE EDUCATION LAW.

COMPLETED CONSTRUCTION

Significant Construction Changes Are Shown

By _____ Date _____
Ck'd _____ Date _____

REVISIONS

TOWN OF VESTAL
ROBERT STREET STORMWATER PUMPING STATION
CONTRACT 1A – GENERAL CONSTRUCTION
SITE AND YARD PIPING PLAN
BROOME COUNTY, NEW YORK
TOWN OF VESTAL

Barton & Loguidice, D.P.C.

75% SUBMISSION

NOT FOR CONSTRUCTION 6/10/16

Date JUNE 10, 2016

Scale AS SHOWN

Sheet Number G-2

Project Number 409.002

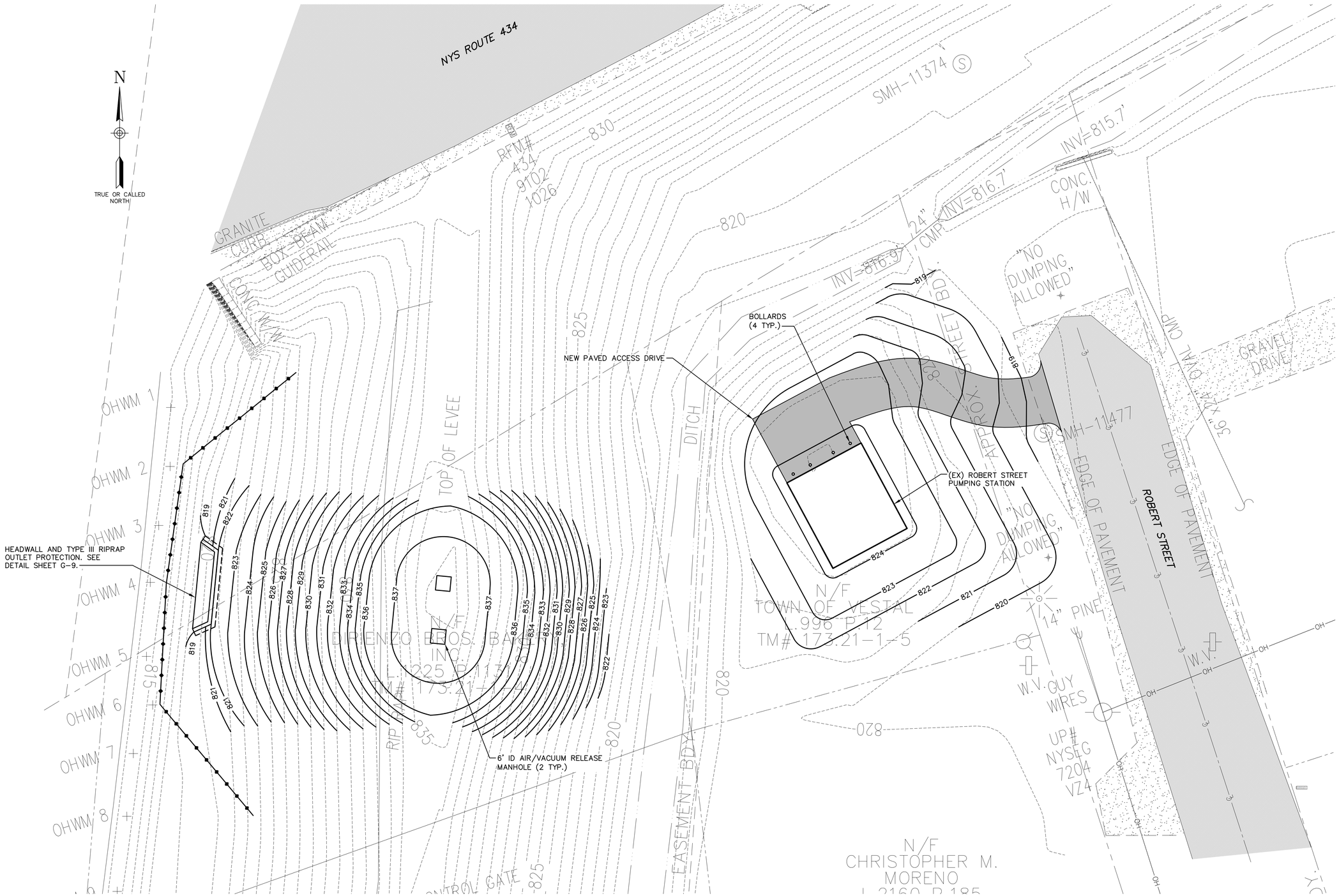

GRADING PLAN

SCALE: 1" = 10'-0"

1"=10' 10' 0 10' 20'

NO ALTERATION PERMITTED HEREON EXCEPT AS PROVIDED UNDER SECTION 7209 SUBDIVISION 2 OF THE NEW YORK STATE EDUCATION LAW.

COMPLETED CONSTRUCTION

Significant Construction Changes Are Shown

By _____ Date _____

Ck'd _____ Date _____

REVISIONS

TOWN OF VESTAL

ROBERT STREET STORMWATER PUMPING STATION
CONTRACT 1A – GENERAL CONSTRUCTION

SITE GRADING PLAN

BROOME COUNTY, NEW YORK

TOWN OF VESTAL

Barton & Loguidice, D.P.C.

75% SUBMISSION

NOT FOR CONSTRUCTION
6/10/16

Date
JUNE 10, 2016

Scale
AS SHOWN

Sheet Number
G-3

Project Number
409.002

Plotted: Jun 09, 2016 – 5:13PM SYR By: rdo
Z:\BL-Vault\02\16217A02-1C71-4823-8927-99905405447\0\967000-967999\967005\W\409002 G02-G04 Plans and Profile (ID 967005).dwg

Checked by ___INITIALS___ Drawn by ___GRR___ Designed by ___RDO___ In charge of ___INITIALS___

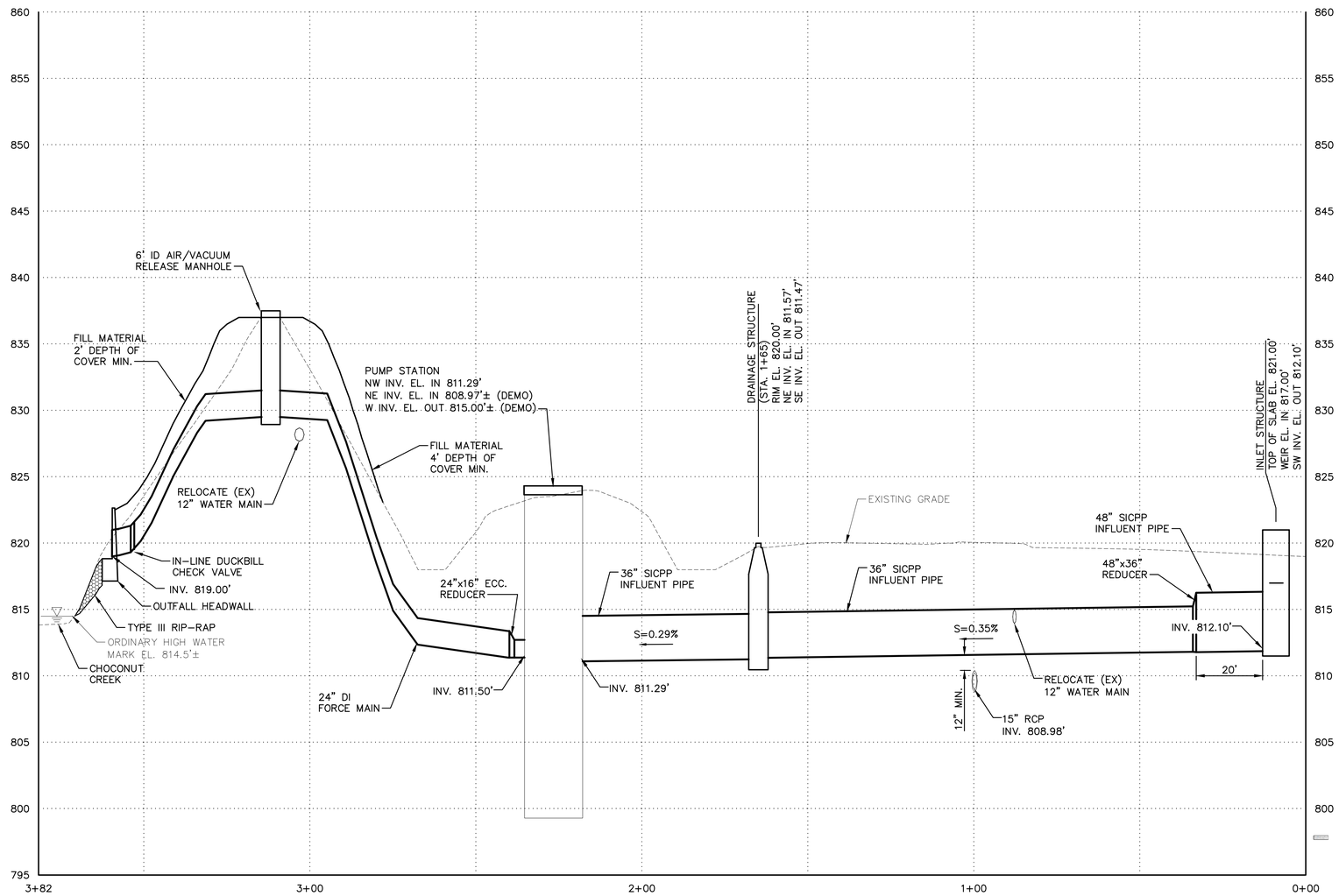

YARD PIPING PROFILE

HORIZONTAL SCALE: 1" = 20'-0"
VERTICAL SCALE: 1" = 5'-0"

NOTE:

1. VERTICAL OFFSETS AS NECESSARY TO MAINTAIN PROFILE OF 24" DI FORCE MAIN SHALL BE ACCOMPLISHED BY THE USE OF ROLLED FITTINGS AS NECESSARY.

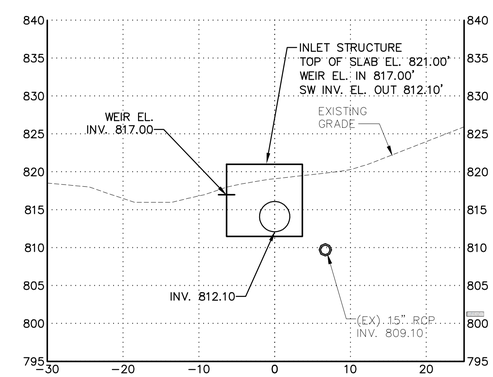

1 G-2 SECTION
HORIZONTAL SCALE: 1" = 10'-0"
VERTICAL SCALE: 1" = 10'-0"

1"=10' 10' 0 10' 20'
1"=20' 20' 0 20' 40'
1"=5' 5' 0 5' 10'

Plotted: Jun 10, 2016 – 9:16AM SYR By: rdo
Z:\BL-Vault\02\827A02-1C71-4823-8927-99B5C4054147\0\967000-967999\967005\L\L\409002 G02-G04 Plans and Profile (ID 967005).dwg

Checked by INITIALS Drawn by GRR Designed by RDO In charge of INITIALS

NO ALTERATION PERMITTED HEREON EXCEPT AS PROVIDED UNDER SECTION 7209 SUBDIVISION 2 OF THE NEW YORK STATE EDUCATION LAW.

COMPLETED CONSTRUCTION

Significant Construction Changes Are Shown

By _____ Date _____
Ck'd _____ Date _____

REVISIONS

TOWN OF VESTAL
ROBERT STREET STORMWATER PUMPING STATION
CONTRACT 1A – GENERAL CONSTRUCTION

YARD PIPING PROFILE AND SECTION

BROOME COUNTY, NEW YORK

TOWN OF VESTAL

Barton & Loguidice, D.P.C.

75% SUBMISSION

NOT FOR CONSTRUCTION 6/10/16

Date
JUNE 10, 2016

Scale
AS SHOWN

Sheet Number
G-4

Project Number
409.002

ASBESTOS REMOVAL GENERAL NOTES:

A. THE CONTRACTOR SHALL BE RESPONSIBLE FOR THE COMPLETION OF THE ASBESTOS CONTAINING MATERIAL REMOVALS AS DEFINED IN THE CONTRACT DOCUMENTS. THE CONTRACTOR SHALL ALSO BE RESPONSIBLE FOR ALL MEANS, METHODS, COORDINATION, SUPERVISION, MANAGEMENT, AND SEQUENCING TO COMPLETE THE WORK. ADDITIONALLY, THE CONTRACTOR SHALL MAKE ALL EFFORTS TO COOPERATE WITH THE OTHER PROJECT CONTRACTORS. THE CONTRACTOR SHALL COORDINATE ALL BUILDING/ELECTRICAL/HVAC SHUTDOWNS AND ISOLATION WITH THE OWNER.

B.THE CONTRACTOR SHALL HOLD A CURRENT LICENSE IN THE STATE OF NEW YORK FOR ASBESTOS REMOVAL AND SHALL EMPLOY NYS DEPARTMENT OF LABOR CERTIFIED EMPLOYEES. SUFFICIENT STAFF SHALL BE PROVIDED TO COMPLETE THE ASBESTOS REMOVALS WITHIN THE SCHEDULED CONSTRUCTION PERIODS.

C. ASBESTOS MATERIAL REMOVAL AND DISPOSAL SHALL BE IN ACCORDANCE WITH THE PROCEDURES IDENTIFIED IN THE PROJECT MANUAL AND APPLICABLE LOCAL, STATE, AND FEDERAL REGULATIONS. CONTRACTOR, AT HIS OWN EXPENSE, MAY OBTAIN A SITE SPECIFIC VARIANCE FROM THE NYS DEPARTMENT OF LABOR.

D. CONTRACT DRAWINGS INDICATE THE EXTENT OF ASBESTOS REMOVAL AND ARE TO BE USED AS A GUIDELINE. CONTRACTOR SHALL REMOVE AND DISPOSE OF ASBESTOS CONTAINING MATERIALS ILLUSTRATED ON THE CONTRACT DRAWINGS AND LISTED IN THE SPECIFICATIONS.

E. CONTRACTOR SHALL COORDINATE PROPOSED DECONTAMINATION UNIT LOCATIONS, STAGING AREAS, AND WORK SITE ACCESS WITH BUILDING OWNER AND/OR THEIR REPRESENTATIVE.

F. THE CONTRACTOR SHALL BE RESPONSIBLE FOR REPLACEMENT OR REPAIR OF ANY DAMAGES TO THE BUILDING, BUILDING COMPONENTS, OR SYSTEMS NOT INCLUDED IN THIS SCOPE THAT ARE CONSEQUENTLY DAMAGED AS A RESULT OF THE CONTRACTORS WORK.

G. REFER TO SPECIFICATION SECTION 02080 AND ATTACHMENTS FOR ACM MATERIAL QUANTITIES.

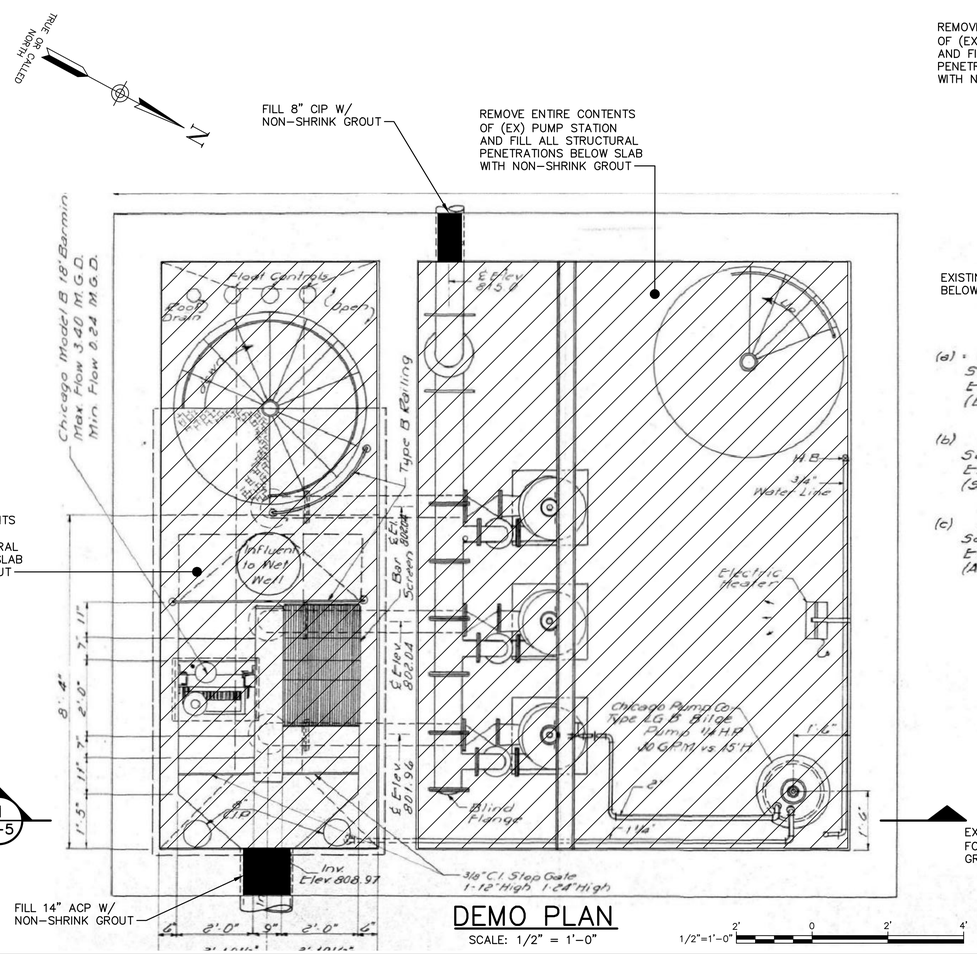

DEMO PLAN

SCALE: 1/2" = 1'-0"

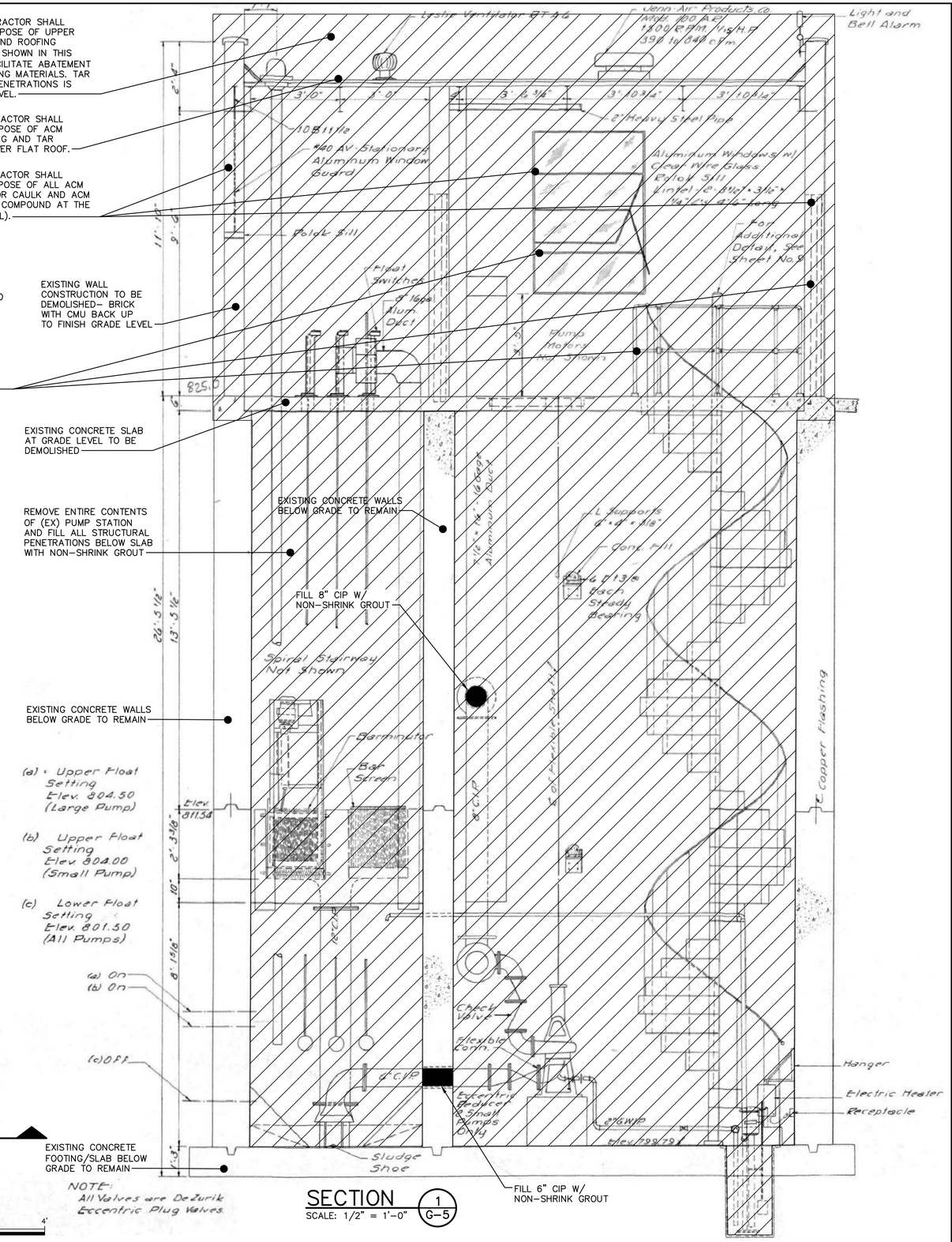

SECTION 1/G-5

SCALE: 1/2" = 1'-0"

NO ALTERATION PERMITTED HEREON EXCEPT AS PROVIDED UNDER SECTION 7209 SUBDIVISION 2 OF THE NEW YORK STATE EDUCATION LAW.

COMPLETED CONSTRUCTION

Significant Construction Changes Are Shown

By _____ Date _____

Ck'd _____ Date _____

REVISIONS

TOWN OF VESTAL

ROBERT STREET STORMWATER PUMPING STATION
CONTRACT 1A – GENERAL CONSTRUCTION

PUMPING STATION – ABATEMENT/DEMO PLAN AND SECTION

TOWN OF VESTAL

BROOME COUNTY, NEW YORK

Barton & Loguidice, D.P.C.

75% SUBMISSION

NOT FOR CONSTRUCTION 6/10/16

Date JUNE 10, 2016

Scale AS SHOWN

Sheet Number G-5

Project Number 409.002

Plotted: Jun 09, 2016 – 5:14PM S\R By: rdo
Z:\BL-Vault\02\19217A02-1C71-4823-8927-99D5C405147\0\967000-967999\967668\L\L\409002 G05-G06 Pump Station Plan and Sections (ID 967668).dwg
Checked by INITIALS Drawn by GRR Designed by RDO In charge of INITIALS

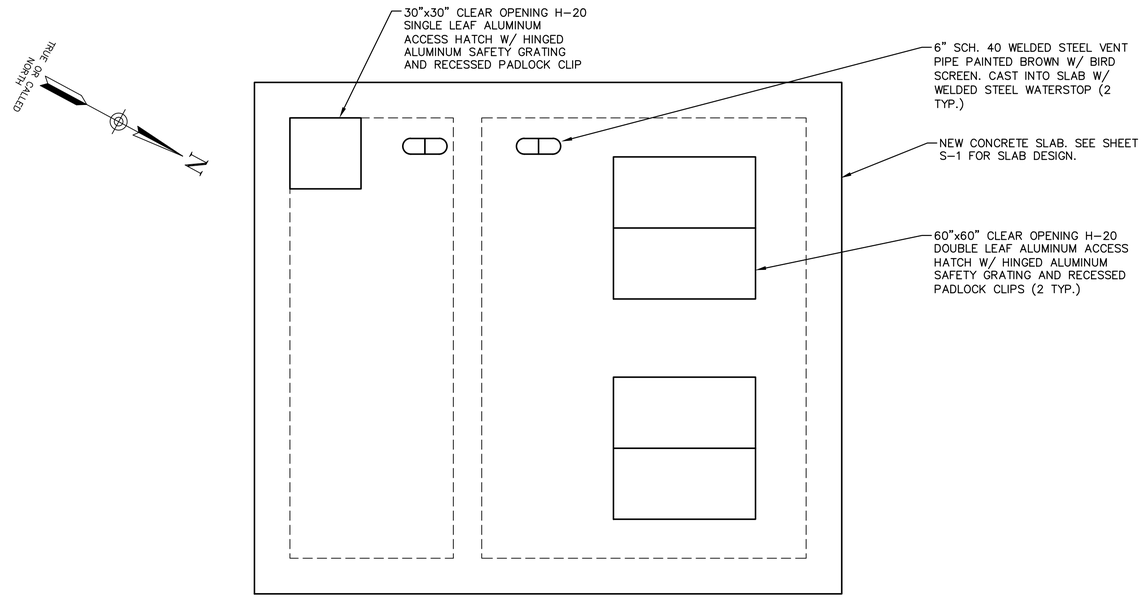

TOP SLAB PLAN

SCALE: 3/8" = 1'-0"

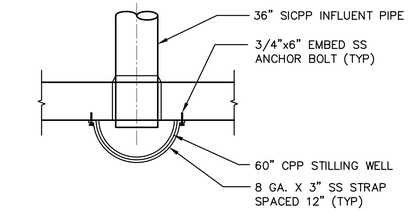

STILLING WELL – DETAIL

NOT TO SCALE

NOTES:

1. ALL STAINLESS STEEL (S.S.) SHALL BE TYPE 304.
2. ALL BURIED FITTINGS SHALL HAVE RESTRAINED MECHANICAL JOINTS.
3. ALL BURIED DUCTILE IRON PIPE AND FITTINGS SHALL BE ENCASED IN POLYETHYLENE.
4. NEW SUMP PUMP SHALL HAVE AN OPERATING POINT OF 65 GPM AT 28-FEET TDH. NEW SUMP PUMP SHALL FIT IN EXISTING PUMP PIT AND SHALL HAVE A NEW 2-INCH SCH. 40 PVC DISCHARGE LINE. PVC DISCHARGE SHALL DAYLIGHT TO GRADE AT EL. 818.00' IN LOCATION SHOWN ON SITE PLAN. SUMP PUMP SHALL BE ZOELLER MODEL 161/4161, OR APPROVED EQUAL.

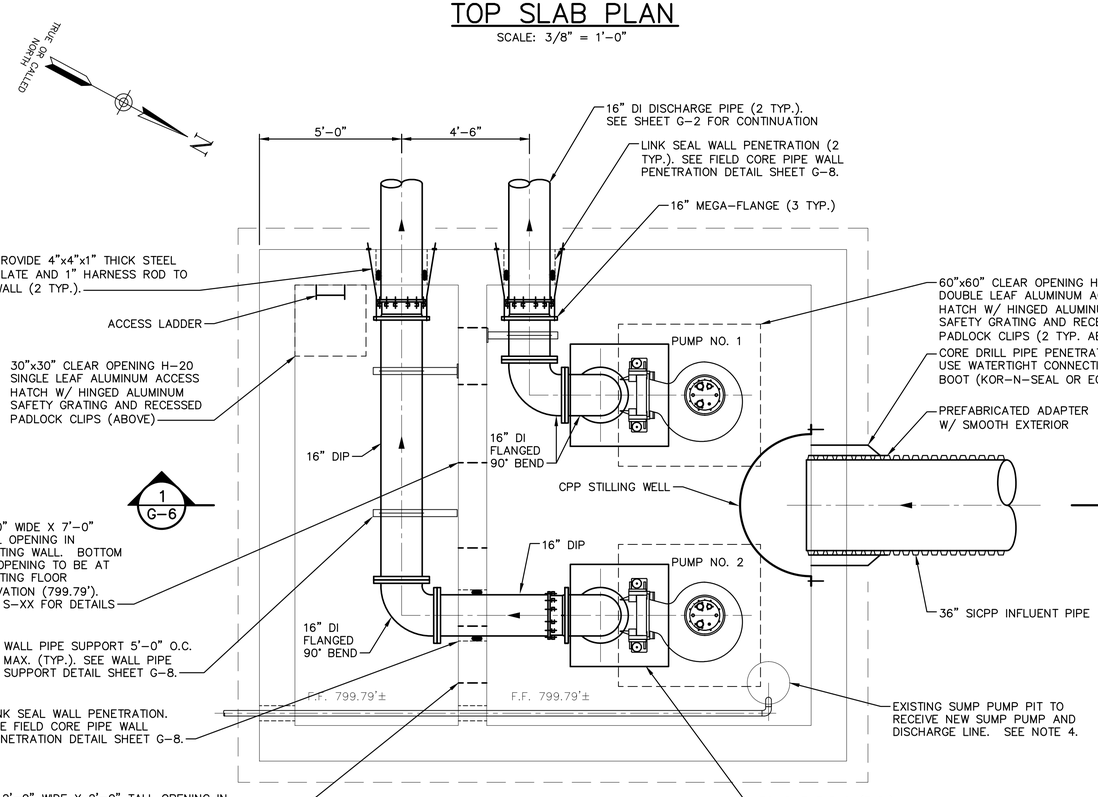

PLAN

SCALE: 3/8" = 1'-0"

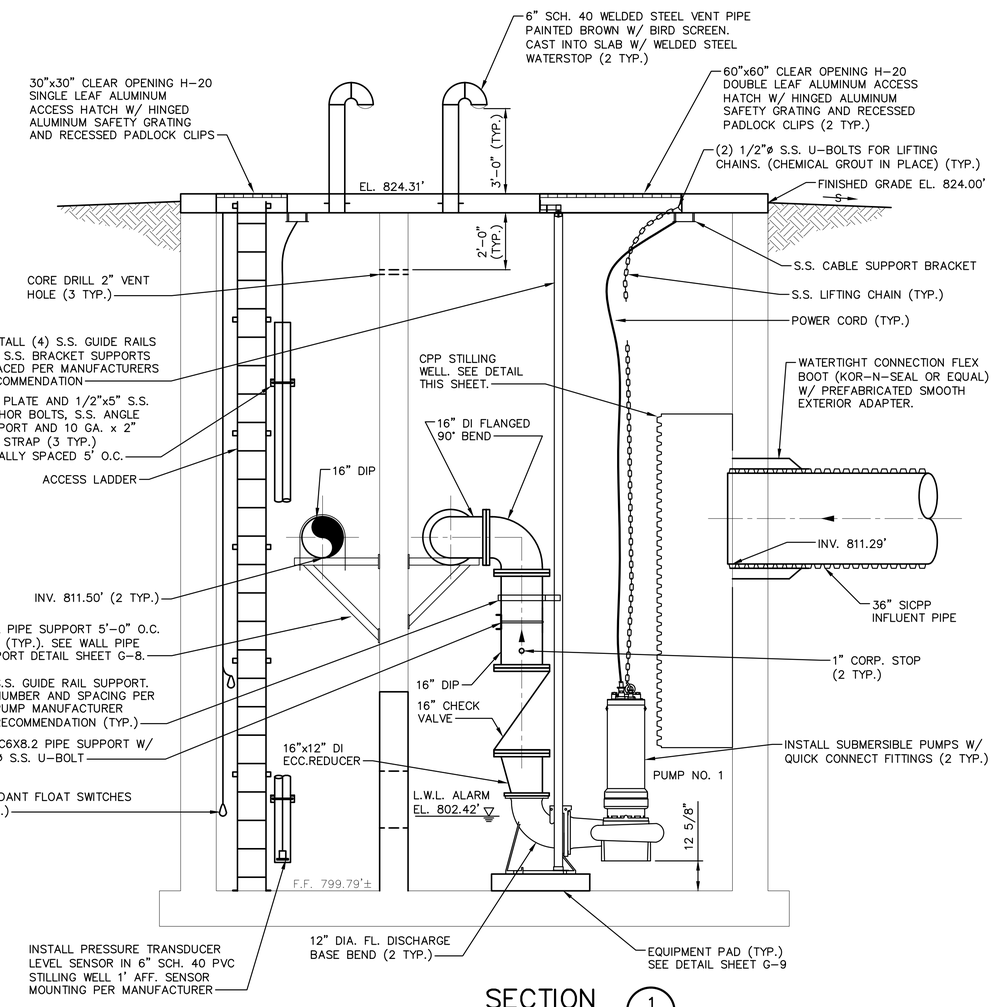

SECTION 1/G-6

SCALE: 3/8" = 1'-0"

3/8"=1'-0" 2' 0 3' 6'

NO ALTERATION PERMITTED HEREON EXCEPT AS PROVIDED UNDER SECTION 7209 SUBDIVISION 2 OF THE NEW YORK STATE EDUCATION LAW.

COMPLETED CONSTRUCTION

Significant Construction Changes Are Shown

By _____ Date _____

Ck'd _____ Date _____

REVISIONS

TOWN OF VESTAL

ROBERT STREET STORMWATER PUMPING STATION
CONTRACT 1A – GENERAL CONSTRUCTION

PUMPING STATION – PLANS, SECTION AND DETAIL

BROOME COUNTY, NEW YORK

TOWN OF VESTAL

Barton & Loguidice, D.P.C.

75% SUBMISSION

NOT FOR CONSTRUCTION 6/10/16

Date JUNE 10, 2016

Scale AS SHOWN

Sheet Number G-6

Project Number 409.002

Plotted: Jun 10, 2016 – 9:17AM SYR By: rdo
Z:\BL-Vault\D2\18217A02-1C71-4823-8927-99D5C4D54147\D\967000-967999\967668\L\L\409002 G05-G06 Pump Station Plan and Sections (ID 967668).dwg
Checked by INITIALS Drawn by GRR Designed by RDO In charge of INITIALS

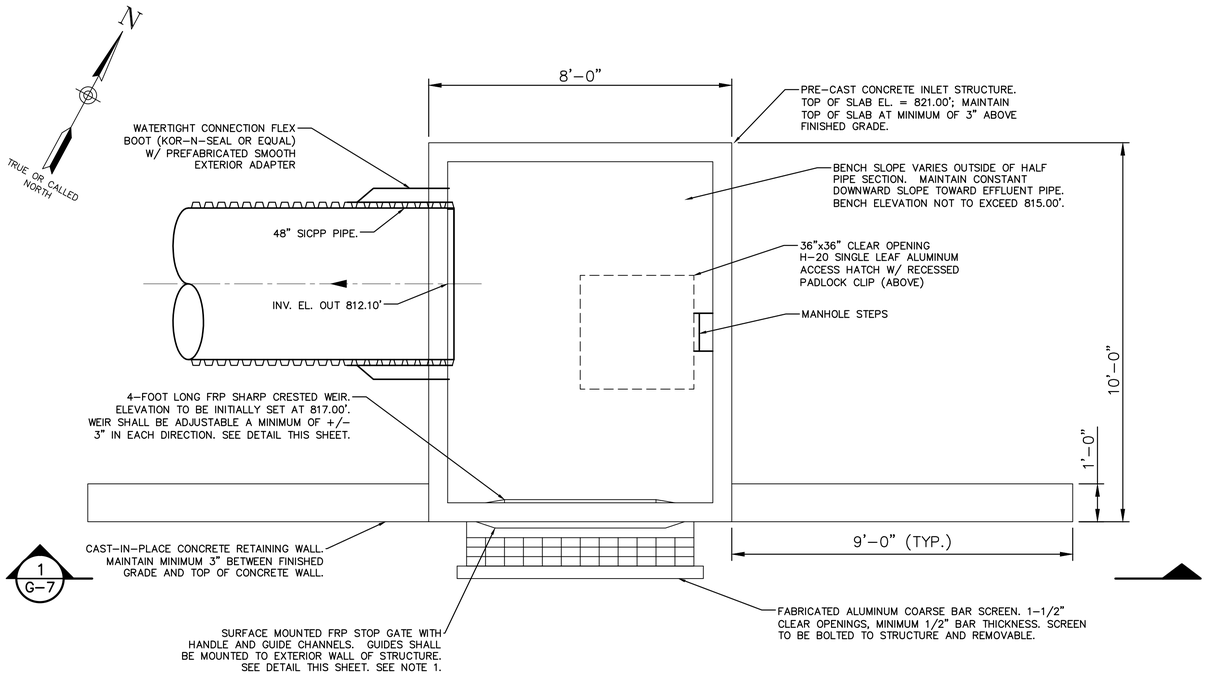

INLET STRUCTURE PLAN

SCALE: 1/2" = 1'-0"

NOTE:

1. CONTRACTOR SHALL COORDINATE SIZE OF FABRICATED BAR SCREEN WITH FRP STOP GATE MANUFACTURER. FIRST OPENING OF BAR SCREEN ON TOP SIDE AND ADJACENT TO CONCRETE STRUCTURE SHALL BE SIZED TO FACILITATE PLACEMENT AND REMOVAL OF FRP STOP GATE.

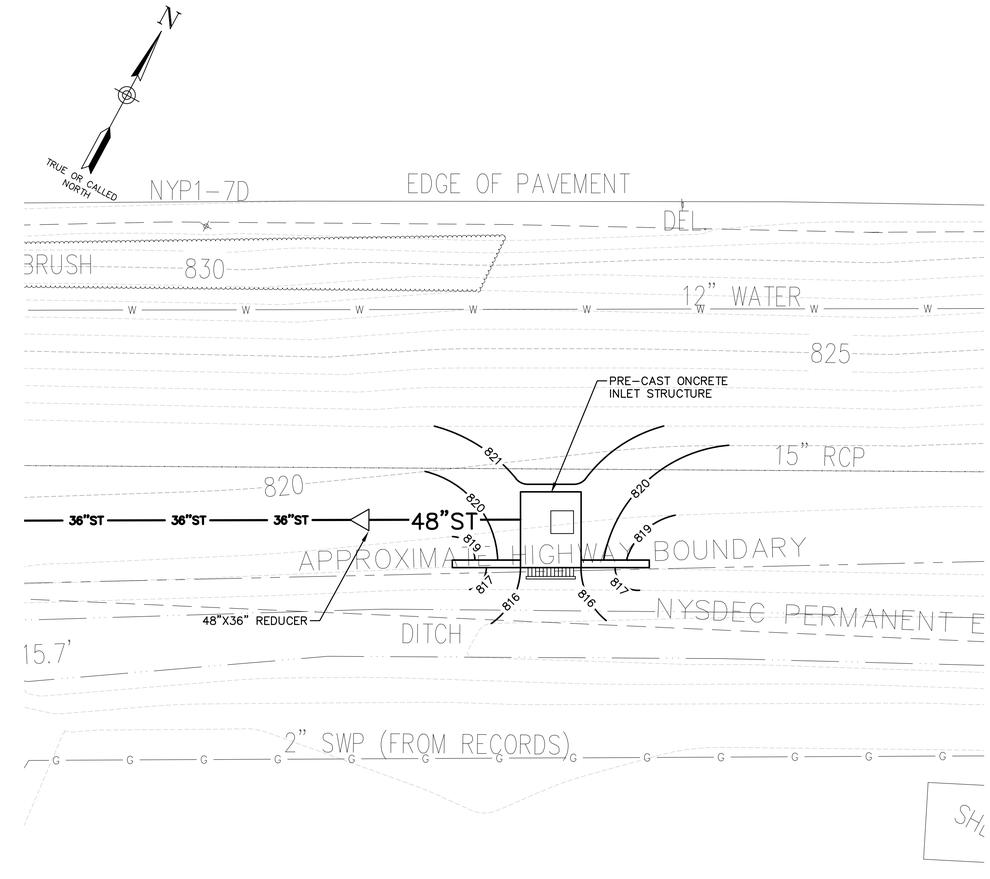

INLET STRUCTURE GRADING PLAN

SCALE: 1/2" = 1'-0"

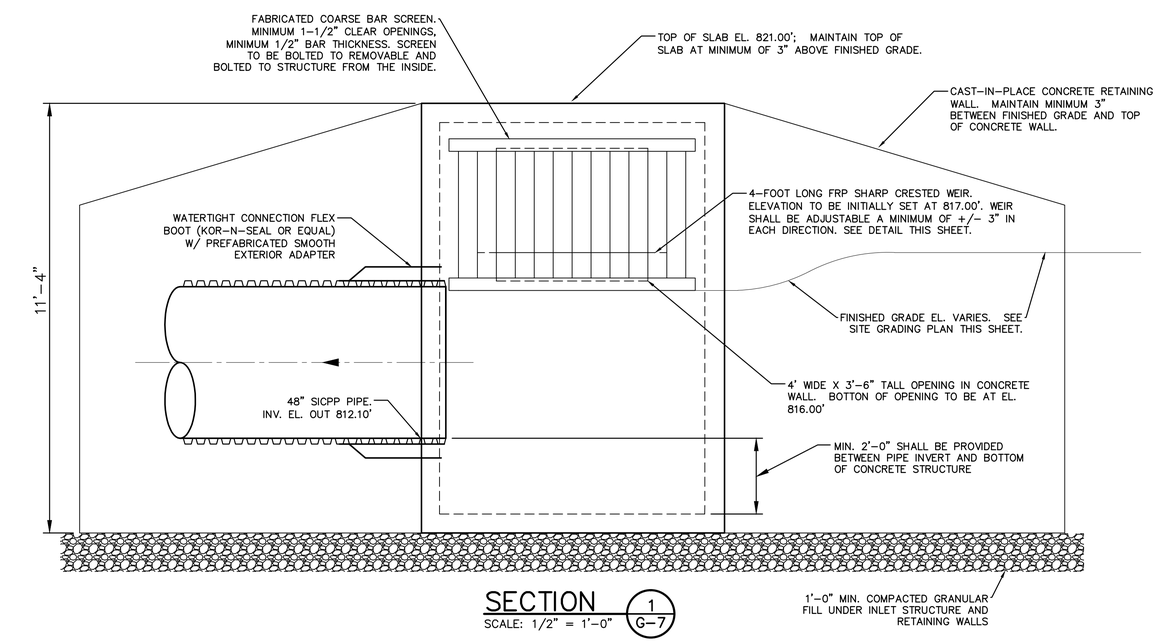

SECTION

SCALE: 1/2" = 1'-0"

1
G-7

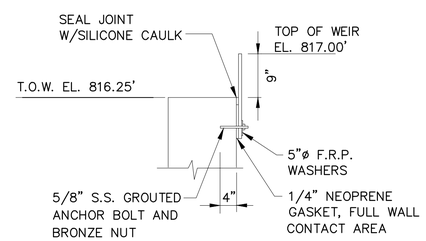

ADJUSTABLE OVERFLOW WEIR PLATE DETAIL

NOT TO SCALE

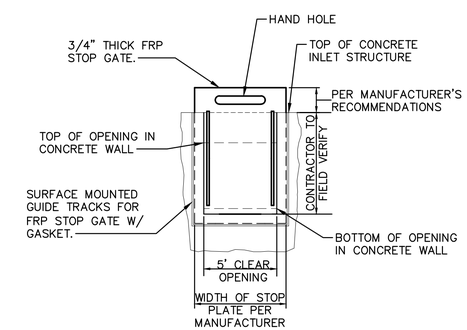

ADJUSTABLE FRP STOP GATE DETAIL

NOT TO SCALE

NOTES:

1. SURFACE MOUNTED GUIDE TRACKS SHALL BE MOUNTED ON EXTERIOR FACE OF CONCRETE INLET STRUCTURE AND SHALL BE PROVIDED BY FRP STOP GATE MANUFACTURER
2. CONTRACTOR TO COORDINATE MOUNTING AND PLACEMENT LOCATION OF GUIDE TRACKS WITH STOP GATE MANUFACTURER.
3. CONTRACTOR SHALL COORDINATE NEW GATE THICKNESS AND DIMENSIONS WITH PROPOSED INLET STRUCTURE AND BAR SCREEN MANUFACTURER.

1"=10' 10' 0 10' 20'

1/2"=1'-0" 2' 0 2' 4'

NO ALTERATION PERMITTED HEREON EXCEPT AS PROVIDED UNDER SECTION 7209 SUBDIVISION 2 OF THE NEW YORK STATE EDUCATION LAW.

COMPLETED CONSTRUCTION

Significant Construction Changes Are Shown

By _____ Date _____

Ck'd _____ Date _____

REVISIONS

TOWN OF VESTAL

ROBERT STREET STORMWATER PUMPING STATION
CONTRACT 1A – GENERAL CONSTRUCTION

INLET STRUCTURE – PLANS, SECTION AND DETAILS

BROOME COUNTY, NEW YORK

TOWN OF VESTAL

Barton & Loguidice, D.P.C.

75% SUBMISSION

NOT FOR CONSTRUCTION 6/10/16

Date JUNE 10, 2016

Scale AS SHOWN

Sheet Number G-7

Project Number 409.002

Plotted: Jun 09, 2016 – 5:16PM SYR By: rds
Z:\BL-Vault\D2\1821TA02-1C71-4823-8927-99D5C4D54147\0\979000-979999\979123\L\L\409002 G07 Inlet Structure Plan and Sections (ID 979123).dwg

Checked by INITIALS Drawn by GRR Designed by RDO In charge of INITIALS

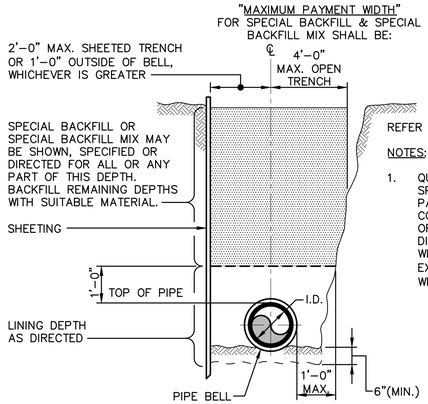

REFER TO SECTIONS 02220 AND 02224

NOTES:

1. QUANTITY OF SPECIAL BACKFILL & SPECIAL BACKFILL MIX FOR WHICH PAYMENT WILL BE MADE, WILL BE COMPUTED BY USING THE PRODUCT OF THE LENGTH, DEPTH AS DIRECTED AND THE ACTUAL TRENCH WIDTH AS EXCAVATED BUT NOT TO EXCEED THE "MAXIMUM PAYMENT WIDTH" AS SHOWN ON THIS DETAIL.

PAYMENT LIMITS FOR SPECIAL BACKFILL & SPECIAL BACKFILL MIX DETAIL

NOT TO SCALE

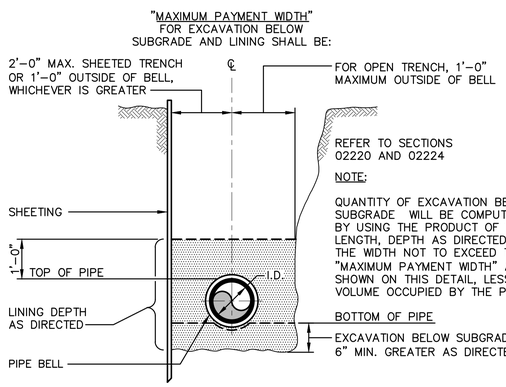

REFER TO SECTIONS 02220 AND 02224

NOTE:

QUANTITY OF EXCAVATION BELOW SUBGRADE WILL BE COMPUTED BY USING THE PRODUCT OF THE LENGTH, DEPTH AS DIRECTED AND THE WIDTH NOT TO EXCEED THE "MAXIMUM PAYMENT WIDTH" AS SHOWN ON THIS DETAIL, LESS THE VOLUME OCCUPIED BY THE PIPE.

PAYMENT LIMITS FOR EXCAVATION BELOW SUBGRADE AND LINING DETAIL

NOT TO SCALE

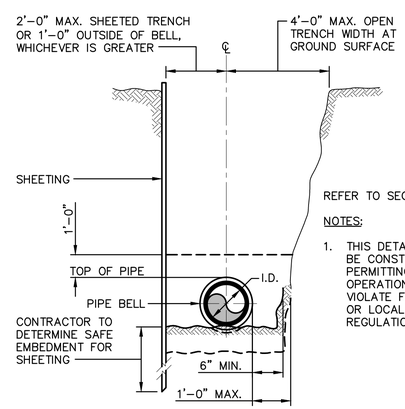

REFER TO SECTION 02220

NOTES:

1. THIS DETAIL SHALL NOT BE CONSTRUED AS PERMITTING OR REQUIRING OPERATIONS WHICH MAY VIOLATE FEDERAL, STATE OR LOCAL SAFETY REGULATIONS.

LIMITING WIDTHS OF TRENCH

NOT TO SCALE

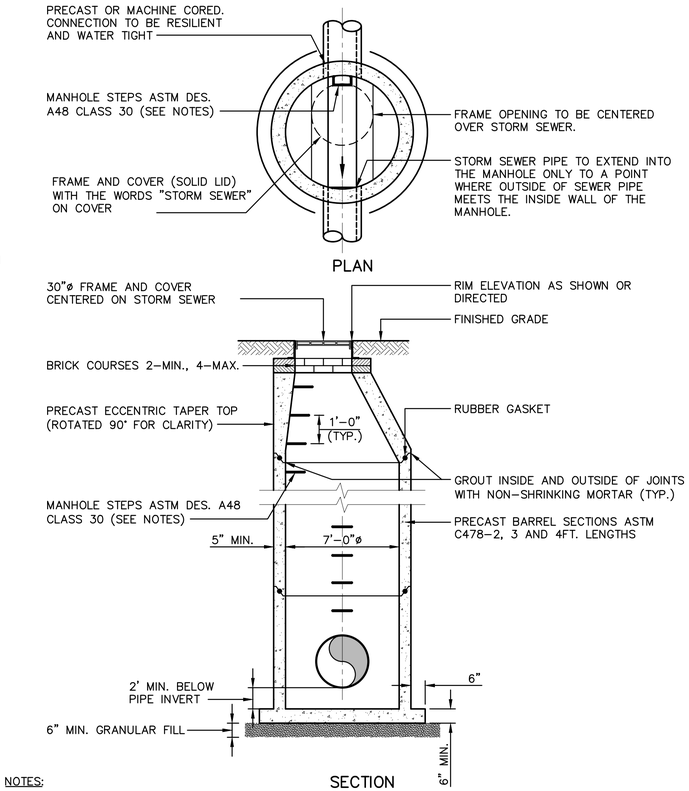

NOTES:

1. STEPS SHALL BE COPOLYMER POLYPROPYLENE WITH 1/2" GRADE STEEL.
2. CONTRACTOR SHALL CONSTRUCT, AT NO EXTRA COST, MANHOLES WITH FLAT SLAB COVERS OF APPROVED DESIGN, WHERE THE MANHOLE DEPTH IS INSUFFICIENT TO PERMIT INSTALLATION OF A TAPER TOP OR WHERE OTHERWISE SHOWN.

STANDARD MANHOLE DETAIL

NOT TO SCALE

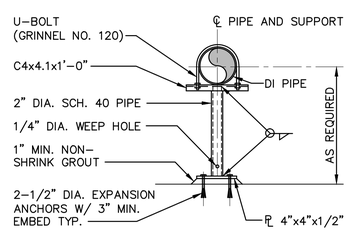

PIPE SUPPORT DETAIL

NOT TO SCALE

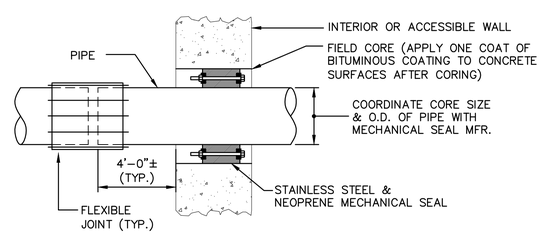

TYPICAL FIELD CORE PIPE WALL PENETRATION DETAIL

NOT TO SCALE

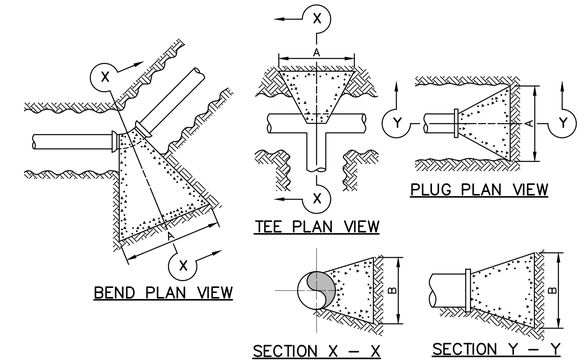

*	PIPE DIAMETER
DIMENSION (A)	24"
DIMENSION (B)	
TEE OR PLUG	7'-6"
	4'-6"
11 1/4°	3'-6"
	2'-0"
22 1/2°	4'-6"
	3'-0"
45°	8'-0"
	3'-3"
90°	8'-6"
	5'-9"

NOTE:

THRUST BLOCKS DESIGNED FOR 50 PSI HYDROSTATIC PRESSURE AND FOR BEARING AGAINST UNDISTURBED SOIL OF 1000 LBS/SQ. FT. BEARING CAPACITY

*TYPICAL DIMENSIONS OF THRUST BLOCKS FOR HORIZONTAL BENDS, TEES AND PLUGS OF WATER MAINS

NOT TO SCALE

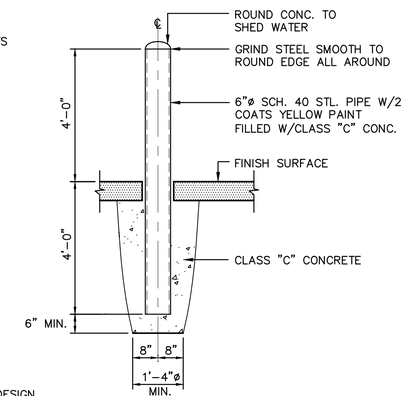

TYPICAL GUARD POST/BOLLARD DETAIL

NOT TO SCALE

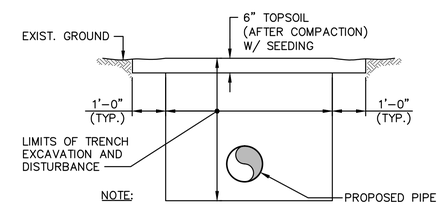

NOTE:

TOP SOIL AND SEEDING SHALL BE IN ACCORDANCE WITH SECTIONS 02484 AND 02485.

LAWN RESTORATION

NOT TO SCALE

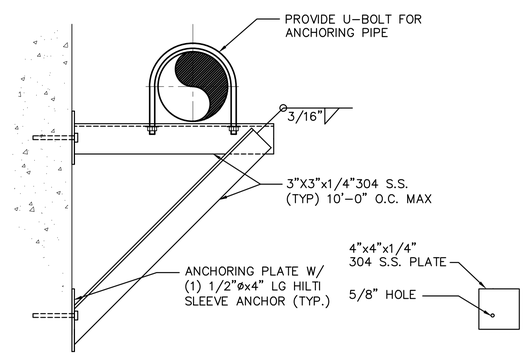

WALL PIPE SUPPORT DETAIL

NOT TO SCALE

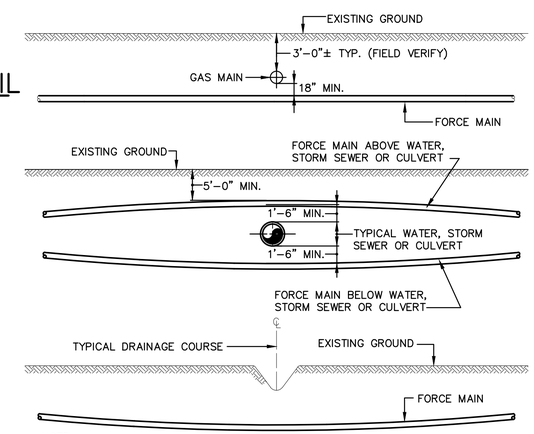

NOTE:

1. DRAINAGE COURSE CROSSING SHALL BE ACCOMPLISHED BY PIPE BENDING IF NECESSARY. BENDING RADIUS SHALL NOT BE LESS THAN MANUFACTURER'S RECOMMENDATIONS.
2. WHERE MINIMUM 18" SEPARATION FROM GAS OR WATER MAINS CANNOT BE MAINTAINED, FORCE MAIN SHALL BE ENCASED IN A MINIMUM OF 12" OF CLASS "C" CONCRETE, 10' EACH SIDE OF THE CROSSING. PAYMENT FOR ENCASEMENT SHALL BE MADE UNDER THE APPLICABLE PIPE BID ITEM.
3. CROSSING SHALL BE ACCOMPLISHED BY PIPE DEFLECTION, WITH NO RELATIVE PIPE DEFLECTION TO EXCEED 9.5" PER 18' LENGTH OF PIPE, UNLESS OTHERWISE DIRECTED BY THE ENGINEER.
4. ALL EXTRA EXCAVATION FOR CROSSINGS SHALL BE INCLUDED IN THE UNIT PRICE FOR INSTALLING THE FORCE MAIN, UNLESS OTHERWISE SPECIFIED.
5. A FULL LENGTH OF PIPE SHALL BE CENTERED ON THE CULVERT.

TYPICAL PROFILE AND CROSSING-FORCE MAIN

NOT TO SCALE

NO ALTERATION PERMITTED HEREON EXCEPT AS PROVIDED UNDER SECTION 7209 SUBDIVISION 2 OF THE NEW YORK STATE EDUCATION LAW.

COMPLETED CONSTRUCTION

Significant Construction Changes Are Shown

By _____ Date _____

Ck'd _____ Date _____

REVISIONS

TOWN OF VESTAL

ROBERT STREET STORMWATER PUMPING STATION
CONTRACT 1A - GENERAL CONSTRUCTION

MISCELLANEOUS DETAILS 1

BROOME COUNTY, NEW YORK

TOWN OF VESTAL

Barton & Loguidice, D.P.C.

75% SUBMISSION

NOT FOR CONSTRUCTION 6/10/16

Date JUNE 10, 2016

Scale AS SHOWN

Sheet Number G-8

Project Number 409.002

Plotted: Jun 09, 2016 - 5:17PM SYR By: rdo
Z:\BL-Vault\02\16217A02-1C71-4823-8927-99D5C405414F\0\973000-973999\973303\V\V\409002 G08-G09 Misc Details (ID 973303).dwg
Checked by INITIALS Drawn by GRR Designed by RDO In charge of INITIALS

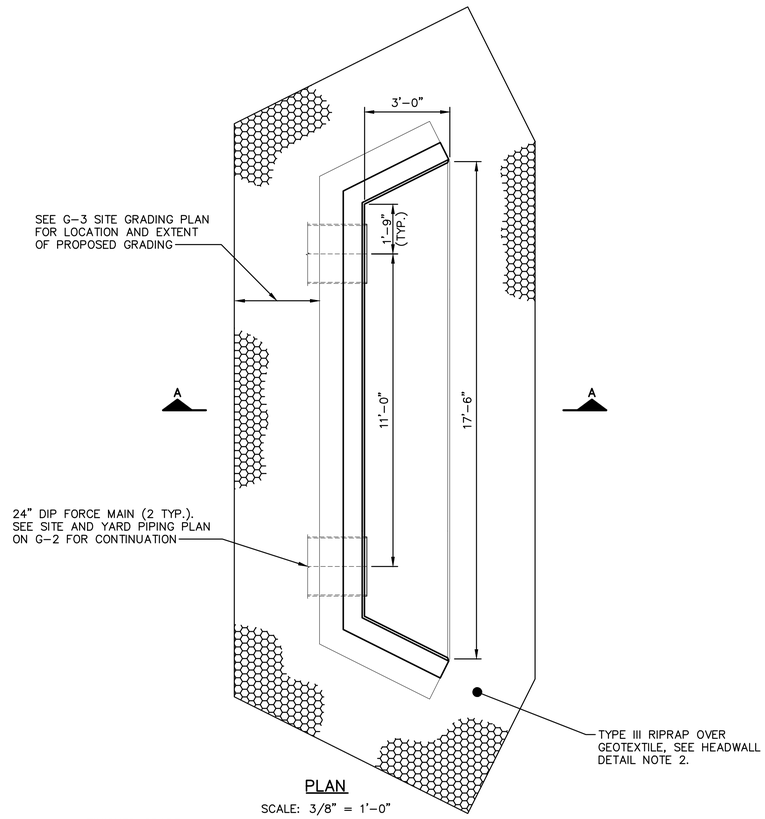

PLAN

SCALE: 3/8" = 1'-0"

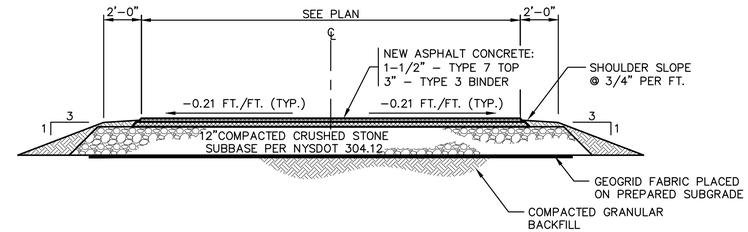

ACCESS DRIVE DETAIL

NOT TO SCALE

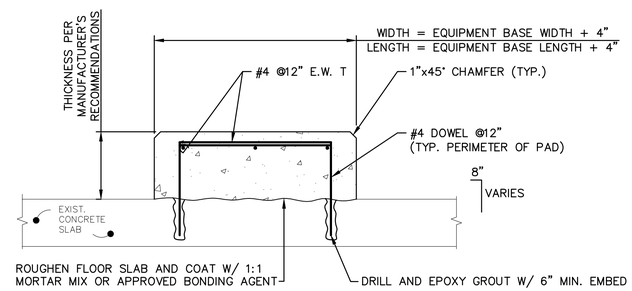

NOTES:

1. FIELD VERIFY THICKNESS REQUIRED FOR PROPER EQUIPMENT INSTALLATION HEIGHT.
2. ANCHOR EQUIPMENT TO PAD AS DIRECTED BY EQUIPMENT MANUFACTURER.

EQUIPMENT PAD DETAIL

NOT TO SCALE

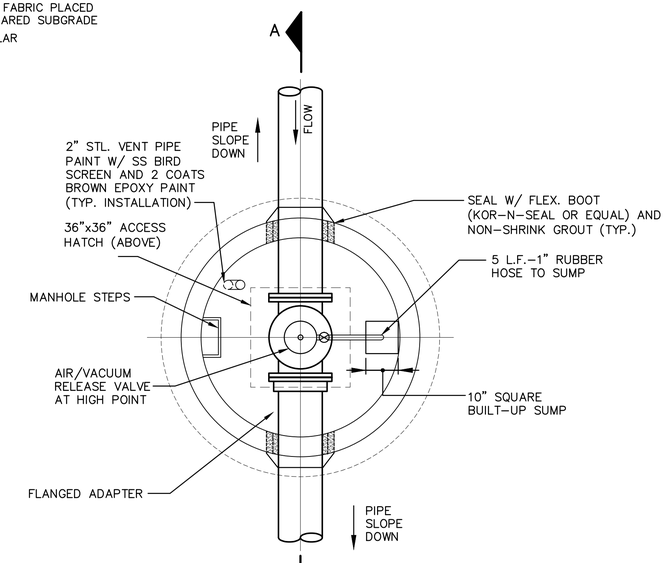

PLAN

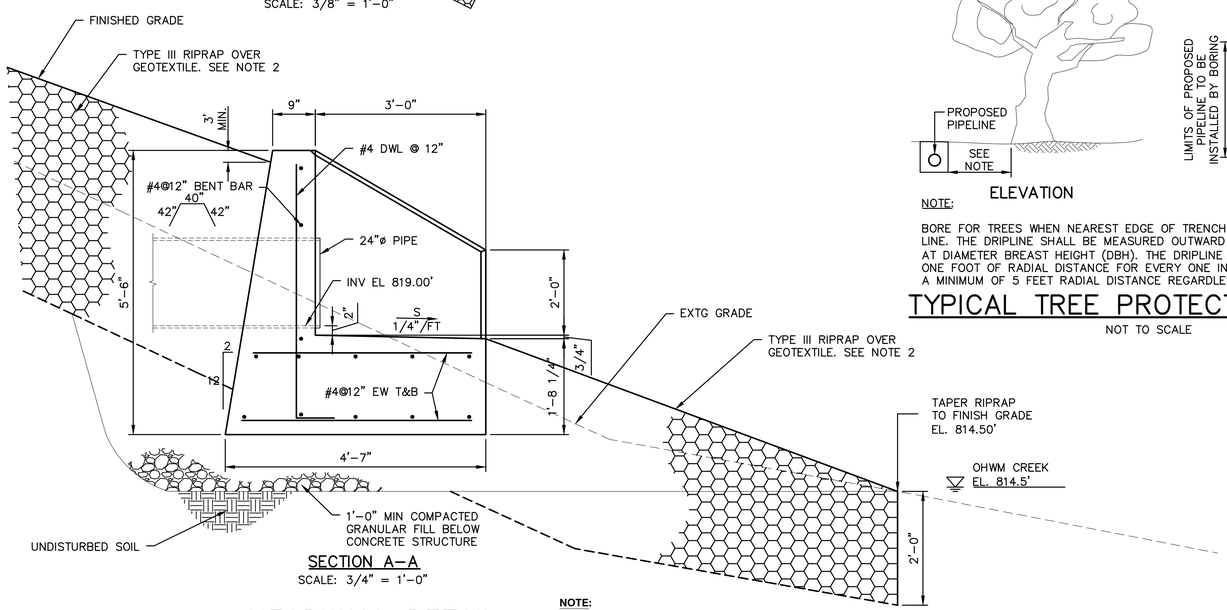

SECTION A-A

SCALE: 3/4" = 1'-0"

HEADWALL DETAIL

NOTE:

1. SEE TYPICAL REINFORCING AROUND OPENINGS IN WALL OR SLAB DETAIL, SHEET S-1 FOR ADDITIONAL REINFORCEMENT DETAIL AROUND THE PIPE PENETRATION.
2. RIPRAP SHALL BE MINIMUM OF 2' DEEP ABOVE EXISTING GRADE AND SHALL BE KEYED IN TO THE EXISTING SLOPE A MINIMUM OF 2'. SEE SITE PLAN FOR LOCATION AND EXTENT OF PROPOSED RIPRAP.

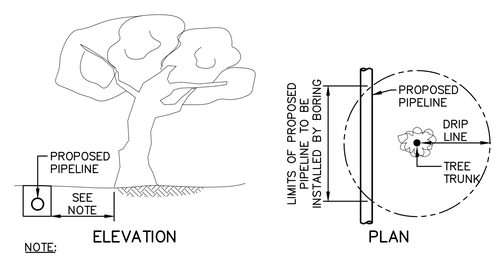

NOTE:

BORE FOR TREES WHEN NEAREST EDGE OF TRENCH IS WITHIN THE DRIP LINE. THE DRIPLINE SHALL BE MEASURED OUTWARD FROM A TREE TRUNK AT DIAMETER BREAST HEIGHT (DBH). THE DRIPLINE SHALL BE DEFINED AS ONE FOOT OF RADIAL DISTANCE FOR EVERY ONE INCH OF TREE DBH, WITH A MINIMUM OF 5 FEET RADIAL DISTANCE REGARDLESS OF TRUNK DIAMETER.

TYPICAL TREE PROTECTION DETAIL

NOT TO SCALE

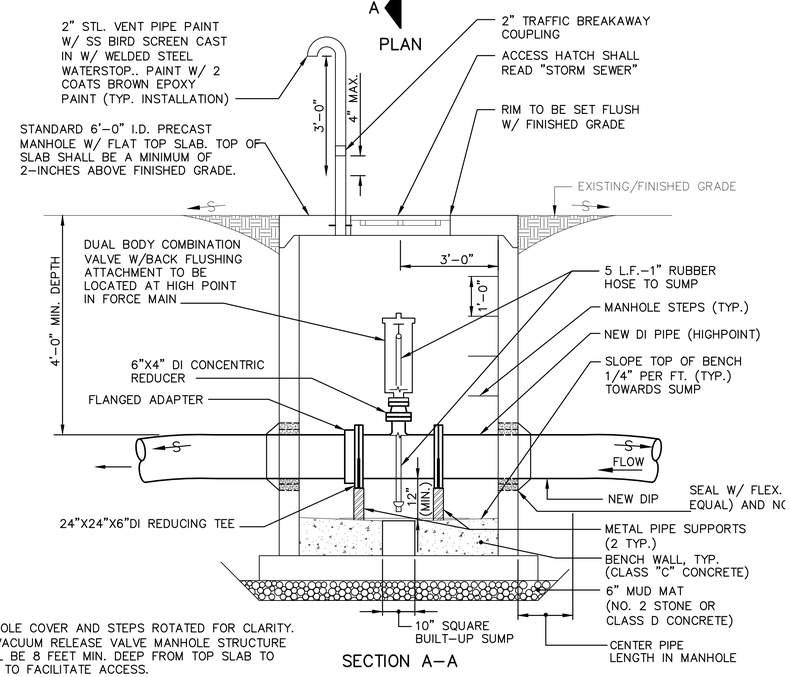

SECTION A-A

NOTE:

1. MANHOLE COVER AND STEPS ROTATED FOR CLARITY.
2. AIR/VACUUM RELEASE VALVE MANHOLE STRUCTURE SHALL BE 8 FEET MIN. DEEP FROM TOP SLAB TO BASE TO FACILITATE ACCESS.

6' AIR/VACUUM RELEASE VALVE MANHOLE DETAIL

NOT TO SCALE

NO ALTERATION PERMITTED HEREON EXCEPT AS PROVIDED UNDER SECTION 7209 SUBDIVISION 2 OF THE NEW YORK STATE EDUCATION LAW.

COMPLETED CONSTRUCTION

Significant Construction Changes Are Shown

By _____ Date _____

Ck'd _____ Date _____

REVISIONS

TOWN OF VESTAL

ROBERT STREET STORMWATER PUMPING STATION
CONTRACT 1A - GENERAL CONSTRUCTION

MISCELLANEOUS DETAILS 2

BROOME COUNTY, NEW YORK

TOWN OF VESTAL

Barton & Loguidice, D.P.C.

75% SUBMISSION

NOT FOR CONSTRUCTION 6/10/16

Date JUNE 10, 2016

Scale AS SHOWN

Sheet Number G-9

Project Number 409.002

Plotted: Jun 10, 2016 - 11:04AM SYR By: rdo
Z:\BL-Vault\02\18217A02-1C71-4823-8927-99B5C4054147\0\973000-973999\973303\L\L\409002 G08-G09 Misc Details (ID 973303).dwg

Checked by INITIALS Drawn by GRR Designed by RDO In charge of INITIALS

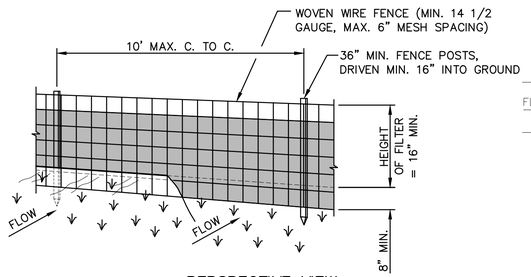

PERSPECTIVE VIEW

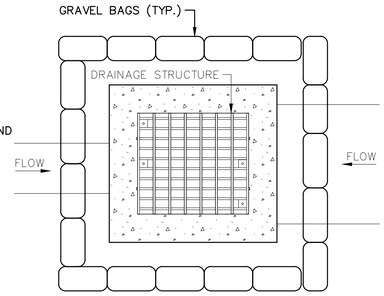

PLAN

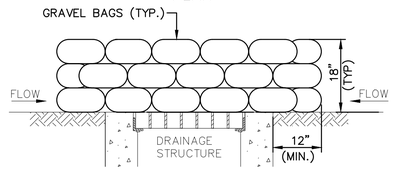

SECTION

NOTES:

1. GRAVEL BAGS SHALL BE INDIVIDUALLY TIED, DOUBLE BAGGED AND INVERSELY INSERTED. GRAVEL BAGS SHALL LAP THE JOINTS BETWEEN THE BAGS IN THE LAYER BELOW. COST OF EXCAVATION FOR INSTALLATION SHALL BE INCLUDED IN THE PRICE BID FOR ITEM.
2. GRAVEL BAGS ARE FILLED WITH CLEAN STONE RATHER THAN SAND TO PREVENT SEDIMENT FROM ENTERING A DRAINAGE SYSTEM IF BAGS ARE DAMAGED DURING USE.
3. SEDIMENT SHALL BE REMOVED WHEN ACCUMULATION REACHES ONE-HALF OF THE MEASURE HEIGHT, SEDIMENT SHALL BE DISPOSED OF AS UNSUITABLE MATERIAL.

CATCH BASIN INLET PROTECTION (GRAVEL BAG) DETAIL

NOT TO SCALE

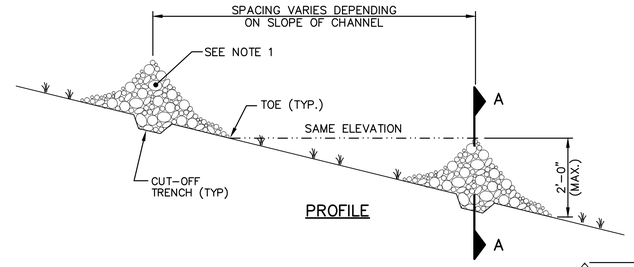

PROFILE

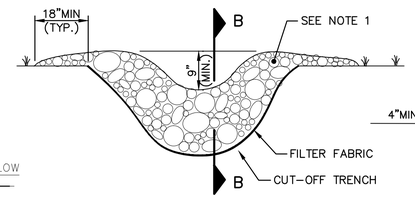

SECTION A

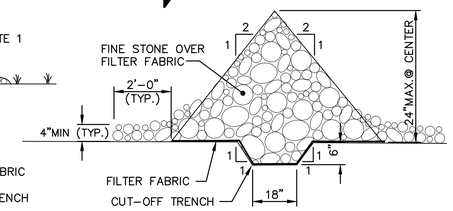

SECTION B

CONSTRUCTION SPECIFICATIONS FOR STONE CHECK DAM

1. FINE STONE WILL BE PLACED ON A FILTER FABRIC FOUNDATION 2' UPSTREAM AND DOWNSTREAM OF TOE TO A MINIMUM (MIN) DEPTH OF 4".
2. SET SPACING OF CHECK DAMS SUCH THAT THE ELEVATIONS OF THE CREST OF THE DOWNSTREAM DAM IS AT THE SAME ELEVATION OF THE TOE OF THE UPSTREAM DAM.
3. EXTEND THE STONE A MINIMUM OF 18" BEYOND THE DITCH BANKS TO PREVENT CUTTING AROUND THE DAM.
4. PROTECT THE CHANNEL DOWNSTREAM OF THE LOWEST CHECK DAM FROM SCOUR AND EROSION WITH STONE AND LINER AS DIRECTED BY ENGINEER.
5. ENSURE THAT CHANNEL APPURTENANCES SUCH AS CULVERT ENTRANCES BELOW CHECK DAMS ARE NOT SUBJECTED TO DAMAGE OR BLOCKAGE FROM DISPLACED STONES.
6. MAXIMUM DRAINAGE AREA 2 ACRES.
7. PERIODIC INSPECTION AND MAINTENANCE SHALL BE PROVIDED AFTER EACH RAIN.

STONE CHECK DAM DETAIL

NOT TO SCALE

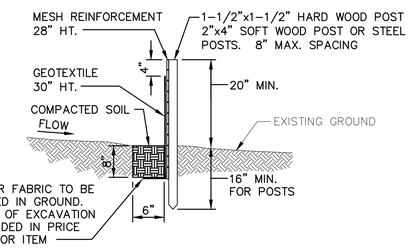

SECTION

CONSTRUCTION NOTES FOR FABRICATED SILT FENCE

1. WOVEN WIRE FENCE TO BE FASTENED SECURELY TO FENCE POSTS WITH WIRE TIES OR STAPLES.
2. FILTER CLOTH TO BE FASTENED SECURELY TO WOVEN WIRE FENCE WITH TIES SPACED EVERY 24" AT TOP AND MID SECTION.
3. WHEN TWO SECTIONS OF FILTER CLOTH ADJOIN EACH OTHER THEY SHALL BE OVERLAPPED BY SIX INCHES AND FOLDED.
4. MAINTENANCE SHALL BE PERFORMED AS NEEDED AND MATERIAL REMOVED WHEN "BULGES" DEVELOP IN THE SILT FENCE.

POSTS: STEEL EITHER "T" OR "U" TYPE OR 2" HARDWOOD

FENCE: WOVEN WIRE, 14 1/2 GA. 6" MAX. MESH OPENING

FILTER CLOTH: FILTER X, MIRAFI 100X, STABILINKA T140N OR APPROVED EQUAL

PREFABRICATED UNIT: GEOFAB, ENVIROFENCE, OR APPROVED EQUAL

SILT FENCE DETAIL

NOT TO SCALE

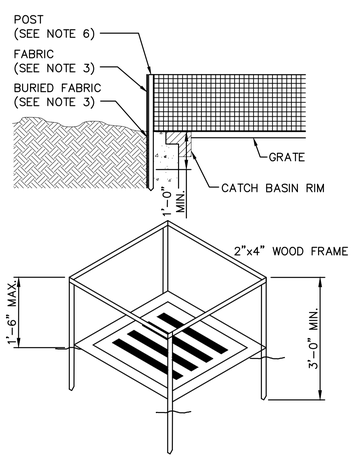

NOTES:

1. CUT FABRIC FROM A CONTINUOUS ROLL TO ELIMINATE JOINTS. IF JOINTS ARE REQUIRED, FABRIC SHALL BE OVERLAPPED TO THE NEXT STAKE.
2. SPACE STAKES EVENLY AROUND INLET 3 FEET APART AND DRIVE A MINIMUM 18 INCHES DEEP. SPANS GREATER THAN 3 FEET MAY BE BRIDGED WITH THE USE OF WIRE MESH BEHIND THE FILTER FABRIC FOR SUPPORT.
3. FABRIC SHALL BE EMBEDDED 1 FOOT MINIMUM BELOW GROUND AND BACKFILLED. IT SHALL BE SECURELY FASTENED TO THE STAKES AND FRAME.
4. A 2"x4" WOOD FRAME SHALL BE COMPLETED AROUND THE CREST OF THE FABRIC FOR OVER FLOW STABILITY.
5. MAINTENANCE SHALL BE PERFORMED AS NEEDED AND MATERIAL REMOVED WHEN "BULGES" DEVELOP IN THE SILT FENCE.
6. POSTS: STEEL "T" OR "U" TYPE OR 2" HARDWOOD;
   FENCE: WOVEN WIRE, 14 1/2 GAUGE, 6" MAX. MESH OPENING;
   FILTER CLOTH: FILTER X, MIRAFI 100X, STABILINKA T140N OR APPROVED EQUAL.

CATCH BASIN INLET PROTECTION (SILT FENCE) DETAIL

NOT TO SCALE

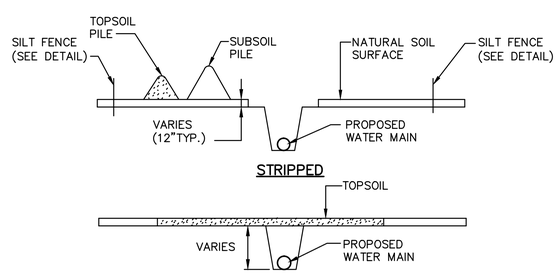

NOTE:

TOPSOIL AND SUBSOIL TO BE PILED IN SEPARATE PARALLEL BERMS ALONGSIDE THE TRENCH DURING CONSTRUCTION AND USED IN BACKFILL OPERATIONS.

TRENCH EXCAVATION AND BACKFILL DETAIL FOR WETLAND AREAS AND NYSDEC 100 FOOT ADJACENT AREA

NOT TO SCALE

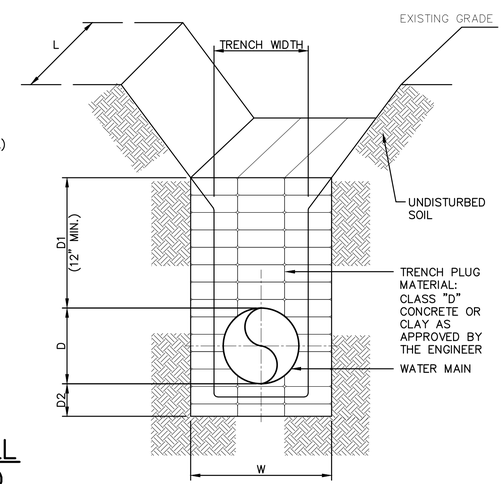

D = PIPE DIAMETER

D1 = HEIGHT OF LINING STONE ABOVE WATER MAIN 6" BELOW GRADE

D2 = DEPTH OF LINING STONE BELOW WATER MAIN +4 INCHES

W = TRENCH WIDTH + 24 INCHES MINIMUM (MINIMUM 12" WIDER THAN LINING STONE EACH SIDE OF WATER MAIN)

L = BLOCK 18 TO 24 INCHES

NOTE:

MANUFACTURED ANTI-SEEP COLLARS MAY BE USED IN LIEU OF CONCRETE OR CLAY TRENCH PLUG MATERIAL, AS APPROVED BY ENGINEER.

TRENCH BLOCK DETAIL

NOT TO SCALE

NOTES:

1. ALL NECESSARY PRECAUTIONS SHALL BE TAKEN TO PREVENT CONTAMINATION OF ANY STREAMS OR WATERWAYS BY SILT, SEDIMENTS, FUEL SOLVENTS, LUBRICANTS, EPOXY COATINGS, CONCRETE LEACHATE OR ANY OTHER POLLUTANT ASSOCIATED WITH CONSTRUCTION AND CONSTRUCTION PROCEDURES.
2. DURING CONSTRUCTION, NO WET OR FRESH CONCRETE SHALL BE ALLOWED TO ESCAPE INTO ANY WATERS, NOR SHALL WASHINGS FROM CONCRETE TRUCKS, MIXERS, OR OTHER DEVICES BE ALLOWED TO ENTER ANY WATERS.
3. ANY DEBRIS OR EXCESS MATERIALS FROM CONSTRUCTION SHALL BE IMMEDIATELY AND COMPLETELY REMOVED FROM THE BED OF AND BANKS OF ALL WATER AREAS TO APPROPRIATE UPLAND AREAS FOR DISPOSAL.
4. ALL DREDGED AND EXCAVATED MATERIAL SHALL BE DISPOSED OF ON AN UPLAND SITE AND BE SUITABLY STABILIZED SO THAT IT CANNOT REASONABLY RE-ENTER ANY BODY OF WATER OR WETLAND.
5. INSPECTION, PERIODIC CLEANING AND MAINTENANCE OF TEMPORARY SOIL EROSION AND WATER POLLUTION CONTROL DEVICES SHALL BE CONDUCTED AT LEAST ONCE PER 7 CALENDAR DAYS.
6. ALL CONTROLS SHALL BE PLACED PRIOR TO STARTING EARTHWORK OPERATIONS AND SHALL REMAIN IN PLACE UNTIL THE NEW SLOPES ARE STABILIZED WITH SEEDING AND/OR SLOPE PROTECTION AND A.O.B.E.
7. FILTER FABRIC SHALL SATISFY THE REQUIREMENTS OF SECTION 207-11 OF THE NEW YORK STATE DEPARTMENT OF TRANSPORTATION STANDARD SPECIFICATIONS.
8. HEAVY EQUIPMENT SHALL NOT BE DRIVEN IN THE WATER.
9. SEDIMENT CONTROL FENCE SHALL NOT BE USED IN AREAS OF CONCENTRATED FLOW,
10. ALL AREAS OF SOIL DISTURBANCES RESULTING FROM THIS PROJECT SHALL BE SEEDED WITH AN APPROPRIATE PERENNIAL GRASS SEED AND MULCHED WITH HAY OR STRAW WITHIN ONE WEEK OF FINAL GRADING. MULCH SHALL BE MAINTAINED UNTIL A SUITABLE COVER IS ESTABLISHED.
11. IN THE EVENT A DEWATERING OPERATION BECOMES NECESSARY, A SETTLING BASIN WILL BE REQUIRED UNLESS THE PUMP DISCHARGE IS AS CLEAN AND FREE OF SEDIMENT AS THE FLOWING STREAM. ALL EFFORTS SHALL BE COORDINATED THRU THE ENGINEER AND THE NYSDEC REGIONAL PERMIT ADMINISTRATOR. DELAYS OR EXTRA COSTS ASSOCIATED WITH SECURING APPROVALS, OR ADDITIONAL PERMITS, FOR DEWATERING OPERATIONS WILL BE THE RESPONSIBILITY OF THE CONTRACTOR.
12. NO DISCHARGE OF TEMPORARY FILL MATERIAL INTO THE WATERWAY IS PERMITTED. SHOULD THE CONTRACTOR WISH TO CONSTRUCT A TEMPORARY ACCESS OR CAUSEWAY IN THE WATER TO FACILITATE REMOVALS OR NEW CONSTRUCTION, ADDITIONAL PERMITS FROM THE U.S. ARMY CORPS OF ENGINEERS AND N.Y.S. DEPT. OF ENVIRONMENTAL CONSERVATION MAY BE REQUIRED. ALL EFFORTS SHALL BE COORDINATED THRU THE ENGINEER AND THE NYSDEC REGIONAL PERMIT ADMINISTRATOR. DELAYS OR EXTRA COSTS ASSOCIATED WITH SECURING APPROVALS, OR ADDITIONAL PERMITS, FOR THE PLACEMENT OF THE TEMPORARY FILLS WILL BE THE RESPONSIBILITY OF THE CONTRACTOR.
13. SAND BAGS APPROVED FOR USE SHALL BE OF A REINFORCED GEOTEXTILE TYPE WITH TIES. NO BURLAP BAGS SHALL BE USED. SAND OR GRAVEL MAY BE USED AS THE FILL MATERIAL WITH THIS TYPE OF BAG IF MATERIAL IS DOUBLE BAGGED AND INDIVIDUALLY TIED TO PREVENT LEAKAGE. GRAVEL MATERIAL USED TO FILL THE BAGS SHALL MEET THE SIZE DESIGNATION #1 OF TABLE 703-4 OF THE STANDARD NYSDOT SPECIFICATION.
14. THE COST OF INSTALLING, CLEANING, AND REMOVING TEMPORARY SOIL EROSION AND WATER POLLUTION CONTROL DEVICES SHALL BE INCLUDED UNDER THE FURNISH AND INSTALL WATER MAIN, HIGHWAY CROSSING AND STREAM CROSSING BID ITEMS. NO SEPARATE PAYMENT SHALL BE MADE FOR WORK ON THIS SHEET.
15. IN AREAS WHERE TRENCH MUST BE CONSTRUCTED ADJACENT TO A WETLAND, WATER COURSE, OR DRAINAGE CONVEYANCE, STOCK PILES AND OPEN SOIL AREAS SHALL BE SEPARATED FROM THE ABOVE DRAINAGE FEATURES BY A ROW OF SILT FENCE. WHERE TRENCHES ARE LOCATED WITHIN AN UNREGULATED (NON-JURISDICTIONAL) DRAINAGE DITCH, STONE CHECK DAMS SHALL BE INSTALLED TO CONTROL EROSION.
16. ROLLED EROSION CONTROL PRODUCT INSTALLATION SHALL FOLLOW NORTH AMERICAN GREEN, OR APPROVED EQUAL, PRODUCT INSTALLATION SPECIFICATIONS FOR SLOPE OR CHANNEL INSTALLS.
17. DUST CONTROL MEASURES SHALL BE USED ON CONSTRUCTION ROADS, ACCESS POINTS, AND OTHER DISTURBED AREAS. VEGETATION SHOULD BE LEFT WHERE PRACTICAL, AND TEMPORARY OR PERMANENT STABILIZATION MEASURES SHALL BE INSTALLED. NON-GRAVEL DRIVING AREAS SHALL BE SPRAYED WITH WATER UNTIL WET, OR GEOTEXTILE OR STONE MAY BE PLACED ON THE DRIVING SURFACE TO REDUCE DUST.
18. CARE SHALL BE TAKEN TO RETAIN VEGETATION AND PREVENT DAMAGE TO TREES AND ORNAMENTAL PLANT MATERIAL WITHIN AND OUTSIDE THE LIMITS OF CONSTRUCTION, AND NOT SCHEDULED FOR REMOVAL. ANY DAMAGE CAUSED TO THIS VEGETATION SHALL BE RESTORED AT THE EXPENSE OF THE CONTRACTOR AS DIRECTED BY THE ENGINEER.

U.S. ARMY CORPS OF ENGINEERS

SECTION 404 OF THE CLEAN WATER ACT (33 U.S.C. 1344) PROHIBITS THE DISCHARGE OF DREDGED OR FILL MATERIALS INTO THE WATERS OF THE UNITED STATES WITHOUT A PERMIT FROM THE U.S. ARMY CORPS OF ENGINEERS. THE CONTRACTOR SHALL COMPLY WITH ALL PROVISIONS OF U.S. ARMY CORPS OF ENGINEERS' SECTION 404/10 NATIONWIDE PERMIT(S).

N.Y.S. DEPARTMENT OF ENVIRONMENTAL CONSERVATION

THE CONTRACTOR SHALL COMPLY WITH ALL PROVISIONS OF THE DEPARTMENT OF ENVIRONMENTAL CONSERVATION SECTION 401 BLANKET WATER QUALITY CERTIFICATION PERMIT, AND THE SPDES GENERAL PERMIT (GP-0-15-002) FOR STORM WATER DISCHARGES ASSOCIATED WITH CONSTRUCTION ACTIVITY. ANY PENALTIES OR VIOLATIONS FROM FAILURE TO FOLLOW THE SPDES PERMIT OR SWPPP SHALL BE THE SOLE RESPONSIBILITY OF THE CONTRACTOR.

GENERAL NOTE

CONTRACTOR IS RESPONSIBLE FOR INSTALLING AND MAINTAINING ADDITIONAL PRACTICES NOT INCLUDED IN THE SWPPP AS NECESSARY TO PREVENT WATER QUALITY VIOLATIONS.

NO ALTERATION PERMITTED HEREON EXCEPT AS PROVIDED UNDER SECTION 7209 SUBDIVISION 2 OF THE NEW YORK STATE EDUCATION LAW.

COMPLETED CONSTRUCTION

Significant Construction Changes Are Shown

By _____ Date _____

Ck'd _____ Date _____

REVISIONS

TOWN OF VESTAL

ROBERT STREET STORMWATER PUMPING STATION
CONTRACT 1A – GENERAL CONSTRUCTION

ERISION AND SEDIMENT CONTROL DETAILS 1

BROOME COUNTY, NEW YORK

TOWN OF VESTAL

Barton & Loguidice, D.P.C.

75% SUBMISSION

NOT FOR CONSTRUCTION 6/10/16

Date JUNE 10, 2016

Scale AS SHOWN

Sheet Number G-10

Project Number 409.002

Plotted: Jun 09, 2016 – 5:18PM SYR By: rdo
Z:\BL-Vault\D2\18217A02-1C71-4823-8927-9905C4654147\0\973000-973999\973512\L\L\409002 C10-G11 E&SC Details (ID 973512).dwg

Checked by INITIALS Drawn by GRR Designed by RDO In charge of INITIALS

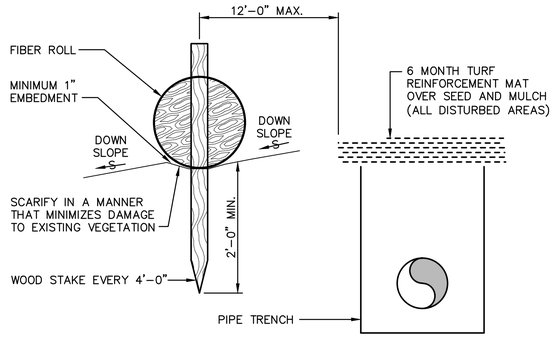

TEMPORARY FIBER ROLL DETAIL

NOT TO SCALE

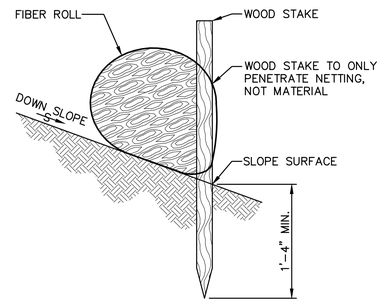

FIBER ROLL STAKE SECTION (ON BARE SOIL)

NOT TO SCALE

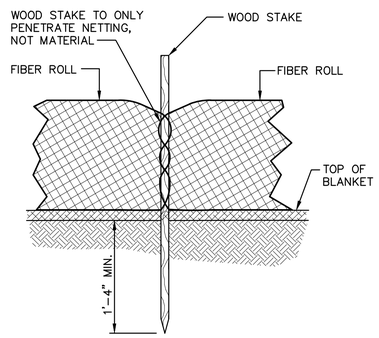

FIBER ROLL STAKE FRONT ELEVATION

NOT TO SCALE

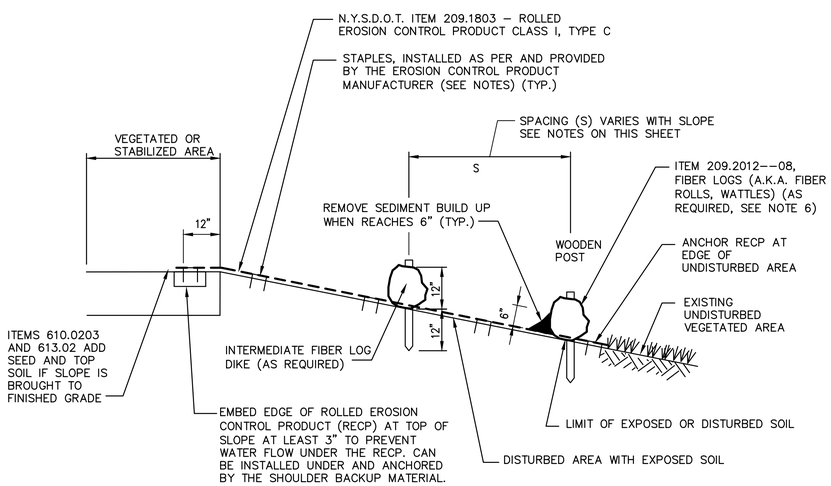

EROSION AND SEDIMENT CONTROL FOR ALL DISTURBED AREAS TEMPORARY OR PERMANENT

NOT TO SCALE

A. THE PRIMARY PURPOSE OF A FIBER ROLL DIKE IS TO REDUCE RUNOFF VELOCITY AND TRAP SEDIMENT. VELOCITY IS REDUCED, WATER IS IMPOUNDED BEHIND THE MEASURE, AND SEDIMENT FALLS OUT OF SUSPENSION.

B. FIBER ROLL DIKES CAN BE USED IN SENSITIVE AREAS WHERE CONTROL OF WEEDS AND INVASIVE PLANT SPECIES IS DESIRED.

C. FIBER ROLL DIKE SHALL BE INSTALLED ON A LINE OF EQUAL ELEVATION (CONTOUR). THEY MAY BE INSTALLED AT INTERMEDIATE POINTS UP SLOPES AS WELL AS AT THE BOTTOM, AS SHOWN IN THE DETAIL. THE ENDS SHALL CURVE UP SLIGHTLY (6") TO IMPOUND RUNOFF.

D. FIBER ROLLS SHALL NOT BE USED IN OR ACROSS A FLOWING NATURAL CHANNEL.

E. FIBER ROLLS ARE NOT TO BE INSTALLED SO THAT RUNOFF WILL FLOW ALONG THE FIBER ROLL IN A CONCENTRATED MANNER.

FIBER ROLL GENERAL NOTES:

1. FIBER ROLL DIKE SHALL BE PLACED A MINIMUM OF 2 FEET FROM TOE OF SLOPE, (5 FEET PREFERRED), TO PROVIDE ADEQUATE AREA FOR SEDIMENT STORAGE AND TO FACILITATE MAINTENANCE OF THE SEDIMENT CONTAINMENT AREA.

2. POSTS MAY BE 1.5" x 1.5" (MINIMUM) HARDWOOD, 1.5" x 3.5" (MINIMUM) SOFTWOOD, OR 2kg/m (MIN) STEEL. SPACING SHALL BE 36" (MAXIMUM) BETWEEN STAKES.

3. MEASURES SHALL BE INSPECTED EVERY SEVEN (7) CALENDAR DAYS, AFTER EACH RAINFALL OF 0.5" OR MORE WITHIN A 12 HOUR PERIOD, OR DAILY DURING PROLONGED RAINFALL. MEASURES SHALL BE CLEANED AND REPAIRED AS REQUIRED.

4. SEDIMENT SHALL BE REMOVED WHEN ACCUMULATION REACHES ONE–HALF OF THE MEASURE HEIGHT. SEDIMENT SHALL BE DISPOSED OF AS UNSUITABLE MATERIAL.

5. DRAINAGE AREAS:
MAXIMUM DRAINAGE AREA TRIBUTARY TO 100' OF FIBER ROLL SHALL BE 0.5 ACRE

6. THE FOLLOWING ARE MAXIMUM SLOPE LENGTHS TO FIBER ROLL MEASURES:

SLOPE	S
1:2	25'
1:3	80'
1:4	130'
1:5	200'

NOTES:

1. ITEMS IN DETAILS MAY APPEAR EXAGGERATED TO SHOW DETAIL.

2. IF SLOPE IS BROUGHT TO FINISHED GRADE, PERMANENT TOP SOIL AND SEEDING SHALL BE INSTALLED PRIOR TO INSTALLING ITEM 209.1803 – ROLLED EROSION CONTROL PRODUCT (RECP).

3. ROLLED EROSION CONTROL PRODUCT (RECP) MUST BE SELECTED FROM THE NYSDOT APPROVED MATERIALS LIST FOR CLASS I TYPE C RECP AND HAVE A LONGEVITY OF AT LEAST TWELVE (12) MONTHS. PAYMENT WILL NOT BE MADE FOR MATERIALS THAT ARE NOT ON THE APPROVED LIST, IMPROPERLY INSTALLED, NOT MAINTAINED, DAMAGED BY THE CONTRACTOR AND/OR SUB–CONTRACTORS.

4. RECP MUST BE FLUSH AND IN CONTACT WITH THE SOIL AND NOT RAISED BY CLUMPS, WEEDS, STICKS, ETC. AND MUST BE STAPLED SECURELY.

5. ALL RECP DAMAGED BY CONTRACTOR AND/OR SUBCONTRACTORS SHALL BE REPAIRED WITHIN THREE (3) CALENDAR DAYS OF THE DAMAGE OCCURRENCE AT NO ADDITIONAL COST TO THE OWNER.

6. AS PART OF FINAL STABILIZATION, WOODEN STAKES TO BE REMOVED AND FIBER LOG MULCH NETTING CUT OPEN ALONG ENTIRE LENGTH.

NOTES:

1. MODIFICATIONS MAY BE REQUIRED TO MEET FIELD CONDITIONS.

2. A 30 FT. WASH AREA SHALL BE PROVIDED. ADDITIONAL GRADING MAY BE REQUIRED TO PROVIDE WASHING AREAS.

3. PROPOSED DRAINAGE PIPES SHALL BE SIZED WITH SUFFICIENT CAPACITY TO CARRY DITCH FLOWS.

4. ALTERNATIVE WAYS OF TRANSPORTING DITCH DRAINAGE ACROSS CONSTRUCTION ENTRANCES MAY BE PROPOSED BY THE CONTRACTOR FOR APPROVAL BY THE ENGINEER.

5. ALL WORK TO CONSTRUCT THE STABILIZED ENTRANCE, INCLUDING GRADING, DRAINAGE PIPE, EXCAVATION, FILL, GEOTEXTILE, CRUSHED STONE, GRAVEL, CORRUGATED STEEL PANELS SHALL BE INCLUDED IN THE UNIT PRICE BID.

6. GEOTEXTILE SHALL BE PLACED OVER THE ENTIRE AREA OF STABILIZED CONSTRUCTION ENTRANCE PRIOR TO PLACING STONE. STONE SHALL BE X" DIAMETER OR RECLAIMED OR RECYCLED CONCRETE EQUIVALENT.

7. ALL SURFACE WATER SHALL BE DIVERTED AWAY FROM CONSTRUCTION ENTRANCE. A MOUNTABLE BERM WITH 5:1 SLOPE IS PERMITTED.

8. THE ENTRANCE SHALL BE MAINTAINED IN A CONDITION WHICH WILL PREVENT TRACKING OR FLOWING OF SEDIMENT ONTO PUBLIC RIGHT OF WAY. ALL SEDIMENT SPILLED, DROPPED, WASHED OR TRACKED ONTO PUBLIC RIGHT OF WAY MUST BE REMOVED IMMEDIATELY.

9. WHEN WASHING IS REQUIRED, IT SHALL BE DONE ON AN AREA WITH STONE AND WHICH DRAINS ONTO AN APPROVED SEDIMENT TRAPPING DEVICE (OR CORRUGATED STEEL PANELS).

10. PERIODIC INSPECTION AND NEEDED MAINTENANCE SHALL BE DONE REGULARLY AND FOLLOWING EACH RAINFALL.

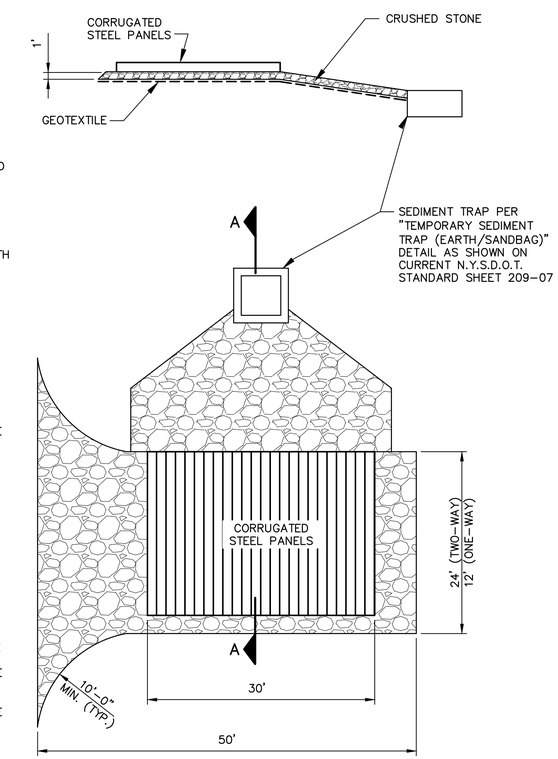

STABILIZED CONSTRUCTION ENTRANCE/EXIT AND TIRE WASHING STATION

NOT TO SCALE

NO ALTERATION PERMITTED HEREON EXCEPT AS PROVIDED UNDER SECTION 7209 SUBDIVISION 2 OF THE NEW YORK STATE EDUCATION LAW.

COMPLETED CONSTRUCTION

Significant Construction Changes Are Shown

By _____ Date _____

Ck'd _____ Date _____

REVISIONS

TOWN OF VESTAL

ROBERT STREET STORMWATER PUMPING STATION
CONTRACT 1A – GENERAL CONSTRUCTION

ERISION AND SEDIMENT CONTROL DETAILS 2

BROOME COUNTY, NEW YORK

TOWN OF VESTAL

Barton & Loguidice, D.P.C.

75% SUBMISSION

NOT FOR CONSTRUCTION 6/10/16

Date
JUNE 10, 2016

Scale
AS SHOWN

Sheet Number
G–11

Project Number
409.002

Plotted: Jun 09, 2016 – 5:18PM SYR By: rdo
Z:\BL-Vault\02\16217A02-1C71-4823-8927-99905c405d147\0\973000-973999\973512\L\L\409002 G10-G11 E&SC Details (10 973512).dwg

Checked by INITIALS Drawn by GRR Designed by RDO In charge of INITIALS

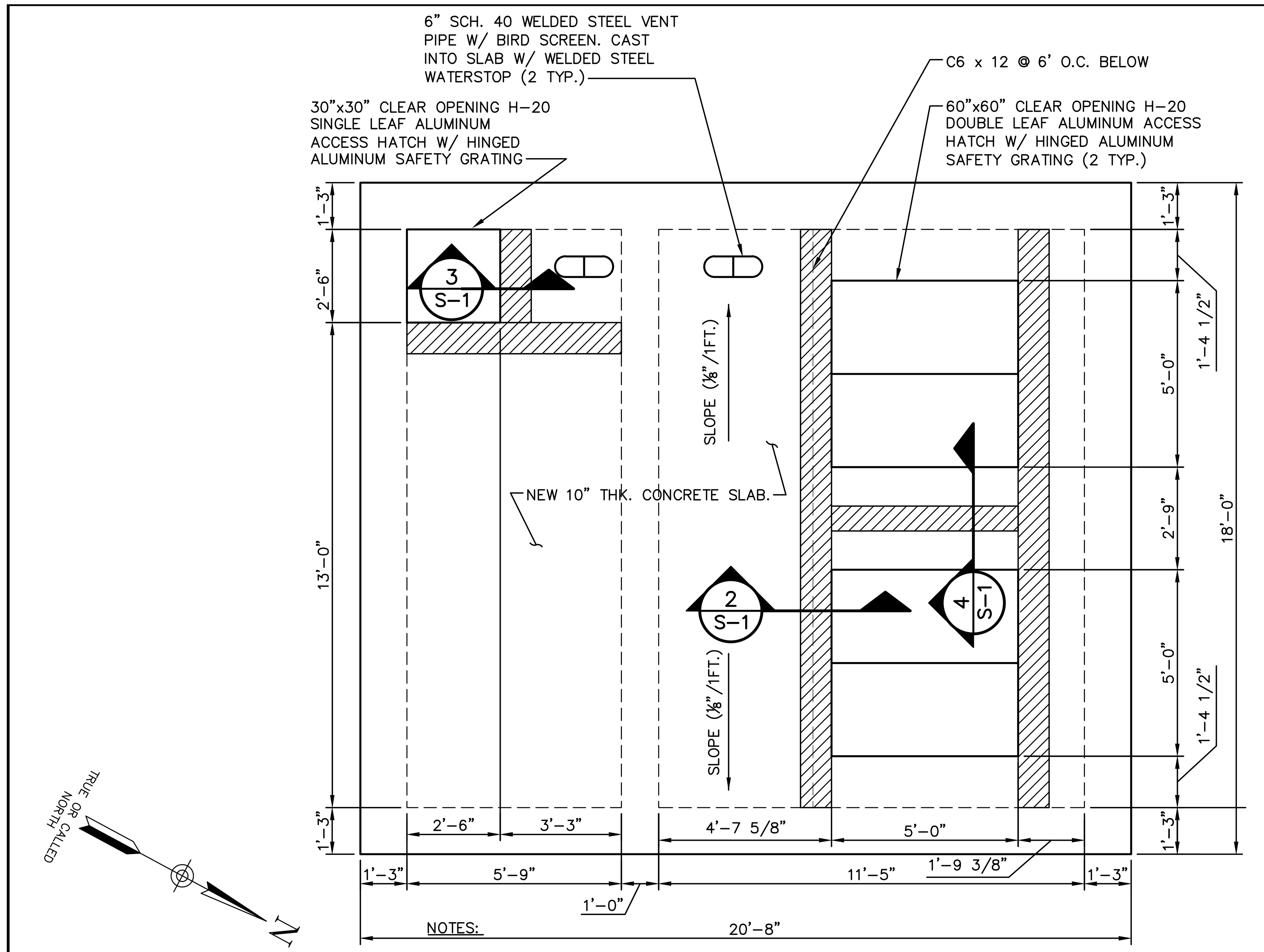

NOTES:

1. XYPEX ADMIXTURE IN SLAB & XYPEX WATERPROOFING IN JOINT BETWEEN TOP OF WALL & BOTTTOM OF NE SLAB.
2. CONTR. TO SUBMIT SIGNED AND STAMPED TEMPORARY FORM SHORING PLANS & DETAILS FOR CONC. SLAB CONSTRUCTION. SHORING TO BE DESIGNED NY A PROFESSIONAL ENGINEER CURRENTLY REGISTERED IN NY STATE.

3/8"=1'-0" 2' 0 3' 6'

SLAB PLAN

SCALE: 3/8" = 1'-0"

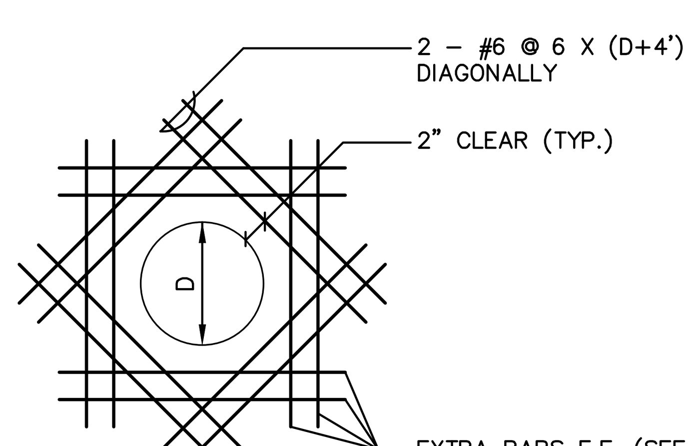

NOTES:

1. ON EACH SIDE OF OPENING PROVIDE EXTRA BARS EQUIVALENT IN AREA TO 1/2 THE AREA OF BARS CUT BY THE OPENING. MIN. BAR SIZE SHALL BE #5.
2. EXTEND EXTRA BARS A MIN. OF 48 BAR DIAMETER BEYOND THE FACE OF THE OPENING.

TYPICAL REINFORCING AROUND OPENINGS IN WALL OR SLAB DETAIL

NOT TO SCALE

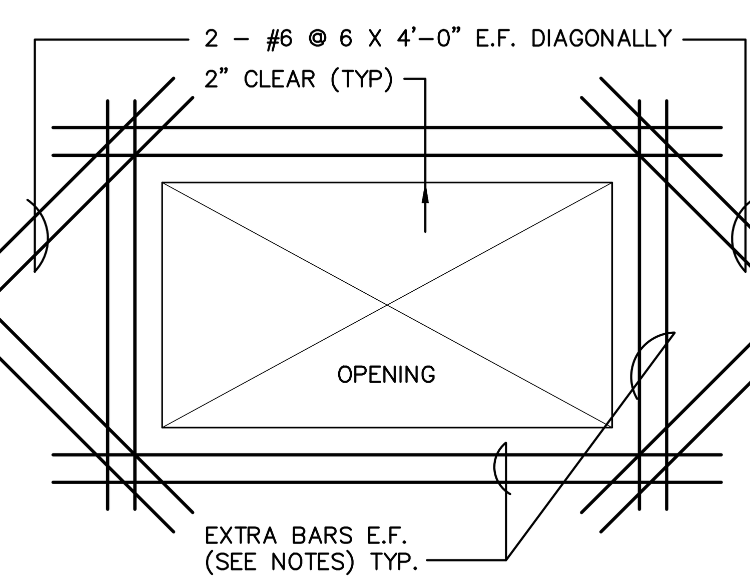

NOTES:

1. ON EACH SIDE OF OPENING PROVIDE EXTRA BARS EQUIVALENT IN AREA TO 1/2 THE AREA OF BARS CUT BY THE OPENING. MIN. BAR SIZE SHALL BE #5
2. EXTEND EXTRA BARS A MIN. OF 48 BAR DIAMETER BEYOND THE FACE OF THE OPENING.

TYPICAL REINFORCING AT RECTANGULAR OPENINGS DETAIL

NOT TO SCALE

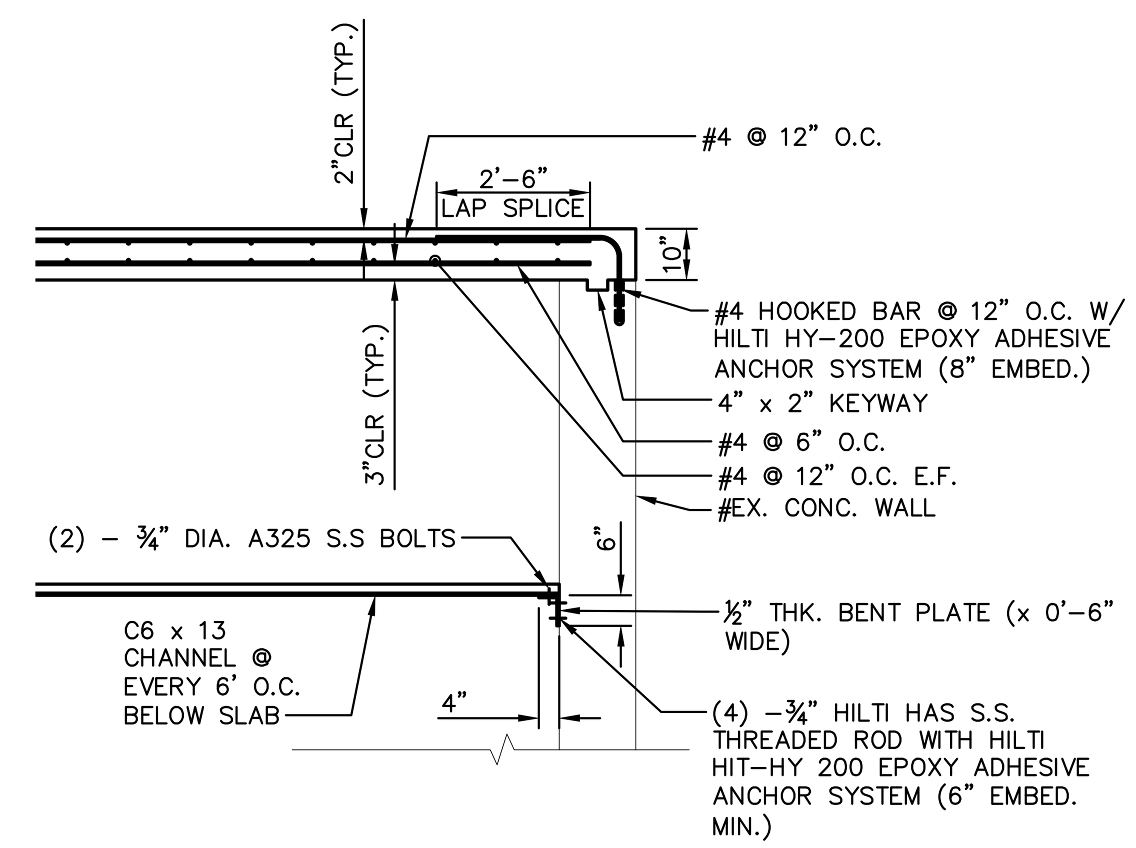

SECTION 1/S-1

SCALE: 3/8" = 1'-0"

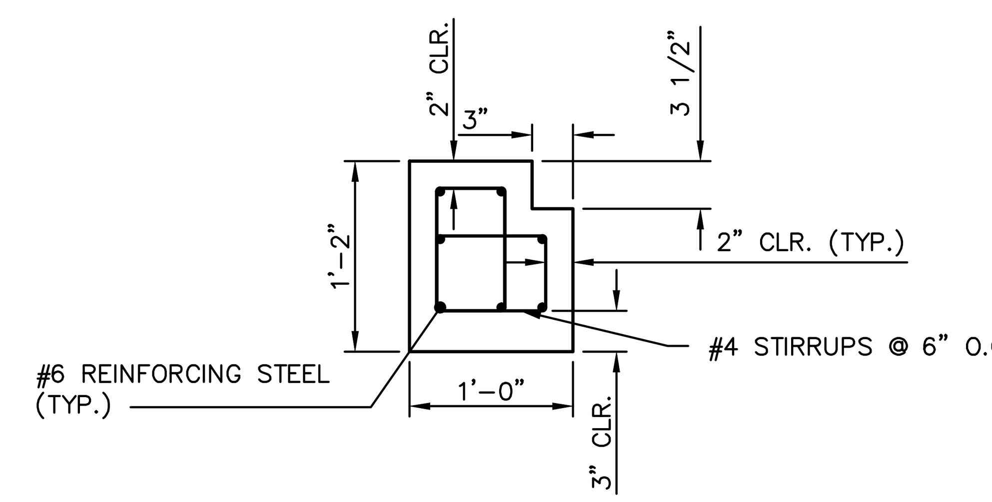

SECTION 2/S-1

SCALE: 1" = 1'-0"

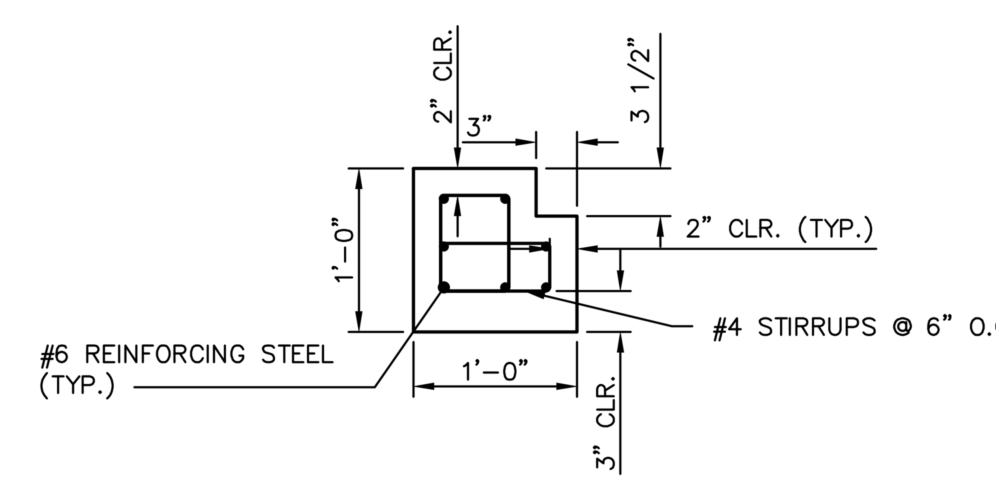

SECTION 3/S-1

SCALE: 1" = 1'-0"

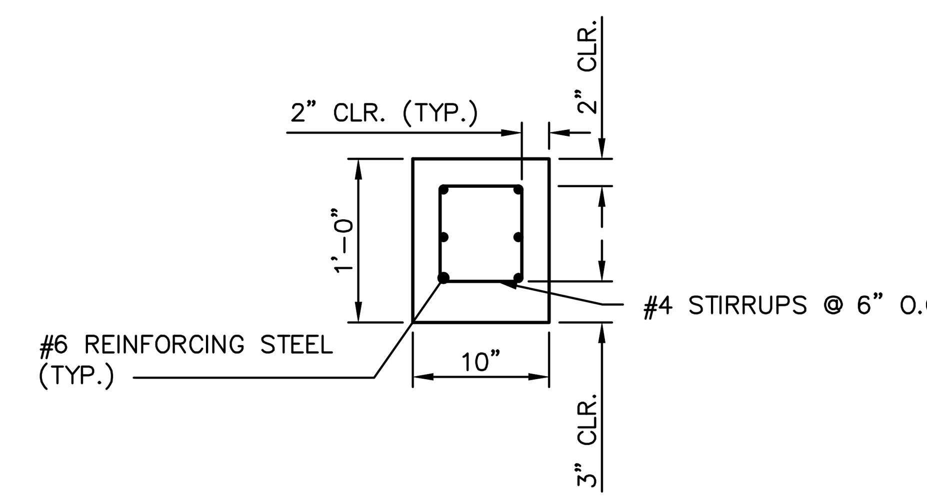

SECTION 4/S-1

SCALE: 1" = 1'-0"

GENERAL NOTES:

GENERAL:

1. THE CONTRACTOR SHALL CHECK ALL OTHER DRAWINGS AND SPECIFICATIONS FOR ADDITIONAL INFORMATION NOT INDICATED ON THE STRUCTURAL DRAWINGS.
2. THE CONTRACTOR SHALL SUPPLY ALL NECESSARY BRACING TO MAINTAIN STABILITY DURING CONSTRUCTION.
3. CONTAINMENT AND WET WELL SHALL BE LEAK TESTED AT FULL DEPTH. NO LEAKAGE SHALL BE PERMITTED.
4. ALL STEEL TO BE HOT-DIPPED GALVANIZED G90 OR GREATER. ALL FASTENERS TO BE STAINLESS STEEL

DESIGN LOADS:
DEAD LOADS:
ROOF DEAD LOAD 10 PSF
LIVE LOADS:
FLOOR/SLAB LOAD 100 PSF

SNOW LOAD:
GROUND SNOW LOAD, Pg = 40 PSF
SNOW EXPOSURE FACTOR, Ce = 1.0
THERMAL FACTOR Ct= 1.2
SNOW LOAD IMPORTANCE FACTOR, Is = 1.0
FLAT ROOF SNOW LOAD, Pf = 33.6 PSF
SLOPED ROOF FACTOR, Cs = 1.0
SLOPED ROOF SNOW LOAD, Ps = 33.6 PSF

WIND LOAD:
BASIC WIND SPEED (3-SECOND GUST) = 90 MPH
WIND IMPORTANCE FACTOR, Iw = 1.0
WIND EXPOSURE C

SEISMIC CRITERIA:
SEISMIC USE GROUP I
SEISMIC IMPORTANCE FACTOR, Ie = 1.0
SITE CLASS D
DESIGN SPECTRAL RESPONSE ACCELERATION
FOR SHORT PERIODS, Sds = 13.4%g
AT 1-SECOND PERIOD, Sd1 = 09.0%g
SEISMIC DESIGN CATEGORY B

CONCRETE:

1. DESIGN STRENGTH -
   STRUCTURAL CONCRETE AND SLAB ON GRADE - 4,000 PSI @ 28 DAYS
2. STANDARDS -
   DESIGN ACI 318 - LATEST EDITION
   DETAILS ACI 315 - LATEST EDITION
3. REINFORCING -
   MESH - ASTM A-185 (FLAT SHEETS)
   BARS - ASTM A-615 GRADE 60
4. AIR CONTENT - ALL SLAB ON GRADE AND EXTERIOR CONCRETE SHALL BE AIR ENTRAINED IN ACCORDANCE WITH SPECIFICATION SECTION 03300.
5. CONCRETE COVER OVER BARS:
   CONCRETE DEPOSITED ON GROUND - 3"
   FORMED CONCRETE EXPOSED TO GROUND, WEATHER OR WATER - 2"
   WALLS & SLABS NOT DIRECTLY EXPOSED TO GROUND, WATER OR WEATHER - 1"
6. SPLICES IN REINFORCEMENT:
   UNLESS OTHERWISE NOTED, ALL SPLICES AND ANCHORAGES SHALL BE IN ACCORDANCE WITH ACI 318 CHAPTER 12. STAGGER SPLICES WHEREVER POSSIBLE AND LOCATE SO AS NOT TO IMPAIR STRENGTH OF MEMBERS.
7. ALL EXPOSED EDGES OF CONCRETE SHALL HAVE A 1" CHAMFER.
8. THE CONTRACTOR SHALL NOT POUR ANY CONCRETE PRIOR TO INSPECTION OF THE REINFORCING STEEL AND AUTHORIZATION BY THE ENGINEER.
9. CEMENTITIOUS WATERPROOFING MATERIAL: SHALL BE AN APPROVED NON-TOXIC WATERPROOFING SYSTEM HAVING ACTIVE CHEMICALS CAUSING A CATALYTIC REACTION GENERATING NON-SOLUBLE CRYSTALLINE FORMATIONS OF DENDRITIC FIBERS WITHIN THE PORES AND CAPILLARY TRACTS OF THE CONCRETE TO BE WATERPROOFED, PERMANENTLY SEALING THE CONCRETE SURFACES AGAINST PENETRATION OF LIQUIDS.
   - MINIMUM PENETRATION DEPTH OF CRYSTALLINE FORMATIONS ON TREATED CONCRETE SHALL BE 2" AS EVIDENCED BY PHOTOGRAPHS FROM INDEPENDENT LABORATORY TESTS USING A SCANNING ELECTRON MICROSCOPE.
   - INDEPENDENT TESTING OF TREATED TWO INCH THICK CONCRETE SAMPLES WITH F'C = 2,000 PSI AND NO ADMIXTURES (MAX. COAT THICKNESS OF 0.05 INCHES WITH A MAXIMUM OF TWO COATS) IN ACCORDANCE WITH US ARMY CORPS OF ENGINEERS CRD-C48-73 "PERMEABILITY OF CONCRETE" TESTED TO 175 PSI SHALL EXHIBIT NO MEASURABLE LEAKAGE.
   - INDEPENDENT TESTING OF TREATED TWO INCH THICK CONCRETE SAMPLES WITH F'C = 4,000 PSI AND NO ADMIXTURES (MAX. COAT THICKNESS OF 0.05 INCHES WITH A MAXIMUM OF TWO COATS) IN ACCORDANCE WITH ASTM C 267-77 "CHEMICAL RESISTANCE OF MORTARS" AND ASTM C 39-86 "COMPRESSIVE STRENGTH OF CYLINDRICAL CONCRETE SPECIMENS". TREATED SAMPLES SHALL BE IMMERSED IN HYDROCHLORIC ACID (3.5 PH), BRAKE FLUID, TRANSFORMER OIL, ETHYLENE GLYCOL, TOLUENE, AND CAUSTIC SODA EACH FOR A MINIMUM DURATION OF 84 DAYS. SPECIMEN SAMPLES SHALL EXHIBIT NO DETRIMENTAL EFFECTS AFTER EXPOSURE AND SHALL HAVE A MINIMUM OF 14% INCREASE IN COMPRESSIVE STRENGTH COMPARED TO NON-TREATED SAMPLES.
   - PROVIDE CEMENTITIOUS WATERPROOFING MATERIAL TYPE: XPEX CONCENTRATE, AS MANUFACTURED BY XYPEX CHEMICAL CORPORATION, OR EQUAL. PROPORTIONING OF WATERPROOFING MATERIALS AND APPLICATION SHALL BE IN STRICT ACCORDANCE WITH THE APPROVED MANUFACTURER'S REQUIREMENTS.
10. INTEGRAL WATERPROOFING ADMIXTURE: SHALL BE AN APPROVED NON-TOXIC WATERPROOFING SYSTEM HAVING ACTIVE CHEMICALS CAUSING A CATALYTIC REACTION GENERATING PERMANENT FIXED NON-SOLUBLE CRYSTALLINE STRUCTURE FORMATION THROUGHOUT THE PORES AND CAPILLARY TRACTS OF THE CONCRETE TO BE WATERPROOFED, PERMANENTLY SEALING THE CONCRETE AGAINST PENETRATION OF LIQUIDS FROM ANY DIRECTION, AND PROTECTING THE CONCRETE FROM DETERIORATION DUE TO HARSH ENVIRONMENTAL CONDITIONS.
    - PENETRATION OF CRYSTALLINE FORMATIONS UNIFORM AND INTEGRAL THROUGHOUT THE CONCRETE MATRIX ON TREATED CONCRETE SAMPLES SHALL BE EVIDENCED BY PHOTOGRAPHS FROM INDEPENDENT LABORATORY TESTS USING A SCANNING ELECTRON MICROSCOPE.
    - INDEPENDENT TESTING OF TREATED TWO INCH THICK CONCRETE SAMPLES WITH F'C = 4,000 PSI AND NO ADMIXTURES (MAX. COAT THICKNESS OF 0.05 INCHES WITH A MAXIMUM OF TWO COATS) IN ACCORDANCE WITH US ARMY CORPS OF ENGINEERS CRD-C48-73 "PERMEABILITY OF CONCRETE" TESTED TO 150 PSI SHALL EXHIBIT NO MEASURABLE LEAKAGE.
    - INDEPENDENT TESTING OF TREATED CONCRETE SAMPLES WITH NO ADMIXTURES, SHALL BE PERFORMED TO DETERMINE "SULFURIC ACID RESISTANCE OF CONCRETE SPECIMENS". TREATED CONCRETE (DOSAGE RATES OF 3%, 5% AND 7%) SHALL BE TESTED AGAINST UNTREATED CONCRETE. ALL SAMPLES SHALL BE IMMERSED IN SULFURIC ACID AND WEIGHED DAILY UNTIL THE UNTREATED SAMPLE REACHES A WEIGHT LOSS OF 50% OR MORE. TREATED AND UNTREATED SAMPLE WEIGHTS SHALL BE DOCUMENTED AND SUBMITTED.
    - INDEPENDENT TESTING OF TREATED CONCRETE SAMPLES WITH NO ADMIXTURES IN ACCORDANCE WITH ASTM C 39-86 "COMPRESSIVE STRENGTH OF CYLINDRICAL CONCRETE SPECIMENS". TREATED SAMPLES SHALL HAVE A MINIMUM OF 10% INCREASE IN COMPRESSIVE STRENGTH COMPARED TO NON-TREATED SAMPLES.
    - PROVIDE CEMENTITIOUS WATERPROOFING MATERIAL TYPE: XPEX ADMIX, AS MANUFACTURED BY XYPEX CHEMICAL CORPORATION, OR EQUAL. PROPORTIONING OF WATERPROOFING MATERIALS AND APPLICATION SHALL BE IN STRICT ACCORDANCE WITH THE APPROVED MANUFACTURER'S REQUIREMENTS.
11. SUBMIT TO THE ENGINEER FOR REVIEW TEST REPORTS FROM INDEPENDENT LABORATORY TESTS CERTIFYING THAT THE WATERPROOFING SYSTEM MATERIALS CONFORM TO THE PERFORMANCE CHARACTERISTICS AND TESTING REQUIREMENTS SPECIFIED, ALONG WITH MANUFACTURER'S PRODUCT INFORMATION INCLUDING SPECIFICATIONS, INSTALLATION INSTRUCTIONS, AND GENERAL INSTRUCTIONS FOR PRODUCT APPLICATION.
12. WATERPROOFING SYSTEM MATERIALS SHALL BE FROM ONE MANUFACTURER.

NO ALTERATION PERMITTED HEREON EXCEPT AS PROVIDED UNDER SECTION 7209 SUBDIVISION 2 OF THE NEW YORK STATE EDUCATION LAW.

COMPLETED CONSTRUCTION

Significant Construction Changes Are Shown

By ______ Date ______
Ck'd ______ Date ______

REVISIONS

TOWN OF VESTAL
ROBERT STREET STORMWATER PUMPING STATION
CONTRACT 1A - GENERAL CONSTRUCTION

CONCRETE SLAB PLAN & DETAILS

BROOME COUNTY, NEW YORK

TOWN OF VESTAL

Barton & Loguidice, D.P.C.

75% SUBMISSION

NOT FOR CONSTRUCTION 6/10/16

Date: JUNE 10, 2016
Scale: AS SHOWN
Sheet Number: S-1
Project Number: 409.002

Plotted: Jun 09, 2016 - 5:19PM SYR By: rdo
Z:\BL-Vault\ID2\18217AD2-1C71-4823-8927-99D5C4054147\0\992000-992999\992003\L\L\409002 S01 Concrete Slab Plan and Details (ID 992003).dwg
Checked by INITIALS Drawn by GRR Designed by RDO In charge of INITIALS

LEGEND

LINEWEIGHT AND LINETYPE DESIGNATIONS

	EXISTING U.O.I.
	PROPOSED TO BE PROVIDED U.O.I.
— OE —	OVERHEAD ELECTRIC
—UGE—	UNDERGROUND ELECTRIC
	REINFORCED CONCRETE ENCASED CONDUIT

BASIC DRAWING SYMBOLS

DB-01	UNDERGROUND DUCT BANK DESIGNATION
1	DRAWING SPECIFIC NOTE
1	CIRCUIT DESIGNATION, SEE CIRCUIT SCHEDULE
	REMOVALS
	UNSWITCHED CONTINUATION CIRCUIT
	SWITCHED CONTINUATION CIRCUIT
1	CIRCUIT NUMBER
	HOME RUN, 2#12 & 1#12GND IN 3/4"C TO A 20A,1P CIRCUIT BREAKER IN DESIGNATED PANEL U.O.I.
LP-1	PANEL DESIGNATION

POWER DISTRIBUTION

	UTILITY POLE
	GENERATOR
M	SELF CONTAINED METER
M	METER CONNECTION WITH CURRENT TRANSFORMERS
	TRANSFORMER
T	TRANSFORMER
	AUTOMATIC TRANSFER SWITCH
ATS	AUTOMATIC TRANSFER SWITCH
	PANELBOARD

SWITCHES AND OVER CURRENT PROTECTION

	NON-FUSIBLE/SAFETY DISCONNECT
	FUSIBLE/SAFETY DISCONNECT
	CIRCUIT BREAKER
	FUSE
	DISCONNECT SWITCH
	FUSED DISCONNECT SWITCH
	FUSE CUTOUT
	CUTOUT

GROUNDING

	GROUND
	GROUND ROD

WIRING METHODS

	GAS/WATER TIGHT PENETRATION
	INSULATED BUSHING OR CONDUIT STUB
	CONDUIT SEAL OFF
	CONDUIT UNION
	FLEXIBLE CONNECTION
	COILED SLACK
~	CONTINUATION
JB	JUNCTION BOX
HH-1	HAND HOLE, ITEM NUMBER
ES	EMERGENCY STOP

ELECTRICAL CONNECTIONS, MOTORS, AND MOTOR STARTERS

M	MOTOR
#	MOTOR (NUMBER INDICATES HORSEPOWER)
	HARD-WIRED EQUIPMENT CONNECTION
VFD	VARIABLE FREQUENCY DRIVE (VFD)
MS	MANUAL MOTOR STARTER
	COMBINATION MAG. MOTOR STARTER W/ FUSIBLE SWITCH,
	MAGNETIC MOTOR STARTER (FNR)

SENSORS & TRANSMITTERS

¢XXX-X	CONTROL DEVICE OR STATION, TYPE, ITEM NUMBER

POWER DEVICES

	DUPLEX RECEPTACLE
	QUADPLEX RECEPTACLE
XX-XXR	SPECIAL RECEPTACLE, NEMA CONFIGURATION AS NOTED.

TELEPHONE/DATA

	SINGLE DEVICE WALL MOUNT DATA BOX
	SINGLE DEVICE WALL MOUNT TELEPHONE BOX
#D#T	MULTI DEVICE WALL MOUNT BOX (#D INDICATES NUMBER OF DATA JACKS, #T INDICATES NUMBER OF TELEPHONE JACKS)
WAP	WALL-MOUNTED WIRELESS ACCESS POINT
DR	DATA RACK

LIGHTING (REFER TO LIGHTING FIXTURE SCHEDULE FOR FIXTURE TYPES)

$	SWITCH: 125V, 20A, HEAVY DUTY
	LIGHT FIXTURE WITH EMERGENCY BATTERY PACK/CONNECTED TO EMERGENCY POWER (TYP FOR ALL SIZES & TYPES)
	2'x4' LIGHT FIXTURE (TYP. FOR ALL SIZE & TYPE OF LIGHT FIXTURES)
OC/C	CEILING MOUNTED OCCUPANCY/MOTION SENSOR
	WALL MOUNTED INDOOR LIGHTING FIXTURE
	WALL PACK, OUTDOOR LIGHTING FIXTURE
	EXIT LIGHT FIXTURE, CEILING MOUNTED, SINGLE FACE
	EXIT LIGHT FIXTURE, WALL MOUNTED, ARROWS AS INDICATED
	EMERGENCY LIGHTING UNIT, REMOTE BATTERY
E	EMERGENCY LIGHTING UNIT, INTEGRAL BATTERY
	SITE LIGHTING FIXTURE, TWIN POLE MOUNTED
	SITE LIGHTING FIXTURE, SINGLE POLE MOUNTED

CONTROL DEVICES

	CONTACTOR (NO)
	CONTACTOR (NC)
	TEMPERATURE ACTUATED SWITCH (OPEN)
	TEMPERATURE ACTUATED SWITCH (CLOSED)
	PUSH BUTTON (OPEN)
	PUSH BUTTON (CLOSED)
	OVERLOAD RELAY
	SOLENOID
R	RELAY
	PUSH BUTTON

FIRE ALARM

FACP	FIRE ALARM CONTROL PANEL
FAAP	FIRE ALARM ANNUNCIATOR PANEL
S	SMOKE DETECTOR
H	HEAT DETECTOR
DS	DUCT SMOKE DETECTOR
F	PULL STATION
FSD	FIRE ALARM FAN SHUT-DOWN
F	NOTIFICATION DEVICE – STROBE
F	NOTIFICATION DEVICE – HORN/STROBE

SECURITY/ACCESS CONTROL

DC	DOOR CONTACT
MD	MOTION DETECTOR
CR	CARD READER
KP	KEY PAD
DS	DOOR STRIKE
ML	MAGNETIC LOCK
S	NOTIFICATION DEVICE – HORN/STROBE

CCTV (REFER TO CCTV CAMERA SCHEDULE FOR CAMERA TYPES)

C*	CCTV CAMERA (C* INDICATES TYPE)

ABBREVIATIONS

ϕ	PHASE	MCB	MAIN CIRCUIT BREAKER
A	AMPERE	MCA	MINIMUM CIRCUIT AMPACITY
AF	AMP FRAME	MCP	MAIN CONTROL PANEL
AFF	ABOVE FINISHED FLOOR	MDP-#	MAIN DISTRIBUTION PANEL WITH ITEM NUMBER
AFG	ABOVE FINISHED GRADE	MDS-#	MAIN DISCONNECT WITH ITEM NUMBER
AHJ	AUTHORITY HAVING JURISDICTION	MFR	MANUFACTURER
ANSI	AMERICAN NATIONAL STANDARDS INSTITUTE	MH	MOUNTING HEIGHT
AT	AMP TRIP	MIN	MINIMUM
ATS	AUTOMATIC TRANSFER SWITCH	MS	MOTOR STARTER
AXL	ACROSS THE LINE	N	NEUTRAL
C	CONDUIT	NC	NORMALLY CLOSED
CB	CIRCUIT BREAKER	NEC	NATIONAL ELECTRIC CODE
CKT	CIRCUIT	NFPA	NATIONAL FIRE PROTECTION ASSOCIATION
CL	CURRENT LIMITING	NO	NORMALLY OPEN
CONC	CONCRETE	P	POLE
CONST	CONSTRUCTION	PH	PHASE
CONT	CONTRACT	PRI	PRIMARY
CP	CONTROL PANEL	PROV	PROVIDED (FURNISHED AND INSTALLED)
CT	CURRENT TRANSFORMER	PT	POTENTIAL TRANSFORMER
CU	COPPER	PVC	POLYVINYL CHLORIDE
DB-#	DUCT BANK WITH ITEM NUMBER	PWR	POWER
DED	DEDICATED	QTY	QUANTITY
DIV	DIVISION	RGS	RIGID GALVANIZED STEEL
DP-#	DISTRIBUTION PANEL WITH ITEM NUMBER	SEC	SECONDARY
DS-#	DISCONNECT WITH ITEM NUMBER	SPEC	SPECIFICATION
DWG	DRAWING	SS	STAINLESS STEEL
EA	EACH	ST	SHUNT TRIP
EC	ELECTRICAL CONTRACTOR	STP	SHIELDED TWISTED PAIR
ETR	EXISTING TO REMAIN	SWBD	SWITCHBOARD
FLA	FULL LOAD AMPACITY	THK	THICK
FT	FEET	TRT	TREATED
FURN	FURNISHED	TVSS	TRANSIENT VOLTAGE SURGE SUPPRESION
FD	FUSED DISCONNECT	TYP	TYPICAL
GFI/GFCI	GROUND FAULT CIRCUIT INTERRUPTER	UG/E	UNDERGROUND ELECTRIC
GND	GROUND	UL	UNDERWRITER'S LABORATORIES
HD	HEAVY DUTY	UOI	UNLESS OTHERWISE INDICATED
HH-1	HAND HOLE WITH ITEM NUMBER	UPS	UNINTERRUPTIBLE POWER SUPPLY
HOA	HAND-OFF-AUTO SELECTOR SWITCH	UV	ULTRA VIOLET
HP	HORSEPOWER	V	VOLTAGE
JB	JUNCTION BOX	VA	VOLT AMPERES
kAIC	1000 AMPERE INTERRUPTING CAPACITY	VFD	VARIABLE FREQUENCY DRIVE
kCMIL	1000 CIRCULAR MILS	VR	VANDAL RESISTANT – PADLOCKABLE
kW	KILOWATT	W/	WITH
LED	LIGHT EMITTING DIODE	W	WIRE
LDPE	LOW DENSITY POLYETHYLENE	WP	WEATHERPROOF
LOC	LOCATION	WT	WATERTIGHT
LP	LIGHTING PANEL WITH ITEM NUMBER	XFMR	TRANSFORMER

TYPICAL BRANCH DEVICE INFORMATION

MOUNTING HEIGHT (ABOVE FINISHED FLOOR)

48"

AC GFI

DEVICE TYPE & OTHER DEVICE SPECIFIC INFORMATION (REFER TO ABBREVIATIONS LIST)

TYPICAL BRANCH DEVICE

GENERAL NOTES

SYMBOLS AND ABBREVIATIONS
1. THIS SHEET CONTAINS SYMBOLS AND ABBREVIATIONS TYPICALLY SHOWN ON ELECTRICAL DRAWINGS AND SCHEMATICS. THIS CONTRACT DRAWING SET MAY NOT CONTAIN ALL SYMBOLS AND ABBREVIATIONS SHOWN ON THIS SHEET.

UTILITY
1. ELECTRICAL UTILITY COMPANY WHICH SERVICES THE SITES IS NYSEG. COORDINATE ALL WORK WITH UTILITY. REFERENCE ELECTRIC SERVICE ORDER #10300226296.

PERMITS AND INSPECTIONS
1. THE CONTRACTOR SHALL OBTAIN ALL REQUIRED PERMITS AND ARRANGE FOR ALL REQUIRED INSPECTIONS IN ACCORDANCE WITH STATE AND LOCAL GOVERNING AUTHORITIES.
2. ALL WORK SHALL BE DONE IN ACCORDANCE WITH NEC, AND STATE AND LOCAL GOVERNING REGULATIONS.

SCOPE
1. UNLESS OTHERWISE INDICATED, PROVIDE A COMPLETE AND OPERATIONAL ELECTRICAL SYSTEM INCLUDING ALL NECESSARY MATERIAL, LABOR, AND EQUIPMENT.
2. ALL DISCONNECTS REQUIRED BY CODE MAY NOT BE SHOWN. CONTRACTOR SHALL PROVIDE ALL NECESSARY DISCONNECTS AND OVERCURRENT PROTECTIVE DEVICES.
3. ALL EQUIPMENT AND MATERIAL SHALL BE LABELED AND LISTED, AND INSTALLED IN ACCORDANCE WITH THEIR LISTING.
4. PROVIDE ELECTRICAL POWER WIRING TO ALL MECHANICAL EQUIPMENT.

COORDINATION OF WORK
1. THE CONTRACTOR SHALL COORDINATE AND VERIFY THAT WORKING AND DEDICATED EQUIPMENT SPACE REQUIREMENTS ARE MET PER NEC AND AHJ.
2. FIELD LOCATE ALL CORE DRILL LOCATIONS.
3. BEFORE CUTTING OR DRILLING INTO BUILDING ELEMENTS INSPECT AND LAYOUT WORK TO AVOID DAMAGING STRUCTURAL ELEMENTS AND BUILDING UTILITIES.
4. BEFORE SELECTING MATERIAL AND EQUIPMENT, AND PROCEEDING WITH WORK, INSPECT AREAS WHERE MATERIAL AND EQUIPMENT ARE TO BE INSTALLED TO INSURE SUITABILITY, AND CHECK NEEDED SPACE FOR PLACEMENT, CLEARANCES AND INTERCONNECTIONS.
5. COORDINATION OF POSSIBLE SYSTEM SHUT-DOWNS AND WORK AREAS SHALL BE COORDINATED WITH THE OWNER.
6. VERIFY RECEPTACLE, SWITCH, & COVER PLATE COLORS WITH OWNER.
7. TURN OVER TO THE OWNER ALL MANUFACTURER'S WARRANTIES FOR EQUIPMENT AND MATERIALS PROVIDED.

DEFINITIONS
1. THE DEFINITION OF ELECTRICAL TERMS USED SHALL BE AS DEFINED IN THE EDITION OF THE NATIONAL ELECTRIC CODE (NEC) AS REFERENCED IN THE BUILDING CODE OF NEW YORK STATE.
2. THE TERM "INDICATED" SHALL MEAN "AS SHOWN ON CONTRACT DOCUMENTS (SPECIFICATIONS, DRAWINGS, AND RELATED ATTACHMENTS)".
3. THE TERM "PROVIDE" SHALL MEAN "TO FURNISH, INSTALL, AND CONNECT COMPLETELY".
4. THE TERM "SIZE" SHALL MEAN ONE OR MORE OF THE FOLLOWING: "LENGTH, CURRENT AND VOLTAGE RATING, NUMBER OF POLES, NEMA SIZE, AND OTHER SIMILAR ELECTRICAL CHARACTERISTICS".

PLANS
1. ELECTRICAL PLANS, DETAILS, AND ONE LINE DIAGRAMS SHOW THE GENERAL LOCATION AND ARRANGEMENT OF THE ELECTRICAL SYSTEM. THEY ARE DIAGRAMMATIC AND DO NOT SHOW ALL CONDUIT BODIES, CONNECTORS, BENDS, FITTINGS, HANGERS, AND ADDITIONAL PULL BOXES WHICH THE CONTRACTOR MUST PROVIDE TO COMPLETE THE ELECTRICAL SYSTEM.
2. ELECTRICAL PLANS AND DETAILS DO NOT SHOW ALL INTERFERENCES AND CONDITIONS, VISIBLE AND/OR HIDDEN, THAT MAY EXIST; THUS REQUIRING THE CONTRACTOR TO INSPECT AND SURVEY THE SPACE BEFORE PERFORMING THE WORK.
3. THE ENGINEER SHALL BE NOTIFIED IN WRITING OF ANY CONDITIONS THAT VARY FROM THOSE SHOWN ON THE PLANS. THE CONTRACTOR'S WORK SHALL NOT VARY FROM THE PLANS WITHOUT THE EXPRESSED APPROVAL OF THE ENGINEER AND OWNER.

METHODS
1. ALL EXTERIOR CONDUITS TO HAVE DUCT SEAL INSTALLED AT ALL ENDS, BOXES, WEATHERHEADS, PENETRATIONS TO INTERIOR SPACES, ETC.
2. DUCT BANKS SHALL NOT BE ROUTED DIRECTLY ABOVE OR BELOW EXISTING/PROPOSED UTILITIES EXCEPT WHEN CROSSING. WHERE CROSSING EXISTING OR PROPOSED UTILITIES DUCT BANKS SHALL CROSS AT 90 DEGREE ANGLES.
3. ALL CONDUIT SYSTEMS EXPOSED TO TEMPERATURE DIFFERENTIALS, IN POTENTIALLY CONDENSING ATMOSPHERES, EXTERIOR INSTALLED, OR INSTALLED UNDERGROUND SHALL HAVE PROVISIONS FOR DRAINING WATER OUT OF CONDUIT SYSTEMS.

EXTERIOR/UNDERGROUND UTILITIES
1. UNDERGROUND UTILITY LOCATIONS ARE NOT GUARANTEED, NOR IS THERE ANY GUARANTEE THAT ALL EXISTING UTILITIES WHETHER FUNCTIONAL OR ABANDONED WITHIN THE PROJECT AREA ARE SHOWN ON THESE DRAWINGS.
2. THE CONTRACTOR SHALL DETERMINE THE EXACT LOCATION OF ALL UNDERGROUND UTILITIES BEFORE BEGINNING WORK & SHALL BE RESPONSIBLE FOR ALL DAMAGE RESULTING FROM HIS/HER WORK.
3. THE CONTRACTOR SHALL NOTIFY "DIG SAFELY NEW YORK" 1-800-962-7962 PRIOR TO ANY EXCAVATION.
4. CONTRACTOR SHALL PROTECT ALL EXISTING STORM WATER DRAINAGE FACILITIES, INCLUDING PIPES, DRAINAGE STRUCTURES, SWALES, DITCHES, ETC. CONTRACTOR SHALL REPLACE AND RESTORE ANY AND ALL OF THESE FACILITIES, AFFECTED BY CONSTRUCTION ACTIVITIES, AT NO ADDITIONAL COST TO THE OWNER.
5. RESTORE ALL SURFACES TO AS GOOD OR BETTER CONDITION THAN BEFORE CONSTRUCTION AS SOON AS POSSIBLE FOLLOWING COMPLETION OF WORK IN ANY AREA.
6. THE CONTRACTOR SHALL BECOME FAMILIAR WITH SITE CONDITIONS AND SHALL INCLUDE PROVISIONS TO AVOID CONFLICTS WITH AND/OR RESTORE SITE FEATURES IN THE BID.

NO ALTERATION PERMITTED HEREON EXCEPT AS PROVIDED UNDER SECTION 7209 SUBDIVISION 2 OF THE NEW YORK STATE EDUCATION LAW.

COMPLETED CONSTRUCTION

Significant Construction Changes Are Shown

By ______ Date ______

Ck'd ______ Date ______

REVISIONS

TOWN OF VESTAL

ROBERT STREET STORMWATER PUMPING STATION

CONTRACT 1B – ELECTRICAL CONSTRUCTION

ELECTRICAL LEGEND, ABBREVIATIONS AND GENERAL NOTES

TOWN OF VESTAL BROOME COUNTY, NEW YORK

Barton & Loguidice, D.P.C.

75% SUBMISSION

NOT FOR CONSTRUCTION 6/10/16

Date: JUNE, 2016

Scale: AS SHOWN

Sheet Number: E1

Project Number: 409.002

Plotted: Jun 09, 2016 – 5:21PM SYR By: rdo

Z:\BL-Vault\ID2\18217AD2-1C71-4823-8927-99D5C4054147\0\990000-990999\990362\L\L\409002 E Drawings (ID 990362).dwg

Checked by INITIALS Drawn by DMS Designed by DMS In charge of INITIALS

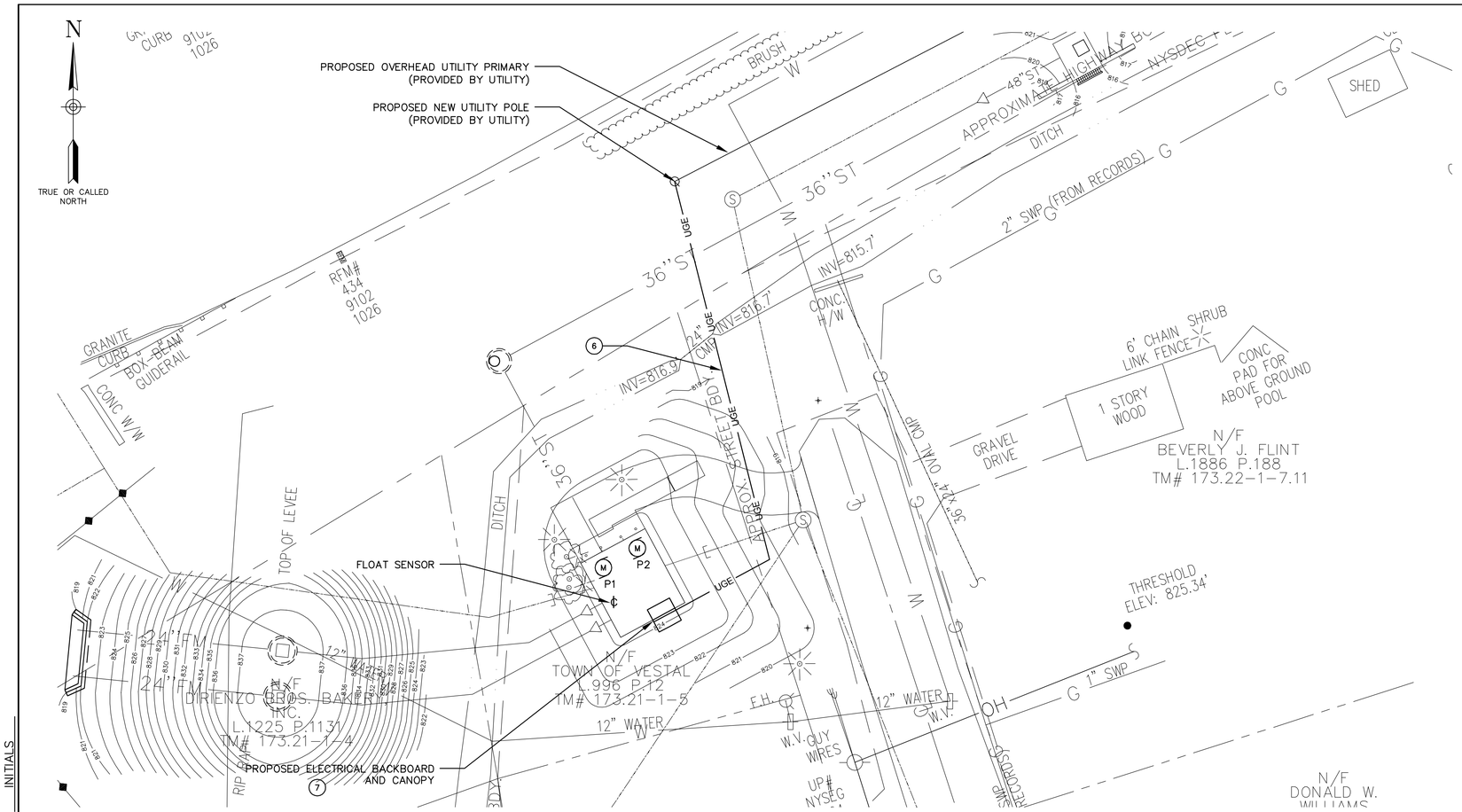

SITE PLAN

SCALE: 1/16" = 1'-0"

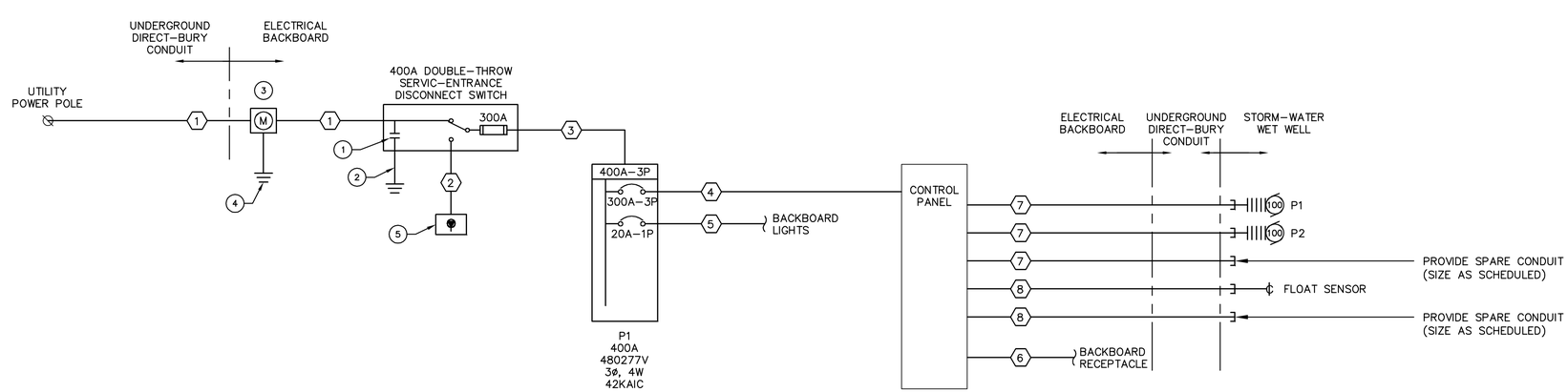

POWER & CONTROL ONE-LINE DIAGRAM

SCALE: NTS

GENERAL NOTES

1. PROVIDE GROUNDING PER NEC FOR ALL ELECTRICAL EQUIPMENT AND ASSOCIATED EQUIPMENT.
2. ALL CONDUCTORS NOT NECESSARILY SHOWN FOR CLARITY.
3. ONE-LINE DIAGRAMS ARE INTENDED FOR DIAGRAMMATIC PURPOSES ONLY. REFER TO PLANS FOR EQUIPMENT LOCATIONS, FEEDER RUN LENGTHS, ETC.
4. UNLESS NOTED OTHERWISE, ALL EXTERIOR EQUIPMENT SHALL BE PROVIDED IN NEMA 3R RATED, LOCKABLE ENCLOSURES. KEY ALL LOCKS IDENTICAL PER OWNER'S LOCK SCHEME.
5. PROVIDE VERTICAL STRAIN RELIEF FOR ALL CABLE/CONDUCTORS.

KEYED NOTES

1. PROVIDE TYPE 1 SURGE ARRESTOR SUITABLE FOR INSTALLED SERVICE AS MANUFACTURED BY SQUARE-D OR APPROVED EQUAL. INSTALL AT SERVICE DISCONNECT AS SHOWN. COORDINATE EXACT CONNECTION POINT WITH UTILITY.
2. PROVIDE SERVICE-ENTRANCE GROUNDING PER DETAILS, SPECIFICATIONS, AND ALL NEC REQUIREMENTS.
3. PROVIDE 400A (320A RATED CONTINUOUS DUTY) SELF-CONTAINED METER.
4. GROUND AT METER PER UTILITY STANDARDS.
5. PROVIDE 400A RATED POSI-LOCK E0400 SERIES CONNECTION PANEL FOR CONNECTION TO PORTABLE GENERATOR.
6. PROVIDE SCHEDULED CONDUCTORS IN UNDERGROUND DIRECT-BURY CONDUIT. COORDINATE EXACT CONDUIT ROUTING WITH EXISTING SITE CONDITIONS, OTHER TRADES, AND FINAL UTILITY POLE PLACEMENT BY UTILITY.
7. PROVIDE EQUIPMENT BACKBOARD AND CANOPY FOR MOUNTING OF ELECTRICAL EQUIPMENT. REFER TO DETAILS FOR ADDITIONAL INFORMATION.

NO ALTERATION PERMITTED HEREON EXCEPT AS PROVIDED UNDER SECTION 7209 SUBDIVISION 2 OF THE NEW YORK STATE EDUCATION LAW.

COMPLETED CONSTRUCTION

Significant Construction Changes Are Shown

By _____ Date _____

Ck'd _____ Date _____

REVISIONS

TOWN OF VESTAL
ROBERT STREET STORMWATER PUMPING STATION
CONTRACT 1B - ELECTRICAL CONSTRUCTION

SITE PLAN & POWER ONE-LINE DIAGRAM

TOWN OF VESTAL BROOME COUNTY, NEW YORK

Barton & Loguidice, D.P.C.

75% SUBMISSION

NOT FOR CONSTRUCTION 6/10/16

Date JUNE, 2016

Scale AS SHOWN

Sheet Number E2

Project Number 409.002

Plotted: Jun 10, 2016 - 1:04PM SYR By: grr
Z:\BL-Vault\02\18217A02-1C71-4823-8927-99056405417\0\990000-990999\990362\L\L\409002 E Drawings (ID 990362).dwg

Checked by INITIALS Drawn by DMS Designed by DMS In charge of INITIALS

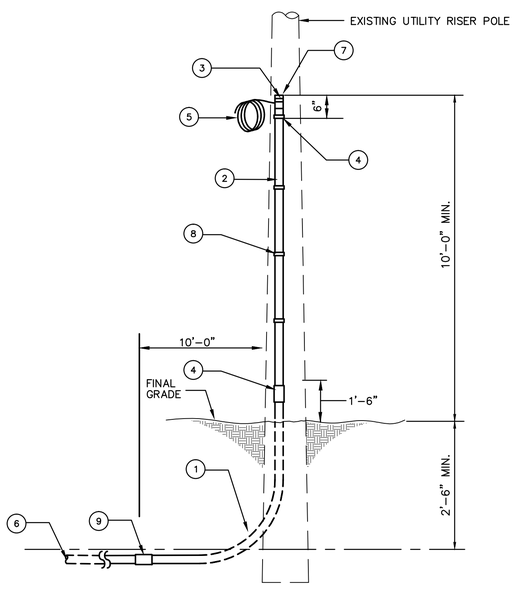

KEYED NOTES, TYPICAL RISER POLE DETAIL:

1. 42" RADIUS CONDUIT ELBOWS. (TYPICAL)
2. 4" DIAMETER RGS CONDUIT (OR OTHER PROTECTION MEASURES AS REQUIRED BY UTILITY) WITH PIPE STRAP. REFER TO CIRCUIT SCHEDULE FOR ADDITIONAL INFORMATION.
3. POWER COMPANY APPROVED GROUNDING, INSULATED BUSHING BONDED TO #4 GROUND CONDUCTOR. (TYPICAL)
4. POWER COMPANY APPROVED GROUND CLAMP BONDED TO #4 COPPER GROUND CONDUCTOR. (TYPICAL)
5. COILED SLACK. 30'-0" OF #2 GROUND CONDUCTOR.
6. PROVIDE SPACING UNDERGROUND PER DIRECT-BURIED CONDUIT/DIRECT BURIED CABLE DETAIL. (TYPICAL)
7. PROVIDE SUFFICIENT DRIP LOOP & DUCT SEAL ON CONDUIT TO PREVENT WATER ENTRANCE INTO CONDUIT SYSTEM. (TYPICAL)
8. PROVIDE PIPE STRAPS TO SECURE CONDUIT TO RISER POLE. MAXIMUM SPACING SHALL BE 30" ON CENTER.
9. TRANSITION FROM RGS CONDUIT TO SCHEDULE 80 PVC CONDUIT/DIRECT BURIED CABLE AS INDICATED ON DRAWINGS.

GENERAL NOTES, TYPICAL RISER POLE DETAIL:

1. COORDINATE ALL WORK WITH UTILITY REPRESENTATIVE AND WRITTEN UTILITY SPECIFICATIONS.
2. PROVIDE GROUNDING PER UTILITY REQUIREMENTS.
3. PROVIDE UTILITY-REQUIRED SLACK FOR SECONDARY CONDUCTORS FOR UTILITY CONNECTION.

TYPICAL UTILITY POLE RISER DETAIL

SCALE: NTS

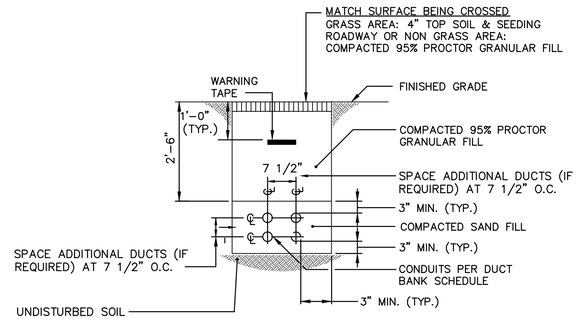

GENERAL NOTES

1. POWER AND CONTROL CONDUITS TO HAVE MINIMUM 12" OF SEPARATION BETWEEN CONDUITS IN DUCT BANK.

DIRECT BURIED CONDUIT DETAIL

SCALE: NTS

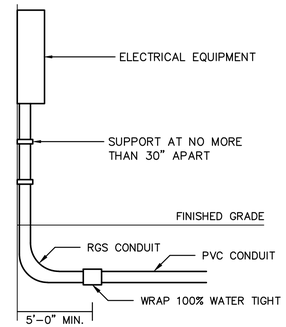

TYPICAL RISING CONDUIT DETAIL

SCALE: NTS

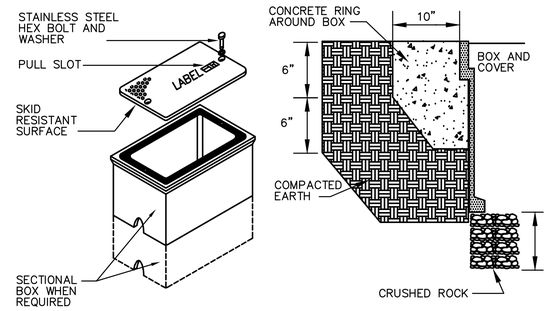

GENERAL NOTES, TYPICAL HAND HOLE DETAIL

1. HANDHOLES USED FOR FIBER OPTIC CABLE SHALL BE DEEP ENOUGH SUCH THAT CONDUIT ENTERS AND EXITS SIDES OF HANDHOLE. NO BENDS IN CONDUIT SYSTEM SHALL BE ALLOWED AT HAND HOLE LOCATION FOR FIBER OPTIC CABLE.
2. CONSTRUCTION SHALL BE A POLYMER CONCRETE REINFORCED WITH A HEAVY WEAVE FIBERGLASS.
3. COMPRESSIVE STRENGTH SHALL 10,250 PSI (MIN) UNLESS OTHERWISE REQUIRED TO MEET MIN. LOAD RATING.
4. COVER AND BOX SHALL WITHSTAND A SERVICE LOAD OF 1500LB OVER A 10" X 10" AREA UOI.
5. COVER AND BOX SHALL BE MIN. AASHTO H20 RATED WHERE LOCATED IN PAVED AREAS.
6. ALL HARDWARE SHALL BE STAINLESS STEEL. PROVIDE SLEEVES FOR ALL PENETRATIONS.
7. BOTTOM SHALL BE OPEN FOR DRAINAGE.

TYPICAL HANDHOLE INSTALLATION

SCALE: NTS

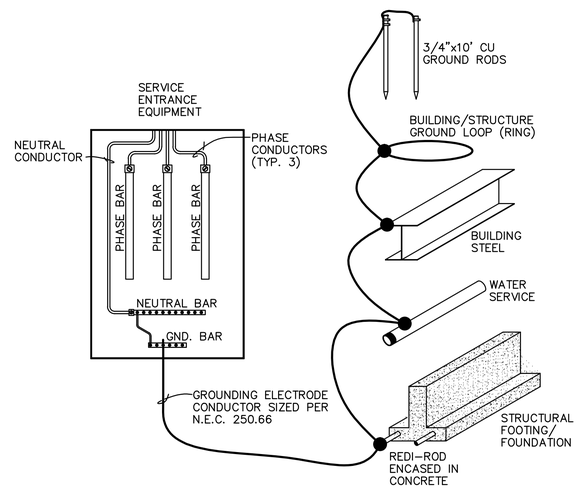

GENERAL NOTES, TYPICAL SERVICE ENTRANCE GROUNDING

1. BOND ALL NORMAL AND EMERGENCY EQUIPMENT TO GROUND RING.
2. NOT ALL GROUNDING SHOWN. PROVIDE ADDITIONAL GROUNDING AS REQUIRED PER SPECIFICATIONS AND NEC.
3. ALL GROUND CONDUCTORS SHALL BE 1/0 COPPER, U.O.I.
4. DETAIL IS TYPICAL AND MAY REFLECT GROUNDING TO OBJECTS NOT PRESENT ON SITE.

TYPICAL SERVICE ENTRANCE GROUNDING

SCALE: NTS

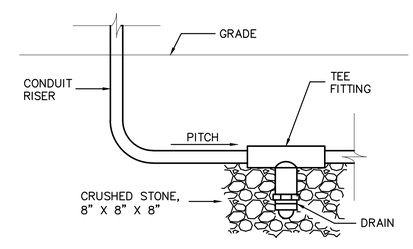

DRAIN BELOW GRADE

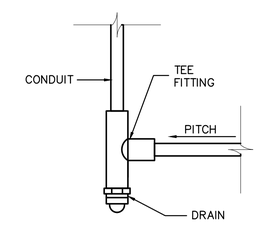

DRAIN ABOVE GRADE
(OR INSIDE MANHOLE/HANDHOLE)

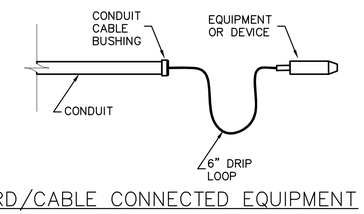

CORD/CABLE CONNECTED EQUIPMENT

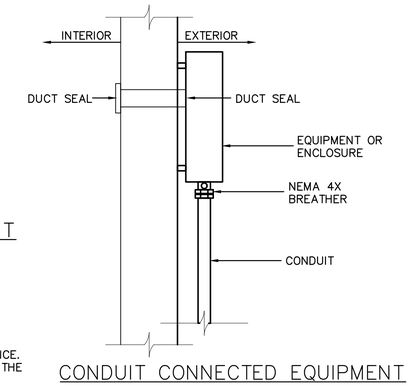

CONDUIT CONNECTED EQUIPMENT

GENERAL NOTES, TYPICAL CONDUIT DRAIN DETAILS

1. ALL CONDUIT SYSTEMS EXPOSED TO TEMPERATURE DIFFERENTIALS, IN POTENTIAL CONDENSING ATMOSPHERES, EXTERIOR INSTALLED, OR INSTALLED UNDERGROUND SHALL HAVE PROVISIONS FOR DRAINING WATER OUT OF CONDUIT SYSTEMS. PROVIDE DRAIN IN CONDUIT SYSTEMS AS LOW POINTS, LOW POINT SHALL NOT BE AT EQUIPMENT OR DEVICE. A BREATHER SHALL BE PROVIDED AT THE HIGH POINT OF THE SYSTEM.

TYPICAL CONDUIT DRAIN DETAILS

SCALE: NTS

NO ALTERATION PERMITTED HEREON EXCEPT AS PROVIDED UNDER SECTION 7209 SUBDIVISION 2 OF THE NEW YORK STATE EDUCATION LAW.

COMPLETED CONSTRUCTION

Significant Construction Changes Are Shown

By _____ Date _____

Ck'd _____ Date _____

REVISIONS

TOWN OF VESTAL

ROBERT STREET STORMWATER PUMPING STATION
CONTRACT 1B – ELECTRICAL CONSTRUCTION

DETAILS

BROOME COUNTY, NEW YORK

TOWN OF VESTAL

Barton & Loguidice, D.P.C.

75% SUBMISSION

NOT FOR CONSTRUCTION
6/10/16

Date
JUNE, 2016

Scale
AS SHOWN

Sheet Number
E3

Project Number
409.002

Plotted: Jun 09, 2016 – 5:21PM SYR By: rdo
Z:\BL-Vault\02\18217A02-1C71-4823-8927-99D5C405417D\990000-990999\990362\L\L\409002 E Drawings (ID 990362).dwg

Checked by INITIALS Drawn by DMS Designed by DMS In charge of INITIALS

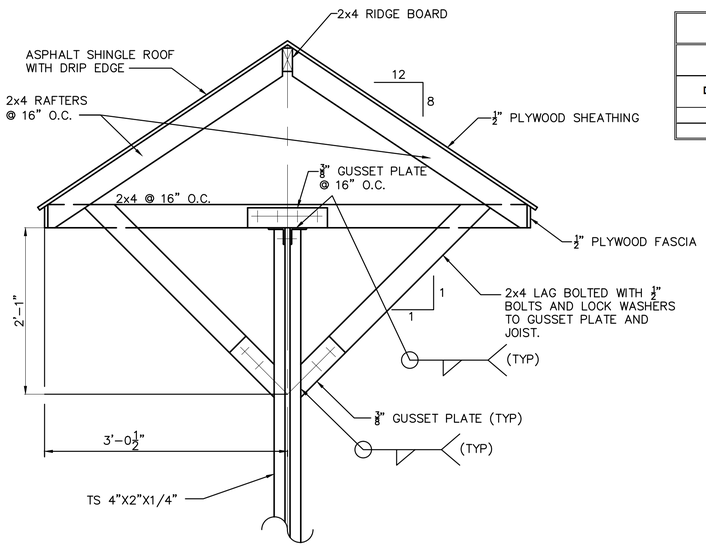

SECTION 1/E4
SCALE: NTS

GENERAL NOTES, (TYPICAL ALL FREE STANDING EQUIPMENT BACKBOARD DETAILS)

1. CONTRACTOR SHALL SIZE AND ARRANGE PANELS TO FIT BACKBOARD AND ELECTRICAL EQUIPMENT. CONTRACTOR SHALL INCREASE WIDTH OF BACKBOARD IF EQUIPMENT THAT IS PURCHASED IS LARGER THAN SHOWN IN DETAIL.
2. ALL ELECTRICAL EQUIPMENT SHALL BE INSTALLED SUCH THAT BOTTOM OF EQUIPMENT IS AT LEAST 36" AFG.

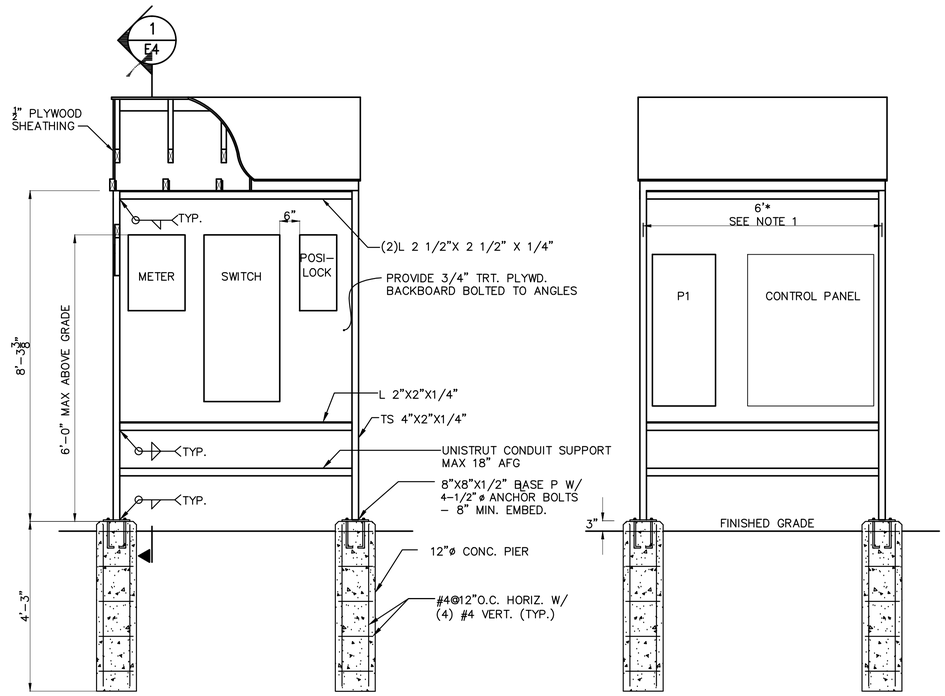

FREE-STANDING EQUIPMENT BACKBOARD DETAIL - MONTEZUMA METER PIT SITE
SCALE: NTS

EQUIPMENT CONNECTION SCHEDULE (E.C.S)

EQUIPMENT			EQUIPMENT LOAD					EQUIPMENT DISCONNECT				CONTROLLER			CIRCUIT			EQUIPMENT
DESIGNATION	DESCRIPTION	LOCATION	HP	KW	AMPS	VOLTS	Ø	LOCATION	RATING	TYPE	NEMA ENCL.	LOCATION	TYPE	NEMA ENCL.	CONDUCTORS / CONDUIT	C/B	PANEL	DESIGNATION
P1	WELL PUMP	WET WELL	100			480	3		CONTROLLER			CONTROL PANEL	VFD	3R	SEE ONE-LINE		CONTROL PANEL	P1
P2	WELL PUMP	WET WELL	100			480	3		CONTROLLER			CONTROL PANEL	VFD	3R	SEE ONE-LINE		CONTROL PANEL	P2

PANEL 'P1'

ELECTRICAL CHARACTERISTICS				LOCATION
480/277V, 3 PHASE, 4 WIRE				EQUIPMENT BACKBOARD
400A	400A	18	42KAIC	NEMA 3R DOOR-IN-DOOR
MAIN BUS	MAIN BREAKER	TOTAL 1P SPACES	MIN. INTERRUPTING RATING - SYM	ENCLOSURE

CIRCUIT NUMBER	CIRCUIT SERVED	BREAKER AMP	BREAKER POLE	BREAKER POLE	BREAKER AMP	CIRCUIT SERVED	CIRCUIT NUMBER
1	CONTROL PANEL	300	3	1	20	LIGHTS	2
3				1	20	SPARE	4
5				1	20	SPARE	6
7	SPACE					SPACE	8
9	SPACE					SPACE	10
11	SPACE					SPACE	12
13	SPACE					SPACE	14
15	SPACE					SPACE	16
17	SPACE					SPACE	18

GENERAL NOTES, PANEL 'P1'

1. VERIFY ALL CIRCUIT BREAKER REQUIREMENTS WITH EQUIPMENT MANUFACTURER. PROVIDE AS REQUIRED.
2. PROVIDE SPARE BREAKERS AS INDICATED.
3. PROVIDE TOTAL NUMBER OF 1P SPACES AS INDICATED. PROVIDE BLOCK OFF PLATES FOR ALL SPACES WHICH ARE NOT UTILIZED.
4. PANEL BUS SHALL EXTEND ENTIRE PANEL LENGTH.

CIRCUIT SCHEDULE

DESIGNATION ⬡	CONDUCTORS (SETS-QUANTITY#SIZE)	CONDUIT (SETS-DIAMETER)	REMARKS
1	(4)#500	4"	
2	(4)#500, (1)#2G	4"	
3	(4)#500, (1)#2G	4"	
4	(3)350KCMIL, (1)#4G	3"	
5	(2)#12, (1)#12G	3/4"	
6	(2)#12, (1)#12G	3/4"	
7	MANUFACTURER'S CABLE	4"	
8	MANUFACTURER'S CABLE	2"	

CONDUIT SCHEDULE

BUILDING OR AREA	AREA DESCRIPTION	CONDUIT TYPE	REMARKS
ALL AREAS	EXTERIOR EXPOSED	RGS	
	RISERS FROM GRADE	RGS	
	IN SLAB	PVC SCHEDULE 40	
	UNDERGROUND - DIRECT BURY	PVC SCHEDULE 40	

GENERAL NOTES, CONDUIT SCHEDULE

1. CONDUIT TYPES ARE UNLESS OTHERWISE INDICATED OR REQUIRED BY EQUIPMENT OR CABLE MANUFACTURERS. PROVIDE AS REQUIRED.

NO ALTERATION PERMITTED HEREON EXCEPT AS PROVIDED UNDER SECTION 7209 SUBDIVISION 2 OF THE NEW YORK STATE EDUCATION LAW.

COMPLETED CONSTRUCTION

Significant Construction Changes Are Shown

By _____ Date _____

Ck'd _____ Date _____

REVISIONS

TOWN OF VESTAL

ROBERT STREET STORMWATER PUMPING STATION
CONTRACT 1B - ELECTRICAL CONSTRUCTION

DETAILS

BROOME COUNTY, NEW YORK

TOWN OF VESTAL

Barton & Loguidice, D.P.C.

75% SUBMISSION

NOT FOR CONSTRUCTION
6/10/16

Date
JUNE, 2016

Scale
AS SHOWN

Sheet Number
E4

Project Number
409.002

Checked by _____ INITIALS Drawn by _____ DMS Designed by _____ DMS In charge of _____ INITIALS

Plotted: Jun 09, 2016 - 5:21PM SYR By: rdb
Z:\BL-Vault\D2\{827A02-1C71-4823-8927-99050405414F}\0\990000-990999\990362\L\L\409002 E Drawings (ID 990362).dwg

October 21, 2016

Stephen Gould
U.S. Environmental Protection Agency
290 Broadway, 24th Floor
New York, New York 10007

Re: Town of Vestal
Robert Street Stormwater Pumping Station

Subj: Response to Comments and Questions

File: 409.002.001

Dear Mr. Gould:

Barton & Loguidice, D.P.C. (B&L) has received and reviewed the EPA's comments and questions on the Robert Street Pump Station project and offers the following clarifications in response:

1) *Over what area will stormwater be collected? Will stormwater run into catch basins along Roberts and other streets and be delivered by gravity flow to the pump station? Will the stormwater piping collect runoff from Route 434 (Vestal Parkway)?*

Response: **Under existing conditions, a combination of open and closed gravity drainage systems convey stormwater runoff from approximately 117 acres of land within the Town of Vestal to an existing NYSDEC stormwater retention pond. This stormwater pond outlets directly to Choconut Creek via a culvert. This outlet culvert is valve controlled and can be closed in situations where the elevation of the Choconut Creek rises above that of the NYSDEC stormwater pond. In situations when the outfall of the NYSDEC's stormwater pond is closed, tributary flows will eventually create backwater from the pond which ultimately feeds the proposed Robert Street Pump Station. During lower flow conditions, stormwater will bypass the pump station. Only during high flow conditions will the pump station receive flows.**

Under existing conditions, a small portion of NYS Route 434 is tributary to the NYSDEC retention pond within the Town of Vestal. The area of this tributary portion has been accounted for in our hydraulic and drainage models.

443 Electronics Parkway · Liverpool, New York 13088
Telephone: 315-457-5200 · Facsimile: 315-451-0052 · www.BartonandLoguidice.com

The experience to listen. The power to solve.

2) *Exactly what piping enters the pump station and what piping leaves it? What happened to the piping that used to carry sanitary waste, and where was that wastewater delivered? How is sanitary waste now being collected from neighborhood residents and being delivered to a wastewater treatment plant? How is stormwater currently being managed?*

Response: **As seen on sheet G-6 of the engineering plans, "*Pumping Station Plans, Section, and Detail*"; one (1) 36" SICPP pipe will enter the station from the influent structure, and two (2) 16" DIP pipes will leave the station to carry effluent flows to Choconut Creek. Sheet G-5 shows that there is currently one (1) 14" ACP pipe and one (1) 8" CIP pipe that enter and exit the station, respectively. These pipes were used at one time to carry sewage to and from the pump station but have since been decommissioned and abandoned in place. Sheet G-5 shows that these pipes will be filled with non-shrink grout at their penetration through the existing Robert Street pump station walls as part of this project.**

According to the 2013 Broome County Comprehensive Plan, sanitary wastewater from the Town of Vestal is currently being collected and transmitted to either the Binghamton-Johnson City WWTP or the Town of Endicott WWTP for treatment depending on location within the Town. The Robert Street Pump Station is a decommissioned pump station and the existing influent and effluent pipes that once carried sewage to and from the station have been abandoned in place. This project will have no effect on the current methods of sanitary sewage collection or disposal.

Stormwater is currently managed as stated in the answer to question No. 1, above.

3) *Please summarize the material and the diameter of the influent piping as well as the effluent piping that will lead from the pump station to the creek. Will the two outfall pipes be parallel to each other or will they take completely divergent paths? (Presumably each of the two pumps is associated with one of the effluent pipes.) How will pipe segments be joined—or will stormwater flow through a channel at the base of each manhole, with the influent and effluent sections of the piping being disconnected?*

Response: **The piping size and material is as noted below and on Sheet G-2 of the attached plans. The flow of stormwater through the proposed system is as described below and can be seen on Sheets G-2 and G-6 of the attached plans:**

- **Stormwater will flow over an operator adjustable weir level to enter a concrete influent structure next to the existing stormwater drainage ditch.**
- **Water will leave the influent structure through a 36" smooth interior corrugated polyethylene pipe (SICPP). This pipe will enter into a manhole (MH) where this pipe section will end and another 36" SICPP pipe will leave the MH at 90-degrees to the first. This second 36" pipe will carry flows into the pump station wet well as seen on Sheet G-6 of the attached plans.**
- **Once in the wet well; flows will accumulate until an operator adjustable pump on water level is reached at which time flows will be pumped through two (2) 100 HP submersible pumps into two (2) 16" ductile iron pipe (DIP) force mains (one dedicated force main for each pump).**
- **The 16" pipes will carry flows from the pump station wet well until they exit the structure. Once outside the structure, the two (2) DIP force mains will each be upsized to 24" DIP and will run mostly parallel as seen on Sheet G-2 of the attached drawings. All buried DIP will be push on joint pipe with thrust blocks or restrained joints at all fittings as directed in the attached plans. All interior DIP process piping and fittings will be flanged jointed and anchored to the floor or walls as directed in the attached plans.**

4) *How far below grade will the pumps be? (The outfall pipes will presumably emerge from the pump station at about this depth as well.)*

Response: Refer to Sheet G-6 of the attached Engineering Plans.

- **Proposed Finished Grade is 824.00'**
- **The bottom of pumps are proposed to be installed 12-5/8" above existing floor elevation; or at an elevation of 801.42' (Existing Floor Elevation = 799.79')**
- **Effluent pipes will exit the interior of the pump station with an invert elevation of 811.50'**

5) *Approximately what length of outfall piping will be buried and what length will be traversing the swale? Presumably, pipe that is buried will be about 6 feet below grade over a certain portion of its length, since there will be two manholes at that depth somewhere along the pipe's buried course. How will the supports of the outfall pipes in the swale area themselves be supported? Will they be driven into the ground to the point of refusal by a vibratory hammer? Will they have concrete spread footers? Will the supports themselves be concrete? Will there be bands around the pipe that fasten it to the supports?*

Response: **All proposed influent and effluent pipe will be buried prior to project completion. Refer to Sheet G-2 and G-4 for pipe length and proposed pipe and manhole depths. The buried pipes will be supported by the backfill material placed around the pipe during installation according to the excavation, pipe lining, and backfill details on Sheet G-8. Concrete thrust restraints per the detail on Sheet G-8 will be poured at all fitting locations and buried along with the pipe prior to completion of the project.**

6) *The 36" influent pipe will collect "ponding" water in the vicinity of Route 434. Is this runoff from the highway? Will the area of the residences along Robert and Elizabeth Streets also contribute stormwater? As I asked earlier, will there be catch basins along the streets and piping that connect the catch basins to the 36" pipe?*

Response: **See response to question No. 1 above.**

If you have any questions or concerns about this project or our responses to your questions, please feel free to contact me directly.

Very truly yours,

BARTON & LOGUIDICE, D.P.C.

Charles A. White, P.E., LEED AP
Senior Managing Engineer

RDO/tlh

Attachments

January 28, 2015

Mr. David Bimber
Regional Permit Administrator
New York State Department of Environmental Conservation - Region 7 Office
615 Erie Blvd. West
Syracuse, NY 13204

VIA EMAIL: dep.r7@dec.ny.gov

Re: SPDES Compliance Inquiry, Robert Street Stormwater Pump Station Upgrade, Town of Vestal, Broome County, New York

Dear Mr. Bimber:

The Governor's Office of Storm Recovery (GOSR), operating under the auspices of New York State Homes and Community Renewal's (NYSHCR) Housing Trust Fund Corporation, was established to aid the statewide recovery of disaster-affected communities in New York State. As part of this recovery GOSR has established the New York Rising Community Reconstruction (NYRCR) program. An applicant to the NYRCR program, the Town of Vestal, has submitted a pre-application to GOSR requesting funding for the above-mentioned proposed action. This letter is to inquire about Stormwater Pollution Discharge Elimination System (SPDES) compliance that may be applicable to the proposed action.

The proposed action is the conversion of a defunct sanitary pump house to a stormwater pump house in order to reduce flood risk to the surrounding neighborhood. The pump house is located at 549 Vestal Parkway, Town of Vestal, Broome County, NY, and the coordinates of the property are N 42°05'01.96" W 76°03'46.43". The converted pump house will pump ponding stormwater in an adjacent swale over a levee into Choconut Creek during storm events. This will prevent stormwater from flooding the surrounding neighborhood.

Construction activities will include work within the existing pump house to upgrade the pumps. Existing piping from the pump house to Choconut Creek may be used for this project. However, whether these pipes are serviceable is not known at this juncture. Given the age of the piping, new piping may have to be constructed in place of the old pipe. In this case, the construction would include removal of the old pipe and installation of two new pipes in place. The pipes would face a westerly direction from the pump house over the existing levee and into the adjacent Choconut Creek. The piping will be supported so that the section running across the stormwater swale is above ground. The pipe sections installed on the levee will be installed on washed gravel bedding and will be filled over and seeded.

The two new pipes, which will be installed adjacent to each other, will be approximately 225 feet in length each, and the diameter of the pipes will be up to 36 inches. Minor excavation will occur in

order to install a washed gravel bedding for the piping and for the installation of supports on which the piping will be mounted. Excavation will also occur near the foundation of the pump house in order to construct an entrance for ponding water to freely flow into the pump house.

This project is located in an urbanized area per 2010 and 2000 urbanized data provided by the NYS DEC, and the Town of Vestal maintains an MS4 permit. As the project will not disturb greater than one (1) acre of land, it is not anticipated that a SPDES permit for construction activities will be necessitated and application for the GP-0-10-001 is not necessary. Additionally, given that discharge from the facility will be composed entirely of stormwater, to which no pollutants will be added, we believe that the proposed activity is exempt from SPDES permitting requirements pursuant to 6 NYCRR §750-1.5 (a) (10).

The DEC recommends pre-application conferences for projects potentially implicating permit requirements. Accordingly, our intent is to inform the DEC of a proposed action that will discharge stormwater directly into Choconut Creek (DEC Class C Standard C) in the Town of Vestal, NY. We conclude there is no further action necessary to bring this proposed project into compliance with SPDES regulations set forth in Article 17 of Title 8 of the NYS Environmental Conservation Law. It is anticipated that the Town of Vestal will review the project to ensure that the project is consistent with the Town's MS4 permit, and that it will not violate water quality parameters set forth therein.

We ask the DEC to concur with the SPDES applicability analysis for the project described herein, or to aid in identifying any necessary actions that must be taken in order for this project to comply with NYS SPDES regulations. If needed, a conference call with all applicable parties can be organized to discuss. Your assistance in this matter is greatly appreciated.

The location of the project and the action area are identified on the enclosed USGS topographic map, street map, and aerial map.

For additional information, please contact me by email at *Thomas.King@stormrecovery.ny.gov* or by telephone at (646) 417-4660.

Sincerely,

Thomas J. King
Assistant General Counsel

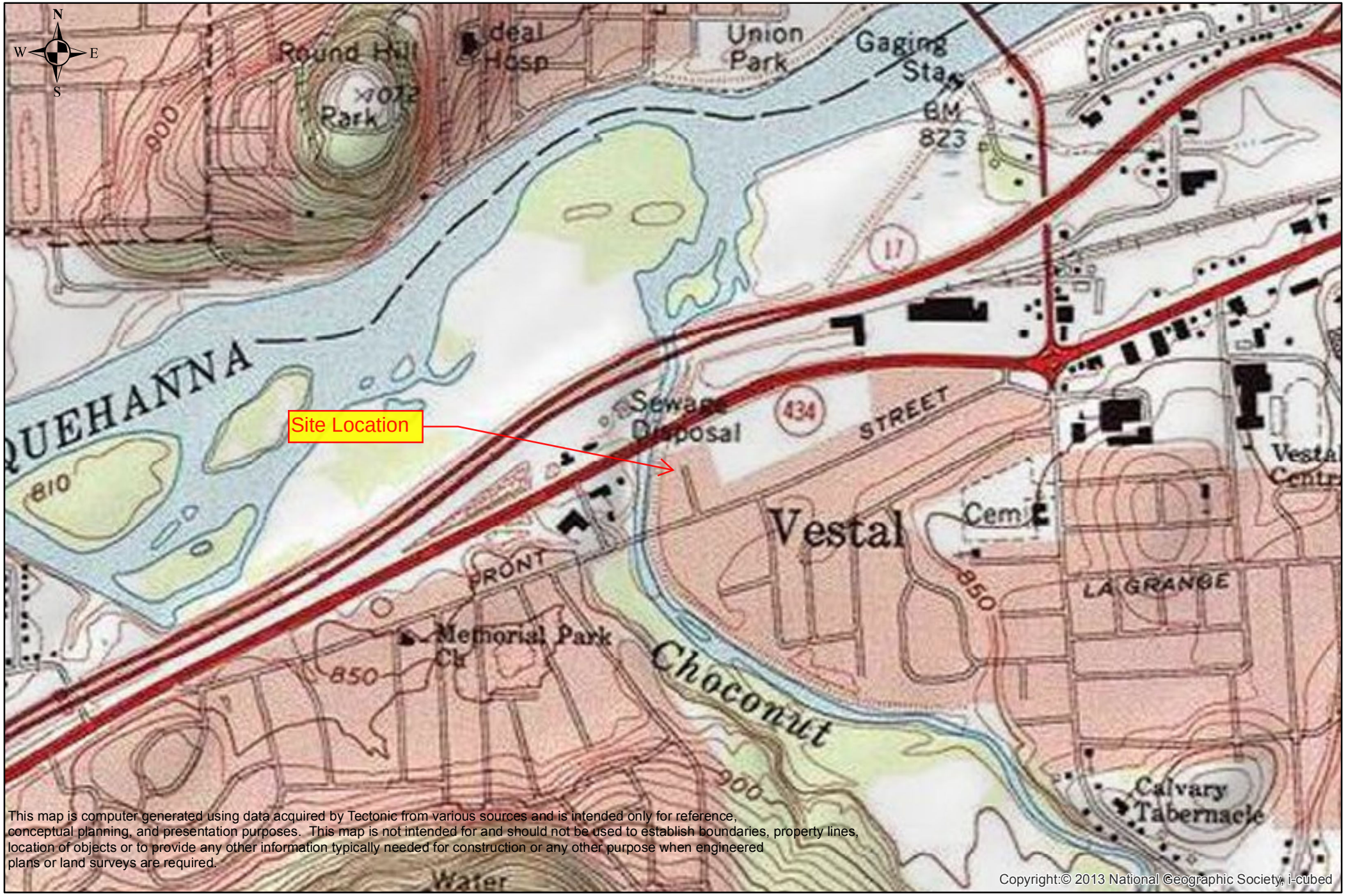

This map is computer generated using data acquired by Tectonic from various sources and is intended only for reference, conceptual planning, and presentation purposes. This map is not intended for and should not be used to establish boundaries, property lines, location of objects or to provide any other information typically needed for construction or any other purpose when engineered plans or land surveys are required.

Copyright:© 2013 National Geographic Society, i-cubed

TECTONIC

Practical Solutions, Exceptional Service

TECTONIC
70 Pleasant Hill Road,
Mountainville, N.Y. 10953
845.534.5959 voice 845.534-5999 fax
www.tectonicengineering.com

0 0.1 0.2 0.4 Miles

Topographic Map
Robert Street Stormwater Pump Station Upgrade
Town of Vestal, NY

This map is computer generated using data acquired by Tectonic from various sources and is intended only for reference, conceptual planning, and presentation purposes. This map is not intended for and should not be used to establish boundaries, property lines, location of objects or to provide any other information typically needed for construction or any other purpose when engineered plans or land surveys are required.

Sources: Esri, HERE, DeLorme, USGS, Intermap, increment P Corp., NRCAN, Esri Japan, METI, Esri China (Hong Kong), Esri (Thailand), TomTom, MapmyIndia, © OpenStreetMap contributors, and the GIS User Community

TECTONIC

Practical Solutions, Exceptional Service

TECTONIC
70 Pleasant Hill Road,
Mountainville, N.Y. 10953
845.534.5959 voice 845.534-5999 fax
www.tectonicengineering.com

0 0.1 0.2 0.4 Miles

Street Map
Robert Street Stormwater Pump Station Upgrade
Town of Vestal, NY

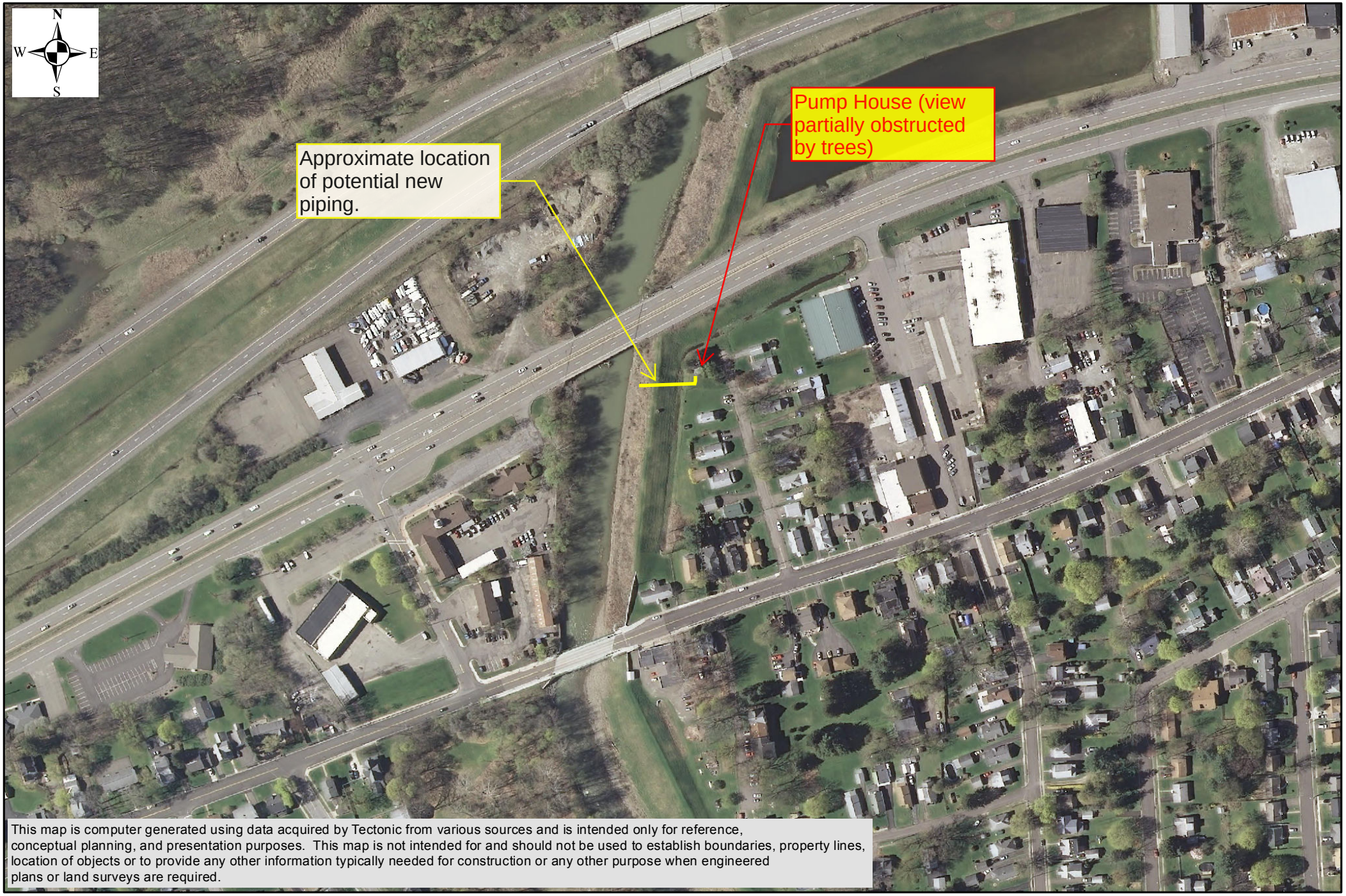

This map is computer generated using data acquired by Tectonic from various sources and is intended only for reference, conceptual planning, and presentation purposes. This map is not intended for and should not be used to establish boundaries, property lines, location of objects or to provide any other information typically needed for construction or any other purpose when engineered plans or land surveys are required.

TECTONIC

Practical Solutions, Exceptional Service

TECTONIC
70 Pleasant Hill Road,
Mountainville, N.Y. 10953
845.534.5959 voice 845.534-5999 fax
www.tectonicengineering.com

Aerial Image
Robert Street Stormwater Pump Station Upgrade
Town of Vestal, NY

0 125 250 500 Feet

Map Created 1/12/2015 by JG

Peoples, Dina

Subject: FW: SPDES Compliance Inquiry
Attachments: part501Applicationentire1_14f.pdf

From: Bimber, David L (DEC)
Sent: Wednesday, February 11, 2015 11:39:56 AM
To: King, Thomas J (STORMRECOVERY)
Cc: Dlugolenski, Joe M (DEC); Ferguson, John J. (DEC)
Subject: RE: SPDES Compliance Inquiry

Mr King:

Thank you for your recent SPDES compliance inquiry regarding the upgrade to the Town of Vestal's stormwater pump station. I apologize for the delay in my response. Regional Staff have reviewed the letter you provided describing the project and we offer the following comments:

1. Our Division of Water staff concurs with your SPDES permit applicability analysis for this project. The GP-0-10-001 Construction Stormwater Permit is not required for soil disturbance activities that do not disturb more than one acre of land and the newly developed outfall will be composed of stormwater which is exempt for the standard SPDES permitting requirements for wastewater discharges. Staff strongly recommend the development and implementation of an Erosion & Sediment Plan for this proposed project to reduce the risk of soil/sediment runoff from the site, which could result in a Water Quality Violation for turbidity.
2. The Town will need a Part 501 permit for Flood Control Land Use (attached). The Town, in the past, has applied for and received this type of permit and they are familiar with the application requirements.
3. An Article 15/401 WQC permit may be needed for the disturbance of the bed or banks of Choconut Creek. Application materials are available on the Department's website. The Town can contact Joe Dlugolenski (607-753-3095 x 233), Deputy Regional Permit Administrator, in our Cortland Office if they have any questions regarding permit requirements.

Please let me know if you have any further questions regarding this proposal or this brief note.

Thanks

Dave

David L. Bimber
Regional Permit Administrator
NYS DEC, Region 7
Division of Environmental Permits
615 Erie Boulevard West
Syracuse, New York 13204-2400

Email: david.bimber@dec.ny.gov
Voice: 315-426-7440

From: King, Thomas J (STORMRECOVERY)
Sent: Tuesday, February 03, 2015 7:36 PM

To: Bimber, David L (DEC)
Subject: FW: SPDES Compliance Inquiry

Dear Mr. Bimber,

I am sending this to you directly as I want to ensure that it found its way to you. Thank you kindly.

Sincerely,
Tom King
Assistant General Counsel
Governor's Office of Storm Recovery
99 Washington Avenue Suite 1224
Albany, New York 12231
Office: (518) 473-0015
Mobile: (646) 417-4660
Thomas.King@StormRecovery.NY.Gov

From: King, Thomas J (STORMRECOVERY)
Sent: Wednesday, January 28, 2015 5:42 PM
To: dec.sm.DEP.R7
Cc: Nasca, Jack A (DEC)
Subject: SPDES Compliance Inquiry

Dear Mr. Bimber,

Please see the attached request. If you have any questions or would like to discuss this matter, please do not hesitate to call or email me. Thank you kindly.

Sincerely,
Tom King
Assistant General Counsel
Governor's Office of Storm Recovery
99 Washington Avenue Suite 1224
Albany, New York 12231
Office: (518) 473-0015
Mobile: (646) 417-4660
Thomas.King@StormRecovery.NY.Gov

Attachment 3

NYSDEC Environmental Resource Map,
USFWS NWI Map,
NYS Coastal Boundary Map,
Effective FEMA FIRMette Map,
Preliminary FEMA FIRMette Maps,
and Wild & Scenic River Map

NYSDEC Environmental Resource Map

[print page] [close window]

Please set your printer orientation to "Landscape".

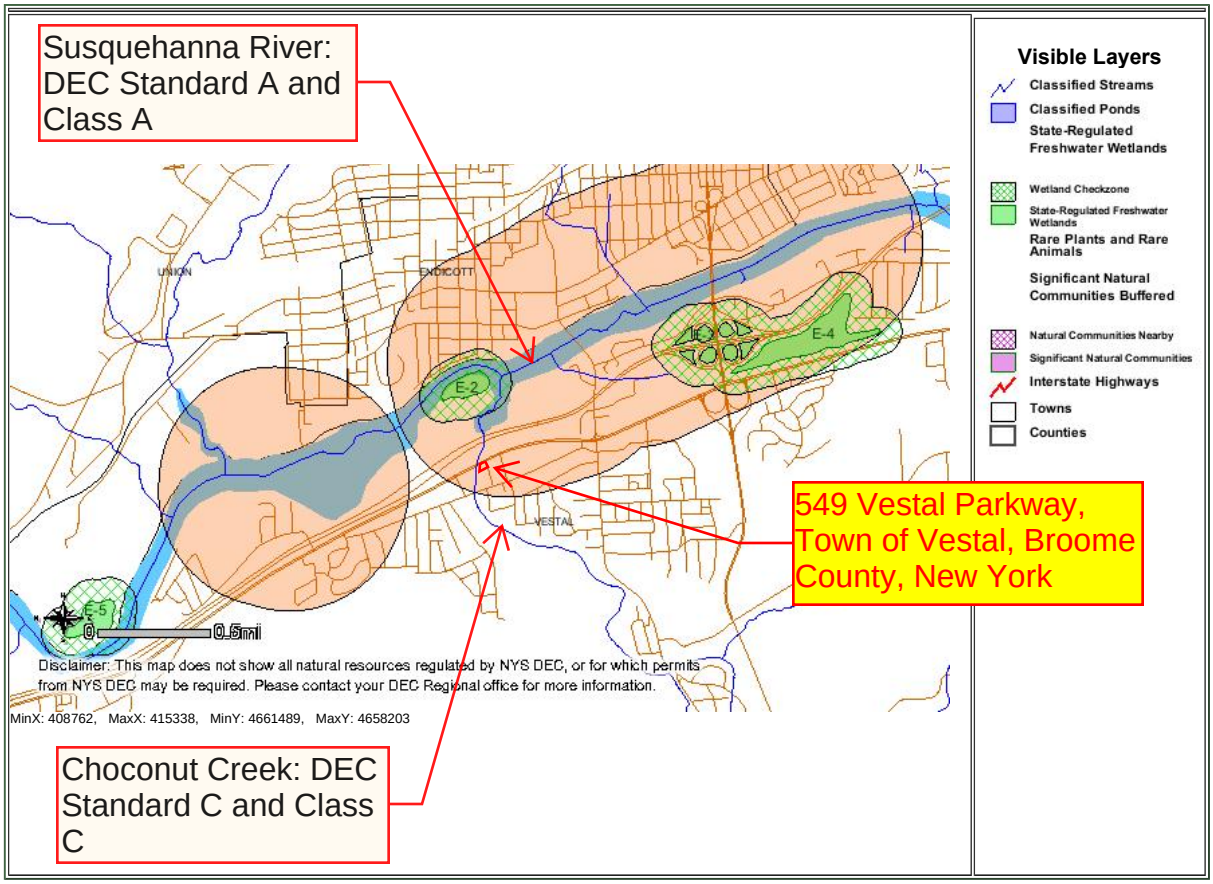

Disclaimer:This map was prepared by the New York State Department of Environmental Conservation using the most
current data available. It is deemed accurate but is not guaranteed. NYS DEC is not responsible for any inaccuracies
in the data and does not necessarily endorse any interpretations or products derived from the data.

U.S. Fish and Wildlife Service

National Wetlands Inventory

Wetlands

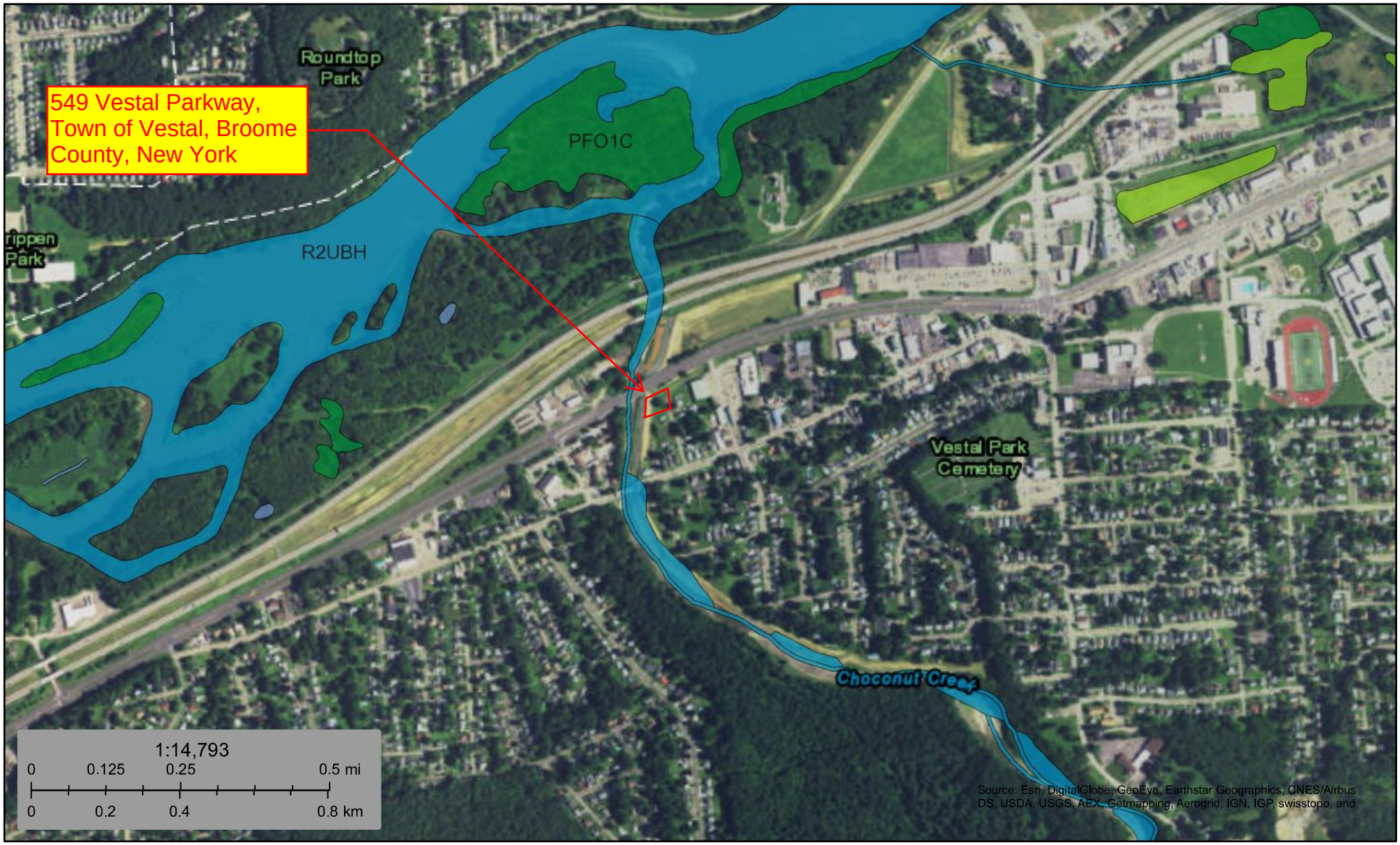

August 9, 2016

- Estuarine and Marine Deepwater
- Estuarine and Marine Wetland
- Freshwater Emergent Wetland
- Freshwater Forested/Shrub Wetland
- Freshwater Pond
- Lake
- Other
- Riverine

This map is for general reference only. The US Fish and Wildlife Service is not responsible for the accuracy or currentness of the base data shown on this map. All wetlands related data should be used in accordance with the layer metadata found on the Wetlands Mapper web site.

National Wetlands Inventory (NWI)
This page was produced by the NWI mapper

DEPARTMENT OF STATE, OFFICE OF
PLANNING & DEVELOPMENT
ANDREW M. CUOMO, GOVERNOR CESAR A. PERALES, SECRETARY OF STATE

Welcome to the NYS Coastal Boundary Map

Help

Search

549 Vestal Parkway, Town of Vestal, Broome County, New York

Please note that the address marker is automatically placed along the street while certain activities may take place along the waterward property boundary. Please make sure to click and drag the marker to the exact location of the proposed activity for an accurate assessment of whether or not the activity would be located within any DOS Special Management Areas.

Layers

- Landward Coastal Boundary
- Scenic Areas
- Local Waterfront Revitalization Areas
- Local Waterfront Revitalization Program Communities
- Significant Coastal Fish and Wildlife Habitats
- DOS Identified Canals
- Long Island Sound CMP (excludes LWRP communities)
- Federally Owned Lands
- Native American Lands

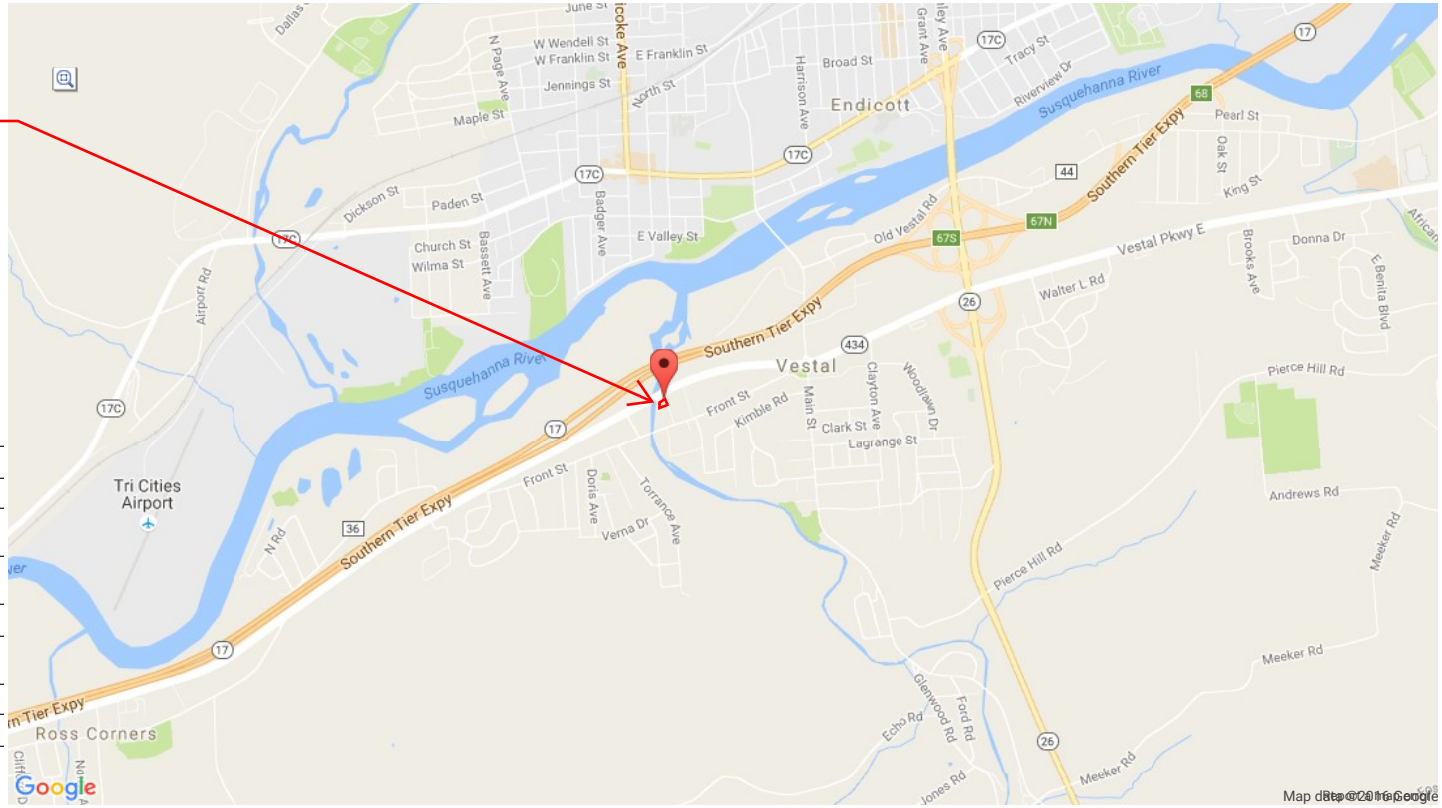

Latitude: 42.803 Longitude: -75.399

The New York State Department of State makes every effort to post accurate and reliable information on this website. The Department of State does not guarantee or warrant that the information on this web site is complete, accurate or current. The information on this website is intended solely for the purpose of electronically providing the public with general coastal consistency-related information and convenient access to data resources. The Department of State neither assumes responsibility for the use or application of any material posted on this website nor responsibility for any error, omission or other discrepancy between the electronic and printed versions of documents.

Wild and Scenic Rivers Map

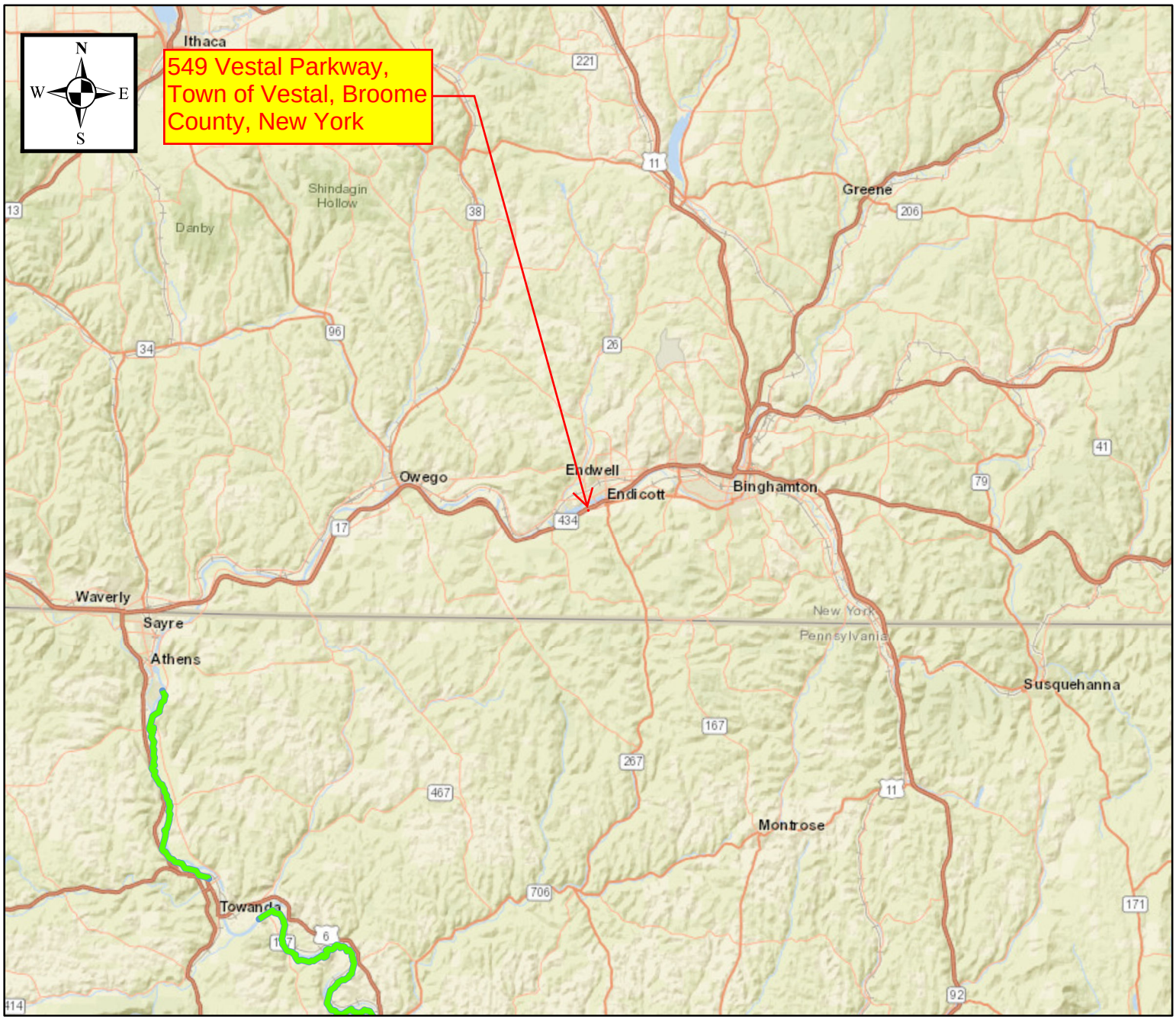

TECTONIC
Practical Solutions, Exceptional Service

0 26,000 52,000 104,000 Feet

1:500,000

Robert Street Stormwater Pump Station
Robert Street, Town of Vestal
Broome County, New York

Created: 11/22/2016

Data Sources:
List of Wild, Scenic, and Recreational Rivers provided by the NYSDEC at http://www.dec.ny.gov/permits/32739.html

Potential Environmental Justice Areas provided by The Office of Environmental Justice and available at http://www.dec.ny.gov/public/899.html

Legend

Vestal - Robert St

Wild and Scenic Rivers

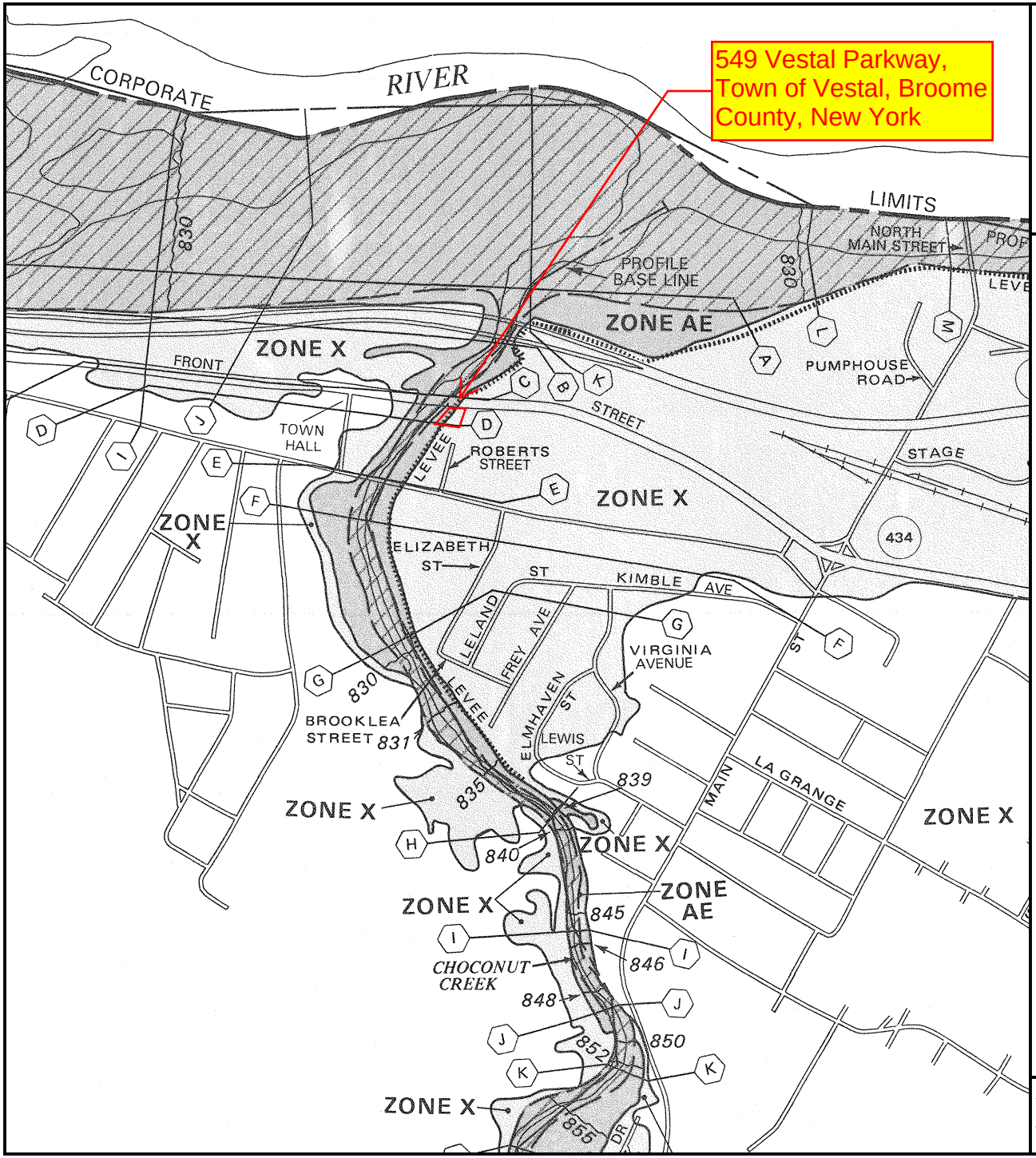

APPROXIMATE SCALE

1000 0 1000 FEET

NATIONAL FLOOD INSURANCE PROGRAM

FIRM

FLOOD INSURANCE RATE MAP

TOWN OF
VESTAL,
NEW YORK
BROOME COUNTY

PANEL 10 OF 30
(SEE MAP INDEX FOR PANELS NOT PRINTED)

COMMUNITY-PANEL NUMBER
360057 0010 E

MAP REVISED:
MARCH 2, 1998

Federal Emergency Management Agency

This is an official copy of a portion of the above referenced flood map. It was extracted using F-MIT On-Line. This map does not reflect changes or amendments which may have been made subsequent to the date on the title block. For the latest product information about National Flood Insurance Program flood maps check the FEMA Flood Map Store at www.msc.fema.gov

NOTES TO USERS

This map is for use in administering the National Flood Insurance Program. It does not necessarily identify all areas subject to flooding, particularly from local drainage sources of small size. The **community map repository** should be consulted for possible updated or additional flood hazard information.

To obtain more detailed information in areas where **Base Flood Elevations** (BFEs) and/or **floodways** have been determined, users are encouraged to consult the Flood Profiles and Floodway Data and/or Summary of Stillwater Elevations tables contained within the Flood Insurance Study (FIS) report that accompanies this FIRM. Users should be aware that BFEs shown on the FIRM represent rounded whole-foot elevations. These BFEs are intended for flood insurance rating purposes only and should not be used as the sole source of flood elevation information. Accordingly, flood elevation data presented in the FIS report should be utilized in conjunction with the FIRM for purposes of construction and/or floodplain management.

Coastal Base Flood Elevations shown on this map apply only landward of 0.0' North American Vertical Datum of 1988 (NAVD 88). Users of this FIRM should be aware that coastal flood elevations are also provided in the Summary of Stillwater Elevations tables in the Flood Insurance Study report for this jurisdiction. Elevations shown in the Summary of Stillwater Elevations tables should be used for construction and/or floodplain management purposes when they are higher than the elevations shown on this FIRM.

Boundaries of the **floodways** were computed at cross sections and interpolated between cross sections. The floodways were based on hydraulic considerations with regard to requirements of the National Flood Insurance Program. Floodway widths and other pertinent floodway data are provided in the Flood Insurance Study report for this jurisdiction.

Certain areas not in Special Flood Hazard Areas may be protected by **flood control structures**. Refer to Section 2.4 "Flood Protection Measures" of the Flood Insurance Study report for information on flood control structures for this jurisdiction.

The **projection** used in the preparation of this map was New York State Plane FIPSZONE 3102. The **horizontal datum** was NAD 83, GRS80 spheroid. Differences in datum, spheroid, projection or State Plane zones used in the production of FIRMs for adjacent jurisdictions may result in slight positional differences in map features across jurisdiction boundaries. These differences do not affect the accuracy of this FIRM.

Flood elevations on this map are referenced to the North American Vertical Datum of 1988. These flood elevations must be compared to structure and ground elevations referenced to the same **vertical datum**. For information regarding conversion between the National Geodetic Vertical Datum of 1929 and the North American Vertical Datum of 1988, visit the National Geodetic Survey website at http://www.ngs.noaa.gov or contact the National Geodetic Survey at the following address:

NGS Information Services
NOAA, N/NGS12
National Geodetic Survey
SSMC-3, #9202
1315 East-West Highway
Silver Spring, Maryland 20910-3282
(301) 713-3242

To obtain current elevation, description, and/or location information for **bench marks** shown on this map, please contact the Information Services Branch of the National Geodetic Survey at **(301) 713-3242**, or visit its website at http://www.ngs.noaa.gov.

Base map information shown on this FIRM was derived from digital orthophotography provided by the New York Office of Cyber Security & Critical Infrastructure Coordination. This information was provided as 12-inch and 24-inch resolution natural color orthoimagery from photography dated April 2006.

Based on updated topographic information, this map reflects more detailed and up-to-date **stream channel configurations and floodplain delineations** than those shown on the previous FIRM for this jurisdiction. As a result, the Flood Profiles and Floodway Data tables in the Flood Insurance Study Report (which contains authoritative hydraulic data) may reflect stream channel distances that differ from what is shown on this map. Also, the road to floodplain relationships for unrevised streams may differ from what is shown on previous maps.

Corporate limits shown on this map are based on the best data available at the time of publication. Because changes due to annexations or de-annexations may have occurred after this map was published, map users should contact appropriate community officials to verify current corporate limit locations.

Please refer to the separately printed **Map Index** for an overview map of the county showing the layout of map panels; community map repository addresses; and a Listing of Communities table containing National Flood Insurance Program dates for each community as well as a listing of the panels on which each community is located.

Contact the **FEMA Map Service Center** at 1-800-358-9616 for information on available products associated with this FIRM. Available products may include previously issued Letters of Map Change, a Flood Insurance Study report, and/or digital versions of this map. The FEMA Map Service Center may also be reached by Fax at 1-800-358-9620 and its website at http://www.msc.fema.gov.

If you have **questions about this map** or questions concerning the National Flood Insurance Program in general, please call **1-877-FEMA MAP** (1-877-336-2627) or visit the FEMA website at http://www.fema.gov/business/nfip.

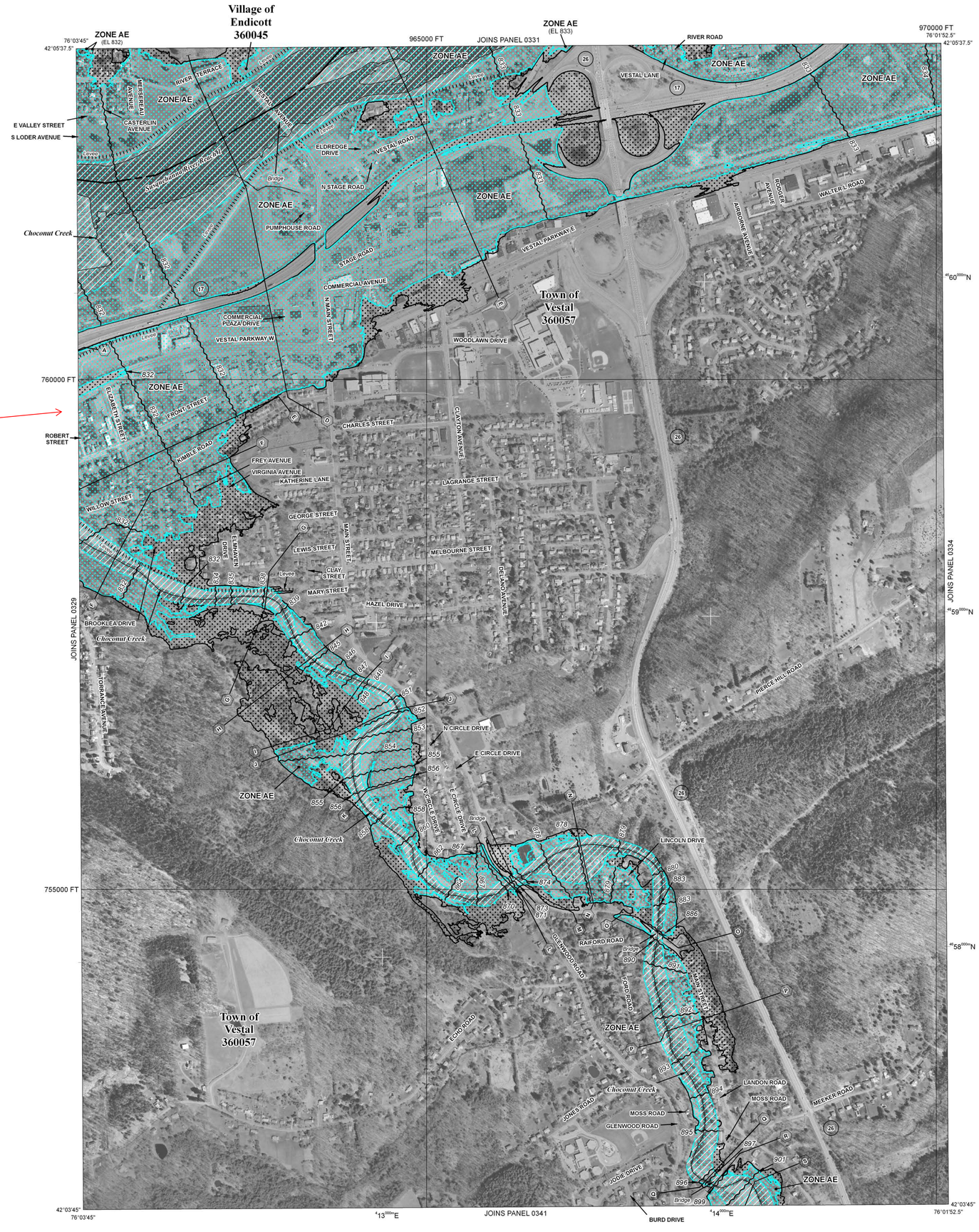

LEGEND

SPECIAL FLOOD HAZARD AREAS SUBJECT TO INUNDATION BY THE 1% ANNUAL CHANCE FLOOD

The 1% annual flood (100-year flood), also known as the base flood, is the flood that has a 1% chance of being equaled or exceeded in any given year. The Special Flood Hazard Area is the area subject to flooding by the 1% annual chance flood. Areas of Special Flood Hazard include Zones A, AE, AH, AO, AR, A99, V, and VE. The Base Flood Elevation is the water-surface elevation of the 1% annual chance flood.

ZONE A	No Base Flood Elevations determined.
ZONE AE	Base Flood Elevations determined.
ZONE AH	Flood depths of 1 to 3 feet (usually areas of ponding); Base Flood Elevations determined.
ZONE AO	Flood depths of 1 to 3 feet (usually sheet flow on sloping terrain); average depths determined. For areas of alluvial fan flooding, velocities also determined.
ZONE AR	Special Flood Hazard Area formerly protected from the 1% annual chance flood by a flood control system that was subsequently decertified. Zone AR indicates that the former flood control system is being restored to provide protection from the 1% annual chance or greater flood.
ZONE A99	Area to be protected from 1% annual chance flood by a Federal flood protection system under construction; no Base Flood Elevations determined.
ZONE V	Coastal flood zone with velocity hazard (wave action); no Base Flood Elevations determined.
ZONE VE	Coastal flood zone with velocity hazard (wave action); Base Flood Elevations determined.

FLOODWAY AREAS IN ZONE AE

The floodway is the channel of a stream plus any adjacent floodplain areas that must be kept free of encroachment so that the 1% annual chance flood can be carried without substantial increases in flood heights.

OTHER FLOOD AREAS

ZONE X	Areas of 0.2% annual chance flood; areas of 1% annual chance flood with average depths of less than 1 foot or with drainage areas less than 1 square mile; and areas protected by levees from 1% annual chance flood.

OTHER AREAS

ZONE X	Areas determined to be outside the 0.2% annual chance floodplain.
ZONE D	Areas in which flood hazards are undetermined, but possible.

COASTAL BARRIER RESOURCES SYSTEM (CBRS) AREAS

OTHERWISE PROTECTED AREAS (OPAs)

CBRS areas and OPAs are normally located within or adjacent to Special Flood Hazard Areas.

	1% annual chance floodplain boundary
	0.2% annual chance floodplain boundary
	Floodway boundary
	Zone D boundary
	CBRS and OPA boundary
	Boundary dividing Special Flood Hazard Area Zones and boundary dividing Special Flood Hazard Areas of different Base Flood Elevations, flood depths or flood velocities.
	Limit of Moderate Wave Action
513	Base Flood Elevation line and value; elevation in feet*
(EL 987)	Base Flood Elevation value where uniform within zone; elevation in feet*

* Referenced to the North American Vertical Datum of 1988

A — A	Cross section line
23 - - - 23	Transect line
87°07'45", 32°22'30"	Geographic coordinates referenced to the North American Datum of 1983 (NAD 83), Western Hemisphere
3976000mN	1000-meter Universal Transverse Mercator grid ticks, zone 18
600000 FT	5000-foot grid values: New York State Plane coordinate system, Central zone (FIPSZONE 3102), Transverse Mercator projection
DX5510 ×	Bench mark (see explanation in Notes to Users section of this FIRM panel)
● M1.5	River Mile

MAP REPOSITORY
Refer to listing of Map Repositories on Map Index

EFFECTIVE DATE OF COUNTYWIDE
FLOOD INSURANCE RATE MAP

EFFECTIVE DATE(S) OF REVISION(S) TO THIS PANEL

For community map revision history prior to countywide mapping, refer to the Community Map History table located in the Flood Insurance Study report for this jurisdiction.

To determine if flood insurance is available in this community, contact your Insurance agent or call the National Flood Insurance Program at 1-800-638-6620.

MAP SCALE 1" = 500'

250 0 500 1000 FEET

150 0 150 300 METERS

NFIP

NATIONAL FLOOD INSURANCE PROGRAM

PANEL 0333F

FIRM

FLOOD INSURANCE RATE MAP

for BROOME COUNTY, NEW YORK
(ALL JURISDICTIONS)

CONTAINS:

COMMUNITY	NUMBER
ENDICOTT, VILLAGE OF	360045
VESTAL, TOWN OF	360057

PRELIMINARY
FEBRUARY 5, 2010

PANEL 333 OF 651

MAP SUFFIX: F

(SEE MAP INDEX FOR FIRM PANEL LAYOUT)

Notice to User: The **Map Number** shown below should be used when placing map orders; the **Community Number** shown above should be used on insurance applications for the subject community.

MAP NUMBER
36007C0333F

MAP EFFECTIVE

Federal Emergency Management Agency

NOTES TO USERS

This map is for use in administering the National Flood Insurance Program. It does not necessarily identify all areas subject to flooding, particularly from local drainage sources of small size. The **community map repository** should be consulted for possible updated or additional flood hazard information.

To obtain more detailed information in areas where **Base Flood Elevations** (BFEs) and/or **floodways** have been determined, users are encouraged to consult the Flood Profiles and Floodway Data and/or Summary of Stillwater Elevations tables contained within the Flood Insurance Study (FIS) report that accompanies this FIRM. Users should be aware that BFEs shown on the FIRM represent rounded whole-foot elevations. These BFEs are intended for flood insurance rating purposes only and should not be used as the sole source of flood elevation information. Accordingly, flood elevation data presented in the FIS report should be utilized in conjunction with the FIRM for purposes of construction and/or floodplain management.

Coastal Base Flood Elevations shown on this map apply only landward of 0.0' North American Vertical Datum of 1988 (NAVD 88). Users of this FIRM should be aware that coastal flood elevations are also provided in the Summary of Stillwater Elevations tables in the Flood Insurance Study report for this jurisdiction. Elevations shown in the Summary of Stillwater Elevations tables should be used for construction and/or floodplain management purposes when they are higher than the elevations shown on this FIRM.

Boundaries of the **floodways** were computed at cross sections and interpolated between cross sections. The floodways were based on hydraulic considerations with regard to requirements of the National Flood Insurance Program. Floodway widths and other pertinent floodway data are provided in the Flood Insurance Study report for this jurisdiction.

Certain areas not in Special Flood Hazard Areas may be protected by **flood control structures**. Refer to Section 2.4 "Flood Protection Measures" of the Flood Insurance Study report for information on flood control structures for this jurisdiction.

The **projection** used in the preparation of this map was New York State Plane FIPSZONE 3102. The **horizontal datum** was NAD 83, GRS80 spheroid. Differences in datum, spheroid, projection or State Plane zones used in the production of FIRMs for adjacent jurisdictions may result in slight positional differences in map features across jurisdiction boundaries. These differences do not affect the accuracy of this FIRM.

Flood elevations on this map are referenced to the North American Vertical Datum of 1988. These flood elevations must be compared to structure and ground elevations referenced to the same **vertical datum**. For information regarding conversion between the National Geodetic Vertical Datum of 1929 and the North American Vertical Datum of 1988, visit the National Geodetic Survey website at http://www.ngs.noaa.gov or contact the National Geodetic Survey at the following address:

NGS Information Services
NOAA, N/NGS12
National Geodetic Survey
SSMC-3, #9202
1315 East-West Highway
Silver Spring, Maryland 20910-3282
(301) 713-3242

To obtain current elevation, description, and/or location information for **bench marks** shown on this map, please contact the Information Services Branch of the National Geodetic Survey at **(301) 713-3242**, or visit its website at http://www.ngs.noaa.gov.

Base map information shown on this FIRM was derived from digital orthophotography provided by the New York Office of Cyber Security & Critical Infrastructure Coordination. This information was provided as 12-inch and 24-inch resolution natural color orthoimagery from photography dated April 2006.

Based on updated topographic information, this map reflects more detailed and up-to-date **stream channel configurations and floodplain delineations** than those shown on the previous FIRM for this jurisdiction. As a result, the Flood Profiles and Floodway Data tables in the Flood Insurance Study Report (which contains authoritative hydraulic data) may reflect stream channel distances that differ from what is shown on this map. Also, the road to floodplain relationships for unrevised streams may differ from what is shown on previous maps.

Corporate limits shown on this map are based on the best data available at the time of publication. Because changes due to annexations or de-annexations may have occurred after this map was published, map users should contact appropriate community officials to verify current corporate limit locations.

Please refer to the separately printed **Map Index** for an overview map of the county showing the layout of map panels; community map repository addresses; and a Listing of Communities table containing National Flood Insurance Program dates for each community as well as a listing of the panels on which each community is located.

Contact the **FEMA Map Service Center** at 1-800-358-9616 for information on available products associated with this FIRM. Available products may include previously issued Letters of Map Change, a Flood Insurance Study report, and/or digital versions of this map. The FEMA Map Service Center may also be reached by Fax at 1-800-358-9620 and its website at http://www.msc.fema.gov.

If you have **questions about this map** or questions concerning the National Flood Insurance Program in general, please call **1-877-FEMA MAP** (1-877-336-2627) or visit the FEMA website at http://www.fema.gov/business/nfip.

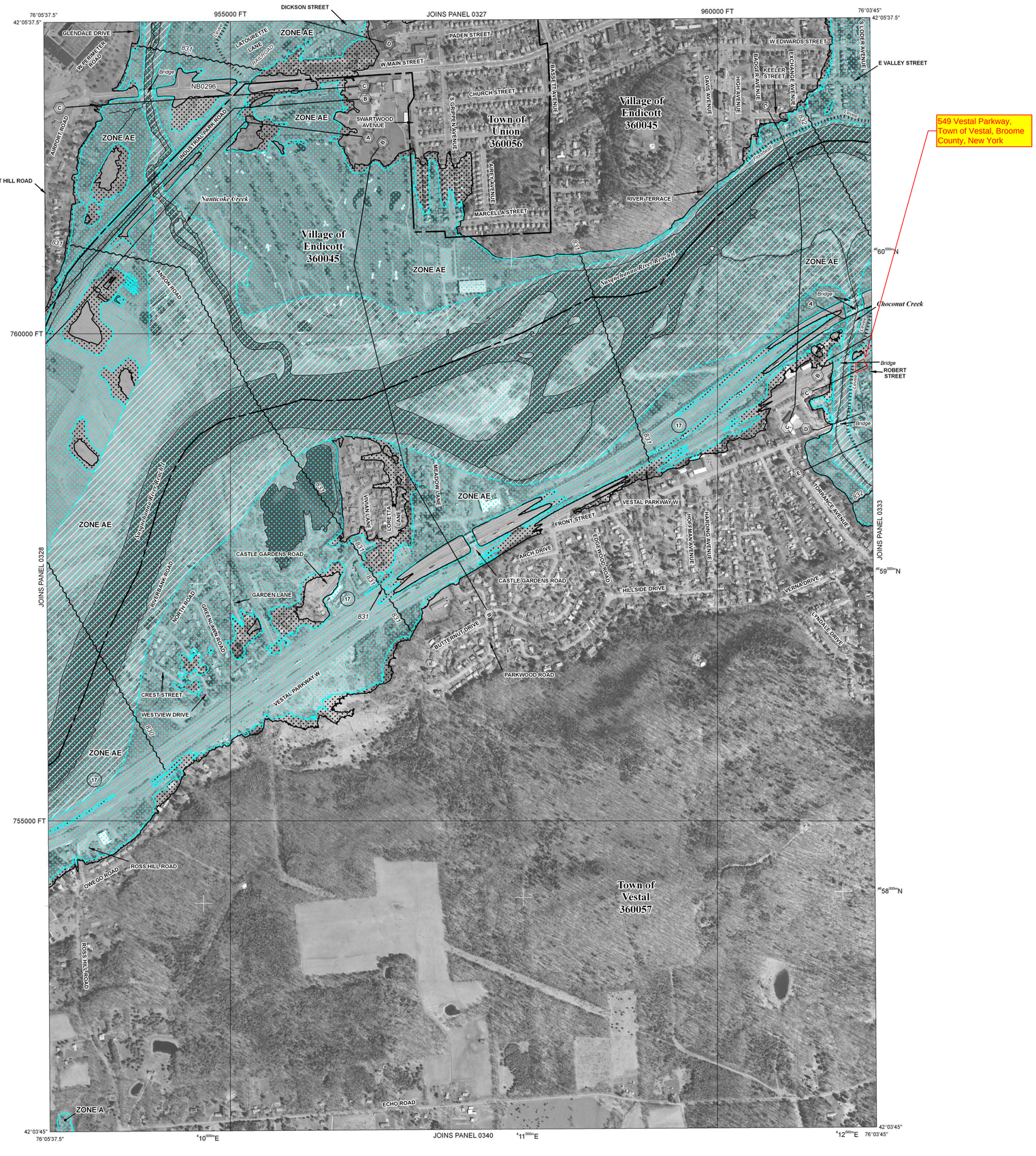

LEGEND

SPECIAL FLOOD HAZARD AREAS SUBJECT TO INUNDATION BY THE 1% ANNUAL CHANCE FLOOD

The 1% annual flood (100-year flood), also known as the base flood, is the flood that has a 1% chance of being equaled or exceeded in any given year. The Special Flood Hazard Area is the area subject to flooding by the 1% annual chance flood. Areas of Special Flood Hazard include Zones A, AE, AH, AO, AR, A99, V, and VE. The Base Flood Elevation is the water-surface elevation of the 1% annual chance flood.

ZONE A	No Base Flood Elevations determined.
ZONE AE	Base Flood Elevations determined.
ZONE AH	Flood depths of 1 to 3 feet (usually areas of ponding); Base Flood Elevations determined.
ZONE AO	Flood depths of 1 to 3 feet (usually sheet flow on sloping terrain); average depths determined. For areas of alluvial fan flooding, velocities also determined.
ZONE AR	Special Flood Hazard Area formerly protected from the 1% annual chance flood by a flood control system that was subsequently decertified. Zone AR indicates that the former flood control system is being restored to provide protection from the 1% annual chance or greater flood.
ZONE A99	Area to be protected from 1% annual chance flood by a Federal flood protection system under construction; no Base Flood Elevations determined.
ZONE V	Coastal flood zone with velocity hazard (wave action); no Base Flood Elevations determined.
ZONE VE	Coastal flood zone with velocity hazard (wave action); Base Flood Elevations determined.

FLOODWAY AREAS IN ZONE AE

The floodway is the channel of a stream plus any adjacent floodplain areas that must be kept free of encroachment so that the 1% annual chance flood can be carried without substantial increases in flood heights.

OTHER FLOOD AREAS

ZONE X	Areas of 0.2% annual chance flood; areas of 1% annual chance flood with average depths of less than 1 foot or with drainage areas less than 1 square mile; and areas protected by levees from 1% annual chance flood.

OTHER AREAS

ZONE X	Areas determined to be outside the 0.2% annual chance floodplain.
ZONE D	Areas in which flood hazards are undetermined, but possible.

COASTAL BARRIER RESOURCES SYSTEM (CBRS) AREAS

OTHERWISE PROTECTED AREAS (OPAs)

CBRS areas and OPAs are normally located within or adjacent to Special Flood Hazard Areas.

1% annual chance floodplain boundary

0.2% annual chance floodplain boundary

Floodway boundary

Zone D boundary

CBRS and OPA boundary

Boundary dividing Special Flood Hazard Area Zones and boundary dividing Special Flood Hazard Areas of different Base Flood Elevations, flood depths or flood velocities.

Limit of Moderate Wave Action

513	Base Flood Elevation line and value; elevation in feet*
(EL 987)	Base Flood Elevation value where uniform within zone; elevation in feet*

* Referenced to the North American Vertical Datum of 1988

A — A	Cross section line
23 - - - - 23	Transect line
87°07'45", 32°22'30"	Geographic coordinates referenced to the North American Datum of 1983 (NAD 83), Western Hemisphere
4976000mN	1000-meter Universal Transverse Mercator grid ticks, zone 18
600000 FT	5000-foot grid values: New York State Plane coordinate system, Central zone (FIPSZONE 3102), Transverse Mercator projection
DX5510 ×	Bench mark (see explanation in Notes to Users section of this FIRM panel)
● M1.5	River Mile

MAP REPOSITORY
Refer to listing of Map Repositories on Map Index

EFFECTIVE DATE OF COUNTYWIDE
FLOOD INSURANCE RATE MAP

EFFECTIVE DATE(S) OF REVISION(S) TO THIS PANEL

For community map revision history prior to countywide mapping, refer to the Community Map History table located in the Flood Insurance Study report for this jurisdiction.

To determine if flood insurance is available in this community, contact your Insurance agent or call the National Flood Insurance Program at 1-800-638-6620.

N

MAP SCALE 1" = 500'

250 0 500 1000 FEET

150 0 150 300 METERS

NFIP

NATIONAL FLOOD INSURANCE PROGRAM

PANEL 0329F

FIRM

FLOOD INSURANCE RATE MAP

for BROOME COUNTY, NEW YORK
(ALL JURISDICTIONS)

CONTAINS:

COMMUNITY	NUMBER
ENDICOTT, VILLAGE OF	360045
UNION, TOWN OF	360056
VESTAL, TOWN OF	360057

PRELIMINARY
FEBRUARY 5, 2010

PANEL 329 OF 651
MAP SUFFIX: F
(SEE MAP INDEX FOR FIRM PANEL LAYOUT)

Notice to User: The **Map Number** shown below should be used when placing map orders; the **Community Number** shown above should be used on insurance applications for the subject community.

MAP NUMBER
36007C0329F

MAP EFFECTIVE

Federal Emergency Management Agency

Attachment 4

Floodplain Management (EO 11988) and Wetlands Protection (EO 11990) Plan

Robert Street Stormwater Pump Station Upgrade - Town of Vestal
Floodplain Management EO 11988 and Wetlands Protection EO 11990 Determination
Community Reconstruction Program within NY State Community Development Block Grant Disaster Recovery Program
December 30, 2016

Introduction & Overview - The purpose of Executive Order 11988, Floodplain Management, is "to avoid to the extent possible the long- and short-term adverse impacts associated with occupancy and modification of floodplains and to avoid direct or indirect support of floodplain development wherever there is a practicable alternative." The purpose of Execute Order 11990, Protection of Wetlands, is "to avoid to the extent possible the long- and short-term adverse impacts associated with the destruction or modification of wetlands and to avoid direct or indirect support of new construction in wetlands wherever there is a practicable alternative." This plan contains the analysis prescribed by 24 CFR Part 55.

This project involves Community Development Block Grant Program – Disaster Recovery (CDBG-DR) funding for the conversion of a defunct sanitary pump station to a stormwater pump station. The existing sanitary pump station is out of service and the project proposes to convert the pump station into a serviceable stormwater pump station. This project will prevent flooding of the surrounding neighborhood that had occurred during large storms such as Tropical Storm Lee. The analysis that follows focuses on floodplain and wetland impacts, as there are direct wetland impacts associated with this project. Based on the type of land use and facility and other case characteristics described herein, it is concluded that there is a reasonable basis to proceed with funding for this project/ activity within floodplain and wetland. The CDBG-DR funding is administered through the New York State Rising Community Reconstruction Program which is using bottom-up community participation and State-provided technical expertise to develop resilient and sustainable communities. Thus, alternatives preventing or impeding the development of resilient and sustainable communities are not considered reasonable alternatives.

Description of Proposed Action & Land Use
The existing, out of service pump station is located at 549 Vestal Parkway, Town of Vestal, Broome County, New York. County tax records identify the property as Section 173.21 Block 1 Lot 5. The zoning for the parcel is "Public Services, 821", which is designated as land used for the accumulation, storage, or diversion of water for flood control purposes only. The county data shows the parcel to be 0.13 acres.

The proposed support involves a limited grant award of approximately $1.2 million dollars for the conversion of the sanitary pump station into a stormwater pump station. The proposed work comprises the combined use of the converted pump station and its two new outfall pipes in order to drain stormwater into the Choconut Creek. The project will also involve the construction of a 36-inch diameter gravity flow influent pipe that will run adjacent to NYS Route 434. This pipe will run from a proposed concrete influent structure that will be built near the northwestern limit of Elizabeth Street. Included in this structure will be a sharp-crested rectangular weir gate to control the flow diverted to the pump station. Electrical service is also proposed to be installed underground from a nearby 3-phase utility pole located adjacent to NYS Route 434. The electric service is proposed to run along the area of the concrete influent structure and follow underground within the vicinity of the 36-inch diameter gravity flow influent pipe to the existing Robert Street Pump Station.

The current above-grade pump station structure will be removed and replaced with a pavilion-type structure. Stormwater is proposed to flow over an operator adjustable weir level to enter a concrete influent structure located adjacent to the existing stormwater drainage ditch. Water will travel from the influent weir structure through a 36" smooth interior corrugated polyethylene pipe to the pump station. The below-grade pump station infrastructure will be repurposed in-place and will include the installation of two 100-HP submersible pumps with interior station piping and valves. Dual 24-inch effluent force mains will be

installed from the existing pump station location and will end with duckbill check valves at the discharge points in the adjacent Choconut Creek. The pipes will be positioned from the southern side of the pump station and will turn west to be approximately perpendicular to the adjacent swale and levee. The effluent force main pipes will be approximately 225 feet in length. Two air release valve manholes will also be constructed along these force main lines. The project will involve excavation and grading in order to install the washed gravel piping bed and for fill placement over the piping after the piping is installed. Minor excavation will be necessary to install supports in the swale between the levee and the pump station. Piping will be mounted on the supports so that it rests at an above-ground level over the swale location. The piping will be supported so that the section running across the swale is above ground, and the pipe sections installed on the levee will be installed on washed gravel bedding. The sections of pipe on the levee will be filled over and seeded. The two pipes, which will be installed adjacent to each other, will be approximately 225 feet in length and the diameter of the pipes are proposed to be 24-inches in diameter, but could be up to 36 inches.

The pipe section on the levee will be overlain with topsoil and seeded. Native vegetation will be used to reseed the disturbed area and all topsoil and gravel used will be clean so as not to introduce contaminants into the area. The proposed pipe outfall locations will be placed over the levee and down the side of the Choconut Creek streambank. The outfall locations of the pipes on the bank of Choconut Creek will require the installation of a concrete headwall, and rip rap will be placed below the outfall to prevent erosion. The pipes will be installed in a concrete headwall, with rip rap a minimum of two feet deep and keyed in to the existing slope for a minimum of two feet to prevent movement and erosion during high flow events in the Choconut Creek. Additionally, a paved access road will be extended off Robert Street, to the northwestern side of the pump station. This access road will include compacted granular backfill, a geogrid fabric placed on prepared subgrade, 12 inches of a crushed stone subbase per NYSDOT 304.12, and new asphalt cover with a 2-foot shoulder. The pipes will be installed using concrete anchors to prevent movement and damage during high flow events in the Choconut Creek.

Applicable Regulatory Procedure Per EO 11988

The proposed action corresponds with a noncritical action not excluded under 24 CFR §55.12(b) or (c). Funding is permissible for the use in the floodplain and wetland if the proposed action is processed under §55.20 and the findings of the determination are affirmative to suggest that the project may proceed.

This work will be located in 100-year floodplain (SHFA Zone AE) and within federal riverine wetlands. Approximately 0.18 acres of wetlands will be temporarily disturbed and approximately 0.63 acres of floodplain will be temporarily disturbed during construction. Thus, in accordance with the decision-making process set forth in 24 CFR Part 55, this analysis focuses on floodplains and wetlands.

According to 24 CFR §55, the activity planned to rehabilitate an out of service sanitary pump station into a stormwater management pump station occurs in a community that is in the regular program of the National Flood Insurance Program (NFIP) and the community is currently in good standing. This project involves converting a defunct sanitary pump station to transport storm water runoff into Choconut Creek, and the full eight-step floodplain/wetland determination process in §55.20 is being followed. The following analysis examines each step in a floodplain management determination process.

***Step 1.* Determine Whether the Proposed Action is Located in the 100-year Floodplain (500-year for Critical Actions) or results in New Construction in Wetlands.**

The location of the proposed action, per the applicable FEMA flood map Firmette, is within 100-year floodplain (SFHA - AE Zone). There is an established Base Flood Elevation (BFE) of 830 feet at the approximate location of the outfall pipes. The project has the potential for minor temporary impacts into freshwater wetlands.

Step 2. Initiate Public Notice for Early Review of Proposal.
Because the proposed project is located in floodplain and wetland, the Governor's Office of Storm Recovery (GOSR) published an early notice that allowed for public and public agency input on the decision to provide funding assistance for certain reconstruction and development activities. The early public notice and 15-day comment period is complete. No public comments were received.

The early notice and corresponding 15-day public comment period started on December 12, 2016 with the "Notice of Early Public Review of a Proposed Activity in Wetlands and 100-Year Floodplain" being published in the Press & Sun Bulletin

The early notice and corresponding 15-day public comment period started on December 12, 2016 with the "Notice of Early Public Review of a Proposed Activity in Wetlands and 100-Year Floodplain" being published in the Press & Sun Bulletin newspaper, with the 15-day period expiring on December 27, 2016. The notice targeted local residents, including those in the floodplain. The notice was also sent to the following state and federal agencies on December 12, 2016: Federal Emergency Management Agency (FEMA); USFWS; U.S. Environmental Protection Agency (EPA); NYSDEC; and New York State Office of Emergency Management. The notice was also sent to Broome County and the Town of Vestal. (See **Attachments 1** and **2** of this Floodplain Management EO 11988 and Wetlands Protection EO 11990 Determination for the letter distributed to these agencies and the associated newspaper notice affidavit).

***Step 3.* Identify and Evaluate Practicable Alternatives to Locating the Proposed Action in a 100-year Floodplain (or 500-year Floodplain if a Critical Action) or Wetland.**
The residential area adjacent to the pump station suffered flooding damage during Tropical Storm Lee from ponding water in the neighborhood. Potential alternatives must be considered in order to try and mitigate the amount of damage to the pump station and the residential neighborhood from future flood events.

<u>Alternative 1: Pump Station Rehabilitation.</u>
Alternative 1 is the current proposal for the Project reviewed within this environmental review record. Three alternative pumps were examined as noted in the *Basis of Design Report* dated December 2015 and prepared by Barton & Loguidice, D.P.C. The pumps evaluated during the design of the Project plan included conventional submersible pumps, dry pit submersible pumps, and vertical turbine pumps. For each type of pump considered, the pump station would need to be sized accordingly to include two pumps that would be capable of alternating lead/lag pump operation. Both pumps would need to be able to run at the same time during times when the wet well reaches a set high level. This alternative is the preferred alternative because it limits new construction work and repurposes existing infrastructure, thus, limiting the amount of new construction required. This Project involves new construction to install stormwater conveyance piping, a weir, and outflow piping over the levee. The existing pump station structure will be re-purposed for floodwater conveyance. The detailed construction plans contained in the *Basis of Design Report (dated 12/2015)* are based upon a hydrologic analysis of the area.

<u>Alternative 2: Expand Stormwater Retention Capacity.</u>
Alternative 2 involves expanding the capacity of the stormwater retention basin located north of the existing pump station and north of NYS Route 434. This alternative would prevent flood waters from reaching an elevation of 815 feet in the NYSDEC stormwater retention basin and, therefore, prevent the flow of water from the stormwater retention basin to the south under NYS Route 434 and into the Robert Street Neighborhood. This alternative could entail deepening the existing NYSDEC stormwater retention basin and/ or potentially expanding its area. However, this Project is not considered feasible because the existing basin is bound on the south by NYS Route 434, to the West by Choconut Creek, to the north by NYS Route 17 and to the east by private property. These existing boundaries limit the area available for the potential expansion of the stormwater retention basin. As the entire Robert Street Neighborhood is located within the 100-year floodplain per preliminary FIRM data, it might not be effective to alleviate flooding in this

neighborhood through increased water retention only. Additionally, any expansion of the NYSDEC stormwater retention basin could potentially affect habitat for plant and animal species or other resources (historic, cultural, etc.). Thus, it not likely that this is a viable alternative.

Alternative 3: Buyout - Relocate Local Residents and Convert the Neighborhood to Open Space.
Alternative 3 would involve buying out homes that are affected by flooding in the Robert Street Neighborhood. Although this alternative would alleviate damages caused by ponding and flooding in this neighborhood, it is not financially feasible to buyout all of the affected properties in this neighborhood. In addition, it could have an adverse impact on these affected residents and the character of the area. Thus, it not likely that this is a viable alternative.

Alternative 4: Elevate and/ or Floodproof Structures Prone to Flooding-related Damage.
Alternative 4 involves elevating structures and/ or floodproofing them in place. Elevating the structures in the neighborhood is not feasible due to cost constraints. In addition, many of the residential structures also have basements. Floodproofing areas below the base flood elevation in residential buildings is not permitted under the National Flood Insurance Program except in communities that have been granted an exception that permits floodproofed basements. The Town of Vestal has determined that floodproofing of the homes and businesses is not feasible option due to the cost of floodproofing the affected homes and business. Thus, it not likely that this is a viable alternative.

Alternative 5: No Action Alternative
The "no action" alternative means that there would be no rehabilitation and mitigation to the existing Robert Street Pump Station in the Town of Vestal and no work would be undertaken to alleviate the flood problem. This would leave the Robert Street Neighborhood and several commercial properties vulnerable to future flood damage from waters. The "no action" alternative would provide no protection to this residential neighborhood and greater community from future flood events, as mitigation would be compromised due to lack of financial support. Thus, the "no action" alternative is not feasible in relation to the desired objective of creating area resiliency to future flooding events.

The above identified alternatives will be re-evaluated in response to public comments received.

Step 4. **Identify & Evaluate Potential Direct & Indirect Impacts Associated with Occupancy or Modification of 100-year Floodplain and Potential Direct & Indirect Support of Floodplain Development that Could Result from Proposed Action.**
The focus of floodplain evaluation should be on adverse impacts to lives and property, and on natural and beneficial floodplain values. Natural and beneficial values include consideration of potential for adverse impacts on water resources such as natural moderation of floods, water quality maintenance, and groundwater recharge.

According to the FEMA Report - A Unified National Program for Floodplain Management, two definitions commonly used in evaluating actions in floodplain are "structural" and "non-structural" activities. Per the report, structural activity is usually intended to mean adjustments that modify the behavior of floodwaters through the use of measures such as public works dams, levees and channel work. Non-structural is usually intended to include all other adjustments (e.g., regulations, insurance, etc.) in the way society acts when occupying or modifying a floodplain. These definitions are used in describing impacts that may arise in association with potential advancement of this case.

Natural moderation of floods
As the applicant's site is one of many developed parcels situated within 100-year floodplain, the continued occupancy may potentially result in future direct impacts to Town-owned property during certain severe floods and related natural disasters. However, the direct effects to this property would be no greater than

those expected to the other adjacent occupied properties within this floodplain. Moreover, this property would be designed to mitigate flood damages and to withstand flood conditions.

Living resources such as flora and fauna
This surrounding land use may constitute a type of area where, after flooding, materials used by residents could potentially be released as floatable debris and contribute to litter and if there were minor amounts of chemicals used on site, floodwaters may induce rapid dilution. Given the nature of the project, which is the conversion of infrastructure to a stormwater pump station for flood control measures, the potential for an acute or chronic level of water quality impact from this project is low.

Impacts to Property & Lives
The action does not present potential to impact occupancy of floodplain as it does not involve a structure that is inhabited by people. The project will improve the resiliency of the surrounding residential properties to flood events. The functionally dependent project will occur within floodplain and floodway and will mitigate future flooding. The project is not expected to change land use of the project area and does not alter base flood elevations.

Occupancy of this floodplain in this developed area has taken place over an extended period. According to Broome County's All-Hazard Mitigation Plan, January 2013, the Town of Vestal has a "medium" hazard ranking for floods, with a history of frequent severe storms and flooding. Considering the context of the area - this action represents an activity at only one parcel among many that are located within contiguous floodplain and it will improve resiliency of the neighboring properties to floods. Thus, funding this project/activity does constitute continued support of floodplain development. In the event of severe flooding and associated natural hazards in the future, there is potential for damage to this property and impacts to this flood control property.

The conversion of a defunct sanitary pump station to a stormwater pump station to alleviate flooding in the area sustains area property values and community character within a developed district and neighborhood. It enables flood control measures to be implemented in order to reduce and/ or eliminate flooding from ponding water in the adjacent neighborhood. Similarly, the proposed investment supports the Town by improving flood resiliency and by allowing Town emergency and support services to focus resources elsewhere during flooding events. If this project were not funded, there probably would be other undefined, undesirable indirect impacts to lives in the area, on a short- and long-term basis, such as declining property value and subsequently a decrease in the Town's tax base.

Cultural resources such as archaeological, historic & recreational aspects
The property impacted houses a pump station adjacent to Choconut Creek in the Town of Vestal, New York. Based on a Section 106 project review, in accordance with a determination by the State Historic Preservation Office (SHPO) received on January 21, 2016, this project will have no effect on historic properties or cultural resources. Without support, existing infrastructure would degrade and there would remain a need to alleviate flooding during storm events for the surrounding neighborhood.

Agricultural, aquacultural, & forestry resources
The Town of Vestal is located south of the Susquehanna River and north of the Pennsylvania border. Historically, lumbering was the leading industry in this town. The area of the proposed project is a suburban area, and the Town of Vestal also encompasses woodland and agricultural lands. It is possible that if there is a materials release from this property such as damage to the new structure in a severe storm, it could potentially affect natural resources including the forestry and agricultural resources. However, while it is conceivable that flooding of the pump station could be part of a cumulative influence on such resources, the impact attributable to this use could have not been quantitatively derived and the potential impact, with planning for and practice of management practices and engineering design, is considered minor.

Wetland Evaluation
The purpose of wetland evaluation is to consider factors relevant to a proposal's effect on the survival and quality of the wetland. These factors should include public health (including water supply and water quality), maintenance of natural systems, cost increases attributed to construction in wetland, and other uses of wetland in the public interest.

Public health, safety, and welfare, including water supply, quality, recharge, and discharge; pollution; flood and storm hazards and hazard protection; and sediment and erosion.
The project location is adjacent to a Standard C and Class C stream (NYSDEC) and riverine wetland (USFWS). These wetlands are freshwater wetlands and, therefore, are not directly used for water supply. Additionally, the construction of the outfall pipe location is not suspected to pose a threat to public health and safety, or to increase flood and storm hazards. This is because the proposed action does not include reshaping, dredging, or filling of the wetland. The proposed action will not decrease the area of the wetland as all proposed work performed is located above the mean high water mark.

Maintenance of natural systems, including conservation and long-term productivity of existing flora and fauna; species and habitat diversity and stability; natural hydrologic function; wetland type; fish; wildlife; timber; and food and fiber resources.
The proposed action will not further affect the natural systems/ wetlands at this existing waterway, which is located in an area that is primarily developed with residential and commercial properties. The proposed work is for the conversion of an existing sanitary pump station and the outfall pipe at Choconut Creek. The Applicant shall comply with all best management practices and permit conditions that are set forth in the applicable federal, state, and local environmental permits, when and as they are acquired. As the work will not increase the area of the existing pump station, it is presumed that there will not be new adverse impacts on the existing flora/fauna, habitat, natural hydrologic function, or natural resources at the location.

Cost increases attributed to wetland-required new construction and mitigation measures to minimize harm to wetlands that may result from such use.
The proposed scope of work does not involve changing the area of the wetland by dredging, diking, filling, or by other means. Consequently, there are no cost increases attributed to necessary mitigation measures to minimize harm to wetlands that may result from such use.

Other uses of wetland in the public interest, including recreational, scientific, and cultural uses.
This pump station is proposed to decrease the future flooding impacts on the surrounding community, allowing for future resiliency and recovery. According to the Outdoor Industry Association's two-page fact sheet New York The Outdoor Recreation Economy, outdoor recreation generates $338 Billion in consumer spending and 305,000 direct jobs within the State. This is an important sector of the regional and local economy and the proposed project will protect the constituent part of this aspect of the economic base from future flood events.

***Step 5.* Where Practicable, Design or Modify the Proposed Action to Minimize the Potential Adverse Impacts To and From the 100-Year Floodplain and to Restore and Preserve its Natural and Beneficial Functions and Values.**
Given the scope of work and the proposed funding support, it is a direct policy requirement to specify standards that mitigate flood risk. Due to the location of the pump station in floodplain and the substantial improvement the pump station will undergo, the upgrade of the pump station is considered a mitigation measure to reduce flooding to other structures in the floodplain. The project is not anticipated to increase impervious surface area, and pumps within the pump station will be designed and constructed so that water will not damage electrical and mechanical components.

***Step 6.* Reevaluate the Alternatives and Proposed Action.**
The relocation alternatives would cost more money than the proposed project. The buyout of the adjacent residential properties for conversion into open space would eliminate the need for a project to mitigate flooding, but this alternative would displace multiple residents and cost more than the projected cost of the proposed project. The Town of Vestal has determined that the future use of this out of service pump station is appropriate because the project will alleviate flooding to residents of the Town of Vestal, and it will make use of a Town-owned flood control property. Alternative options are not considered feasible due to cost constraints or because of the potential displacement of residents.

The "no action" alternative would not address the need for the Town of Vestal to reduce flooding in the area of the proposed action. Without funding this grant, the Town would not be able to implement flood these control measures and residents would continue to face unmitigated flood conditions during future storm events.

The impacts of these alternatives will be re-evaluated in response to any public comments received.

***Step 7.* Issue Findings and Public Explanation.**
It is the finding of this report that there is no better alternative than to provide funding for the conversion of the defunct sanitary pump station to a stormwater pump station. The location within floodplain and wetlands cannot be avoided due the functionally dependent use of the structure, which is to pump stormwater runoff into an adjacent creek to alleviate flooding in an adjacent neighborhood. However, not funding any actions would mean that the Town of Vestal would struggle to recover from future storm events.

A final notice, formally known as "Notice of Policy Determination" was published in accordance with 24 CFR 55, for a 15-day comment period. (See **Attachment 3** of this Floodplain Management EO 11988 and Wetlands Protection EO 11990 Determination for the letter distributed to the associated agencies). The 7-day comment period started with the Final Notice publishing in the Press & Sun Bulletin newspaper on December 30, 2016 and the 15-day period expires January 17, 2017.

***Step 8.* Continuing Responsibility of Responsible Entity & Recipient.**
The Governor's Office of Storm Recovery (GOSR), operating under the auspices of the New York State Homes and Community Renewal's (NYSHCR) Housing Trust Fund Corporation, is the responsible entity. The responsible entity will make available educational materials regarding best practices for structures located in floodplains. It is acknowledged there is a continuing responsibility by the responsible entity, New York State Housing Trust Fund/ Division of Homes and Community Renewal, to ensure, to the extent feasible and necessary, compliance with Steps 5 through 7.

Attachment 1
Notice of Early Public Review
Floodplain Management & Wetlands Protection
Executive Order 11988 & Executive Order 11990

Governor's Office of Storm Recovery

ANDREW M. CUOMO
Governor

LISA BOVA-HIATT
Executive Director

EARLY NOTICE OF A PROPOSED ACTIVITY IN A 100-YEAR FLOODPLAIN AND WETLAND

ROBERT STREET STORMWATER PUMP STATION UPGRADE
549 VESTAL PARKWAY, TOWN OF VESTAL
BROOME COUNTY, NEW YORK
DECEMBER 12, 2016

To: All interested Agencies, Groups, and Individuals

This is to give notice that the Governor's Office of Storm Recovery (GOSR), an office of the New York State Housing Trust Fund Corporation (HTFC), has received an application from Town of Vestal to use Community Development Block Grant – Disaster Recovery (CDBG-DR) funding from the NY Rising Community Reconstruction Program to implement the Robert Street Stormwater Pump Station Upgrade (hereinafter, the "Proposed Activity") and is conducting an evaluation as required by Executive Order 11988 and Executive Order 11990 in accordance with U.S. Department of Housing and Urban Renewal (HUD) regulations (24 CFR Part 55). There are three primary purposes for this notice. First, to provide the public an opportunity to express their concerns and share information about the Proposed Activity, including alternative locations outside of the floodplain and wetland. Second, adequate public notice is an important public education tool. The dissemination of information about floodplain and wetland facilitates and enhances governmental efforts to reduce the risks associated with the occupancy and modification of these special areas. Third, as a matter of fairness, when the government determines it will participate in actions taking place in floodplain and wetland it must inform those who may be put at greater or continued risk. Funding for the Proposed Activity will be provided by the HUD CDBG-DR program for storm recovery activities in New York State.

The Proposed Activity is needed to reduce flood risk to the surrounding neighborhood. Upon conversion of the existing defunct sanitary pump station, the stormwater pump station will drain a stormwater retention swale directly adjacent to the pump station when stormwater begins to pond within the adjacent neighborhood, thereby preventing or limiting flooding of the homes during future storm events.

The Proposed Activity entails converting the existing sanitary pump station. The proposed construction will occur within the existing pump station and will include two pipes installed in a westerly direction from the pump station over a levee adjacent to Choconut Creek, where two new outfall pipes will allow water to drain into Choconut Creek. Additionally, gravity flow piping will be placed in the drainage swale leading to the pump house in order to feed the ponding water into the pump house.

The Proposed Activity will result in impacts to 0.42 acres of 100-Year Floodplain and 0.01 acres of NWI-mapped wetlands. These impacts will consist of water runoff transportation from the retention swale located behind the levee to two outfall pipe locations on Choconut Creek.

Floodplain maps based on the FEMA Flood Insurance Rate Maps and wetlands maps based on the National Wetland Inventory and New York State Department of Environmental Conservation (NYSDEC) data have been prepared and are available for review with additional information at http://www.stormrecovery.ny.gov/environmental-docs.

Any individual, group, or agency may submit written comments on the Proposed Activity or request further information by contacting Lori A. Shirley, Certifying Officer, Governor's Office of Storm Recovery, 38-40 State Street, Hampton Plaza, Albany, NY 12207; email: NYSCDBG_DR_ER@nyshcr.org. Standard office hours are 9:00 AM to 5:00 PM Monday through Friday. For more information, call 518-474-0755. All comments received by December 27, 2016 will be considered.

Attachment 2
Notice of Early Public Review Affidavit
Floodplain Management & Wetlands Protection
Executive Order 11988 & Executive Order 11990

AFFIDAVIT OF PUBLICATION

0001786431, BGM-763490

PRESS & SUN-BULLETIN

State of New York
City of Binghamton
County of Broome, SS:

CECILIA HERNANDEZ being duly sworn, deposes and says she is the Principal Clerk of the Binghamton Press Company Inc., publisher of the following newspaper printed in Johnson City published in the City of Binghamton, New York and of general circulation in the Counties of Broome, Chenango, Delaware, Tioga, State of New York and Susquehanna County, State of Pennsylvania PRESS & SUN BULLETIN

A notice of which the annexed is a printed copy, was published on the following dates:

12/12/16

Subscribed and sworn to before me this 13th day of December 2016

Notary Public

Vilma Avelar
Notary Public State of New York
NO. 01AV6318411
Qualified in Westchester County
Commission Expires January 26, 2019

EARLY NOTICE OF A PROPOSED ACTIVITY IN A 100-YEAR FLOODPLAIN AND WETLAND

ROBERT STREET STORMWATER PUMP STATION UPGRA
549 VESTAL PARKWAY, TOWN OF VESTAL
BROOME COUNTY, NEW YORK

DECEMBER 12, 2016

To: All Interested Agencies, Groups, and Individuals

This is to give notice that the Governor's Office of Storm Recovery (GOSR), an office of the New York State Housing Trust Fund Corporation (HTFC), has received an application from Town of Vestal to use Community Development Block Grant – Disaster Recovery (CDBG-DR) funding from the NY Rising Community Reconstruction Program to implement the Robert Street Stormwater Pump Station Upgrade (hereinafter, the "Proposed Activity") and is conducting an evaluation as required by Executive Order 11988 and Executive Order 11990 in accordance with U.S. Department of Housing and Urban Renewal (HUD) regulations (24 CFR Part 55). There are three primary purposes for this notice. First, to provide the public an opportunity to express their concerns and share information about the Proposed Activity, including alternative locations outside of the floodplain and wetland. Second, adequate public notice is an important public education tool. The dissemination of information about floodplain and wetland facilitates and enhances governmental efforts to reduce the risks associated with the occupancy and modification of these special areas. Third, as a matter of fairness, when the government determines it will participate in actions taking place in floodplain and wetland it must inform those who may be put at greater or continued risk. Funding for the Proposed Activity will be provided by the HUD CDBG-DR program for storm recovery activities in New York State.

The Proposed Activity is needed to reduce flood risk to the surrounding neighborhood. Upon conversion of the existing defunct sanitary pump station, the stormwater pump station will drain a stormwater retention swale directly adjacent to the pump station when stormwater begins to pond within the adjacent neighborhood, thereby preventing or limiting flooding of the homes during future storm events.

The Proposed Activity entails converting the existing sanitary pump station. The proposed construction will occur within the existing pump station and will include two pipes installed in a westerly direction from the pump station over a levee adjacent to Choconut Creek, where two new outfall pipes will allow water to drain into Choconut Creek. Additionally, gravity flow piping will be placed in the drainage swale leading to the pump house in order to feed the ponding water into the pump house.

The Proposed Activity will result in impacts to 0.42 acres of 100-Year Floodplain and 0.01 acres of NWI-mapped wetlands. These impacts will consist of water runoff transportation from the retention swale located behind the levee to two outfall pipe locations on Choconut Creek.

Floodplain maps based on the FEMA Flood Insurance Rate Maps and wetlands maps based on the National Wetland Inventory and New York State Department of Environmental Conservation (NYSDEC) data have been prepared and are available for review with additional information at http://www.stormrecovery.ny.gov/environmental-docs.

Any individual, group, or agency may submit written comments on the Proposed Activity or request further information by contacting Lori A. Shirley, Certifying Officer, Governor's Office of Storm Recovery, 38-40 State Street, Hampton Plaza, Albany, NY 12207; email: NYSCDBG_DRER@nyshcr.org. Standard office hours are 9:00 AM to 5:00 PM Monday through Friday. For more information, call 518-474-0755. All comments received by December 27, 2016 will be considered.
12/12/2016

Attachment 3
Final Notice
Floodplain Management & Wetlands Protection
Executive Order 11988 & Executive Order 11990

Governor's Office of Storm Recovery

ANDREW M. CUOMO
Governor

LISA BOVA-HIATT
Executive Director

PUBLIC NOTICE
COMBINED FINAL NOTICE AND PUBLIC REVIEW OF A PROPOSED ACTIVITY IN A 100-YEAR FLOODPLAIN AND WETLAND, NOTICE OF FINDING OF NO SIGNIFICANT IMPACT (*FONSI*), AND NOTICE OF INTENT TO REQUEST RELEASE OF FUNDS (*NOI-RROF*)

ROBERT STREET STORMWATER PUMP STATION UPGRADE

DECEMBER 30, 2016

Name of Responsible Entity and Recipient: New York State Homes and Community Renewal (HCR), 38-40 State Street, Hampton Plaza, Albany, NY 12207, in cooperation with the New York State Housing Trust Fund Corporation (HTFC), of the same address. Contact: Lori A. Shirley (518) 474-0755.

Pursuant to 24 CFR Section 58.43, this combined Notice of Finding of No Significant Impact (FONSI), Notice of Intent to Request Release of Funds (NOI-RROF), and Final Notice and Public Explanation of a Proposed Activity in a Floodplain and Wetland satisfies three separate procedural requirements for project activities proposed to be undertaken by HCR.

Project Description: The Governor's Office of Storm Recovery (GOSR), an office of HCR's HTFC, is responsible for the direct administration of the United States Department of Housing and Urban Development (HUD) Community Development Block Grant – Disaster Recovery (CDBG-DR) program in New York State. GOSR proposes to provide CDBG-DR funding to the Town of Vestal for the Robert Street Stormwater Pump Station Upgrade. The proposed construction entails converting the existing sanitary pump station into a stormwater pump station at a neighborhood located adjacent to 549 Vestal Parkway, Town of Vestal, Broome County, New York (the "Proposed Project").

The proposed construction will occur within the existing pump station and will include two pipes installed in a westerly direction from the pump station over a levee adjacent to Choconut Creek, where two new outfall pipes will allow water to drain into Choconut Creek. Additionally, gravity flow piping will be placed in the drainage swale leading to the pump house in order to feed the ponding water into the pump house. This proposed project is estimated to have a total cost of $1,200,000.00 being provided by CDBG-DR.

PUBLIC EXPLANATION OF A PROPOSED ACTIVITY IN A 100-YEAR FLOODPLAIN AND WETLAND

This work will be located in 100-year floodplain (SHFA Zone AE) and federal riverine wetlands. Approximately 0.42 acres of floodplain will be disturbed and approximately 0.01 acres of wetlands will be disturbed during construction. Since the action will include new construction in wetland and floodplain, Executive Orders 11990 and 11988 require that the project not be supported if there are practicable alternatives to development in floodplain and new construction in wetlands.

There are three primary purposes for this notice. First, people who may be affected by activities in floodplain and wetlands and those who have an interest in the protection of the natural environment have

an opportunity to express their concerns and provide information about these areas. Second, adequate public notice is an important public education tool. The dissemination of information and request for public comment about floodplains/ wetlands can facilitate and enhance federal efforts to reduce the risks associated with the occupancy and modification of these special areas. Third, as a matter of fairness, when the federal government determines it will participate in actions taking place in floodplains/ wetlands, it must inform those who may be put at greater or continued risk.

FINDING OF NO SIGNIFICANT IMPACT

An Environmental Assessment (EA) for the Proposed Project has been prepared in accordance with the National Environmental Policy Act of 1969 (NEPA) and HUD environmental review regulations at 24 CFR Part 58. The EA is incorporated by reference into this FONSI. Subject to public comments, no further review of the Proposed Project is anticipated. HCR has determined that the EA for the project identified herein complies with the requirements of HUD environmental review regulations at 24 CFR Part 58. HCR has determined that the Proposed Project will have no significant impact on the human environment and, therefore, does not require the preparation of an environmental impact statement under NEPA.

Public Review: Public viewing of the EA and Floodplain Management Documents are available online at http://stormrecovery.ny.gov/environmental-docs and are also available in person Monday – Friday, 9:00 AM – 5:00 PM at the following address: Governor's Office of Storm Recovery, 38-40 State Street, Hampton Plaza, Albany, NY 12207. Contact: Lori A. Shirley (518) 474-0755.

Further information may be requested by writing to the above address, emailing NYSCDBG_DR_ER@nyshcr.org or by calling (518) 474-0755. This combined notice is being sent to individuals and groups known to be interested in these activities, local news media, appropriate local, state and federal agencies, the regional office of the U.S. Environmental Protection Agency having jurisdiction, and to the HUD Field Office, and is being published in a newspaper of general circulation in the affected community.

Public Comments on the Proposed Activity within Floodplain and Wetland, FONSI and/or NOIRROF: Any individual, group or agency may submit written comments on the Project. The public is hereby advised to specify in their comments which "notice" their comments address. Comments should be submitted via email, in the proper format, on or before January 17, 2017 at NYSCDBG_DR_ER@nyshcr.org. Written comments may also be submitted at the following address, or by mail, in the proper format, to be received on or before January 17, 2017: Governor's Office of Storm Recovery, 38-40 State Street, Hampton Plaza, Albany, NY 12207. Comments may be received by telephone by contacting Lori A. Shirley at (518) 474-0755. All comments must be received on or before 5:00 pm on January 17, 2017 or they will not be considered. If modifications result from public comment, these will be made prior to proceeding with the expenditure of funds.

REQUEST FOR RELEASE OF FUNDS AND CERTIFICATION

On or about January 18, 2017, the HCR certifying officer will submit a request and certification to HUD for the release of CDBG-DR funds as authorized by related laws and policies for the purpose of implementing this part of the New York CDBG-DR program.

HCR certifies to HUD that Lori A. Shirley, in her capacity as Certifying Officer, consents to accept the jurisdiction of the U.S. federal courts if an action is brought to enforce responsibilities in relation to the environmental review process and that these responsibilities have been satisfied. HUD's approval of the certification satisfies its responsibilities under NEPA and related laws and authorities, and allows GOSR to use CDBG-DR program funds.

Objection to Release of Funds: HUD will accept objections to its release of funds and GOSR's certification for a period of fifteen days following the anticipated submission date or its actual receipt of the request (whichever is later). Potential objectors may contact HUD or the GOSR Certifying Officer to verify the actual last day of the objection period.

The only permissible grounds for objections claiming a responsible entity's non-compliance with 24 CFR Part 58 are: (a) Certification was not executed by HCR's Certifying Officer; (b) the responsible entity has omitted a step or failed to make a decision or finding required by HUD regulations at 24 CFR Part 58; (c) the responsible entity has committed funds or incurred costs not authorized by 24 CFR Part 58 before release of funds and approval of environmental certification; or (d) another Federal agency acting pursuant to 40 CFR Part 1504 has submitted a written finding that the project is unsatisfactory from the standpoint of environmental quality.

Objections must be prepared and submitted in accordance with the required procedures (24 CFR Part 58) and shall be addressed to Tennille Smith Parker, Director, Disaster Recovery and Special Issues Division, Office of Block Grant Assistance, U.S. Department of Housing & Urban Development, 451 7th Street SW, Washington, DC 20410, Phone: (202) 402-4649.

Lori A. Shirley
Certifying Officer
December 30, 2016

Attachment 5

HUD Environmental Standards Review

Project: Robert Street Stormwater Pump Station Upgrade – Town of Vestal

Introduction: The purpose of this review is to ensure that the project complies with HUD environmental standards in relation to 24 CFR Part 58.5. -Properties that are proposed for use in HUD programs "must be free of hazardous materials, contamination, toxic chemicals and gases, and radioactive substances, where a hazard could affect the health and safety of occupants or conflict with the intended utilization of the property."

A desktop review was performed to identify whether the Property referenced in the title of this document complies with the following criteria:

(i) is not Listed on an EPA Superfund National Priorities or Comprehensive Environmental Response Superfund National Priorities or Comprehensive Environmental Response, Compensation, and Liability Act (CERCLA) List, or equivalent State list;
(ii) is not located within 3,000 feet of a toxic or solid waste landfill site;
(iii) does not have an underground storage tank; and
(iv) is not known or suspected to be contaminated by toxic chemicals or radioactive materials.

Project Description:
The Robert Street Stormwater Pump Station Upgrade – Town of Vestal (Project) involves the conversion of a defunct sanitary pump station to a stormwater pump station in a neighborhood adjacent to 549 Vestal Parkway, Town of Vestal, Broome County, New York in order to reduce flood risk to the surrounding neighborhood. Upon conversion, the pump station will drain a stormwater retention swale directly adjacent to the pump station when stormwater begins to pond within the adjacent neighborhood, thereby preventing or limiting flooding of the homes. Construction will occur within the existing pump station and will include two pipes installed in a westerly direction from the pump station over a levee adjacent to Choconut Creek. Additionally, gravity flow piping will be placed in the drainage swale leading to the pump station in order to feed the ponding water into the pump station.

Summary of Findings:
The property on which the pump station is located, the Subject Property, is not listed on a U.S. Environmental Protection Agency (EPA) Superfund National Priorities or Comprehensive Environmental Response, Compensation, and Liability Act (CERCLA) list or equivalent State list, and is not located within 3,000 feet of a toxic or solid waste landfill site. Based on review of the NYSDEC Bulk Storage database, the Subject Property does not have underground storage tanks, and is not known or suspected to be contaminated by toxic chemicals or radioactive materials. Moreover, a review of the NYSDEC Spill Incident database revealed no spills on the Subject Property.

There are 22 EPA listed permitted facilities located within 3,000 feet of the Subject Property. Of the 22 facilities, 20 have no violations reported at the facility and, therefore, are not considered a hazard that could affect the health and safety of occupants or conflict with the intended utilization of the Subject Property. Facilities with no permit violations are not considered a hazard because the facilities are in compliance with permit conditions that are enforced and meet standards that protect public health and the environment by preventing releases to the environment. Of the two remaining facilities, one of the facilities has no data available from the ECHO facility report. This facility, Vestal Water Supply, is listed under the New York State Superfund Site database. Vestal Water Supply is located on a 225-acre property located approximately 2,900 - 4,000 feet northeast from the Subject Property. The Vestal Water Supply site includes two supply wells located in Vestal, New York. The site is a municipal well contaminated by a bulk chemical handling facility. After contamination was discovered in 1980, the well was taken out of service. The well was returned to service in 1988. The well had been contaminated with volatile organic compounds (VOCs). VOCs are potentially harmful contaminants that can easily evaporate into the air. Similar contaminants

were detected in Well 1-1, which is located in Water District 1. The two were originally listed as one Superfund site and were later separated into two Superfund sites: Vestal Water Supply Well 1-1 and Vestal Water Supply Well 4-2. After immediate actions to protect public health and the environment, the site's long-term remedy was put in place. Following the completed construction of the site's remedy, EPA took the site off the Superfund Program's National Priorities List in September 1999. After immediate actions to protect public health and the environment, the site's long-term cleanup is ongoing. There are currently no human or environmental exposures to contaminated groundwater and soils. Surficial groundwater at this site flows northwest, according to NYSDEC reports. Additionally, a Remedial Investigation Amendment was issued on 9/30/2016. As such, this Superfund Site will not affect the Subject Property, which is located southwest of this Superfund Site.

The remaining EPA listed permitted waste water discharger facility is the Vestal MS4 Storm Sewers facility. This facility is located town-wide, and has two quarters in noncompliance, between 4/1/2014 and 9/30/2014, for both a schedule event violation and for violations found during a MS4 audit. Additionally, the audit determined that the Vestal MS4 system was in noncompliance with certain terms and conditions of the NYSDEC MS4 General Permit. Those violations included failure to fully implement and update the Stormwater Management Program Plan, failure to fully develop and implement an illicit discharge detection and elimination program, failure to fully develop and implement a stormwater construction program, failure to fully develop and implement a post-construction program, and failure to fully develop and implement a pollution prevention and good station-keeping program and complete self-assessments of municipal facilities as required. An Administrative Compliance Order was issued to order the Town of Vestal to comply with MS4 General Permit conditions, and a settlement was reached on 2/11/2015. Based on the EPA Toxic Release Inventory (TRI), no releases of hazardous substances from the facility have occurred. Any potential discharge from the sewer system would be diluted by and transported downstream by the Susquehanna River and the violations reported at this facility are associated with administrative schedule events being missed, this facility is unlikely to adversely affect the Subject Property or conflict with the intended utilization of the Subject Property.

Addresses within 1,000 feet of the Subject Property were searched on the NYSDEC Spill Incident Report database. There is one reported spill on nearby flood control property which consisted of an unknown amount of waste oil. This spill was closed by the NYSDEC on 10/21/1994. A spill being closed by the NYSDEC means that the records and data submitted indicate that the necessary cleanup and removal actions have been completed and no further remedial activities are necessary under this spill report number.

There are several bulk storage and hazardous waste handlers within a 3000-foot radius of the Subject Property. Babson Realty LLC is located 300 feet south of the Subject Property. Records show that tanks have been closed and removed from this site. Therefore, the site is not considered a hazard that would affect the quality of the environment at the Subject Property. Town of Vestal Property, Con-Way Eastern Express, Express Mart 320, Kwik-Fill, Petr All-Corp, Valvoline LLC, Quickway, Speedway, and Monro Muffler/ Brake are bulk storage facilities located east of the Subject Property across the Choconut Creek. These sites are not expected to pose a hazard to Project Site because the facilities are permitted and regulated under the NYSDCE bulk storage tank program which requires leak detection, containment, and monitoring. Additionally, no releases from the facilities have been identified in available data bases (TRI), these sites are not located close to the Project Location (see attached), and Choconut Creek acts as a hydraulic barrier for surficial ground water located between the sites and the Project Site. Vestal Senior High School, Quick Check Mini Mart, Windsor Central School District, Cole Muffler Inc, Mavis Tire Supply, Valvoline LLC, Firestone Complete Auto Repair, and Castrol Premium Lube Express are all bulk storage sites located greater than 2,500 feet from the Subject Property. These sites are not expected to pose a hazard to Project Site because the facilities are permitted and regulated under the NYSDCE bulk storage tank program which requires leach detection, containment and monitoring; no releases from the facilities have been identified

in available data bases (TRI); no violations have been reported for the facilities and the facilities are located greater than 2,500 feet from the Project Site.

A review of the EPA Resource Conservation and Recovery (RCRA) and NYSDEC Environmental Remediation databases provide no indication of past uses of the surrounding properties that could contaminate the Subject Property or potentially adversely affect the occupants of the adjacent properties. The project involves only minor excavation of soils near the pump station, which will remain onsite. If there are construction wastes generated, according to the type of waste generated, it will be appropriately disposed of according to construction waste management practices in an appropriate, legally compliant receiving facility.

Conclusion: Based on a review of available environmental records for the Subject Property and surrounding area, the Subject Property is unlikely to contain hazardous materials, contamination, toxic chemicals and gases, and radioactive substances, where a hazard could affect the health and safety of occupants or conflict with the intended utilization of the Subject Property.

Data Sources: Tectonic has reviewed the following sources to make the above determinations: Hazardous Waste records contained in the Resource Conservation and Recovery Act Information (RCRA), the Comprehensive Environmental Response, Compensation, and Liability Information System (CERCLIS) for sites listed under the Comprehensive Environmental Response, Compensation, and Liability Act (CERCLA (otherwise known as Superfund)), EPA's Toxic Release Inventory database (TRI), and the EPA Radiation Information Database (RADInfo). RCRA includes data on small and large quantity hazardous waste material generators and handlers. EPA's Toxic Release Inventory provides information on toxic chemical releases and waste management activities by certain industries. The RADInfo database provides information about facilities that are regulated by the U.S. EPA for radiation and radioactivity.

Tectonic reviewed the NYSDEC Remedial Site Database to assess whether the project site is registered as a NYS Superfund or Environmental Restoration site. The NYSDEC Remedial Database also includes records of sites that are part of the NYS Superfund, Brownfield Cleanup, Environmental Restoration, and Voluntary Cleanup Programs. The database also includes a Registry of Inactive Hazardous Waste Disposal Sites. The NYSDEC Bulk Storage Database was reviewed for records of facilities that are or have been regulated according to one of the Bulk Storage Programs – Petroleum Bulk Storage, Chemical Bulk Storage, or Major Oil Facility. The NYSDEC Bulk Storage Database was reviewed for records of facilities that are or have been regulated according to one of the Bulk Storage Programs- Petroleum Bulk Storage, Chemical Bulk Storage, or Major Oil Facility. The NYSDEC Spill Incident Database was used to determine the potential effects of spills on or near the Property. A desktop review of Google Earth was used in conjunction with a map of active municipal landfills (provided by the DEC), and a list of landfills provided by the DEC to determine whether a non-active or active landfill is located within 3,000 feet of the Subject Property.

Maps

Robert Street Stormwater Pump Station Upgrade

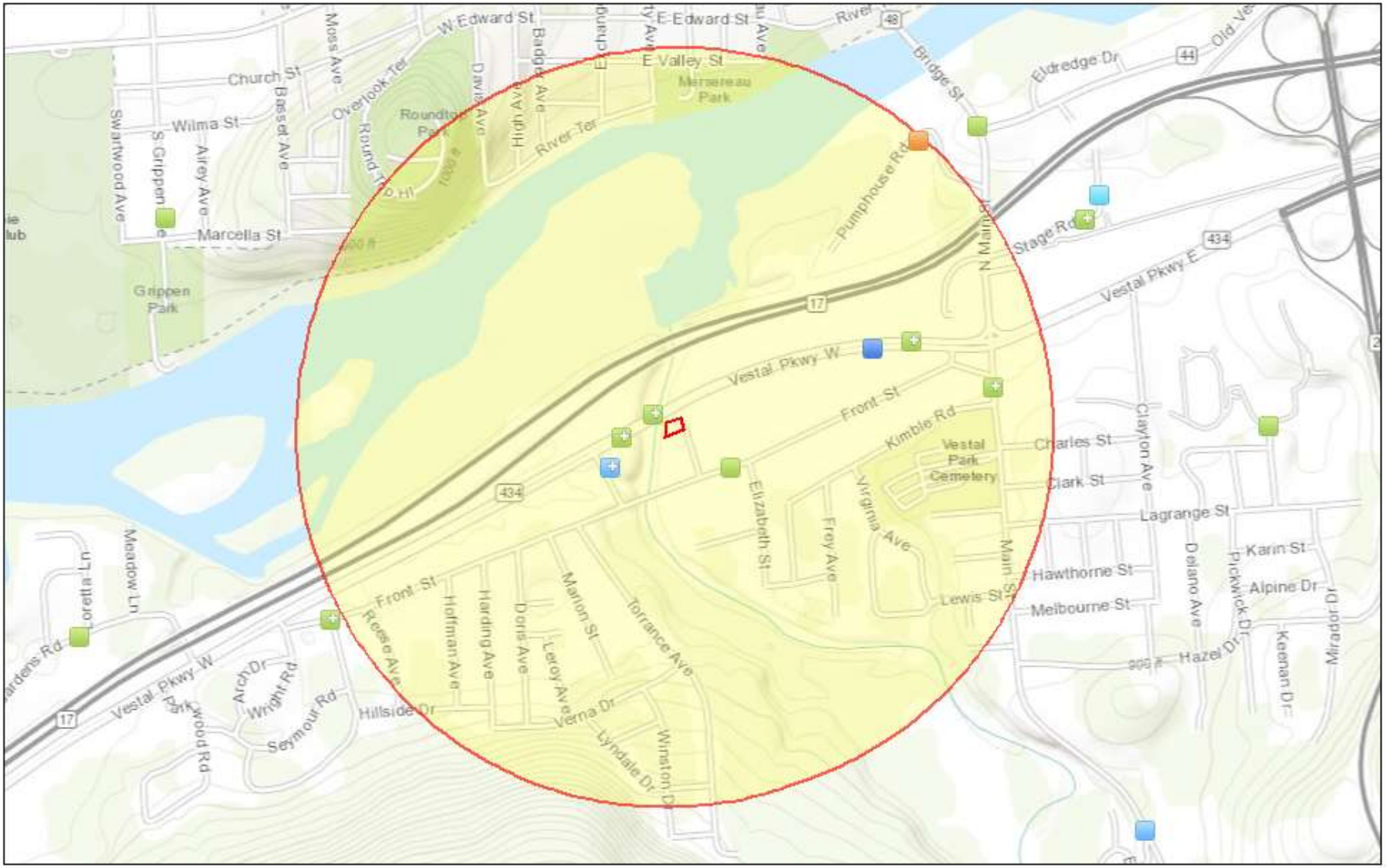

November 23, 2016

1:18,056

0 0.15 0.3 0.6 mi

0 0.25 0.5 1 km

- RCRAINFO (clustered)
- RCRAINFO (single)
- AIRS (single)
- PCS (clustered)
- PCS (single)
- TRI (single)
- CERCLIS (single)
- Project 1
- Buffer Area

Sources: Esri, HERE, DeLorme, Intermap, Increment P Corp., GEBCO, USGS, FAO, NPS, NRCAN, GeoBase, IGN, Kadaster NL, Ordnance Survey,

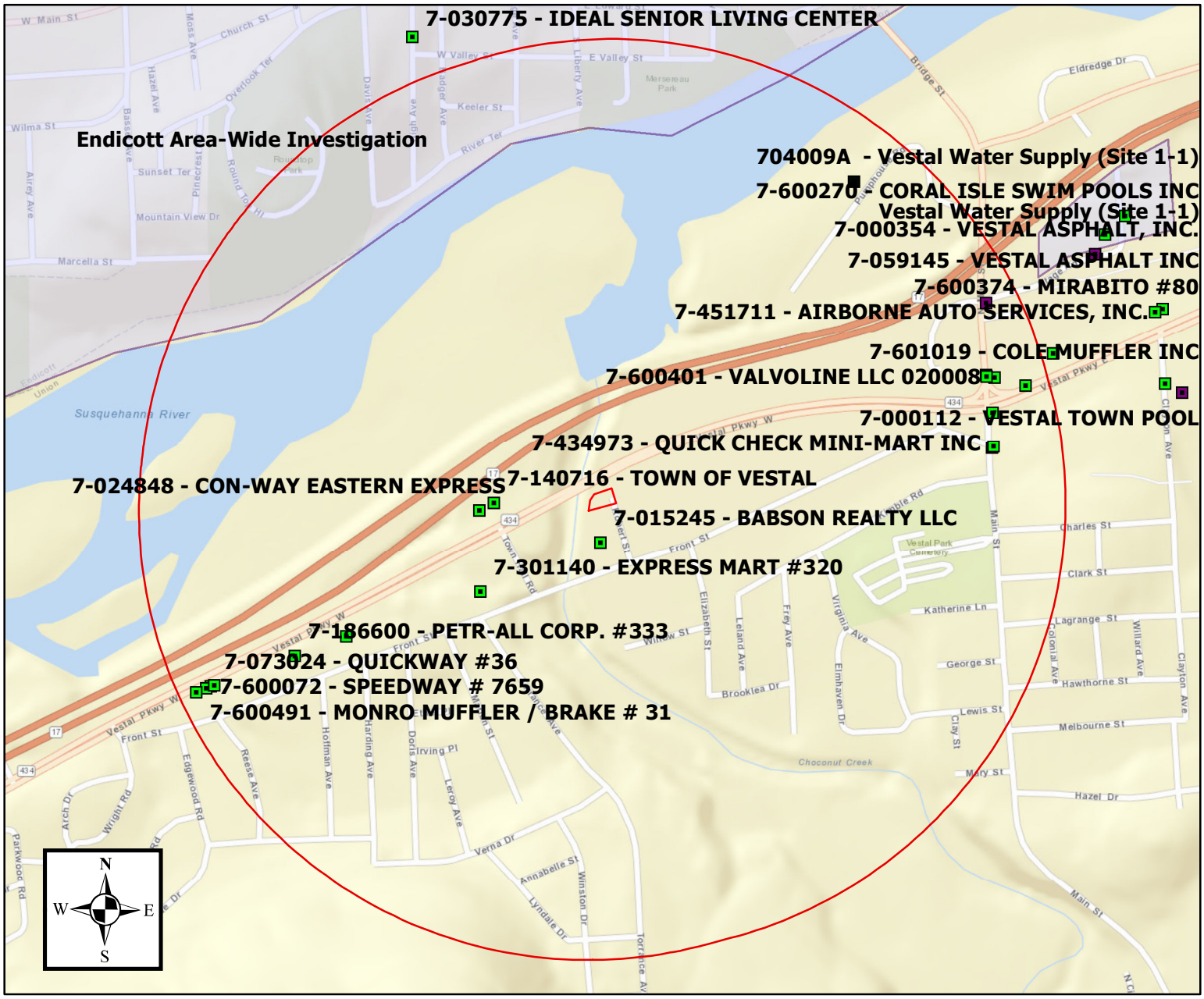

TECTONIC
Practical Solutions, Exceptional Service

0 375 750 1,500 Feet

1:12,000

Robert Street Stormwater Pump Station Upgrade
Robert Street
Vestal, NY
Broome County

Created: 11/23/2016
Source data: Environmental remediation sites listed in the NYSDEC Environmental Remediation Database. Properties listed on the NYSDEC Bulk Storage Database. Solid waste landfill information provide by NYSDEC.

Legend

- Robert Street Stormwater Pump Station (Approximate Boundary)
- Robert Street Stormwater Pump Station (3,000 ft buffer)
- Petroleum Bulk Storage
- Chemical Bulk Storage
- Major Oil Storage
- NYS Superfund
- Brownfield Cleanup
- Environmental Restoration
- Voluntary Cleanup
- EPA RCRA
- NYSDEC Environmental Site Borders
- Active Municipal Solid Waste Landfills

U.S. EPA Reports for Properties Contiguous to the Subject Property

Detailed Facility Report

Facility Summary

VESTAL MS4 STORM SEWERS

TOWN-WIDE, VESTAL, NY 13850

FRS (Facility Registry Service) ID: 110019290818
EPA Region: 02
Latitude: 42.084922
Longitude: -76.053496
Locational Data Source: NPDES
Industry: No description found
Indian Country: N

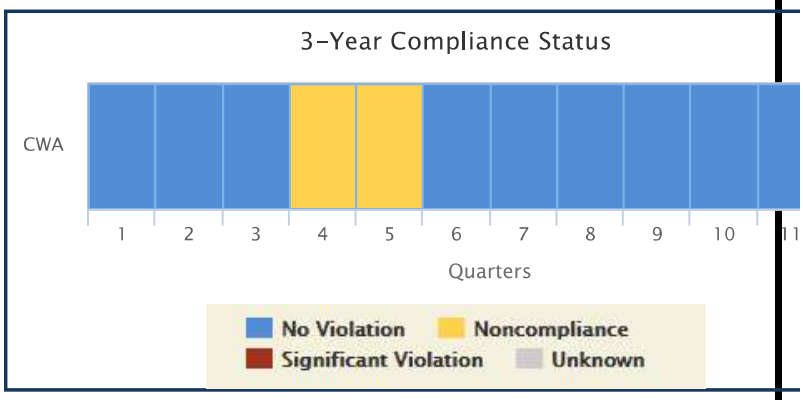

Enforcement and Compliance Summary

Statute	Insp (5 Years)	Date of Last Inspection	Compliance Status	Qtrs in NC (Non-Compliance) (of 12)	Qtrs in Significant Violation	Informal Enforcement Actions (5 years)	Formal Enforcement Actions (5 years)	Penalties from Formal Enforcement Actions (5 years)	EPA Cases (5 years)	Penalties from EPA Cases (5 years)
CWA	5	09/11/2014	**No Violation**	2	0	--	--	--	1	$0

Related Reports

- Enforcement Case Report
- CWA Pollutant Loading Report
- CWA Effluent Charts

Regulatory Information

Clean Air Act (CAA): No Information
Clean Water Act (CWA): Minor, Permit Effective (NYR20A064)
Resource Conservation and Recovery Act (RCRA): No Information
Safe Drinking Water Act (SDWA): No Information

Other Regulatory Reports

Air Emissions Inventory (EIS): No Information
Greenhouse Gas Emissions (eGGRT): No Information
Toxic Releases (TRI): No Information

Facility/System Characteristics

Facility/System Characteristics

System	Statute	Identifier	Universe	Status	Areas	Permit Expiration Date	Indian Country	Latitude	Longitude
FRS		110019290818					N	42.084922	-76.053496
ICP	CWA	NYR20A064	Minor: General Permit Covered Facility	Effective	Storm Water Small MS4s	04/30/2017	N	42.084922	-76.053496

Facility Address

System	Statute	Identifier	Facility Name	Facility Address
FRS		110019290818	VESTAL MS4 STORM SEWERS	TOWN-WIDE, VESTAL, NY 13850
ICP	CWA	NYR20A064	VESTAL MS4 STORM SEWERS	TOWN-WIDE, VESTAL, NY 13850

Facility SIC (Standard Industrial Classification) Codes

System	Identifier	SIC Code	SIC Desc
No data records returned			

Facility NAICS (North American Industry Classification System) Codes

System	Identifier	NAICS Code	NAICS Description

No data records returned

Facility Tribe Information

Reservation Name	Tribe Name	EPA Tribal ID	Distance to Tribe (miles)
No data records returned			

Enforcement and Compliance

Compliance Monitoring History (5 years)

Statute	Source ID	System	Inspection Type	Lead Agency	Date	Finding
CWA	NYR20A064	ICP	Audit	EPA	09/11/2014	
CWA	NYR20A064	ICP	Evaluation	State	09/11/2014	
CWA	NYR20A064	ICP	Evaluation	State	09/10/2014	
CWA	NYR20A064	ICP	Evaluation	State	09/09/2014	
CWA	NYR20A064	ICP	Evaluation	State	02/26/2013	

Entries in italics are not considered inspections in official counts.

Compliance Summary Data

Statute	Source ID	Current SNC (Significant Non-compliance)/HPV (High Priority Violation)	Description	Current As Of	Qtrs in NC (Non-Compliance) (of 12)
CWA	NYR20A064	No		06/30/2016	2

Three Year Compliance Status by Quarter

Statute	Program/Pollutant/Violation Type		QTR 1	QTR 2	QTR 3	QTR 4	QTR 5	QTR 6	QTR 7	QTR 8	QTR 9	QTR 10	QTR 11	QTR 12	QTR 13*
CWA (Source 1D: NYR20A064)			07/01-09/30/13	10/01-12/31/13	01/01-03/31/14	04/01-06/30/14	07/01-09/30/14	10/01-12/31/14	01/01-03/31/15	04/01-06/30/15	07/01-09/30/15	10/01-12/31/15	01/01-03/31/16	04/01-06/30/16	07/01-09/30/16
	Facility-Level Status		**No Viol**	**No Viol**	**No Viol**	**In Viol**	**In Viol**	**No Viol**	**No Viol**	**No Viol**	**No Viol**	**No Viol**	**No Viol**	**No Viol**	Und
	SNC (Significant Non-compliance)/RNC (Reportable Non-Compliance) History					V(NonRNCV)									
	Permit Schedule Violations														
CWA	Schedule Event achieved late but reported: MS4 Program Report					06-01-14-06-04-14									
	Single Event Violations	**NPDES Violation 1D**													
CWA	WW Storm Water MS4 - Failure to Conduct Inspections	3600785024					09-09-14-09-11-14								
CWA	WW Storm Water MS4 - Failure to Implement SWPPP/SWMP	3600785031					09-09-14-09-11-14								
CWA	WW Storm Water MS4 - Failure to Maintain Records or Meet Record Keeping Requirements	3600785032					09-09-14-09-11-14								
CWA	WW Storm Water MS4 - Failure to develop any or adequate SWPPP/SWMP	3600785028					09-09-14-09-11-14								

*Quarter 13 is draft/unofficial and has not been fully quality assured. Read more

Informal Enforcement Actions (5 Years)

Statute	Source ID	Type of Action	Lead Agency	Date
No data records returned				

Formal Enforcement Actions (5 Years)

Statute	Source ID	Type of Action	Lead Agency	Date	Penalty	Penalty Description
No data records returned						

ICIS (Integrated Compliance Information System) Case History (5 years)

Primary Law/Section	Case No.	Case Type	Lead Agency	Case Name	Issued/Filed Date	Settlement Date	Federal Penalty	State/Local Penalty	SEP (Supplemental Environmental Project) Cost	Comp Action Cost
CWA / §301/402	02-2015-3028	Administrative - Formal	EPA	Town of Vestal (MS4)	02/11/2015	02/11/2015	$0	$0	$0	$15,675

Environmental Conditions

Water Quality

Permit ID	Combined Sewer System?	Number of CSO (Combined Sewer Overflow) Outfalls	12-Digit WBD (Watershed Boundary Dataset) HUC (RAD (Reach Address Database))	WBD (Watershed Boundary Dataset) Subwatershed Name (RAD (Reach Address Database))	State Waterbody Name (ICIS (Integrated Compliance Information System))	Impaired Waters	Impaired Class	Causes of Impairment(s) by Group(s)	Watershed with ESA (Endangered Species Act)-listed Aquatic Species?
NYR20A064			020501030204	Lower Chocohut Creek		303(D) Listed	5	NUTRIENTS | PESTICIDES | SEDIMENT | TEMPERATURE	No

Waterbody Designated Uses

Reach Code	Waterbody Name	Exceptional Use	Recreational Use	Aquatic Life Use	Shellfish Use	Beach Closure Within Last Year	Beach Closure Within Last Two Years
02050103000041	Choconut Creek	No	No	No	No	No	No

Air Quality

Non-Attainment Area?	Pollutant(s)
No	Ozone
No	Lead
No	Particulate Matter
No	Sulfur Dioxide

Pollutants

Toxics Release Inventory History of Reported Chemicals Released in Pounds per Year at Site

TRI Facility ID	Year	Total Air Emissions	Surface Water Discharges	Off-Site Transfers to POTWs (Publicly Owned Treatment Works)	Underground Injections	Releases to Land	Total On-site Releases	Total Off-site Releases
No data records returned								

Toxics Release Inventory Total Releases and Transfers in Pounds by Chemical and Year

Chemical Name
No data records returned

Demographic Profile

Demographic Profile of Surrounding Area (3 Miles)

This section provides demographic information regarding the community surrounding the facility. ECHO compliance data alone are not sufficient to determine whether violations at a particular facility had negative impacts on public health or the environment. Statistics are based upon the 2010 US Census and American Community Survey data, and are accurate to the extent that the facility latitude and longitude listed below are correct. The latitude and longitude are obtained from the EPA Locational Reference Table (LRT) when available.

Radius of Area:	3	Land Area:	97%	Households in Area:	16,711
Center latitude:	42.082936	Water Area:	3%	Housing Units in Area:	18,046
Center Longitude:	-76.064933	Population Density:	1,370/sq.mi.	Households on Public Assistance:	427
Total Persons:	37,674	Percent Minority:	11%	Persons Below Poverty Level:	11,156

Race Breakdown	Persons (%)	Age Breakdown	Persons (%)
White:	34,339 (91.15%)	Child 5 years and younger:	2,091 (5.55%)
African-American:	1,385 (3.68%)	Minors 17 years and younger:	7,733 (20.53%)
Hispanic-Origin:	1,075 (2.85%)	Adults 18 years and older:	29,941 (79.47%)
Asian/Pacific Islander:	856 (2.27%)	Seniors 65 years and older:	6,885 (18.28%)
American Indian:	59 (.16%)		
Other/Multiracial:	1,035 (2.75%)		

Education Level (Persons 25 & older)	Persons (%)	Income Breakdown	Households (%)
Less than 9th Grade:	901 (3.36%)	Less than $15,000:	2,133 (12.7%)
9th through 12th Grade:	1,998 (7.45%)	$15,000 - $25,000:	2,181 (12.98%)
High School Diploma:	8,354 (31.17%)	$25,000 - $50,000:	4,718 (28.09%)
Some College/2-yr:	8,546 (31.89%)	$50,000 - $75,000:	3,293 (19.6%)
B.S./B.A. or More:	7,002 (26.13%)	Greater than $75,000:	4,473 (26.63%)

Civil Enforcement Case Report

()

Expand All (#) **Collapse All** (#)

Data Dictionary (help/reports/enforcement-case-report-data-dictionary)

Download Data () **Print (#)** **Help** (help/reports/enforcement-case-report-help)

Civil Enforcement Case(#)

Basic Information

Case Number: 02-2015-3028
Case Name: Town of Vestal (MS4)
Case Category: Administrative - Formal
Case Status (as of 02/11/2015): Closed
Case Lead: EPA
Court Docket Number: CWA-02-2015-3028
DOJ Docket Number: --

Relief Sought: --
Enforcement Outcome: Unilateral Administrative Order Without Adjudication
Headquarters Division: --
Branch: --
Result of Voluntary Disclosure? No
Multi-media Case? --
Enforcement Type: CWA 309A AO For Compliance
Violations: Violation Of A Permit Requirement

Penalties – Case Level

Total Federal Penalty Assessed or Agreed To: $0
Total State/Local Penalty Assessed: $0
Total SEP Cost: $0
Total Compliance Action Cost: $15,675
Total Cost Recovery: $0

Case Summary

Respondent is a permitted Phase II MS4 in New York. On September 9-11, 2014, an MS4 audit was conducted of the Respondent's system and it was determined that Respondent was not complying with certain terms and conditions of the NYSDEC MS4 General Permit. Violations include: failure to fully implement and update the Stormwater Management Program Plan, failure to fully develop and implement an illicit discharge detection and elimination program, failure to fully develop and implement a stormwater construction program, failure to fully develop and implement a post-construction

program, and failure to fully develop and implement a pollution prevention and good housekeeping program and complete self-assessments of municipal facilities as required. An Administrative Compliance Order is being issued to order Respondent to comply with MS4 General Permit conditions.

Laws and Sections

Law	Sections	Programs
CWA	301, 301/402	NPDES Discharge without a Permit, NPDES Permit Violations

Citations

Title	Part	Section
No data records returned		

Facilities

FRS Number	Facility Name	Address	City Name	State	Zip	SIC Codes	NAIC Codes
110019290818 (detailed-facility-report?fid=110019290818)	VESTAL MS4 STORM SEWERS	TOWN-WIDE	VESTAL	NY	13850	--	--

Defendants

Defendants and Settlements	In Complaint	In Settlement
Town of Vestal	N	Y

Case Milestones

Event	Actual Date
Enforcement Action Closed	02/11/2015
NPDES Closed	02/11/2015
Final Order Issued	02/11/2015
Enforcement Action Data Entered	02/12/2015

Pollutants

Pollutant Name	Chemical Abstract Number
No data records returned	

Related Activities

Description	Actual Date
Inspection/Evaluation	09/09/2014
Inspection/Evaluation	09/11/2014

Final Order 1(#)

Last updated March 16, 2016

Detailed Facility Report

Facility Summary

VESTAL WATER SUPPLY WELL 1-1

605 VESTAL PKWY, VESTAL, NY 13850

FRS (Facility Registry Service) ID: 110009303057
EPA Region: 02
Latitude: 42.0902
Longitude: -76.0557
Locational Data Source: CERCLIS
Industry: No description found
Indian Country: N

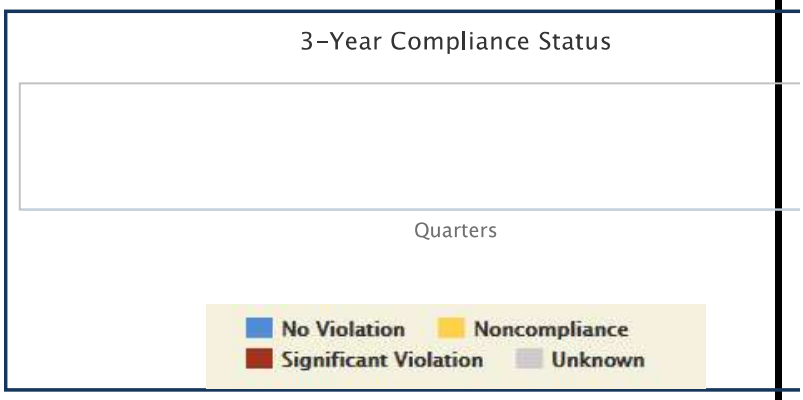

Enforcement and Compliance Summary

Statute	Insp (5 Years)	Date of Last Inspection	Compliance Status	Qtrs in NC (Non-Compliance) (of 12)	Qtrs in Significant Violation	Informal Enforcement Actions (5 years)	Formal Enforcement Actions (5 years)	Penalties from Formal Enforcement Actions (5 years)	EPA Cases (5 years)	Penalties from EPA Cases (5 years)
No data records returned										

Regulatory Information

Clean Air Act (CAA): No Information
Clean Water Act (CWA): No Information
Resource Conservation and Recovery Act (RCRA): No Information
Safe Drinking Water Act (SDWA): No Information

Other Regulatory Reports

Air Emissions Inventory (EIS): No Information
Greenhouse Gas Emissions (eGGRT): No Information
Toxic Releases (TRI): No Information

Facility/System Characteristics

Facility/System Characteristics

System	Statute	Identifier	Universe	Status	Areas	Permit Expiration Date	Indian Country	Latitude	Longitude
FRS		110009303057					N	42.0902	-76.0557

Facility Address

System	Statute	Identifier	Facility Name	Facility Address
FRS		110009303057	VESTAL WATER SUPPLY WELL 1-1	605 VESTAL PKWY, VESTAL, NY 13850

Facility SIC (Standard Industrial Classification) Codes

System	Identifier	SIC Code	SIC Desc
No data records returned			

Facility NAICS (North American Industry Classification System) Codes

System	Identifier	NAICS Code	NAICS Description
No data records returned			

Facility Tribe Information

Reservation Name	Tribe Name	EPA Tribal ID	Distance to Tribe (miles)
No data records returned			

Enforcement and Compliance

Compliance Monitoring History (5 years)

Statute	Source ID	System	Inspection Type	Lead Agency	Date	Finding
No data records returned						

Entries in italics are not considered inspections in official counts.

Compliance Summary Data

Statute	Source ID	Current SNC (Significant Non-compliance)/HPV (High Priority Violation)	Description	Current As Of	Qtrs in NC (Non-Compliance) (of 12)
No data records returned					

Three Year Compliance Status by Quarter

Informal Enforcement Actions (5 Years)

Statute	Source ID	Type of Action	Lead Agency	Date
No data records returned				

Formal Enforcement Actions (5 Years)

Statute	Source ID	Type of Action	Lead Agency	Date	Penalty	Penalty Description
No data records returned						

ICIS (Integrated Compliance Information System) Case History (5 years)

Primary Law/Section	Case No.	Case Type	Lead Agency	Case Name	Issued/Filed Date	Settlement Date	Federal Penalty	State/Local Penalty	SEP (Supplemental Environmental Project) Cost	Comp Action Cost
No data records returned										

Environmental Conditions

Water Quality

Permit ID	Combined Sewer System?	Number of CSO (Combined Sewer Overflow) Outfalls	12-Digit WBD (Watershed Boundary Dataset) HUC (RAD (Reach Address Database))	WBD (Watershed Boundary Dataset) Subwatershed Name (RAD (Reach Address Database))	State Waterbody Name (ICIS (Integrated Compliance Information System))	Impaired Waters	Impaired Class	Causes of Impairment(s) by Group(s)	Watershed with ESA (Endangered Species Act)-listed Aquatic Species?
No data records returned									

Waterbody Designated Uses

Reach Code	Waterbody Name	Exceptional Use	Recreational Use	Aquatic Life Use	Shellfish Use	Beach Closure Within Last Year	Beach Closure Within Last Two Years
No data records returned							

Air Quality

Non-Attainment Area?	Pollutant(s)
No	Ozone
No	Lead
No	Particulate Matter
No	Sulfur Dioxide

Pollutants

Toxics Release Inventory History of Reported Chemicals Released in Pounds per Year at Site

TRI Facility ID	Year	Total Air Emissions	Surface Water Discharges	Off-Site Transfers to POTWs (Publicly Owned Treatment Works)	Underground Injections	Releases to Land	Total On-site Releases	Total Off-site Releases
No data records returned								

Toxics Release Inventory Total Releases and Transfers in Pounds by Chemical and Year

Chemical Name
No data records returned

Demographic Profile

Demographic Profile of Surrounding Area (3 Miles)

This section provides demographic information regarding the community surrounding the facility. ECHO compliance data alone are not sufficient to determine whether violations at a particular facility had negative impacts on public health or the environment. Statistics are based upon the 2010 US Census and American Community Survey data, and are accurate to the extent that the facility latitude and longitude listed below are correct. The latitude and longitude are obtained from the EPA Locational Reference Table (LRT) when available.

Radius of Area:	3	Land Area:	97%	Households in Area:	19,358
Center latitude:	42.0902	Water Area:	3%	Housing Units in Area:	20,806
Center Longitude:	-76.0557	Population Density:	1,579/sq.mi.	Households on Public Assistance:	479
Total Persons:	43,482	Percent Minority:	11%	Persons Below Poverty Level:	12,615

Race Breakdown	Persons (%)	Age Breakdown	Persons (%)
White:	39,300 (90.38%)	Child 5 years and younger:	2,366 (5.44%)
African-American:	1,579 (3.63%)	Minors 17 years and younger:	8,853 (20.36%)
Hispanic-Origin:	1,239 (2.85%)	Adults 18 years and older:	34,629 (79.64%)
Asian/Pacific Islander:	1,338 (3.08%)	Seniors 65 years and older:	8,178 (18.81%)
American Indian:	70 (.16%)		
Other/Multiracial:	1,196 (2.75%)		

Education Level (Persons 25 & older)	Persons (%)	Income Breakdown	Households (%)
Less than 9th Grade:	1,014 (3.26%)	Less than $15,000:	2,480 (12.75%)
9th through 12th Grade:	2,069 (6.66%)	$15,000 - $25,000:	2,388 (12.28%)
High School Diploma:	9,356 (30.1%)	$25,000 - $50,000:	5,462 (28.09%)
Some College/2-yr:	9,813 (31.57%)	$50,000 - $75,000:	3,664 (18.84%)
B.S./B.A. or More:	8,827 (28.4%)	Greater than $75,000:	5,452 (28.04%)

NYSDEC Reports for Spills, Environmental Remediation Sites, or Bulk Storage Sites Located on or Within Close Proximity to the Site

NEW YORK STATE OF OPPORTUNITY | Department of Environmental Conservation

Spill Incidents Database Search Details

Spill Record

Administrative Information

DEC Region: 7
Spill Number: 9409290

Spill Date/Time

Spill Date: 10/11/1994 **Spill Time:** 12:00:00 PM
Call Received Date: 10/12/1994 **Call Received Time:** 12:15:00 PM

Location

Spill Name: FLOOD PROP. - VESTAL
Address: FRONT ST.
City: VESTAL **County:** Broome

Spill Description

Material Spilled	Amount Spilled	Resource Affected
waste oil/used oil	UNKNOWN	Soil

Cause: Deliberate
Source: Unknown
Waterbody:

Record Close

Date Spill Closed: 10/21/1994

"Date Spill Closed" means the date the spill case was closed by the case manager in the Department of Environmental Conservation (the Department). The spill case was closed because either; a) the records and data submitted indicate that the necessary cleanup and removal actions have been completed and no further remedial activities are necessary, or b) the case was closed for administrative reasons (e.g., multiple reports of a single spill consolidated into a single spill number). The Department however reserves the right to require additional remedial work in relation to the spill, if in the future it determines that further action is necessary.

If you have questions about this reported incident, please contact the Regional Office where the incident occurred.

Refine This Search

Environmental Site Remediation Database Search Details

Site Record

Administrative Information

Site Name: Vestal Water Supply (Site 1-1)
Site Code: 704009A
Program: State Superfund Program
Classification: 02
EPA ID Number:

Location

DEC Region: 7
Address: 200 STAGE ROAD
City: Vestal Zip: 13850
County: Broome
Latitude: 42.08977256
Longitude: -76.05684775
Site Type: STRUCTURE
Estimated Size: 225 Acres

Site Owner(s) and Operator(s)

Current Owner Name: TOWN OF VESTAL DPW
Current Owner(s) Address:
,ZZ,
Current Owner Name: Town of Vestal
Current Owner(s) Address: 605 Vestal Parkway East
Vestal,NY, 13850
Owner(s) during disposal: TOWN OF VESTAL DPW

Site Document Repository

Name: Vestal Public Library
Address: 320 Vestal Parkway
East Vestal,NY 13850
Name: USEPA Region 2
Address: 290 Broadway
18th Floor New York,NY 10007-1866

Hazardous Waste Disposal Period

From: unknown **To:** unknown

Site Description

Location: The Vestal Water Supply Well 1-1 site (Site) and study area consists of 225 acres in an urban industrial area. The onsite area is located on 200 Stage Road Vestal, Broome County, New York, along the southern side of the southern tier expressway. The off-site area (groundwater plume) is extends to Pump house Road, Vestal, Broome County, New York, along the southern bank of the Susquehanna River. Stage Road defines the southern boundary for the onsite property, while the Susquehanna River defines the northern Site boundary of the offsite property. The Susquehanna River flows from north east to south west. Site Features: The main Site feature for the offsite property is the volatile organic compound (VOC) removal plant for contaminated groundwater located at 32 Pump house Road. The pump house and treatment plant consists of the former water supply well 1-1A, now used for the purpose of extracting contaminated groundwater, pumps and air stripper. The pump house is a one-story concrete block building that contains distribution piping to connect the former municipal water supply well system to the air stripper. The air stripper consists of a 30-foot high packed column air stripper tower, blower fan, clear-well, and associated controls to operate the treatment plant. The other notable features of the Site are the industrial park located along Stage Road, the Town of Vestal well field (District 1), and the Susquehanna River. The onsite property consists of an industrial park which contains businesses including an asphalt plant, automotive repair facility, and a swimming pool contractor. The District 1 well field is located at the end of Pump house Road along the southern bank of the Susquehanna River, approximately 1,600 feet southwest of the treatment plant facility. Current Zoning/Use(s): The treatment plant parcel and the industrial park are currently zoned for industrial use. The industrial park contains an active asphalt plant, automotive repair facility, and swimming pool contractor. The surrounding properties are used for a combination of municipal, industrial, commercial, and residential purposes. Historical Use(s): Until 1980, Well 1-1 was the main source of water for Water District 1, which provides drinking water for several areas of the Town of Vestal. In 1982 the Site was placed on the National Priorities List (NPL) due to contamination of Well 1-1 with several VOCs, including 1,1,1-trichloroethane (1,1,1-TCA) and trichloroethene (TCE). Well 1-2 became the main source of water for District 1 until 1988 when it was replaced by Well 1-2A due to mechanical issues. Currently, two production wells, Wells 1-2A and 1-3, function as the main source of water for Water District 1. A Remedial Investigation/ Feasibility Study (RI/FS), was conducted by the New York State Department of Environmental Conservation (NYSDEC) under a cooperative agreement with the USEPA. The RI/FS recommended the construction of an air stripper for Well 1-1. The air stripper removed the contaminants from the extracted groundwater and served to control the migration of the contaminant plume in the groundwater beneath the industrial park. Construction of the air stripper was completed in late February of 1990. Well 1-1A was installed in 1993 to replace Well 1-1 due to production problems and is currently being used to pump groundwater to the air stripper. The groundwater pumped from Well 1-1A is passed through a packed column air stripping tower and then is discharged via gravity to a storm water discharge basin, which empties to the Susquehanna River. The NYSDEC assumed responsibility for the operation and maintenance (O&M) and monitoring of the air stripper facility in October 2006. A supplemental RI/FS was completed and a ROD for OU-2 was signed by USEPA in September of 1990. The remedial measure

specified in the ROD was soil vapor extraction (SVE) of Areas 2 and 4 within the Industrial Park. Remedial designs of in-situ SVE for the contamination in Areas 2 and 4 were completed in September 1994. Construction of the SVE system to treat contaminated soils in Area 2 was completed in January 1997. The Area 2 SVE system began operations on January 18, 1997 and was terminated on November 20, 2000, after results of an interim soil sampling program confirmed that the SVE system successfully achieved the cleanup goals specified in the ROD. Soil sampling was performed in Area 4 in September and October 2001 to further delineate the area of contamination and to refine the remedial design completed in September 1994. Construction of the Area 4 SVE system was started on April 1, 2003 and was completed on June 26, 2003. The Area 4 SVE system began operation in June 2003. In November 2005, the USEPA collected soil and groundwater samples to evaluate the effectiveness of the Area 4 SVE system. Results from the sampling indicated that very high levels of VOCs remained in the deeper portion of the unsaturated zone and in shallow portions of the saturated zone. The USEPA is conducting additional soil and groundwater sampling to delineate the horizontal and vertical extent of VOCs in Area 4. The results will be used to select and design additional treatment for the remaining VOC contamination at the Site. The Area 4 SVE system was shut down in January 2006 and will be restarted when the system is redesigned to address the remaining VOC contamination in the saturated and unsaturated zones. Related work within New York State designated OU-3 (Area #4) is currently conducted through the USEPA. Operable Units: The Site is divided into three operable units. An operable unit represents a portion of a remedial program for a site that for technical or administrative reasons can be addressed separately to investigate, eliminate or mitigate a release, threat of release or exposure pathway resulting from the site contamination. An air stripping facility was constructed for Well 1-1 by the USEPA in 1991 pursuant to an OU-1 ROD that was signed on June 27, 1986. A second Operable Unit (OU-2) ROD was signed on September 28, 1990, selecting in-situ vacuum extraction as the remedy for two discrete areas of contaminated soil (Area 2 and Area 4), located in the industrial park. Area # 4 was designated by the State as a separate Operable Unit (OU-3) in order to track the additional remedial needs of this area. October 2016 an Explanation of Significant Differences was signed addressing the source area. Site Geology: The site is underlain by a Primary Aquifer, generally consisting of valley fill deposits with highly-permeable alluvial sand and gravel. Groundwater flow in the vicinity of the industrial park in wells screened in the shallow groundwater monitoring zone (20 to 60 feet below ground surface (bgs)) is generally northwest toward the Well 1-1A groundwater treatment plant. Groundwater flow in the deep groundwater monitoring zone (112 to 150 feet bgs) is generally toward the southeast, parallel to the Susquehanna River. In general, the average depth to water in wells screened in the shallow groundwater monitoring zone is approximately 22 feet. The average depth to water in wells screened in the deep groundwater monitoring zone is approximately 16 feet. Current status: Based upon the continued presence of VOCs in soil and groundwater above the applicable SCGs, the Site is classified by the NYSDEC as a Class 2 inactive hazardous waste site.

Location: The Vestal Water Supply Well 1-1 site (Site) and study area consists of 225 acres in an urban industrial area. The onsite area is located on 200 Stage Road Vestal, Broome County, New York, along the southern side of the southern tier expressway. The off-site area (groundwater plume)

is extends to Pump house Road, Vestal, Broome County, New York, along the southern bank of the Susquehanna River. Stage Road defines the southern boundary for the onsite property, while the Susquehanna River defines the northern Site boundary of the offsite property. The Susquehanna River flows from north east to south west. Site Features: The main Site feature for the offsite property is the volatile organic compound (VOC) removal plant for contaminated groundwater located at 32 Pump house Road. The pump house and treatment plant consists of the former water supply well 1-1A, now used for the purpose of extracting contaminated groundwater, pumps and air stripper. The pump house is a one-story concrete block building that contains distribution piping to connect the former municipal water supply well system to the air stripper. The air stripper consists of a 30-foot high packed column air stripper tower, blower fan, clear-well, and associated controls to operate the treatment plant. The other notable features of the Site are the industrial park located along Stage Road, the Town of Vestal well field (District 1), and the Susquehanna River. The onsite property consists of an industrial park which contains businesses including an asphalt plant, automotive repair facility, and a swimming pool contractor. The District 1 well field is located at the end of Pump house Road along the southern bank of the Susquehanna River, approximately 1,600 feet southwest of the treatment plant facility. Current Zoning/Use(s): The treatment plant parcel and the industrial park are currently zoned for industrial use. The industrial park contains an active asphalt plant, automotive repair facility, and swimming pool contractor. The surrounding properties are used for a combination of municipal, industrial, commercial, and residential purposes. Historical Use(s): Until 1980, Well 1-1 was the main source of water for Water District 1, which provides drinking water for several areas of the Town of Vestal. In 1982 the Site was placed on the National Priorities List (NPL) due to contamination of Well 1-1 with several VOCs, including 1,1,1-trichloroethane (1,1,1-TCA) and trichloroethene (TCE). Well 1-2 became the main source of water for District 1 until 1988 when it was replaced by Well 1-2A due to mechanical issues. Currently, two production wells, Wells 1-2A and 1-3, function as the main source of water for Water District 1. A Remedial Investigation/ Feasibility Study (RI/FS), was conducted by the New York State Department of Environmental Conservation (NYSDEC) under a cooperative agreement with the USEPA. The RI/FS recommended the construction of an air stripper for Well 1-1. The air stripper removed the contaminants from the extracted groundwater and served to control the migration of the contaminant plume in the groundwater beneath the industrial park. Construction of the air stripper was completed in late February of 1990. Well 1-1A was installed in 1993 to replace Well 1-1 due to production problems and is currently being used to pump groundwater to the air stripper. The groundwater pumped from Well 1-1A is passed through a packed column air stripping tower and then is discharged via gravity to a storm water discharge basin, which empties to the Susquehanna River. The NYSDEC assumed responsibility for the operation and maintenance (O&M) and monitoring of the air stripper facility in October 2006. A supplemental RI/FS was completed and a ROD for OU-2 was signed by USEPA in September of 1990. The remedial measure specified in the ROD was soil vapor extraction (SVE) of Areas 2 and 4 within the Industrial Park. Remedial designs of in-situ SVE for the contamination in Areas 2 and 4 were completed in September 1994. Construction of the SVE system to treat contaminated soils in Area 2 was completed in January 1997. The Area 2 SVE system began operations on January 18, 1997 and was terminated on

November 20, 2000, after results of an interim soil sampling program confirmed that the SVE system successfully achieved the cleanup goals specified in the ROD. Soil sampling was performed in Area 4 in September and October 2001 to further delineate the area of contamination and to refine the remedial design completed in September 1994. Construction of the Area 4 SVE system was started on April 1, 2003 and was completed on June 26, 2003. The Area 4 SVE system began operation in June 2003. In November 2005, the USEPA collected soil and groundwater samples to evaluate the effectiveness of the Area 4 SVE system. Results from the sampling indicated that very high levels of VOCs remained in the deeper portion of the unsaturated zone and in shallow portions of the saturated zone. The USEPA is conducting additional soil and groundwater sampling to delineate the horizontal and vertical extent of VOCs in Area 4. The results will be used to select and design additional treatment for the remaining VOC contamination at the Site. The Area 4 SVE system was shut down in January 2006 and will be restarted when the system is redesigned to address the remaining VOC contamination in the saturated and unsaturated zones. Related work within New York State designated OU-3 (Area #4) is currently conducted through the USEPA. Operable Units: The Site is divided into three operable units. An operable unit represents a portion of a remedial program for a site that for technical or administrative reasons can be addressed separately to investigate, eliminate or mitigate a release, threat of release or exposure pathway resulting from the site contamination. An air stripping facility was constructed for Well 1-1 by the USEPA in 1991 pursuant to an OU-1 ROD that was signed on June 27, 1986. A second Operable Unit (OU-2) ROD was signed on September 28, 1990, selecting in-situ vacuum extraction as the remedy for two discrete areas of contaminated soil (Area 2 and Area 4), located in the industrial park. Area # 4 was designated by the State as a separate Operable Unit (OU-3) in order to track the additional remedial needs of this area. October 2016 an Explanation of Significant Differences was signed addressing the source area. Site Geology: The site is underlain by a Primary Aquifer, generally consisting of valley fill deposits with highly-permeable alluvial sand and gravel. Groundwater flow in the vicinity of the industrial park in wells screened in the shallow groundwater monitoring zone (20 to 60 feet below ground surface (bgs)) is generally northwest toward the Well 1-1A groundwater treatment plant. Groundwater flow in the deep groundwater monitoring zone (112 to 150 feet bgs) is generally toward the southeast, parallel to the Susquehanna River. In general, the average depth to water in wells screened in the shallow groundwater monitoring zone is approximately 22 feet. The average depth to water in wells screened in the deep groundwater monitoring zone is approximately 16 feet. Current status: Based upon the continued presence of VOCs in soil and groundwater above the applicable SCGs, the Site is classified by the NYSDEC as a Class 2 inactive hazardous waste site.

Summary of Project Completion Dates

Projects associated with this site are listed in the Project Completion Dates table and are grouped by Operable Unit (OU). A site can be divided into a number of operable units depending on the complexity of the site and the number of issues associated with a site. Sites are often divided into operable units based on the media to be addressed (such as groundwater or contaminated soil), geographic area, or other factors.

Project Completion Dates

Summary of Project Completion Dates

Projects associated with this site are listed in the Project Completion Dates table and are grouped by Operable Unit (OU). A site can be divided into a number of operable units depending on the complexity of the site and the number of issues associated with a site. Sites are often divided into operable units based on the media to be addressed (such as groundwater or contaminated soil), geographic area, or other factors.

Project Completion Dates

Contaminants of Concern (Including Materials Disposed)

Contaminant Name/Type

1,1,1-TCA

Site Environmental Assessment

Nature and extent of contamination: OU-1 Prior to Remediation: Based on investigations conducted to date, the primary contaminants of concern for OU-1 were 1,1,1-TCA and TCE in groundwater. The horizontal extent of groundwater impacted by VOCs was approximately 45 acres and encompassed the area of the industrial park, northwest to Well 1-1, and from Well 1-1 toward the southwest, parallel to the Susquehanna River. The concentrations of these compounds exceeded the applicable Standards in wells screened in the shallow (20 to 60 feet bgs) and deep (112 to 150 feet bgs) groundwater monitoring zones. Historic groundwater concentrations of total VOCs in the vicinity of the industrial park were highest in the southeast area of the industrial park (12,840 ug/L). Historic concentrations of 1,1,1-TCA and TCE in groundwater samples from Well 1-1 were 1,600 ug/L and 470 ug/L, respectively, exceeding the NYSDEC Class GA Standard of 5 ug/L. OU-1 Post Remediation: Recent groundwater data indicate 1,1,1-TCA, TCE, and their associated degradation products, remain as the primary COCs in groundwater for OU-1. The horizontal extent of groundwater impacted by VOCs is approximately 45 acres and encompasses the area of the industrial park, northwest to Well 1-1 A (the replacement well for Well 1-1). High concentrations of 1,1,1-TCA and TCE continue to be detected in shallow groundwater samples collected from the central area of the industrial park. The concentrations of these compounds in Well 1-1A were 240 ug/L and 61 ug/L, respectively. Treated groundwater from the air stripper facility meets NYSDEC Class GA Standards. OU-2 Prior to Remediation: Based on investigations conducted to date, the primary contaminants of concern for OU-2 (Area 2 and Area 4) were 1,1,1-TCA, TCE, trans-1,2-dichloroethene (trans-1,2-DCE), and tetrachloroethene (PCE). Sub-surface soil in Area 2 and Area 4 also contained chromium, copper, and lead. In addition, sub-surface soil in Area 4 contained the semi-volatile organic compounds (SVOCs) naphthalene, 2-methylnapthalene, phenanthrene, and bis(2-ethylhexyl)phthalate. Area 2 is approximately 0.4 acres and Area 4 is approximately 1.4 acres. The maximum concentrations of VOCs in soil samples from Area 2 and Area 4 were reported at percent levels (by weight). Percent-

level concentrations of SVOCs were also present in Area 4 soil samples. Metals concentrations were present above the applicable Standards and Site background in Area 2 and Area 4. OU-2 Post Remediation: Based on sampling conducted by the USEPA, source remediation of Area 2 has been completed in accordance with the cleanup goals presented in the 0U-2 ROD. Approximately 1,046 pounds of VOCs were removed from Area 2 through the operation of the SVE system between January 1997 and November 2000. The SVE system for Area 4 operated from June 2003 and January 2006 and has removed approximately 2,300 pounds of VOCs. Based on a USEPA investigation of Area 4 in November 2005, significant sources of VOCs are still present in the deeper unsaturated and shallow saturated zones in Area 4. Special Resources Impacted/Threatened: Groundwater from Well 1-1A is being pumped and treated prior to being discharged to the Susquehanna River, protecting public health and the environment. Significant Threat: The Site continues to present an environmental threat due to the ongoing releases of contaminants from OU-2 (Area 4) into groundwater.

Site Health Assessment

Due to the presence of chlorinated solvents in groundwater at this public water supply well, an air stripper was installed to remove volatile organic contaminants from drinking water. This treatment system is routinely monitored and is effectively removing contaminants from the public water supply. Additionally, a soil vapor extraction system has been installed to reduce the levels of contaminants impacting the groundwater quality.

For more Information: E-mail Us

Return To Results

Refine This Search

Environmental Remediation Databases

Summary of Project Completion Dates

Site Name: Vestal Water Supply (Site 1-1)
Site Code: 704009A
Program: State Superfund Program
Locality: Vestal
DEC Region: 7

Operable Unit: 03 - Area # 4 Soils

Project Name	Completion Date
Remedial Investigation Amendment	09/30/2016

Citizen Participation is an important part of the Department's efforts to remediate abandoned and inactive hazardous waste disposal sites in New York. Fact sheets have been developed to provide the public with information about the major elements of the State's Superfund program (given in the completion dates above) and to help citizens understand how the program works.

Refine Current Search

Environmental Remediation Databases Details

Facility Information

Site No.: 7-015245
Status: Unregulated/Closed
Expiration Date: 06/25/2008
Site Type: PBS
Site Name: BABSON REALTY LLC
Address: 545 OLD FRONT ST
Locality: BINGHAMTON
State: NY
Zipcode: 13905
County: Broome

Owner(s) Information

Facility Owner: DANIEL R. BABCOCK
140 WASHINGTON AVE. . ENDICOTT, NY. 13760
Mail Contact: BABSON REALTY LLC
140 WASHINGTON AVE. . ENDICOTT , NY. 13760

Tank Information

2 Tanks Found

Tank No	Tank Location	Status	Capacity (Gal.)
001	Underground including vaulted with no access for inspection	Closed - Removed	10000
002	Underground including vaulted with no access for inspection	Closed - Removed	6000

You created this PDF from an application that is not licensed to print to novaPDF printer (http://www.novapdf.com)

Environmental Remediation Databases Details

Facility Information

Site No.: 7-600491
Status: Unregulated/Closed
Expiration Date: 11/30/2016
Site Type: PBS
Site Name: MONRO MUFFLER / BRAKE # 31
Address: 1268 FRONT ST
Locality: BINGHAMTON
State: NY
Zipcode: 13905
County: Broome

Owner(s) Information

Facility Owner: MONRO MUFFLER BRAKE INC
200 HOLLEDER PKWY . ROCHESTER, NY. 14615-3808
Mail Contact: MONRO MUFFLER BRAKE INC
200 HOLLEDER PKWY . ROCHESTER, NY. 14615-3808

Tank Information

1 Tanks Found

Tank No	Tank Location	Status	Capacity (Gal.)
001	Aboveground on saddles, legs, stilts, rack or cradle	Closed - In Place	240

You created this PDF from an application that is not licensed to print to novaPDF printer (http://www.novapdf.com)

Environmental Remediation Databases Details

Facility Information

Site No.: 7-600491
Status: Unregulated/Closed
Expiration Date: 11/30/2016
Site Type: PBS
Site Name: MONRO MUFFLER / BRAKE # 31
Address: 1268 FRONT ST
Locality: BINGHAMTON
State: NY
Zipcode: 13905
County: Broome

Owner(s) Information

Facility Owner: MONRO MUFFLER BRAKE INC
200 HOLLEDER PKWY . ROCHESTER, NY. 14615-3808
Mail Contact: MONRO MUFFLER BRAKE INC
200 HOLLEDER PKWY . ROCHESTER, NY. 14615-3808

Tank Information

1 Tanks Found

Tank No	Tank Location	Status	Capacity (Gal.)
001	Aboveground on saddles, legs, stilts, rack or cradle	Closed - In Place	240

You created this PDF from an application that is not licensed to print to novaPDF printer (http://www.novapdf.com)

Environmental Remediation Databases Details

Facility Information

Site No.: 7-301140
Status: Active
Expiration Date: 11/08/2019
Site Type: PBS
Site Name: EXPRESS MART #320
Address: 704 FRONT ST
Locality: BINGHAMTON
State: NY
Zipcode: 13905
County: Broome

Owner(s) Information

Facility Owner: REROB LLC
7401 ROUND POND ROAD . Syracuse, NY. 13212
Mail Contact: REROB LLC
7401 ROUND POND RD . SYRACUSE, NY. 13212

Tank Information

12 Tanks Found

Tank No	Tank Location	Status	Capacity (Gal.)
001	Underground including vaulted with no access for inspection	Closed Prior to 03/1991	6000
002	Underground including vaulted with no access for inspection	Closed Prior to 03/1991	550
003	Underground including vaulted with no access for inspection	Closed Prior to 03/1991	10000
004	Underground including vaulted with no access for inspection	Closed Prior to 03/1991	10000
006-M1	Underground including vaulted with no access for inspection	In Service	12000
007-S1	Underground including vaulted with no access for inspection	In Service	10000
008	Underground including vaulted with no access for inspection	In Service	10000

You created this PDF from an application that is not licensed to print to novaPDF printer (http://www.novapdf.com)

009	Underground including vaulted with no access for inspection	Closed - Removed	1000
010	Underground including vaulted with no access for inspection	Closed - Removed	550
012	Underground including vaulted with no access for inspection	In Service	6000
11A	Aboveground - in contact with soil	Closed - Removed	2000
11B	Aboveground - in contact with soil	Closed - Removed	2000

You created this PDF from an application that is not licensed to print to novaPDF printer (http://www.novapdf.com)

Environmental Remediation Databases Details

Facility Information

Site No.: 7-122009
Status: Active
Expiration Date: 03/24/2017
Site Type: PBS
Site Name: KWIK-FILL #A0010-024
Address: 1053 FRONT ST
Locality: BINGHAMTON
State: NY
Zipcode: 13905
County: Broome

Owner(s) Information

Facility Owner: UNITED REFINING COMPANY OF PA
PO BOX 688 . WARREN, PA. 16365
Mail Contact: UNITED REFINING COMPANY OF PA
PO BOX 688 . WARREN, PA. 16365

Tank Information

8 Tanks Found

Tank No	Tank Location	Status	Capacity (Gal.)
001	Underground including vaulted with no access for inspection	Closed Prior to 03/1991	10000
002	Underground including vaulted with no access for inspection	Closed Prior to 03/1991	8000
003	Underground including vaulted with no access for inspection	Closed Prior to 03/1991	6000
004	Underground including vaulted with no access for inspection	Closed Prior to 03/1991	6000
005	Underground including vaulted with no access for inspection	Closed Prior to 03/1991	6000
006	Underground including vaulted with no access for inspection	In Service	10000
007	Underground including vaulted with no access for inspection	Closed - In Place	10000

You created this PDF from an application that is not licensed to print to novaPDF printer (http://www.novapdf.com)

008	Underground including vaulted with no access for inspection	Closed - In Place	10000

You created this PDF from an application that is not licensed to print to novaPDF printer (http://www.novapdf.com)

Environmental Remediation Databases Details

Facility Information

Site No.: 7-186600
Status: Unregulated/Closed
Expiration Date: 06/18/1997
Site Type: PBS
Site Name: PETR-ALL CORP. #333
Address: 1130 FRONT ST
Locality: BINGHAMTON
State: NY
Zipcode: 13905
County: Broome

Owner(s) Information

Facility Owner: PETR-ALL CORP.
6567 KINNE RD. BOX 46 . DEWITT , NY. 13212
Mail Contact: PETR-ALL CORP.
6567 KINNE RD. BOX 46 . DEWITT, NY. 13212

Tank Information

3 Tanks Found

Tank No	Tank Location	Status	Capacity (Gal.)
001	Underground including vaulted with no access for inspection	Closed - Removed	10000
002	Underground including vaulted with no access for inspection	Closed - Removed	10000
003	Underground including vaulted with no access for inspection	Closed - Removed	10000

You created this PDF from an application that is not licensed to print to novaPDF printer (http://www.novapdf.com)

Environmental Remediation Databases Details

Facility Information

Site No.: 7-600400
Status: Active
Expiration Date: 01/22/2021
Site Type: PBS
Site Name: VALVOLINE LLC 020007
Address: 1225 FRONT ST
Locality: BINGHAMTON
State: NY
Zipcode: 13901
County: Broome

Owner(s) Information

Facility Owner: DIANA & PETER S BEHLOG
2 COLLEGE VIEW RD . BINGHAMTON, NY. 13905
Mail Contact: VALVOLINE LLC
911 OLD LIVERPOOL RD - SUITE #3 . LIVERPOOL, NY. 13088

Tank Information

13 Tanks Found

Tank No	Tank Location	Status	Capacity (Gal.)
001	Aboveground - in contact with impervious barrier	Closed - Removed	250
002	Aboveground on saddles, legs, stilts, rack or cradle	Closed - Removed	250
003	Aboveground on saddles, legs, stilts, rack or cradle	Closed - Removed	250
004	Aboveground on saddles, legs, stilts, rack or cradle	Closed - Removed	250
005	Aboveground on saddles, legs, stilts, rack or cradle	In Service	275
006	Aboveground on saddles, legs, stilts, rack or cradle	In Service	275
007	Aboveground on saddles, legs, stilts, rack or cradle	In Service	275

You created this PDF from an application that is not licensed to print to novaPDF printer (http://www.novapdf.com)

008	Aboveground on saddles, legs, stilts, rack or cradle	In Service	275
009	Aboveground on saddles, legs, stilts, rack or cradle	In Service	275
010	Aboveground on saddles, legs, stilts, rack or cradle	In Service	275
011	Aboveground on saddles, legs, stilts, rack or cradle	In Service	275
012	Aboveground on saddles, legs, stilts, rack or cradle	In Service	330
013	Aboveground on saddles, legs, stilts, rack or cradle	In Service	330

You created this PDF from an application that is not licensed to print to novaPDF printer (http://www.novapdf.com)

Environmental Remediation Databases Details

Facility Information

Site No.: 7-073024
Status: Active
Expiration Date: 05/19/2019
Site Type: PBS
Site Name: QUICKWAY #36
Address: 1232 FRONT ST
Locality: BINGHAMTON
State: NY
Zipcode: 13905
County: Broome

Owner(s) Information

Facility Owner: MIRABITO HOLDINGS INC
49 COURT ST, THE METROCENTER, PO BOX 5306 . BINGHAMTON, NY. 13902
Mail Contact: MIRABITO FUEL GROUP
49 COURT ST, THE METROCENTER . BINGHAMTON, NY. 13902

Tank Information

8 Tanks Found

Tank No	Tank Location	Status	Capacity (Gal.)
001	Underground including vaulted with no access for inspection	Closed - Removed	12000
002	Underground including vaulted with no access for inspection	Closed - Removed	10000
003	Underground including vaulted with no access for inspection	Closed - Removed	10000
004	Underground including vaulted with no access for inspection	Closed - Removed	8000
5A	Underground including vaulted with no access for inspection	In Service	15000
5B	Underground including vaulted with no access for inspection	In Service	5000
6A	Underground including vaulted with no access for inspection	In Service	10000

You created this PDF from an application that is not licensed to print to novaPDF printer (http://www.novapdf.com)

6B	Underground including vaulted with no access for inspection	In Service	2000

You created this PDF from an application that is not licensed to print to novaPDF printer (http://www.novapdf.com)

Environmental Remediation Databases Details

Facility Information

Site No.: 7-600072
Status: Active
Expiration Date: 09/30/2019
Site Type: PBS
Site Name: SPEEDWAY # 7659
Address: 1245 FRONT ST
Locality: BINGHAMTON
State: NY
Zipcode: 13905
County: Broome

Owner(s) Information

Facility Owner: SPEEDWAY LLC
500 SPEEDWAY DR . ENON, OH. 45323
Mail Contact: SPEEDWAY LLC
500 SPEEDWAY DRIVE . ENON, OH. 45323

Tank Information

4 Tanks Found

Tank No	Tank Location	Status	Capacity (Gal.)
1	Underground including vaulted with no access for inspection	In Service	10000
2	Underground including vaulted with no access for inspection	In Service	10000
3	Underground including vaulted with no access for inspection	Out of Service	10000
4	Underground including vaulted with no access for inspection	In Service	10000

You created this PDF from an application that is not licensed to print to novaPDF printer (http://www.novapdf.com)

Environmental Remediation Databases Details

Facility Information

Site No.: 7-600491
Status: Unregulated/Closed
Expiration Date: 11/30/2016
Site Type: PBS
Site Name: MONRO MUFFLER / BRAKE # 31
Address: 1268 FRONT ST
Locality: BINGHAMTON
State: NY
Zipcode: 13905
County: Broome

Owner(s) Information

Facility Owner: MONRO MUFFLER BRAKE INC
200 HOLLEDER PKWY . ROCHESTER, NY. 14615-3808
Mail Contact: MONRO MUFFLER BRAKE INC
200 HOLLEDER PKWY . ROCHESTER, NY. 14615-3808

Tank Information

1 Tanks Found

Tank No	Tank Location	Status	Capacity (Gal.)
001	Aboveground on saddles, legs, stilts, rack or cradle	Closed - In Place	240

You created this PDF from an application that is not licensed to print to novaPDF printer (http://www.novapdf.com)

Environmental Remediation Databases Details

Facility Information

Site No.: 7-072745
Status: Unregulated/Closed
Expiration Date: 03/24/1992
Site Type: PBS
Site Name: VESTAL SENIOR HIGH SCHOOL
Address: WOODLAWN DR
Locality: VESTAL
State: NY
Zipcode: 13850
County: Broome

Owner(s) Information

Facility Owner: VESTAL CENTRAL SCHOOLS
201 MAIN ST . VESTAL , NY. 13850
Mail Contact: VESTAL CENTRAL SCHOOLS
201 MAIN ST . VESTAL , NY. 13850

Tank Information

1 Tanks Found

Tank No	Tank Location	Status	Capacity (Gal.)
001	Underground including vaulted with no access for inspection	Closed - Removed	2000

You created this PDF from an application that is not licensed to print to novaPDF printer (http://www.novapdf.com)

Environmental Remediation Databases Details

Facility Information

Site No.: 7-434973
Status: Active
Expiration Date: 01/12/2021
Site Type: PBS
Site Name: QUICK CHECK MINI-MART INC
Address: 225 MAIN ST
Locality: WINDSOR
State: NY
Zipcode: 13865
County: Broome

Owner(s) Information

Facility Owner: CHETNABEN PATEL
225 MAIN ST . WINDSOR, NY. 13865
Mail Contact: QUICK CHECK MINI-MART INC
225 MAIN ST . WINDSOR, NY. 13865

Tank Information

8 Tanks Found

Tank No	Tank Location	Status	Capacity (Gal.)
001	Underground including vaulted with no access for inspection	Closed - Removed	4000
002	Underground including vaulted with no access for inspection	Closed - Removed	8000
003	Underground including vaulted with no access for inspection	Closed - Removed	6000
004	Aboveground on saddles, legs, stilts, rack or cradle	In Service	275
005	Aboveground on saddles, legs, stilts, rack or cradle	In Service	275
006A	Underground including vaulted with no access for inspection	In Service	8000
006B	Underground including vaulted with no access for inspection	In Service	4000

You created this PDF from an application that is not licensed to print to novaPDF printer (http://www.novapdf.com)

007	Aboveground - in contact with impervious barrier	In Service	1000

You created this PDF from an application that is not licensed to print to novaPDF printer (http://www.novapdf.com)

Environmental Remediation Databases Details

Facility Information

Site No.: 7-127701
Status: Active
Expiration Date: 03/24/2017
Site Type: PBS
Site Name: WINDSOR CENTRAL SCHOOL DISTRICT
Address: 206 MAIN ST BUS GARAGE
Locality: WINDSOR
State: NY
Zipcode: 13865
County: Broome

Owner(s) Information

Facility Owner: WINDSOR CENTRAL SCHOOL DISTRICT
215 MAIN ST . WINDSOR, NY. 13865
Mail Contact: WINDSOR CENTRAL SCHOOLS
215 MAIN ST . WINDSOR, NY. 13865

Tank Information

5 Tanks Found

Tank No	Tank Location	Status	Capacity (Gal.)
001	Underground including vaulted with no access for inspection	Closed - Removed	4000
002	Underground including vaulted with no access for inspection	Closed Prior to 03/1991	10000
003	Underground including vaulted with no access for inspection	Closed Prior to 03/1991	2000
004	Aboveground on saddles, legs, stilts, rack or cradle	In Service	10000
005	Aboveground - in contact with soil	Closed - Removed	250

You created this PDF from an application that is not licensed to print to novaPDF printer (http://www.novapdf.com)

Environmental Remediation Databases Details

Facility Information

Site No.: 7-600890
Status: Active
Expiration Date: 06/12/2017
Site Type: PBS
Site Name: FIRESTONE COMPLETE AUTO CARE # 0927
Address: 111 VESTAL PARKWAY EAST
Locality: VESTAL
State: NY
Zipcode: 13850
County: Broome

Owner(s) Information

Facility Owner: BRIDGESTONE RETAIL OPERATIONS LLC
333 EAST LAKE ST . BLOOMINGDALE, IL. 60108
Mail Contact: BRIDGESTONE RETAIL OPERATIONS LLC
333 EAST LAKE ST . BLOOMINGDALE, IL. 60108

Tank Information

1 Tanks Found

Tank No	Tank Location	Status	Capacity (Gal.)
1	Aboveground on saddles, legs, stilts, rack or cradle	In Service	275

You created this PDF from an application that is not licensed to print to novaPDF printer (http://www.novapdf.com)

Environmental Remediation Databases Details

Facility Information

Site No.: 7-499757
Status: Unregulated/Closed
Expiration Date: 09/29/2021
Site Type: PBS
Site Name: CASTROL PREMIUM LUBE EXPRESS
Address: 137 VESTAL PARKWAY EAST
Locality: VESTAL
State: NY
Zipcode: 13850
County: Broome

Owner(s) Information

Facility Owner: JOANNCO ASSOCIATES
152 EAST HAMILTON RD . BINGHAMTON, NY. 13903
Mail Contact: JOANNCO ASSOCIATES
152 EAST HAMILTON RD . BINGHAMTON, NY. 13903

Tank Information

13 Tanks Found

Tank No	Tank Location	Status	Capacity (Gal.)
001	Underground including vaulted with no access for inspection	Closed - Removed	1000
001	Aboveground on saddles, legs, stilts, rack or cradle	Closed - Removed	275
002	Underground including vaulted with no access for inspection	Closed - Removed	2000
002	Aboveground on saddles, legs, stilts, rack or cradle	Closed - Removed	650
003	Underground including vaulted with no access for inspection	Closed - Removed	3000
003	Aboveground on saddles, legs, stilts, rack or cradle	Closed - Removed	650
004	Aboveground on saddles, legs, stilts, rack or cradle	Closed - Removed	650

You created this PDF from an application that is not licensed to print to novaPDF printer (http://www.novapdf.com)

005	Aboveground on saddles, legs, stilts, rack or cradle	Closed - Removed	275
006	Aboveground on saddles, legs, stilts, rack or cradle	Closed - Removed	275
007	Aboveground on saddles, legs, stilts, rack or cradle	Closed - Removed	300
008	Aboveground on saddles, legs, stilts, rack or cradle	Closed - Removed	300
009	Aboveground on saddles, legs, stilts, rack or cradle	Closed - Removed	300
010	Aboveground on saddles, legs, stilts, rack or cradle	Administratively Closed	1000

You created this PDF from an application that is not licensed to print to novaPDF printer (http://www.novapdf.com)

Environmental Remediation Databases Details

Facility Information

Site No.: 7-600401
Status: Active
Expiration Date: 08/18/2021
Site Type: PBS
Site Name: VALVOLINE LLC 020008
Address: 100 VESTAL PARKWAY
Locality: VESTAL
State: NY
Zipcode: 13850
County: Broome

Owner(s) Information

Facility Owner: VALVOLINE LLC
3499 BLAZER PKWY . LEXINGTON, KY. 40509
Mail Contact: VALVOLINE LLC
911 OLD LIVERPOOL RD - SUITE #3 . LIVERPOOL, NY. 13088

Tank Information

13 Tanks Found

Tank No	Tank Location	Status	Capacity (Gal.)
001	Aboveground on saddles, legs, stilts, rack or cradle	Closed - Removed	250
002	Aboveground on saddles, legs, stilts, rack or cradle	Closed - Removed	250
003	Aboveground - in contact with impervious barrier	In Service	255
004	Aboveground - in contact with impervious barrier	In Service	255
005	Aboveground on saddles, legs, stilts, rack or cradle	In Service	275
006	Aboveground on saddles, legs, stilts, rack or cradle	In Service	275
007	Aboveground on saddles, legs, stilts, rack or cradle	In Service	275

You created this PDF from an application that is not licensed to print to novaPDF printer (http://www.novapdf.com)

008	Aboveground on saddles, legs, stilts, rack or cradle	In Service	275
009	Aboveground on saddles, legs, stilts, rack or cradle	In Service	275
01	Aboveground - in contact with impervious barrier	Closed - Removed	250
010	Aboveground on saddles, legs, stilts, rack or cradle	In Service	275
011	Aboveground on saddles, legs, stilts, rack or cradle	In Service	275
02	Aboveground - in contact with impervious barrier	Closed - Removed	250

You created this PDF from an application that is not licensed to print to novaPDF printer (http://www.novapdf.com)

Environmental Remediation Databases Details

Facility Information

Site No.: 7-601019
Status: Inactive
Expiration Date: 04/20/2010
Site Type: PBS
Site Name: COLE MUFFLER INC
Address: 108 NORTH MAIN ST
Locality: VESTAL
State: NY
Zipcode: 13850
County: Broome

Owner(s) Information

Facility Owner: DONALD E. COLE
103 KUHN RD . SYRACUSE, NY. 13208
Mail Contact: COLE MUFFLER INC
103 KUHN RD . SYRACUSE, NY. 13208

Tank Information

5 Tanks Found

Tank No	Tank Location	Status	Capacity (Gal.)
001	Aboveground on saddles, legs, stilts, rack or cradle	Tank Converted to Non-Regulated use	220
002	Aboveground on saddles, legs, stilts, rack or cradle	Tank Converted to Non-Regulated use	55
003	Aboveground on saddles, legs, stilts, rack or cradle	Tank Converted to Non-Regulated use	55
004	Aboveground on saddles, legs, stilts, rack or cradle	Tank Converted to Non-Regulated use	55
005	Aboveground on saddles, legs, stilts, rack or cradle	Tank Converted to Non-Regulated use	55

You created this PDF from an application that is not licensed to print to novaPDF printer (http://www.novapdf.com)

Environmental Remediation Databases Details

Facility Information

Site No.: 7-601330
Status: Active
Expiration Date: 04/26/2020
Site Type: PBS
Site Name: MAVIS TIRE SUPPLY LLC
Address: 108 NORTH MAIN ST
Locality: VESTAL
State: NY
Zipcode: 13850
County: Broome

Owner(s) Information

Facility Owner: WILLIAM DAVENDORF
1664 CHANNELSIDE TRL . BALDWINSVILLE, NY. 13027
Mail Contact: MAVIS DISCOUNT TIRE
358 SAW MILL RIVER RD . MILLWOOD, NY. 10546

Tank Information

2 Tanks Found

Tank No	Tank Location	Status	Capacity (Gal.)
001	Aboveground on saddles, legs, stilts, rack or cradle	In Service	275
002	Aboveground on saddles, legs, stilts, rack or cradle	In Service	275

You created this PDF from an application that is not licensed to print to novaPDF printer (http://www.novapdf.com)

Attachment 6

Section 7 Documents:
USFWS Acknowledgement
NHP Responses
USFWS Letters
Official Species List
Trust Resources List

United States Department of the Interior

FISH AND WILDLIFE SERVICE
New York Field Office
3817 Luker Road
Cortland, NY 13045
Phone: (607) 753-9334 Fax: (607) 753-9699
http://www.fws.gov/northeast/nyfo

To: Thomas King Date: Feb 23, 2015

USFWS File No: 150411

Regarding your: x Letter ___Fax ___Email Dated: Feb 4, 2015

For project: Robert Street stormwater pump station upgrade

Located: _____

In Town/County: Town of Vestal / Broome County

Pursuant to the Endangered Species Act of 1973 (ESA) (87 Stat. 884, as amended; 16 U.S.C. 1531 *et seq.*), the U.S. Fish and Wildlife Service:

→ X Acknowledges receipt of your "no effect" and/or no impact determination. No further ESA coordination or consultation is required.

~~X~~ Acknowledges receipt of your determination. Please provide a copy of your determination and supporting materials to any involved Federal agency for their final ESA determination.

___ Is taking no action pursuant to ESA or any legislation at this time, but would like to be kept informed of project developments.

As a reminder, until the proposed project is complete, we recommend that you check our website (http://www.fws.gov/northeast/nyfo/es/section7.htm) every 90 days from the date of this letter to ensure that listed species presence/absence information for the proposed project is current. Should project plans change or if additional information on listed or proposed species or critical habitat becomes available, this determination may be reconsidered.

USFWS Contact(s): Bobayrd

Supervisor: Patricia Cole Date: 2/23/15

NEW YORK STATE DEPARTMENT OF ENVIRONMENTAL CONSERVATION
Division of Fish, Wildlife & Marine Resources
New York Natural Heritage Program
625 Broadway, 5th Floor, Albany, New York 12233-4757
Phone: (518) 402-8935 • **Fax:** (518) 402-8925
Website: www.dec.ny.gov

Joe Martens
Commissioner

February 19, 2015

Joshua Gomez
Tectonic
PO Box 37, 70 Pleasant Hill Road
Mountainville, NY 10953

Re: Robert Street Stormwater Pump Station Upgrade (W.O. #7463.03)
Town/City: Vestal. County: Broome.

Dear Joshua Gomez :

In response to your recent request, we have reviewed the New York Natural Heritage Program database with respect to the above project.

Enclosed is a report of rare or state-listed animals and plants, and significant natural communities, that our database indicates occur, or may occur, on your site or in the immediate vicinity of your site.

For most sites, comprehensive field surveys have not been conducted; the enclosed report only includes records from our database. We cannot provide a definitive statement as to the presence or absence of all rare or state-listed species or significant natural communities. Depending on the nature of the project and the conditions at the project site, further information from on-site surveys or other sources may be required to fully assess impacts on biological resources.

Our database is continually growing as records are added and updated. If this proposed project is still under development one year from now, we recommend that you contact us again so that we may update this response with the most current information.

The presence of the plants and animals identified in the enclosed report may result in this project requiring additional review or permit conditions. For further guidance, and for information regarding other permits that may be required under state law for regulated areas or activities (e.g., regulated wetlands), please contact the appropriate NYS DEC Regional Office, Division of Environmental Permits, as listed at www.dec.ny.gov/about/39381.html.

Sincerely,

Andrea Chaloux

Andrea Chaloux
Environmental Review Specialist
New York Natural Heritage Program

The following state-listed animals have been documented in the vicinity of your project site.

The following list includes animals that are listed by NYS as Endangered, Threatened, or Special Concern; and/or that are federally listed or are candidates for federal listing.

For information about potential impacts of your project on these populations, how to avoid, minimize, or mitigate any impacts, and any permit considerations, contact the Wildlife Manager or the Fisheries Manager at the NYSDEC Regional Office for the region where the project is located. A listing of Regional Offices is at http://www.dec.ny.gov/about/558.html.

The following species have been documented near your project site, generally within 0.5 mile. Potential onsite and offsite impacts from the project may need to be addressed.

COMMON NAME	*SCIENTIFIC NAME*	*NY STATE LISTING*	*FEDERAL LISTING*	
Amphibians				
Hellbender	*Cryptobranchus alleganiensis*	Special Concern		12100

This report only includes records from the NY Natural Heritage database. For most sites, comprehensive field surveys have not been conducted, and we cannot provide a definitive statement as to the presence or absence of all rare or state-listed species. Depending on the nature of the project and the conditions at the project site, further information from on-site surveys or other sources may be required to fully assess impacts on biological resources.

If any rare plants or animals are documented during site visits, we request that information on the observations be provided to the New York Natural Heritage Program so that we may update our database.

Information about many of the listed animals in New York, including habitat, biology, identification, conservation, and management, are available online in Natural Heritage's Conservation Guides at www.guides.nynhp.org, and from NYSDEC at www.dec.ny.gov/animals/7494.html.

The following rare plants, rare animals, and significant natural communities have been documented in the vicinity of your project site.

We recommend that potential onsite and offsite impacts of the proposed project on these species or communities be addressed as part of any environmental assessment or review conducted as part of the planning, permitting and approval process, such as reviews conducted under SEQR. Field surveys of the project site may be necessary to determine the status of a species at the site, particularly for sites that are currently undeveloped and may still contain suitable habitat. Final requirements of the project to avoid, minimize, or mitigate potential impacts are determined by the lead permitting agency or the government body approving the project.

The following animals, while not listed by New York State as Endangered or Threatened, are of conservation concern to the state, and are considered rare by the New York Natural Heritage Program.

COMMON NAME	*SCIENTIFIC NAME*	*NY STATE LISTING*	*HERITAGE CONSERVATION STATUS*
Freshwater Mussels			
Yellow Lampmussel	*Lampsilis cariosa*	Unlisted	Vulnerable in NYS
Susquehanna River Endicott, 2008-pre:			13375

This report only includes records from the NY Natural Heritage database. For most sites, comprehensive field surveys have not been conducted, and we cannot provide a definitive statement as to the presence or absence of all rare or state-listed species. Depending on the nature of the project and the conditions at the project site, further information from on-site surveys or other sources may be required to fully assess impacts on biological resources.

If any rare plants or animals are documented during site visits, we request that information on the observations be provided to the New York Natural Heritage Program so that we may update our database.

Information about many of the rare animals and plants in New York, including habitat, biology, identification, conservation, and management, are available online in Natural Heritage's Conservation Guides at www.guides.nynhp.org, from NatureServe Explorer at www.natureserve.org/explorer, and from USDA's Plants Database at http://plants.usda.gov/index.html (for plants).

Information about many of the natural community types in New York, including identification, dominant and characteristic vegetation, distribution, conservation, and management, is available online in Natural Heritage's Conservation Guides at www.guides.nynhp.org. For descriptions of all community types, go to www.dec.ny.gov/animals/97703.html for Ecological Communities of New York State.

NEW YORK STATE DEPARTMENT OF ENVIRONMENTAL CONSERVATION
Division of Fish, Wildlife & Marine Resources
New York Natural Heritage Program
625 Broadway, 5th Floor, Albany, New York 12233-4757
Phone: (518) 402-8935 • **Fax:** (518) 402-8925
Website: www.dec.ny.gov

September 02, 2016

Chris Camacho
Tectonic Engineering
70 Pleasant Hill Road
Mountainville, NY 10953

Re: Robert Street Stormwater Pump Station Upgrade
Town/City: Vestal County: Broome

Dear Chris Camacho:

In response to your recent request, we have reviewed the New York Natural Heritage Program database with respect to the above project.

Enclosed is a report of rare or state-listed animals and plants, and significant natural communities that our database indicates occur, or may occur, on your site or in the immediate vicinity of your site.

For most sites, comprehensive field surveys have not been conducted; the enclosed report only includes records from our database. We cannot provide a definitive statement as to the presence or absence of all rare or state-listed species or significant natural communities. Depending on the nature of the project and the conditions at the project site, further information from on-site surveys or other sources may be required to fully assess impacts on biological resources.

Our database is continually growing as records are added and updated. If this proposed project is still under development one year from now, we recommend that you contact us again so that we may update this response with the most current information.

The presence of the plants and animals identified in the enclosed report may result in this project requiring additional review or permit conditions. For further guidance, and for information regarding other permits that may be required under state law for regulated areas or activities (e.g., regulated wetlands), please contact the appropriate NYS DEC Regional Office, Division of Environmental Permits, as listed at www.dec.ny.gov/about/39381.html.

Sincerely,

Andrea Chaloux

Andrea Chaloux
Environmental Review Specialist
New York Natural Heritage Program

1003

The following state-listed animals have been documented in the vicinity of your project site.

The following list includes animals that are listed by NYS as Endangered, Threatened, or Special Concern; and/or that are federally listed or are candidates for federal listing.

For information about any permit considerations for your project, contact the Permits staff at the NYSDEC Region 7 Office. For information about potential impacts of your project on these species, and how to avoid, minimize, or mitigate any impacts, contact the Wildlife Manager.

A listing of Regional Offices is at http://www.dec.ny.gov/about/558.html.

The following species have been documented near the project site, within 0.5 mile.

COMMON NAME	*SCIENTIFIC NAME*	*NY STATE LISTING*	*FEDERAL LISTING*	
Amphibians				
Hellbender	*Cryptobranchus alleganiensis*	Special Concern		12100

This report only includes records from the NY Natural Heritage database. For most sites, comprehensive field surveys have not been conducted, and we cannot provide a definitive statement as to the presence or absence of all rare or state-listed species. Depending on the nature of the project and the conditions at the project site, further information from on-site surveys or other sources may be required to fully assess impacts on biological resources.

If any rare plants or animals are documented during site visits, we request that information on the observations be provided to the New York Natural Heritage Program so that we may update our database.

Information about many of the listed animals in New York, including habitat, biology, identification, conservation, and management, are available online in Natural Heritage's Conservation Guides at www.guides.nynhp.org, and from NYSDEC at www.dec.ny.gov/animals/7494.html.

The following rare plants, rare animals, and significant natural communities have been documented in the vicinity of your project site.

We recommend that potential onsite and offsite impacts of the proposed project on these species or communities be addressed as part of any environmental assessment or review conducted as part of the planning, permitting and approval process, such as reviews conducted under SEQR. Field surveys of the project site may be necessary to determine the status of a species at the site, particularly for sites that are currently undeveloped and may still contain suitable habitat. Final requirements of the project to avoid, minimize, or mitigate potential impacts are determined by the lead permitting agency or the government body approving the project.

The following animals, while not listed by New York State as Endangered or Threatened, are of conservation concern to the state, and are considered rare by the New York Natural Heritage Program.

COMMON NAME	*SCIENTIFIC NAME*	*NY STATE LISTING*	*HERITAGE CONSERVATION STATUS*
Freshwater Mussels			
Yellow Lampmussel	*Lampsilis cariosa*	Unlisted	Vulnerable in NYS
Susquehanna River Endicott, 2008-pre.			13375

This report only includes records from the NY Natural Heritage database. For most sites, comprehensive field surveys have not been conducted, and we cannot provide a definitive statement as to the presence or absence of all rare or state-listed species. Depending on the nature of the project and the conditions at the project site, further information from on-site surveys or other sources may be required to fully assess impacts on biological resources.

If any rare plants or animals are documented during site visits, we request that information on the observations be provided to the New York Natural Heritage Program so that we may update our database.

Information about many of the rare animals and plants in New York, including habitat, biology, identification, conservation, and management, are available online in Natural Heritage's Conservation Guides at www.guides.nynhp.org, from NatureServe Explorer at www.natureserve.org/explorer, and from USDA's Plants Database at http://plants.usda.gov/index.html (for plants).

Information about many of the natural community types in New York, including identification, dominant and characteristic vegetation, distribution, conservation, and management, is available online in Natural Heritage's Conservation Guides at www.guides.nynhp.org. For descriptions of all community types, go to www.dec.ny.gov/animals/97703.html for Ecological Communities of New York State.

February 4, 2015

Patricia Cole
Fish and Wildlife Service- New York Field Office
3817 Luker Road
Cortland, NY 13045

VIA EMAIL: FW5ES_NYFO@fws.gov

Re: Online Project Review Request, Robert Street Stormwater Pump Station Upgrade, Town of Vestal, Broome County, New York

Dear Ms. Cole:

The Governor's Office of Storm Recovery (GOSR), operating under the auspices of the New York Homes and Community Renewal's (NYSHCR) Housing Trust Fund Corporation, was established to aid the statewide recovery of disaster-affected communities in New York State. GOSR is administering a U.S. Department of Housing and Urban Development (HUD) Community Development Block Grant for Disaster Recovery (CDBG-DR), including the New York Rising Community Reconstruction (NYRCR) Program. This letter requests consultation with the U.S. Fish and Wildlife Service (USFWS) pursuant to section 7 of the Endangered Species Act (ESA) of 1973 (87 Stat. 884, as amended; 16 U.S.C. 1531 *et seq*.), the Bald and Golden Eagle Protection Act (BGEPA) (16 U.S.C. 668-668d), and the Migratory Bird Treaty Act (MBTA) (16 U.S.C. 703-712; Ch. 128; July 13, 1918; 40 Stat 755) for a single project proposed to receive CDBG-DR assistance. The environmental review for projects funded under the NYRCR Program are processed on a case-by-case basis in accordance with the USFWS New York Field Office's online project review process.

We have reviewed the referenced project using the New York Field Office's online project review process and have followed all guidance and instructions in completing the review. We completed our review on 1/28/2015 and are submitting our project review package in accordance with the instructions to request review and documentation that the USFWS agrees the project will have "no effect" on endangered/threatened species or on critical habitat.

Due to the damage caused by flooding and erosion as a result of Tropical Storm Lee and Hurricane Irene, the Town of Vestal has applied to GOSR under the NYRCR Program to fund the proposed action. The proposed action is the conversion of a defunct sanitary pump house to a stormwater pump house in order to reduce flood risk to the surrounding neighborhood. The converted pump house will pump ponding stormwater in the adjacent swale over a levee into Choconut Creek during storm events. This will prevent stormwater from flooding the surrounding neighborhood.

The location of the project is 549 Vestal Parkway, Town of Vestal, Broome County, NY. The location and the action area are identified on the enclosed USGS topographic map, street map, and aerial map.

Construction activities will include work within the existing pump house to upgrade the pumps. Existing piping from the pump house to Choconut Creek may be used for this project. However, whether these pipes are serviceable is not known at this juncture. Given the age of the piping, it is expected new piping will have to be constructed in place of the old pipe. In this case, the construction will include two new pipes installed in a westerly direction from the pump house over a levee and into the adjacent Choconut Creek. The piping will be supported so that the section running across the stormwater swale is above ground. The pipe sections installed on the levee will be installed on washed gravel bedding and will be filled over and seeded. The two pipes, which will be installed adjacent to each other, will be approximately 225 feet in length each, and the diameter of the pipes will be up to 36 inches.

The project will involve the removal of 6-8 white pine trees and arborvitae in the area where ground disturbance will occur. A review of photos of the site, the trees, and the surrounding area indicates no summer/ roosting habitat for the northern long eared bat (i.e. there is not sloughing of bark or open cavities/ crevices). Photos of the trees are included in the enclosures of this project review request. Further, given the low number of trees to be removed and the general area surrounding the building to be residential/open space, impacts to the northern long eared bat are not expected based on project scope. If a response from the NYNHP indicates that the northern long-eared bat or bald eagle nesting locations are present in the vicinity of the project area, an endangered species survey and subsequent consultation with the USFWS, NHP, and DEC will be completed before any work commences.

The enclosed project review package provides the information about the species, critical habitat, and bald eagles considered in our review, and the species conclusions table included in the package identifies our determinations for the resources that may be affected by the project. This project is still awaiting response from the NYNHP. If a response from the NYNHP indicates that the northern long-eared bat or bald eagle nesting locations are present in the vicinity of the project area, an endangered species survey and subsequent consultation with the USFWS, NHP, and DEC will be completed before any work commences.

For additional information, please contact me by email at *Thomas.King@stormrecovery.ny.gov* or by telephone at (646) 417-4660.

Sincerely,

Thomas J. King
Assistant General Counsel

Enclosures:

1) Species Conclusion Table
2) Aerial, Topographic, and Street maps
3) Trust Resource List for project area
4) Photos of Project Area
5) Northern long-eared bat fact sheet

Species Conclusions Table

Project Name: Robert Street Stormwater Pump Station Upgrade

Date: 1/28/2015

Species Name/Critical Habitat	Potential Habitat Present?	Species Present?	Critical Habitat Present?	ESA / Eagle Act Determination	Notes / Documentation Summary (include full rationale in your report)
Northern long-eared Bat (Myotis septentrionalis)	No	Awaiting response from NYNHP. We do not anticipate the presence of this species because suitable habitat is not identified at the project location.	No	No effects are Not anticipated. Pending response from NYNHP.	The project area is not in a critical habitat. According to USFWS documentation, the northern long-eared bat roosts underneath tree bark, in cavities, and in the crevices of dead and live trees. The project will involve the removal of 6-8 white pine trees and arborvitae in the area where ground disturbance will occur. A review of photos of the site, the trees, and the surrounding area indicates no summer/ roosting habitat for the northern long eared bat (i.e. there is not sloughing of bark or open cavities/ crevices). Further, given the low number of trees to be removed and the general area surrounding the building to be residential/open space, impacts to the northern long eared bat are not expected based on project scope. If a response from the NYNHP indicates that the northern long-eared bat or bald eagle nesting locations are present in the vicinity of the project area, an endangered species survey and subsequent consultation with the USFWS, NHP, and DEC will be completed before any work commences.

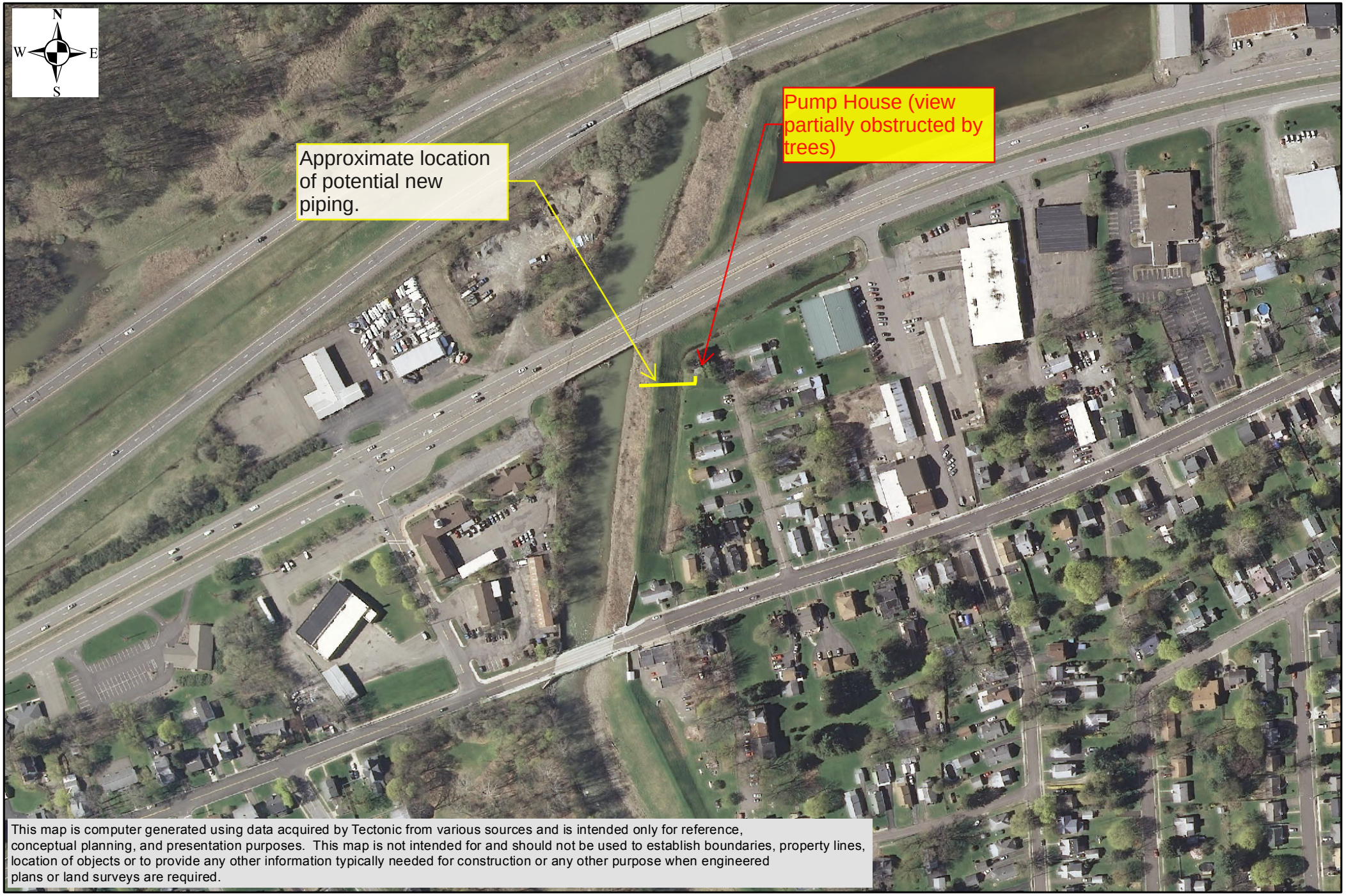

This map is computer generated using data acquired by Tectonic from various sources and is intended only for reference, conceptual planning, and presentation purposes. This map is not intended for and should not be used to establish boundaries, property lines, location of objects or to provide any other information typically needed for construction or any other purpose when engineered plans or land surveys are required.

TECTONIC

Practical Solutions, Exceptional Service

TECTONIC
70 Pleasant Hill Road,
Mountainville, N.Y. 10953
845.534.5959 voice 845.534-5999 fax
www.tectonicengineering.com

Aerial Image
Robert Street Stormwater Pump Station Upgrade
Town of Vestal, NY

0 125 250 500 Feet

Map Created 1/12/2015 by JG

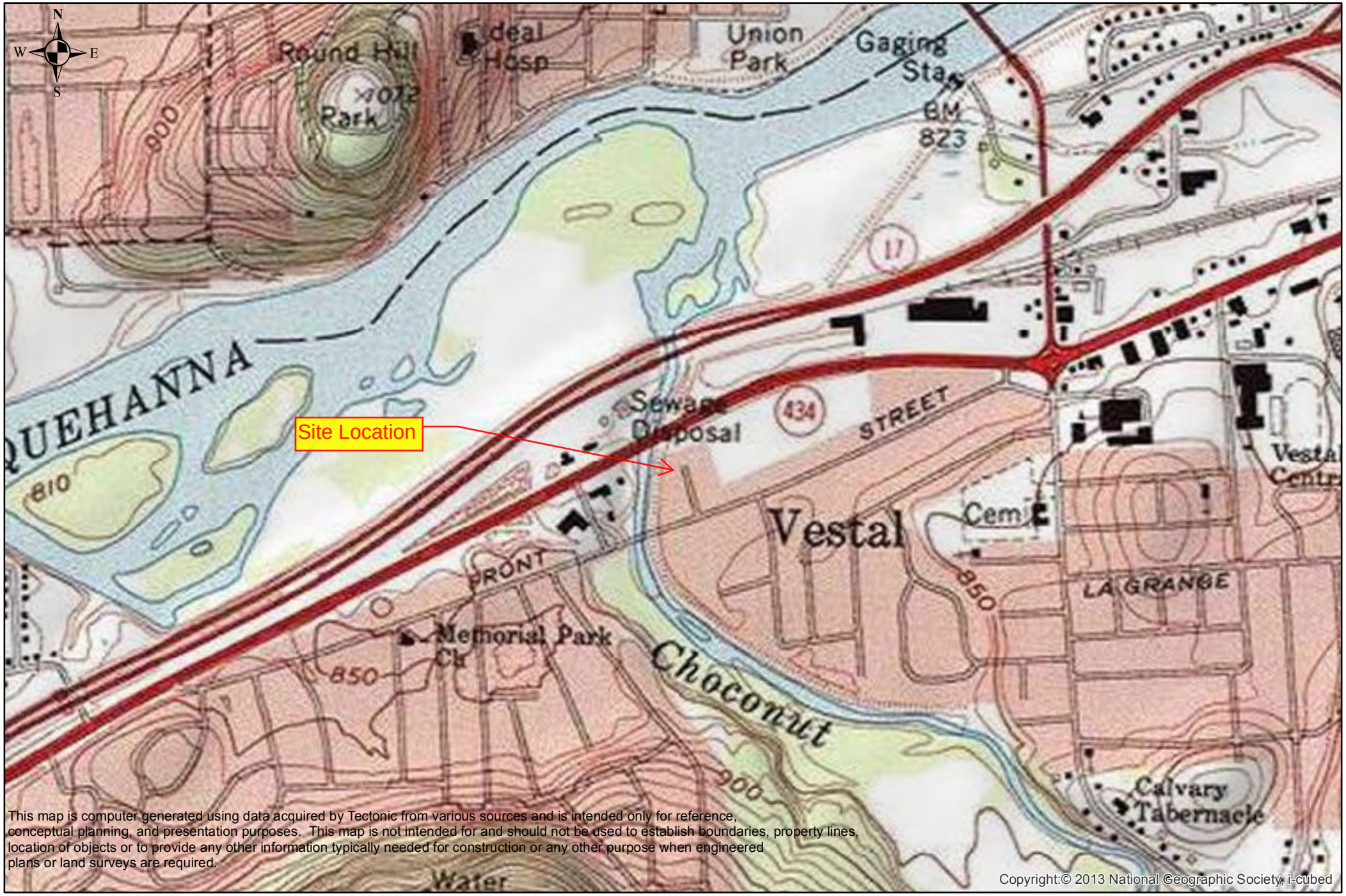

This map is computer generated using data acquired by Tectonic from various sources and is intended only for reference, conceptual planning, and presentation purposes. This map is not intended for and should not be used to establish boundaries, property lines, location of objects or to provide any other information typically needed for construction or any other purpose when engineered plans or land surveys are required.

Copyright:© 2013 National Geographic Society, i-cubed

TECTONIC

Practical Solutions, Exceptional Service

TECTONIC
70 Pleasant Hill Road,
Mountainville, N.Y. 10953
845.534.5959 voice 845.534-5999 fax
www.tectonicengineering.com

0 0.1 0.2 0.4 Miles

Topographic Map
Robert Street Stormwater Pump Station Upgrade
Town of Vestal, NY

This map is computer generated using data acquired by Tectonic from various sources and is intended only for reference, conceptual planning, and presentation purposes. This map is not intended for and should not be used to establish boundaries, property lines, location of objects or to provide any other information typically needed for construction or any other purpose when engineered plans or land surveys are required.

Sources: Esri, HERE, DeLorme, USGS, Intermap, increment P Corp., NRCAN, Esri Japan, METI, Esri China (Hong Kong), Esri (Thailand), TomTom, MapmyIndia, © OpenStreetMap contributors, and the GIS User Community

TECTONIC

Practical Solutions, Exceptional Service

TECTONIC
70 Pleasant Hill Road,
Mountainville, N.Y. 10953
845.534.5959 voice 845.534-5999 fax
www.tectonicengineering.com

0 0.1 0.2 0.4 Miles

Street Map
Robert Street Stormwater Pump Station Upgrade
Town of Vestal, NY

U.S. Fish and Wildlife Service

Trust Resources List

This resource list is to be used for planning purposes only — it is not an official species list.

Endangered Species Act species list information for your project is available online and listed below for the following FWS Field Offices:

New York Ecological Services Field Office
3817 LUKER ROAD
CORTLAND, NY 13045
(607) 753-9334
http://www.fws.gov/northeast/nyfo/es/section7.htm

Project Name:

Vestal- Robert Street Pump Station

U.S. Fish and Wildlife Service

Trust Resources List

Project Location Map:

Project Counties:

Broome, NY

Geographic coordinates (Open Geospatial Consortium Well-Known Text, NAD83):

MULTIPOLYGON (((-76.0636053 42.0835328, -76.0636482 42.0838597, -76.0627368 42.0841463, -76.0627153 42.0838433, -76.0636053 42.0835328)))

Project Type:

** Other **

U.S. Fish and Wildlife Service

Trust Resources List

Endangered Species Act Species List (USFWS Endangered Species Program).

There are a total of **1** threatened or endangered species on your species list. Species on this list should be considered in an effects analysis for your project and could include species that exist in another geographic area. For example, certain fishes may appear on the species list because a project could cause downstream effects on the species. Critical habitats listed under the **Has Critical Habitat** column may or may not lie within your project area. See the **Critical habitats within your project area** section below for critical habitat that lies within your project area. Please contact the designated FWS office if you have questions.

Species that should be considered in an effects analysis for your project:

Mammals	Status		Has Critical Habitat	Contact
northern long-eared Bat (*Myotis septentrionalis*) Population:	Proposed Endangered	species info		New York Ecological Services Field Office

Critical habitats within your project area:

There are no critical habitats within your project area.

FWS National Wildlife Refuges (USFWS National Wildlife Refuges Program).

There are no refuges found within the vicinity of your project.

FWS Migratory Birds (USFWS Migratory Bird Program).

The protection of birds is regulated by the Migratory Bird Treaty Act (MBTA) and the Bald and Golden Eagle Protection Act (BGEPA). Any activity, intentional or unintentional, resulting in take of migratory birds, including eagles, is prohibited unless otherwise permitted by the U.S. Fish and Wildlife Service (50 C.F.R. Sec. 10.12 and 16 U.S.C. Sec. 668(a)). The MBTA has no provision for allowing take of migratory birds that may be unintentionally killed or injured by otherwise lawful activities. For more information regarding these Acts see: http://www.fws.gov/migratorybirds/RegulationsandPolicies.html.

All project proponents are responsible for complying with the appropriate regulations protecting birds when planning and developing a project. To meet these conservation obligations, proponents should identify potential or existing project-related impacts to migratory birds and their habitat and develop and implement conservation measures that avoid, minimize, or compensate for these impacts. The Service's Birds of Conservation Concern (2008) report identifies species, subspecies, and populations of all migratory nongame birds that, without

additional conservation actions, are likely to become listed under the Endangered Species Act as amended (16 U.S.C 1531 et seq.).

For information about Birds of Conservation Concern, go to: http://www.fws.gov/migratorybirds/CurrentBirdIssues/Management/BCC.html.

To search and view summaries of year-round bird occurrence data within your project area, go to the Avian Knowledge Network Histogram Tool links in the Bird Conservation Tools section at: http://www.fws.gov/migratorybirds/CCMB2.htm.

For information about conservation measures that help avoid or minimize impacts to birds, please visit: http://www.fws.gov/migratorybirds/CCMB2.htm.

Migratory birds of concern that may be affected by your project:
There are **15** birds on your Migratory birds of concern list. The underlying data layers used to generate the migratory bird list of concern will continue to be updated regularly as new and better information is obtained. User feedback is one method of identifying any needed improvements. Therefore, users are encouraged to submit comments about any questions regarding species ranges (e.g., a bird on the USFWS BCC list you know does not occur in the specified location appears on the list, or a BCC species that you know does occur there is not appearing on the list). Comments should be sent to the ECOS Help Desk.

Species Name	Bird of Conservation Concern (BCC)	Species Profile	Seasonal Occurrence in Project Area
American bittern (*Botaurus lentiginosus*)	Yes	species info	Breeding
Bald eagle (*Haliaeetus leucocephalus*)	Yes	species info	Year-round
Black-billed Cuckoo (*Coccyzus erythropthalmus*)	Yes	species info	Breeding
Blue-winged Warbler (*Vermivora pinus*)	Yes	species info	Breeding
Canada Warbler (*Wilsonia canadensis*)	Yes	species info	Breeding
Golden-Winged Warbler (*Vermivora chrysoptera*)	Yes	species info	Breeding
Kentucky Warbler (*Oporornis formosus*)	Yes	species info	Breeding
Least Bittern (*Ixobrychus exilis*)	Yes	species info	Breeding

Louisiana Waterthrush (*Parkesia motacilla*)	Yes	species info	Breeding
Pied-billed Grebe (*Podilymbus podiceps*)	Yes	species info	Breeding
Prairie Warbler (*Dendroica discolor*)	Yes	species info	Breeding
Red-headed Woodpecker (*Melanerpes erythrocephalus*)	Yes	species info	Breeding
Short-eared Owl (*Asio flammeus*)	Yes	species info	Wintering
Wood Thrush (*Hylocichla mustelina*)	Yes	species info	Breeding
Worm eating Warbler (*Helmitheros vermivorum*)	Yes	species info	Breeding

NWI Wetlands (USFWS National Wetlands Inventory).

The U.S. Fish and Wildlife Service is the principal Federal agency that provides information on the extent and status of wetlands in the U.S., via the National Wetlands Inventory Program (NWI). In addition to impacts to wetlands within your immediate project area, wetlands outside of your project area may need to be considered in any evaluation of project impacts, due to the hydrologic nature of wetlands (for example, project activities may affect local hydrology within, and outside of, your immediate project area). It may be helpful to refer to the USFWS National Wetland Inventory website. The designated FWS office can also assist you. Impacts to wetlands and other aquatic habitats from your project may be subject to regulation under Section 404 of the Clean Water Act, or other State/Federal Statutes. Project Proponents should discuss the relationship of these requirements to their project with the Regulatory Program of the appropriate U.S. Army Corps of Engineers District.

Data Limitations, Exclusions and Precautions
The Service's objective of mapping wetlands and deepwater habitats is to produce reconnaissance level information on the location, type and size of these resources. The maps are prepared from the analysis of high altitude imagery. Wetlands are identified based on vegetation, visible hydrology and geography. A margin of error is inherent in the use of imagery; thus, detailed on-the-ground inspection of any particular site may result in revision of the wetland boundaries or classification established through image analysis.

The accuracy of image interpretation depends on the quality of the imagery, the experience of the image analysts, the amount and quality of the collateral data and the amount of ground truth verification work

conducted. Metadata should be consulted to determine the date of the source imagery used and any mapping problems.

Wetlands or other mapped features may have changed since the date of the imagery and/or field work. There may be occasional differences in polygon boundaries or classifications between the information depicted on the map and the actual conditions on site.

Exclusions - Certain wetland habitats are excluded from the National mapping program because of the limitations of aerial imagery as the primary data source used to detect wetlands. These habitats include seagrasses or submerged aquatic vegetation that are found in the intertidal and subtidal zones of estuaries and nearshore coastal waters. Some deepwater reef communities (coral or tuberficid worm reefs) have also been excluded from the inventory. These habitats, because of their depth, go undetected by aerial imagery.

Precautions - Federal, state, and local regulatory agencies with jurisdiction over wetlands may define and describe wetlands in a different manner than that used in this inventory. There is no attempt, in either the design or products of this inventory, to define the limits of proprietary jurisdiction of any Federal, state, or local government or to establish the geographical scope of the regulatory programs of government agencies. Persons intending to engage in activities involving modifications within or adjacent to wetland areas should seek the advice of appropriate federal, state, or local agencies concerning specified agency regulatory programs and proprietary jurisdictions that may affect such activities.

IPaC is unable to display wetland information at this time.

Photos of Project Area

Photo 1: Facing North- Pump house and levee.

Photo 2: Facing Northeast- Pump house and white pine/ arborvitae to be removed.

Photo 3: Facing Southeast- Pumphouse and white pine/ arborvitae to be removed.

Photo 4: Facing East- Pump house and white pine/ arborvitae to be removed.

Photo 5: Facing South- Pump house and white pine/ arborvitae to be removed.

Photo 6: Facing West- Pump house and white pine trees to be removed.

U.S. Fish & Wildlife Service

Environmental Conservation Online System
Conserving the Nature of America
Enter Search Term(s):

Search

- ECOS>
- Species Profile for northern long-eared Bat (Myotis septentrionalis)

northern long-eared Bat (Myotis septentrionalis)

Federal Register | Conservation Plans | Petitions | Life History

Search for images on digitalmedia.fws.gov

Taxonomy: View taxonomy in ITIS

Listing Status: Proposed Endangered

General Information

The northern long-eared bat is a medium-sized bat about 3 to 3.7 inches in length but with a

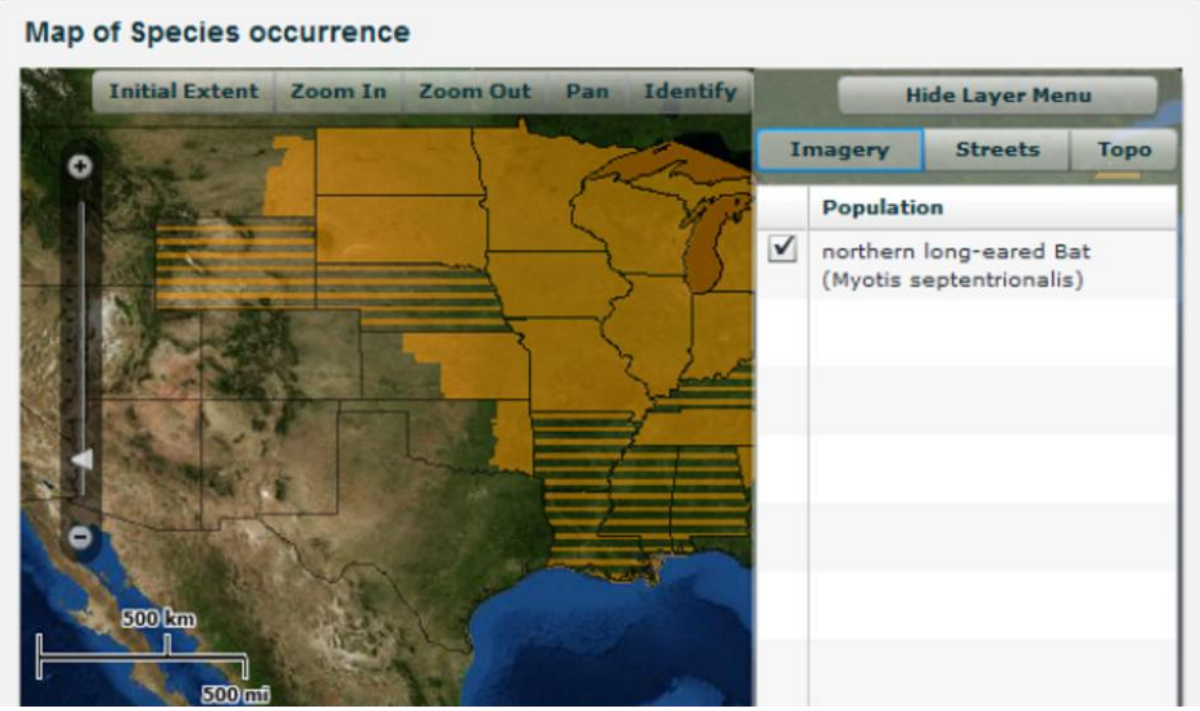

wingspan of 9 to 10 inches. As its name suggests, this bat is distinguished by its long ears, particularly as compared to other bats in its genus, Myotis, which are actually bats noted for their small ears (Myotis means mouse-eared). The northern long-eared bat is found across much of the eastern and north central United States and all Canadian provinces from the Atlantic coast west to the southern Northwest Territories and eastern British Columbia. The species' range includes 39 states. White-nose syndrome, a fungal disease known to affect bats, is currently the predominant threat to this bat, especially throughout the Northeast where the species has declined by up to 99 percent from pre-white-nose syndrome levels at many hibernation sites. Although the disease has not yet spread throughout the northern long-eared bat's entire range (white-nose syndrome is currently found in at least 22 of 39 states where the northern long-eared bat occurs), it continues to spread. Experts expect that where it spreads, it will have the same impact as seen in the Northeast.

- **States/US Territories** in which the northern long-eared Bat, is known to or is believed to occur: Alabama , Arkansas , Connecticut , Delaware , District of Columbia , Florida , Georgia , Illinois , Indiana , Iowa , Kansas , Kentucky , Louisiana , Maine , Maryland , Massachusetts , Michigan , Minnesota , Mississippi , Missouri , Montana , Nebraska , New Hampshire , New Jersey , New York , North Carolina , North Dakota , Ohio , Oklahoma , Pennsylvania , Rhode Island , South Carolina , South Dakota , Tennessee , Vermont , Virginia , West Virginia , Wisconsin , Wyoming
- **US Counties** in which the northern long-eared Bat, is known to or is believed to occur: View All
- Additional species information

Current Listing Status Summary

Status	Date Listed	Lead Region	Where Listed
Proposed Endangered		Great Lakes-Big Rivers Region (Region 3)	

» Federal Register Documents

Most Recent Federal Register Documents (Showing 5 of 5)

Date	Citation Page	Title
11-18-2014	79 FR 68657 68659	Endangered Species Status for the Northern Long-Eared Bat: Reopening of comment period
06-30-2014	79 FR 36698 36699	6-Month Extension of Final Determination on the Proposed Endangered Status for the Northern Long-Eared Bat
12-02-2013	78 FR 72058 72059	Listing the Northern Long-Eared Bat as an Endangered Species
10-02-2013	78 FR 61045 61080	12-Month Finding on a Petition To List the Eastern Small-Footed Bat and the Northern Long-Eared Bat as Endangered or Threatened Species; Listing the Northern Long-Eared Bat as an Endangered Species; Proposed Rule
06-29-2011	76 FR 38095 38106	90-Day Finding on a Petition To List the Eastern Small-Footed Bat and the Northern Long-Eared Bat as Threatened or Endangered

» Conservation Plans

No conservation plans have been created for northern long-eared Bat,

» Petitions

Most Recent Petition Findings (Showing 1 of 1)

Date	Citation Page	Title	Finding
06/29/2011	76 FR 38095 38106	90-Day Finding on a Petition To List the Eastern Small-Footed Bat and the Northern Long-Eared Bat as Threatened or Endangered	• Notice 90-day Petition Finding, Substantial

» Life History

Habitat Requirements

During summer, northern long-eared bats roost singly or in colonies underneath bark, in cavities, or in crevices of both live and dead trees. Males and non-reproductive females may also roost in cooler places, like caves and mines. This bat seems opportunistic in selecting roosts, using tree species based on suitability to retain bark or provide cavities or crevices. It has also been found, rarely, roosting in structures like barns and sheds. Northern long-eared bats spend winter hibernating in caves and mines, called hibernacula. They typically use large caves or mines with large passages and entrances; constant temperatures; and high humidity with no air currents. Specific areas where they hibernate have very high humidity, so much so that droplets of water are often seen on their fur. Within hibernacula, surveyors find them in small crevices or cracks, often with only the nose and ears visible.

Food Habits

Northern long-eared bats emerge at dusk to fly through the understory of forested hillsides and ridges feeding on moths, flies, leafhoppers, caddisflies, and beetles, which they catch while in flight using echolocation. This bat also feeds by gleaning motionless insects from vegetation and water surfaces.

Reproductive Strategy

Breeding begins in late summer or early fall when males begin swarming near hibernacula. After copulation, females store sperm during hibernation until spring, when they emerge from their hibernacula, ovulate, and the stored sperm fertilizes an egg. This strategy is called delayed fertilization. After fertilization, pregnant females migrate to summer areas where they roost in small colonies and give birth to a single pup. Maternity colonies, with young, generally have 30 to 60 bats, although larger maternity colonies have been observed. Most females within a maternity colony give birth around the same time, which may occur from late May or early June to late July, depending where the colony is located within the species' range. Young bats start flying by 18 to 21 days after birth. Adult northern long-eared bats can live up to 19 years.

» Other Resources

NatureServe Explorer Species Reports -- NatureServe Explorer is a source for authoritative conservation information on more than 50,000 plants, animals and ecological communtities of the U.S and Canada. NatureServe Explorer provides in-depth information on rare and endangered species, but includes common plants and animals too. NatureServe Explorer is a product of NatureServe in collaboration with the Natural Heritage Network.

ITIS Reports -- ITIS (the Integrated Taxonomic Information System) is a source for authoritative taxonomic information on plants, animals, fungi, and microbes of North America and the world.

FWS Digital Media Library -- The U.S. Fish and Wildlife Service's National Digital Library is a searchable collection of selected images, historical artifacts, audio clips, publications, and video.

Governor's Office of Storm Recovery

ANDREW M. CUOMO
Governor

LISA BOVA-HIATT
Executive Director

December 2, 2016

Ms. Patricia Cole
Endangered Species Biologist
U.S. Fish & Wildlife Service
New York Field Office
3817 Luker Rd.
Cortland, NY 13045

Re: ESA/MBTA/BGEPA Consultation
New York Rising Community Reconstruction Program
Robert Street Stormwater Pump Station Upgrade Project
549 Vestal Parkway, Town of Vestal, Broome County, New York

Dear Ms. Cole:

The Governor's Office of Storm Recovery (GOSR), operating under the auspices of the New York State Homes and Community Renewal's (NYSHCR) Housing Trust Fund Corporation (HTFC), was established to aid the statewide recovery of disaster-affected communities in New York State. GOSR is administering a U.S. Department of Housing and Urban Development (HUD) Community Development Block Grant for Disaster Recovery (CDBG-DR), including the New York Rising Community Reconstruction (NYRCR) Program. The environmental review for projects funded under the NYRCR Program are processed on a case by case basis in accordance with the United States Fish and Wildlife Service (USFWS) New York Field Office's online project review process. The project described herein was analyzed pursuant to Section 7 of the Endangered Species Act (ESA) of 1973 (87 Stat. 884, as amended; 16 U.S.C. 1531 et seq.), the Bald and Golden Eagle Protection Act (BGEPA) (16 U.S.C. 668-668d); and the Migratory Bird Treaty Act (MBTA) (16 U.S.C. 703-712; Ch. 128; July 13, 1918; 40 Stat 755).

A project review package documenting a No Effect determination for the Robert Street Stormwater Pump Station Upgrade Project (Project) was previously sent to USFWS on February 4, 2015 (**Attachment 1**). USFWS responded on February 23, 2015 acknowledging receipt of the No Effect determination and indicated that no further ESA consultation would be required (**Attachment 2**). Since it has been nearly two years since the previous submission, we are re-submitting case materials so that the USFWS can send an updated acknowledgement of the determination made by GOSR that the Project will have No Effect on the northern long-eared bat (NLEB). If the USFWS does not respond within 30 days from submittal of this document, then GOSR may presume that its determinations are informed by the best available information and its project responsibilities under Section 7 of the ESA have been fulfilled.

Proposed Project Overview

The Robert Street Stormwater Pump Station Upgrade involves the conversion of a defunct sanitary pump station to a stormwater pump station in a neighborhood adjacent to 549 Vestal Parkway, Town of Vestal, Broome County, New York in order to reduce flood risk to the surrounding neighborhood. Upon conversion,

the pump station will drain a stormwater retention swale directly adjacent to the pump station when stormwater begins to pond within the adjacent neighborhood, thereby preventing or limiting flooding of the homes. Construction will occur within the existing pump station and will include two pipes installed in a westerly direction from the pump station over a levee adjacent to Choconut Creek. Additionally, gravity flow piping will be placed in the drainage swale leading to the pump house in order to feed the ponding water into the pump house. The location of the proposed project activities is identified on the enclosed aerial map, street map, and United States Geological Survey (USGS) topographic map (**Attachment 3**). Project site plans are included in **Attachment 4**.

The proposed work comprises the combined use of the converted pump station and its two new outfall pipes in order to drain stormwater into the Choconut Creek. The project will also involve the construction of a 36-inch diameter gravity flow influent pipe that will run adjacent to NYS Route 434. This pipe will run from a proposed concrete influent structure that will be built near the northwestern limit of Elizabeth Street. Included in this structure will be a sharp-crested rectangular weir gate to control the flow diverted to the pump station. Electrical service is also proposed to be installed underground from a nearby 3-phase utility pole located adjacent to NYS Route 434. The electric service is proposed to run along the area of the concrete influent structure and follow underground within the vicinity of the 36-inch diameter gravity flow influent pipe to the existing Robert Street Pump Station.

The current above-grade pump station structure will be removed and replaced with a pavilion-type structure. Stormwater is proposed to flow over an operator adjustable weir level to enter a concrete influent structure located adjacent to the existing stormwater drainage ditch. Water will travel from the influent weir structure through a 36" smooth interior corrugated polyethylene pipe to the pump station. The below-grade pump station infrastructure will be repurposed in-place and will include the installation of two 100-HP submersible pumps with interior station piping and valves. Dual 24-inch effluent force mains will be installed from the existing pump station location and will end with duckbill check valves at the discharge points in the adjacent Choconut Creek. The pipes will be positioned from the southern side of the pump station and will turn west to be approximately perpendicular to the adjacent swale and levee. The effluent force main pipes will be approximately 225 feet in length. Two air release valve manholes will also be constructed along these force main lines. The project will involve excavation and grading in order to install the washed gravel piping bed and for fill placement over the piping after the piping is installed. Minor excavation will be necessary to install supports in the swale between the levee and the pump station. Piping will be mounted on the supports so that it rests at an above-ground level over the swale location. The piping will be supported so that the section running across the swale is above ground, and the pipe sections installed on the levee will be installed on washed gravel bedding. The sections of pipe on the levee will be filled over and seeded. The two pipes, which will be installed adjacent to each other, will be approximately 225 feet in length and the diameter of the pipes are proposed to be 24-inches in diameter, but could be up to 36 inches.

The pipe section on the levee will be overlain with topsoil and seeded. Native vegetation will be used to reseed the disturbed area and all topsoil and gravel used will be clean so as not to introduce contaminants into the area. The proposed pipe outfall locations will be placed over the levee and down the side of the Choconut Creek streambank. The outfall locations of the pipes on the bank of Choconut Creek will require the installation of a concrete headwall, and rip rap will be placed below the outfall to prevent erosion. The pipes will be installed in a concrete headwall, with rip rap a minimum of two feet deep and keyed in to the existing slope for a minimum of two feet to prevent movement and erosion during high flow events in the Choconut Creek. Additionally, a paved access road will be extended off Robert Street, to the northwestern side of the pump station. This access road will include compacted granular backfill, a geogrid fabric placed on prepared subgrade, 12 inches of a crushed stone subbase per NYSDOT 304.12, and new asphalt cover with a 2-foot shoulder. It is not anticipated that the stream bed embankment will be disturbed during construction as the force main and outfall headwall will be placed above the ordinary high water mark. The pipes will be installed using concrete anchors to prevent movement and damage during high flow events in

the Choconut Creek.

Compliance

The USFWS New York Ecological Services Field Office was contacted through the Information, Planning, and Conservation System (IPaC) regarding the potential presence of species under the jurisdiction of the USFWS within the Project area. The IPaC Trust Resources Report is included as **Attachment 5** and the USFWS Official Species List is included as **Attachment 6**. The USFWS Official Species List indicates that one listed species may occur within the vicinity of the Project area, the northern long-eared bat (*Myotis septentrionalis* - threatened). There are no critical habitats for this species, or any other species within the Project area.

According to USFWS documentation, the northern long-eared bat roosts underneath tree bark, in cavities, and in the crevices of dead and live trees. The project will involve the removal of 6-8 white pine trees and arborvitae in the area where ground disturbance will occur. A review of photos of the site, the trees, and the surrounding area (site photographs are included in **Attachment 7**) indicates no summer/ roosting habitat for the northern long-eared bat (i.e. there is not sloughing of bark or open cavities/ crevices). Further, given the low number of trees to be removed and since the general area surrounding the building is residential/open space, impacts to the northern long eared bat are not expected based on the project scope. Additionally, a records request response for the Project area was received from the New York Natural Heritage Program (NYNHP) received that indicated that there are no records of the NLEB or other USFWS designated threatened or endangered species in the vicinity of the Project (**Attachment 8**).

The IPaC Trust Resources Report indicates that there are 18 species of migratory birds protected by the MBTA and BGEPA that could potentially be affected by the Project, including the *Haliaeetus leucocephalus* (bald eagle). The New York State Department of Environmental Conservation (NYSDEC) Plan for Bald Eagles in New York State[1] provides a map of bald eagle breeding territories in the state. There are no known breeding bald eagles within the vicinity of the Proposed Project and a NYNHP record request response for the Project area did not indicate that there any Bald Eagle nesting locations be present in the vicinity of the Project area. (**Attachment 8**); therefore, no adverse impacts to breeding bald eagles are expected as a result of the Project. It is anticipated that passerine birds would temporarily leave the area during construction due to noise and disturbance.

Conclusions

Project implementation would be conditioned upon issuance of applicable federal and state permits and would be constructed in accordance with federal and state permit conditions. The proposed Project would not jeopardize the continued existence of ESA species or destroy or adversely modify their critical habitat. GOSR is submitting the above information as notice of its No Effect determination and requests acknowledgement from USFWS that they have received this determination that the proposed Project would have No Effect on migratory birds, endangered/threatened species, or critical habitat for species under USFWS jurisdiction.

For additional information, please contact me by email at Alicia.Shultz@nyshcr.org or by telephone at (518) 474-0647.

Sincerely,

Alicia Shultz

Community Developer – Environmental Services
New York State Homes & Community Renewal
38-40 State St.,408N,
Hampton Plaza, Albany, NY 12207

Attachments listed on next page.

Attachments:

Attachment 1: No Effect Determination previously submitted on February 4, 2015
Attachment 2: USFWS Acknowledgement of No Effect Determination dated February 23, 2015
Attachment 3: Project Location Maps (Street Map, USGS Topographic Map, and Aerial Map)
Attachment 4: Project Site Plans
Attachment 5: IPaC Trust Resources Report
Attachment 6: USFWS Official Species List
Attachment 7: Site Photographs
Attachment 8: NYNHP Records Request Response dated September 2, 2016

[1] "NYSDEC Conservation Plan for Bald Eagles in New York State". January 2015.

Attachment 1

February 4, 2015

Patricia Cole
Fish and Wildlife Service- New York Field Office
3817 Luker Road
Cortland, NY 13045

VIA EMAIL: FW5ES_NYFO@fws.gov

Re: Online Project Review Request, Robert Street Stormwater Pump Station Upgrade, Town of Vestal, Broome County, New York

Dear Ms. Cole:

The Governor's Office of Storm Recovery (GOSR), operating under the auspices of the New York Homes and Community Renewal's (NYSHCR) Housing Trust Fund Corporation, was established to aid the statewide recovery of disaster-affected communities in New York State. GOSR is administering a U.S. Department of Housing and Urban Development (HUD) Community Development Block Grant for Disaster Recovery (CDBG-DR), including the New York Rising Community Reconstruction (NYRCR) Program. This letter requests consultation with the U.S. Fish and Wildlife Service (USFWS) pursuant to section 7 of the Endangered Species Act (ESA) of 1973 (87 Stat. 884, as amended; 16 U.S.C. 1531 *et seq*.), the Bald and Golden Eagle Protection Act (BGEPA) (16 U.S.C. 668-668d), and the Migratory Bird Treaty Act (MBTA) (16 U.S.C. 703-712; Ch. 128; July 13, 1918; 40 Stat 755) for a single project proposed to receive CDBG-DR assistance. The environmental review for projects funded under the NYRCR Program are processed on a case-by-case basis in accordance with the USFWS New York Field Office's online project review process.

We have reviewed the referenced project using the New York Field Office's online project review process and have followed all guidance and instructions in completing the review. We completed our review on 1/28/2015 and are submitting our project review package in accordance with the instructions to request review and documentation that the USFWS agrees the project will have "no effect" on endangered/threatened species or on critical habitat.

Due to the damage caused by flooding and erosion as a result of Tropical Storm Lee and Hurricane Irene, the Town of Vestal has applied to GOSR under the NYRCR Program to fund the proposed action. The proposed action is the conversion of a defunct sanitary pump house to a stormwater pump house in order to reduce flood risk to the surrounding neighborhood. The converted pump house will pump ponding stormwater in the adjacent swale over a levee into Choconut Creek during storm events. This will prevent stormwater from flooding the surrounding neighborhood.

The location of the project is 549 Vestal Parkway, Town of Vestal, Broome County, NY. The location and the action area are identified on the enclosed USGS topographic map, street map, and aerial map.

Construction activities will include work within the existing pump house to upgrade the pumps. Existing piping from the pump house to Choconut Creek may be used for this project. However, whether these pipes are serviceable is not known at this juncture. Given the age of the piping, it is expected new piping will have to be constructed in place of the old pipe. In this case, the construction will include two new pipes installed in a westerly direction from the pump house over a levee and into the adjacent Choconut Creek. The piping will be supported so that the section running across the stormwater swale is above ground. The pipe sections installed on the levee will be installed on washed gravel bedding and will be filled over and seeded. The two pipes, which will be installed adjacent to each other, will be approximately 225 feet in length each, and the diameter of the pipes will be up to 36 inches.

The project will involve the removal of 6-8 white pine trees and arborvitae in the area where ground disturbance will occur. A review of photos of the site, the trees, and the surrounding area indicates no summer/ roosting habitat for the northern long eared bat (i.e. there is not sloughing of bark or open cavities/ crevices). Photos of the trees are included in the enclosures of this project review request. Further, given the low number of trees to be removed and the general area surrounding the building to be residential/open space, impacts to the northern long eared bat are not expected based on project scope. If a response from the NYNHP indicates that the northern long-eared bat or bald eagle nesting locations are present in the vicinity of the project area, an endangered species survey and subsequent consultation with the USFWS, NHP, and DEC will be completed before any work commences.

The enclosed project review package provides the information about the species, critical habitat, and bald eagles considered in our review, and the species conclusions table included in the package identifies our determinations for the resources that may be affected by the project. This project is still awaiting response from the NYNHP. If a response from the NYNHP indicates that the northern long-eared bat or bald eagle nesting locations are present in the vicinity of the project area, an endangered species survey and subsequent consultation with the USFWS, NHP, and DEC will be completed before any work commences.

For additional information, please contact me by email at *Thomas.King@stormrecovery.ny.gov* or by telephone at (646) 417-4660.

Sincerely,

Thomas J. King
Assistant General Counsel

Enclosures:

1) Species Conclusion Table
2) Aerial, Topographic, and Street maps
3) Trust Resource List for project area
4) Photos of Project Area
5) Northern long-eared bat fact sheet

Species Conclusions Table

Project Name: Robert Street Stormwater Pump Station Upgrade

Date: 1/28/2015

Species Name/Critical Habitat	Potential Habitat Present?	Species Present?	Critical Habitat Present?	ESA / Eagle Act Determination	Notes / Documentation Summary (include full rationale in your report)
Northern long-eared Bat (Myotis septentrionalis)	No	Awaiting response from NYNHP. We do not anticipate the presence of this species because suitable habitat is not identified at the project location.	No	No effects are Not anticipated. Pending response from NYNHP.	The project area is not in a critical habitat. According to USFWS documentation, the northern long-eared bat roosts underneath tree bark, in cavities, and in the crevices of dead and live trees. The project will involve the removal of 6-8 white pine trees and arborvitae in the area where ground disturbance will occur. A review of photos of the site, the trees, and the surrounding area indicates no summer/ roosting habitat for the northern long eared bat (i.e. there is not sloughing of bark or open cavities/ crevices). Further, given the low number of trees to be removed and the general area surrounding the building to be residential/open space, impacts to the northern long eared bat are not expected based on project scope. If a response from the NYNHP indicates that the northern long-eared bat or bald eagle nesting locations are present in the vicinity of the project area, an endangered species survey and subsequent consultation with the USFWS, NHP, and DEC will be completed before any work commences.

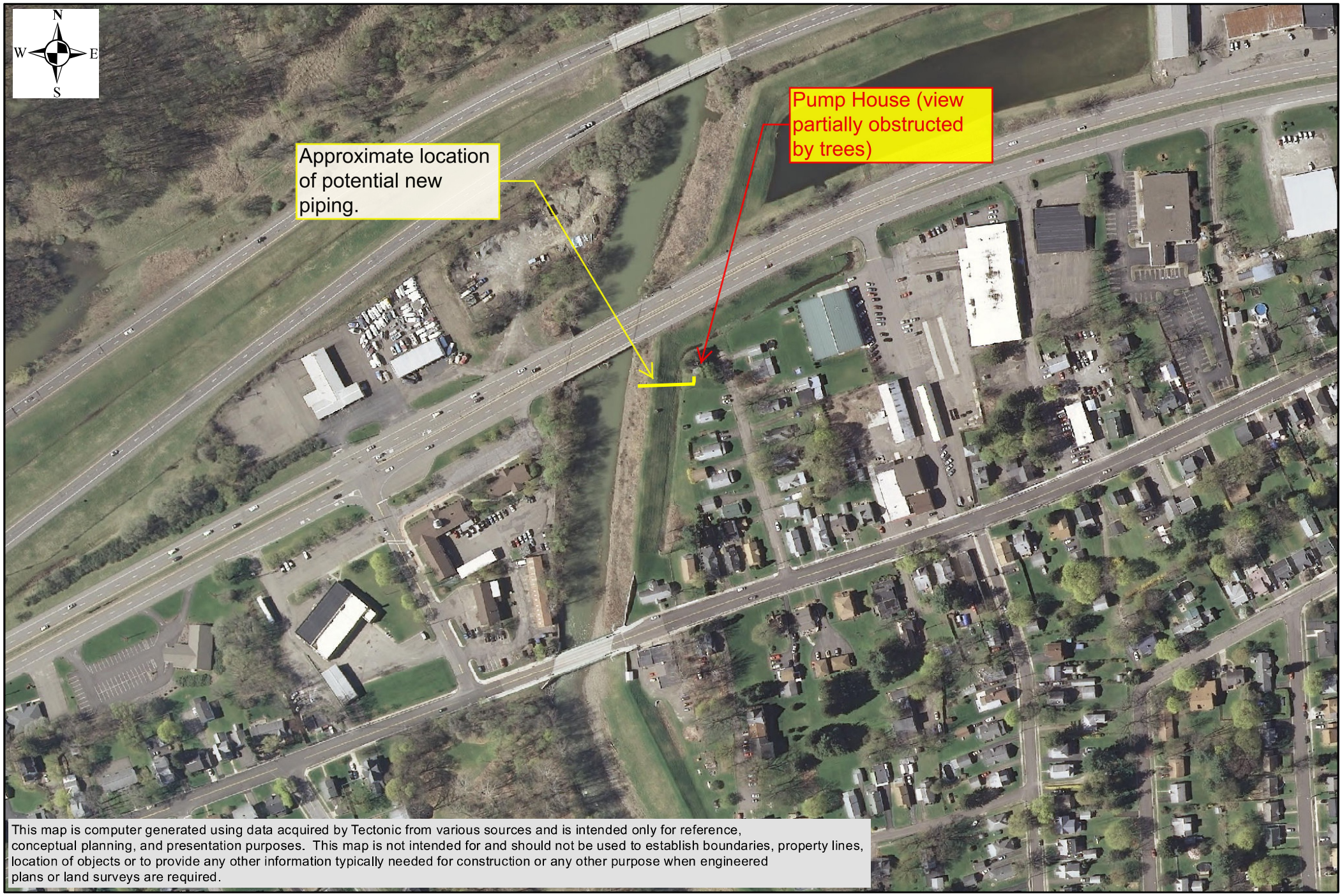

This map is computer generated using data acquired by Tectonic from various sources and is intended only for reference, conceptual planning, and presentation purposes. This map is not intended for and should not be used to establish boundaries, property lines, location of objects or to provide any other information typically needed for construction or any other purpose when engineered plans or land surveys are required.

TECTONIC

Practical Solutions, Exceptional Service

TECTONIC
70 Pleasant Hill Road,
Mountainville, N.Y. 10953
845.534.5959 voice 845.534-5999 fax
www.tectonicengineering.com

Aerial Image
Robert Street Stormwater Pump Station Upgrade
Town of Vestal, NY

0 125 250 500 Feet

Map Created 1/12/2015 by JG

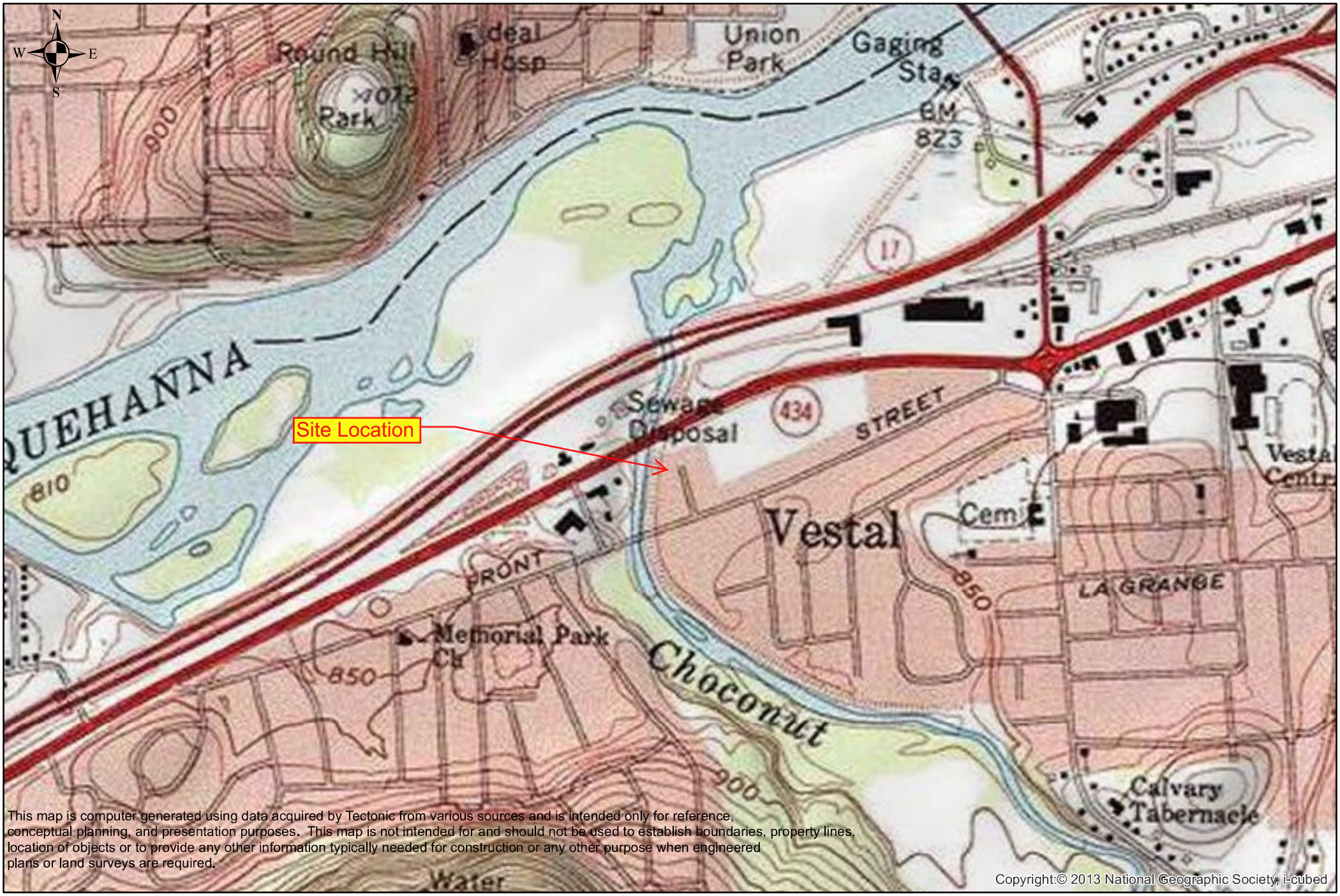

This map is computer generated using data acquired by Tectonic from various sources and is intended only for reference, conceptual planning, and presentation purposes. This map is not intended for and should not be used to establish boundaries, property lines, location of objects or to provide any other information typically needed for construction or any other purpose when engineered plans or land surveys are required.

Copyright:© 2013 National Geographic Society, i-cubed

TECTONIC

Practical Solutions, Exceptional Service

TECTONIC
70 Pleasant Hill Road,
Mountainville, N.Y. 10953
845.534.5959 voice 845.534-5999 fax
www.tectonicengineering.com

0 0.1 0.2 0.4 Miles

Topographic Map
Robert Street Stormwater Pump Station Upgrade
Town of Vestal, NY

This map is computer generated using data acquired by Tectonic from various sources and is intended only for reference, conceptual planning, and presentation purposes. This map is not intended for and should not be used to establish boundaries, property lines, location of objects or to provide any other information typically needed for construction or any other purpose when engineered plans or land surveys are required.

Sources: Esri, HERE, DeLorme, USGS, Intermap, increment P Corp., NRCAN, Esri Japan, METI, Esri China (Hong Kong), Esri (Thailand), TomTom, MapmyIndia, © OpenStreetMap contributors, and the GIS User Community

TECTONIC

Practical Solutions, Exceptional Service

TECTONIC
70 Pleasant Hill Road,
Mountainville, N.Y. 10953
845.534.5959 voice 845.534-5999 fax
www.tectonicengineering.com

0 0.1 0.2 0.4 Miles

Street Map
Robert Street Stormwater Pump Station Upgrade
Town of Vestal, NY

U.S. Fish and Wildlife Service

Trust Resources List

This resource list is to be used for planning purposes only — it is not an official species list.

Endangered Species Act species list information for your project is available online and listed below for the following FWS Field Offices:

New York Ecological Services Field Office
3817 LUKER ROAD
CORTLAND, NY 13045
(607) 753-9334
http://www.fws.gov/northeast/nyfo/es/section7.htm

Project Name:

Vestal- Robert Street Pump Station

U.S. Fish and Wildlife Service

Trust Resources List

Project Location Map:

Project Counties:

Broome, NY

Geographic coordinates (Open Geospatial Consortium Well-Known Text, NAD83):

MULTIPOLYGON (((-76.0636053 42.0835328, -76.0636482 42.0838597, -76.0627368 42.0841463, -76.0627153 42.0838433, -76.0636053 42.0835328)))

Project Type:

** Other **

U.S. Fish and Wildlife Service

Trust Resources List

Endangered Species Act Species List (USFWS Endangered Species Program).

There are a total of **1** threatened or endangered species on your species list. Species on this list should be considered in an effects analysis for your project and could include species that exist in another geographic area. For example, certain fishes may appear on the species list because a project could cause downstream effects on the species. Critical habitats listed under the **Has Critical Habitat** column may or may not lie within your project area. See the **Critical habitats within your project area** section below for critical habitat that lies within your project area. Please contact the designated FWS office if you have questions.

Species that should be considered in an effects analysis for your project:

Mammals	Status		Has Critical Habitat	Contact
northern long-eared Bat (*Myotis septentrionalis*) Population:	Proposed Endangered	species info		New York Ecological Services Field Office

Critical habitats within your project area:

There are no critical habitats within your project area.

FWS National Wildlife Refuges (USFWS National Wildlife Refuges Program).

There are no refuges found within the vicinity of your project.

FWS Migratory Birds (USFWS Migratory Bird Program).

The protection of birds is regulated by the Migratory Bird Treaty Act (MBTA) and the Bald and Golden Eagle Protection Act (BGEPA). Any activity, intentional or unintentional, resulting in take of migratory birds, including eagles, is prohibited unless otherwise permitted by the U.S. Fish and Wildlife Service (50 C.F.R. Sec. 10.12 and 16 U.S.C. Sec. 668(a)). The MBTA has no provision for allowing take of migratory birds that may be unintentionally killed or injured by otherwise lawful activities. For more information regarding these Acts see: http://www.fws.gov/migratorybirds/RegulationsandPolicies.html.

All project proponents are responsible for complying with the appropriate regulations protecting birds when planning and developing a project. To meet these conservation obligations, proponents should identify potential or existing project-related impacts to migratory birds and their habitat and develop and implement conservation measures that avoid, minimize, or compensate for these impacts. The Service's Birds of Conservation Concern (2008) report identifies species, subspecies, and populations of all migratory nongame birds that, without

additional conservation actions, are likely to become listed under the Endangered Species Act as amended (16 U.S.C 1531 et seq.).

For information about Birds of Conservation Concern, go to: http://www.fws.gov/migratorybirds/CurrentBirdIssues/Management/BCC.html.

To search and view summaries of year-round bird occurrence data within your project area, go to the Avian Knowledge Network Histogram Tool links in the Bird Conservation Tools section at: http://www.fws.gov/migratorybirds/CCMB2.htm.

For information about conservation measures that help avoid or minimize impacts to birds, please visit: http://www.fws.gov/migratorybirds/CCMB2.htm.

Migratory birds of concern that may be affected by your project:
There are **15** birds on your Migratory birds of concern list. The underlying data layers used to generate the migratory bird list of concern will continue to be updated regularly as new and better information is obtained. User feedback is one method of identifying any needed improvements. Therefore, users are encouraged to submit comments about any questions regarding species ranges (e.g., a bird on the USFWS BCC list you know does not occur in the specified location appears on the list, or a BCC species that you know does occur there is not appearing on the list). Comments should be sent to the ECOS Help Desk.

Species Name	Bird of Conservation Concern (BCC)	Species Profile	Seasonal Occurrence in Project Area
American bittern (*Botaurus lentiginosus*)	Yes	species info	Breeding
Bald eagle (*Haliaeetus leucocephalus*)	Yes	species info	Year-round
Black-billed Cuckoo (*Coccyzus erythropthalmus*)	Yes	species info	Breeding
Blue-winged Warbler (*Vermivora pinus*)	Yes	species info	Breeding
Canada Warbler (*Wilsonia canadensis*)	Yes	species info	Breeding
Golden-Winged Warbler (*Vermivora chrysoptera*)	Yes	species info	Breeding
Kentucky Warbler (*Oporornis formosus*)	Yes	species info	Breeding
Least Bittern (*Ixobrychus exilis*)	Yes	species info	Breeding

Louisiana Waterthrush (*Parkesia motacilla*)	Yes	species info	Breeding
Pied-billed Grebe (*Podilymbus podiceps*)	Yes	species info	Breeding
Prairie Warbler (*Dendroica discolor*)	Yes	species info	Breeding
Red-headed Woodpecker (*Melanerpes erythrocephalus*)	Yes	species info	Breeding
Short-eared Owl (*Asio flammeus*)	Yes	species info	Wintering
Wood Thrush (*Hylocichla mustelina*)	Yes	species info	Breeding
Worm eating Warbler (*Helmitheros vermivorum*)	Yes	species info	Breeding

NWI Wetlands (USFWS National Wetlands Inventory).

The U.S. Fish and Wildlife Service is the principal Federal agency that provides information on the extent and status of wetlands in the U.S., via the National Wetlands Inventory Program (NWI). In addition to impacts to wetlands within your immediate project area, wetlands outside of your project area may need to be considered in any evaluation of project impacts, due to the hydrologic nature of wetlands (for example, project activities may affect local hydrology within, and outside of, your immediate project area). It may be helpful to refer to the USFWS National Wetland Inventory website. The designated FWS office can also assist you. Impacts to wetlands and other aquatic habitats from your project may be subject to regulation under Section 404 of the Clean Water Act, or other State/Federal Statutes. Project Proponents should discuss the relationship of these requirements to their project with the Regulatory Program of the appropriate U.S. Army Corps of Engineers District.

Data Limitations, Exclusions and Precautions
The Service's objective of mapping wetlands and deepwater habitats is to produce reconnaissance level information on the location, type and size of these resources. The maps are prepared from the analysis of high altitude imagery. Wetlands are identified based on vegetation, visible hydrology and geography. A margin of error is inherent in the use of imagery; thus, detailed on-the-ground inspection of any particular site may result in revision of the wetland boundaries or classification established through image analysis.

The accuracy of image interpretation depends on the quality of the imagery, the experience of the image analysts, the amount and quality of the collateral data and the amount of ground truth verification work

conducted. Metadata should be consulted to determine the date of the source imagery used and any mapping problems.

Wetlands or other mapped features may have changed since the date of the imagery and/or field work. There may be occasional differences in polygon boundaries or classifications between the information depicted on the map and the actual conditions on site.

Exclusions - Certain wetland habitats are excluded from the National mapping program because of the limitations of aerial imagery as the primary data source used to detect wetlands. These habitats include seagrasses or submerged aquatic vegetation that are found in the intertidal and subtidal zones of estuaries and nearshore coastal waters. Some deepwater reef communities (coral or tuberficid worm reefs) have also been excluded from the inventory. These habitats, because of their depth, go undetected by aerial imagery.

Precautions - Federal, state, and local regulatory agencies with jurisdiction over wetlands may define and describe wetlands in a different manner than that used in this inventory. There is no attempt, in either the design or products of this inventory, to define the limits of proprietary jurisdiction of any Federal, state, or local government or to establish the geographical scope of the regulatory programs of government agencies. Persons intending to engage in activities involving modifications within or adjacent to wetland areas should seek the advice of appropriate federal, state, or local agencies concerning specified agency regulatory programs and proprietary jurisdictions that may affect such activities.

IPaC is unable to display wetland information at this time.

Photos of Project Area

Photo 1: Facing North- Pump house and levee.

Photo 2: Facing Northeast- Pump house and white pine/ arborvitae to be removed.

Photo 3: Facing Southeast- Pumphouse and white pine/ arborvitae to be removed.

Photo 4: Facing East- Pump house and white pine/ arborvitae to be removed.

Photo 5: Facing South- Pump house and white pine/ arborvitae to be removed.

Photo 6: Facing West- Pump house and white pine trees to be removed.

U.S. Fish & Wildlife Service

Environmental Conservation Online System
Conserving the Nature of America
Enter Search Term(s):

Search

- ECOS>
- Species Profile for northern long-eared Bat (Myotis septentrionalis)

northern long-eared Bat (Myotis septentrionalis)

Federal Register | Conservation Plans | Petitions | Life History

Search for images on digitalmedia.fws.gov

Taxonomy: View taxonomy in ITIS

Listing Status: Proposed Endangered

General Information

The northern long-eared bat is a medium-sized bat about 3 to 3.7 inches in length but with a

wingspan of 9 to 10 inches. As its name suggests, this bat is distinguished by its long ears, particularly as compared to other bats in its genus, Myotis, which are actually bats noted for their small ears (Myotis means mouse-eared). The northern long-eared bat is found across much of the eastern and north central United States and all Canadian provinces from the Atlantic coast west to the southern Northwest Territories and eastern British Columbia. The species' range includes 39 states. White-nose syndrome, a fungal disease known to affect bats, is currently the predominant threat to this bat, especially throughout the Northeast where the species has declined by up to 99 percent from pre-white-nose syndrome levels at many hibernation sites. Although the disease has not yet spread throughout the northern long-eared bat's entire range (white-nose syndrome is currently found in at least 22 of 39 states where the northern long-eared bat occurs), it continues to spread. Experts expect that where it spreads, it will have the same impact as seen in the Northeast.

- **States/US Territories** in which the northern long-eared Bat, is known to or is believed to occur: Alabama , Arkansas , Connecticut , Delaware , District of Columbia , Florida , Georgia , Illinois , Indiana , Iowa , Kansas , Kentucky , Louisiana , Maine , Maryland , Massachusetts , Michigan , Minnesota , Mississippi , Missouri , Montana , Nebraska , New Hampshire , New Jersey , New York , North Carolina , North Dakota , Ohio , Oklahoma , Pennsylvania , Rhode Island , South Carolina , South Dakota , Tennessee , Vermont , Virginia , West Virginia , Wisconsin , Wyoming
- **US Counties** in which the northern long-eared Bat, is known to or is believed to occur: View All
- Additional species information

Current Listing Status Summary

Status	Date Listed	Lead Region	Where Listed
Proposed Endangered		Great Lakes-Big Rivers Region (Region 3)	

» Federal Register Documents

Most Recent Federal Register Documents (Showing 5 of 5)

Date	Citation Page	Title
11-18-2014	79 FR 68657 68659	Endangered Species Status for the Northern Long-Eared Bat: Reopening of comment period
06-30-2014	79 FR 36698 36699	6-Month Extension of Final Determination on the Proposed Endangered Status for the Northern Long-Eared Bat
12-02-2013	78 FR 72058 72059	Listing the Northern Long-Eared Bat as an Endangered Species
10-02-2013	78 FR 61045 61080	12-Month Finding on a Petition To List the Eastern Small-Footed Bat and the Northern Long-Eared Bat as Endangered or Threatened Species; Listing the Northern Long-Eared Bat as an Endangered Species; Proposed Rule
06-29-2011	76 FR 38095 38106	90-Day Finding on a Petition To List the Eastern Small-Footed Bat and the Northern Long-Eared Bat as Threatened or Endangered

» Conservation Plans

No conservation plans have been created for northern long-eared Bat,

» Petitions

Most Recent Petition Findings (Showing 1 of 1)

Date	Citation Page	Title	Finding
06/29/2011	76 FR 38095 38106	90-Day Finding on a Petition To List the Eastern Small-Footed Bat and the Northern Long-Eared Bat as Threatened or Endangered	• Notice 90-day Petition Finding, Substantial

» Life History

Habitat Requirements

During summer, northern long-eared bats roost singly or in colonies underneath bark, in cavities, or in crevices of both live and dead trees. Males and non-reproductive females may also roost in cooler places, like caves and mines. This bat seems opportunistic in selecting roosts, using tree species based on suitability to retain bark or provide cavities or crevices. It has also been found, rarely, roosting in structures like barns and sheds. Northern long-eared bats spend winter hibernating in caves and mines, called hibernacula. They typically use large caves or mines with large passages and entrances; constant temperatures; and high humidity with no air currents. Specific areas where they hibernate have very high humidity, so much so that droplets of water are often seen on their fur. Within hibernacula, surveyors find them in small crevices or cracks, often with only the nose and ears visible.

Food Habits

Northern long-eared bats emerge at dusk to fly through the understory of forested hillsides and ridges feeding on moths, flies, leafhoppers, caddisflies, and beetles, which they catch while in flight using echolocation. This bat also feeds by gleaning motionless insects from vegetation and water surfaces.

Reproductive Strategy

Breeding begins in late summer or early fall when males begin swarming near hibernacula. After copulation, females store sperm during hibernation until spring, when they emerge from their hibernacula, ovulate, and the stored sperm fertilizes an egg. This strategy is called delayed fertilization. After fertilization, pregnant females migrate to summer areas where they roost in small colonies and give birth to a single pup. Maternity colonies, with young, generally have 30 to 60 bats, although larger maternity colonies have been observed. Most females within a maternity colony give birth around the same time, which may occur from late May or early June to late July, depending where the colony is located within the species' range. Young bats start flying by 18 to 21 days after birth. Adult northern long-eared bats can live up to 19 years.

» Other Resources

NatureServe Explorer Species Reports -- NatureServe Explorer is a source for authoritative conservation information on more than 50,000 plants, animals and ecological communtities of the U.S and Canada. NatureServe Explorer provides in-depth information on rare and endangered species, but includes common plants and animals too. NatureServe Explorer is a product of NatureServe in collaboration with the Natural Heritage Network.

ITIS Reports -- ITIS (the Integrated Taxonomic Information System) is a source for authoritative taxonomic information on plants, animals, fungi, and microbes of North America and the world.

FWS Digital Media Library -- The U.S. Fish and Wildlife Service's National Digital Library is a searchable collection of selected images, historical artifacts, audio clips, publications, and video.

Attachment 2

United States Department of the Interior

FISH AND WILDLIFE SERVICE
New York Field Office
3817 Luker Road
Cortland, NY 13045
Phone: (607) 753-9334 Fax: (607) 753-9699
http://www.fws.gov/northeast/nyfo

To: Thomas King Date: Feb 23, 2015

USFWS File No: 150411

Regarding your: x Letter ___Fax ___Email Dated: Feb 4, 2015

For project: Robert Street stormwater pump station upgrade

Located: _____

In Town/County: Town of Vestal / Broome County

Pursuant to the Endangered Species Act of 1973 (ESA) (87 Stat. 884, as amended; 16 U.S.C. 1531 *et seq.*), the U.S. Fish and Wildlife Service:

→ X Acknowledges receipt of your "no effect" and/or no impact determination. No further ESA coordination or consultation is required.

~~X~~ Acknowledges receipt of your determination. Please provide a copy of your determination and supporting materials to any involved Federal agency for their final ESA determination.

___ Is taking no action pursuant to ESA or any legislation at this time, but would like to be kept informed of project developments.

As a reminder, until the proposed project is complete, we recommend that you check our website (http://www.fws.gov/northeast/nyfo/es/section7.htm) every 90 days from the date of this letter to ensure that listed species presence/absence information for the proposed project is current. Should project plans change or if additional information on listed or proposed species or critical habitat becomes available, this determination may be reconsidered.

USFWS Contact(s): Bobby [illegible]

Supervisor: Patricia Cole Date: 2/23/15

Attachment 3

Street Map

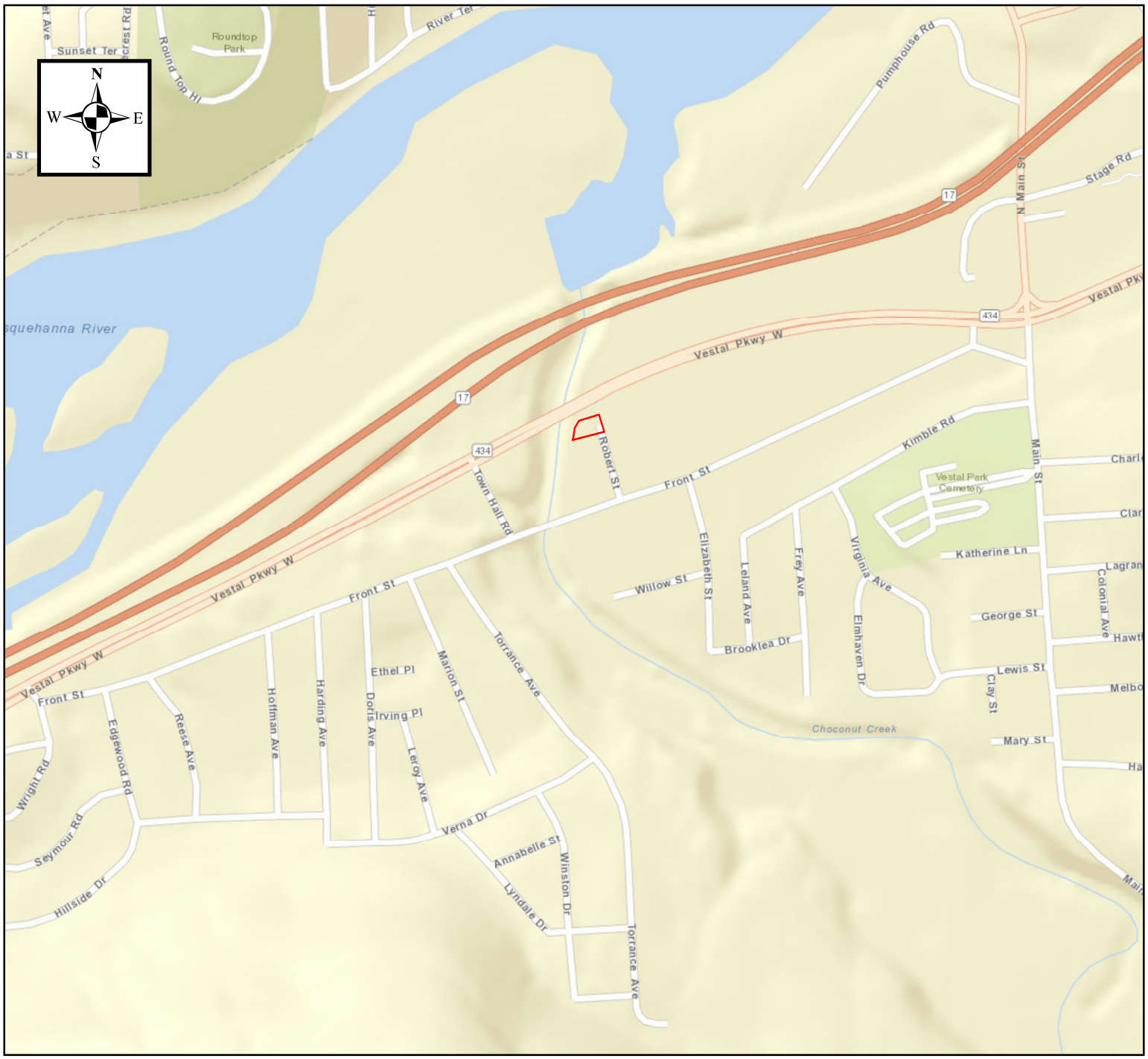

TECTONIC
Practical Solutions, Exceptional Service

0 500 1,000 2,000 Feet

1:10,000

Robert Street Stormwater Pump Station Upgrade
Robert Street
Vestal, NY
Broome County

Legend

Robert Street Stormwater Pump Station (Approximate Boundary)

Topographic Map

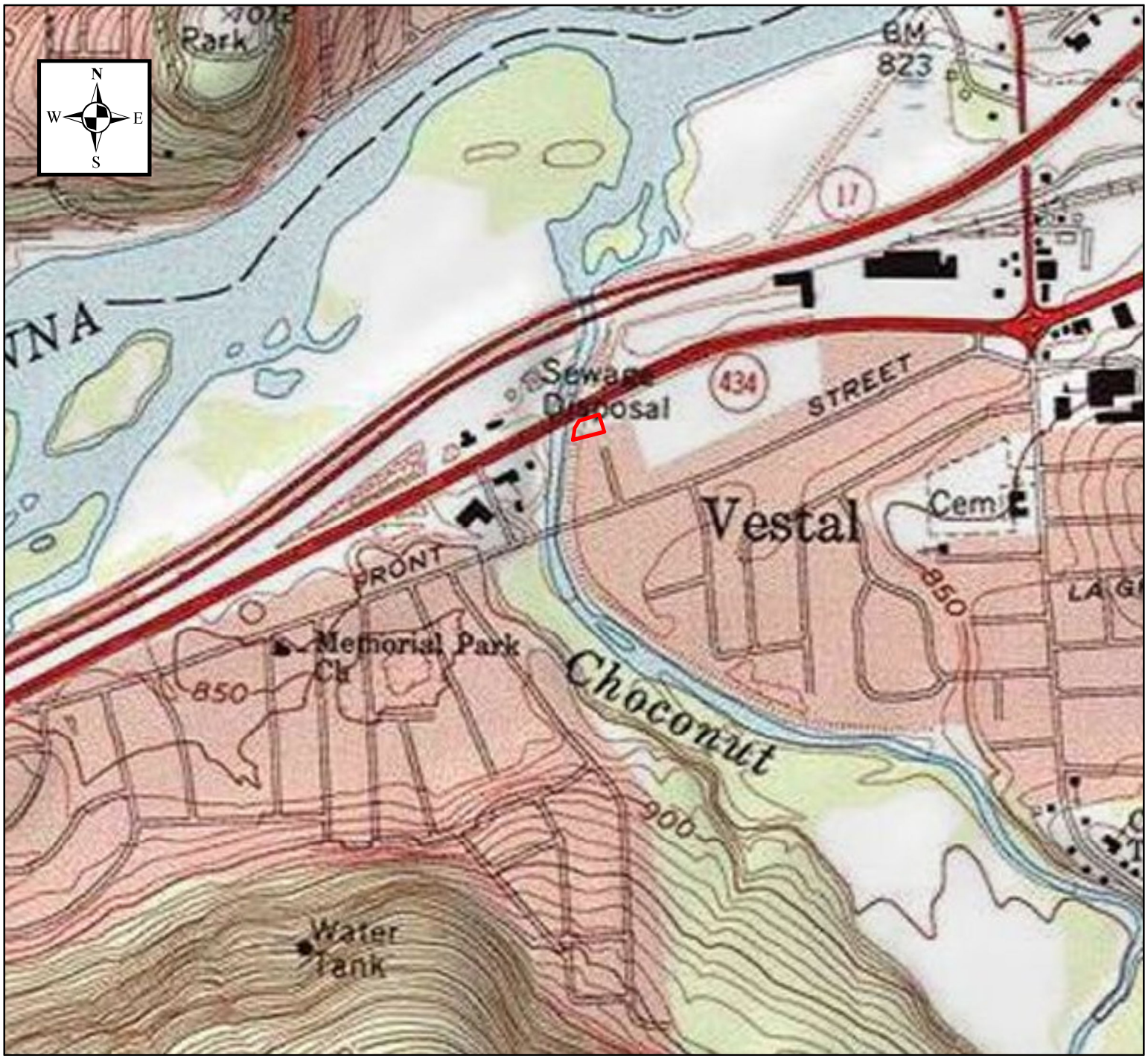

TECTONIC
Practical Solutions, Exceptional Service

0 500 1,000 2,000 Feet

1:10,000

Robert Street Stormwater Pump Station Upgrade
Robert Street
Vestal, NY
Broome County

Legend

Robert Street Stormwater Pump Station (Approximate Boundary)

Aerial Map

TECTONIC
Practical Solutions, Exceptional Service

0 500 1,000 2,000 Feet

1:10,000

Robert Street Stormwater Pump Station Upgrade
Robert Street
Vestal, NY
Broome County

Legend

Robert Street Stormwater Pump Station (Approximate Boundary)

Attachment 4

CONTRACT NO. 1A - GE
CONTRACT NO. 1B - ELE

TOWN O
BROOME COU

JUNE 1

TION

INLET STRUCTURE

DRAINAGE STRUCTURE

AIR/VACUUM RELEASE MAHNOLE

SMH-

ANNOTATION SYMBOLS

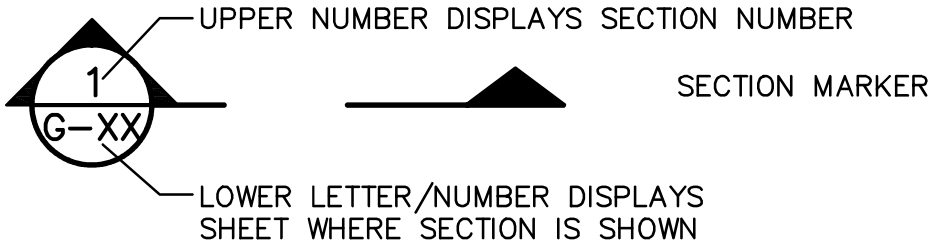

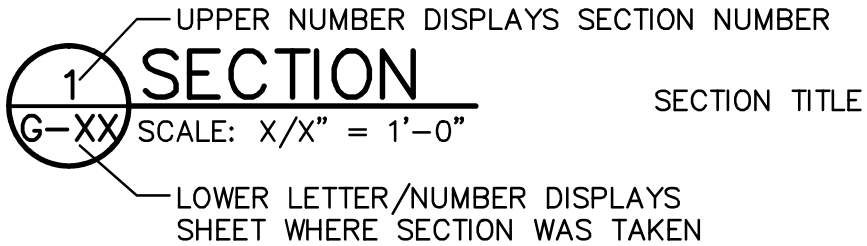

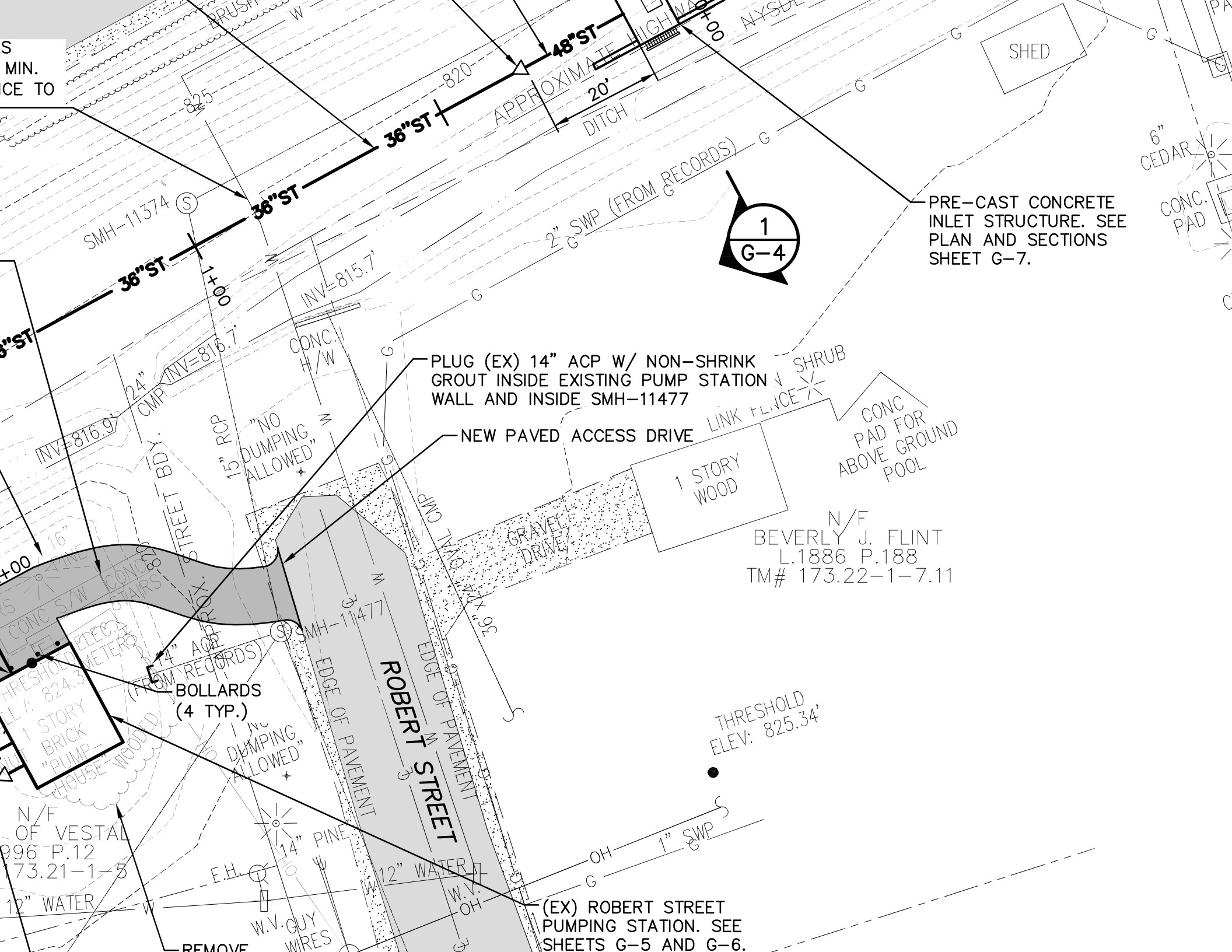

S
MIN.
ICE TO
48"ST
36"ST
36"ST
36"ST
36"ST
APPROXIMATE HIGHWAY
20'
DITCH
SHED
6" CEDAR
CONC. PAD
PRE-CAST CONCRETE INLET STRUCTURE. SEE PLAN AND SECTIONS SHEET G-7.
1
G-4
2" SWP (FROM RECORDS)
SMH-11374
INV=815.7'
INV=816.7'
INV=816.9'
24" CMP
CONC. H/W
PLUG (EX) 14" ACP W/ NON-SHRINK GROUT INSIDE EXISTING PUMP STATION WALL AND INSIDE SMH-11477
NEW PAVED ACCESS DRIVE
SHRUB
LINK FENCE
CONC PAD FOR ABOVE GROUND POOL
1 STORY WOOD
GRAVEL DRIVE
N/F
BEVERLY J. FLINT
L.1886 P.188
TM# 173.22-1-7.11
15" RCP
"NO DUMPING ALLOWED"
STREET BDY.
16" PINE
CONC S/W
CONC STAIRS
SMH-11477
14" ACP (FROM RECORDS)
BOLLARDS (4 TYP.)
EDGE OF PAVEMENT
ROBERT STREET
EDGE OF PAVEMENT
36"x24" OVAL CMP
THRESHOLD ELEV: 825.34'
1 STORY BRICK "PUMP-HOUSE" WOODED
"NO DUMPING ALLOWED"
N/F
OF VESTAL
996 P.12
173.21-1-5
14" PINE
E.H.
12" WATER
12" WATER
W.V.
GUY WIRES
1" SWP
(EX) ROBERT STREET PUMPING STATION. SEE SHEETS G-5 AND G-6.
REMOVE

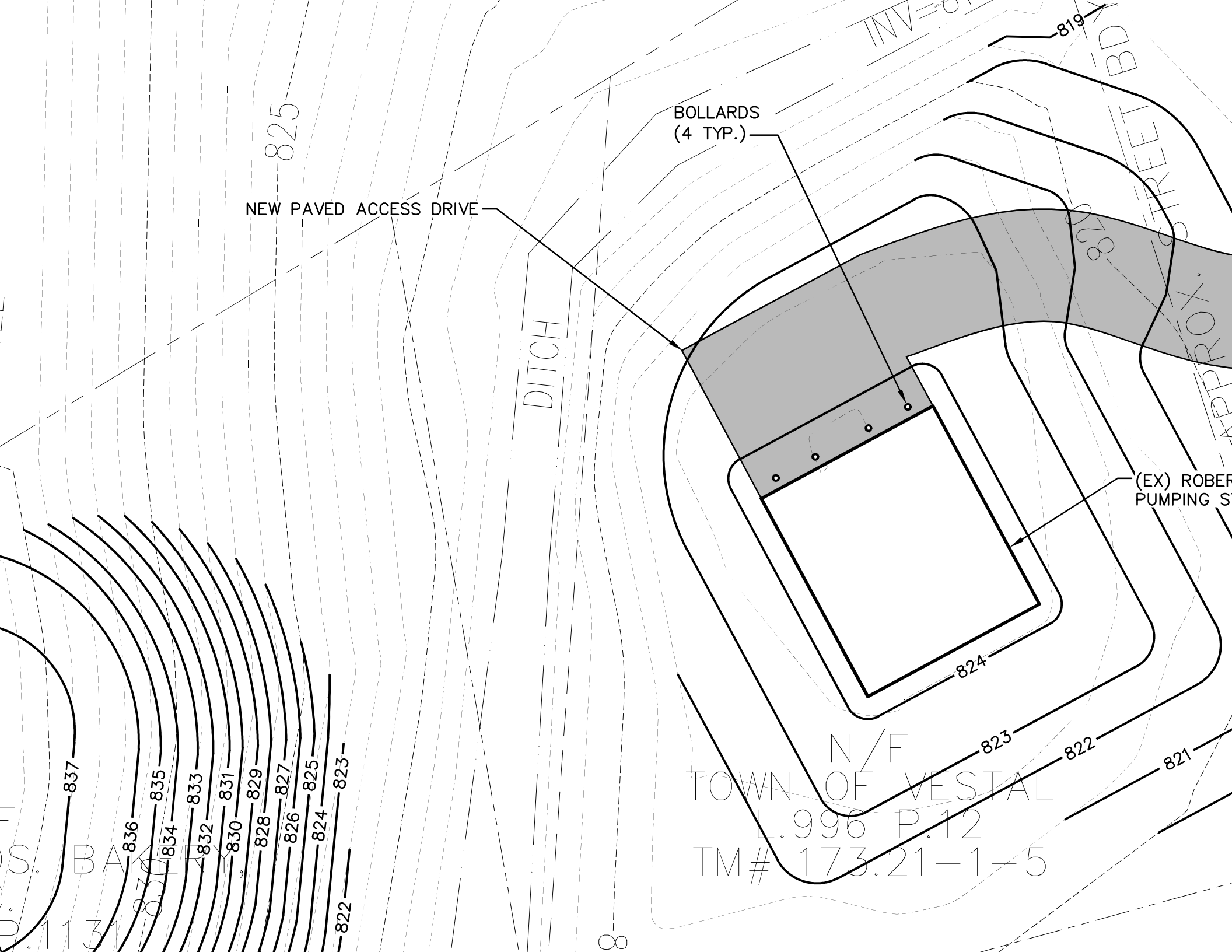

BOLLARDS
(4 TYP.)
NEW PAVED ACCESS DRIVE
DITCH
825
820
819
824
823
822
821
(EX) ROBER
PUMPING ST
N/F
TOWN OF VESTAL
L.996 P.12
TM# 173.21-1-5
837
836
835
834
833
832
831
830
829
828
827
826
825
824
823
822

Attachment 5

U.S. Fish & Wildlife Service

Vestal Robert Street Stormwater Pump Station Upgrade

IPaC Trust Resources Report

Generated November 27, 2016 08:24 AM MST, IPaC v3.0.10

This report is for informational purposes only and should not be used for planning or analyzing project level impacts. For project reviews that require U.S. Fish & Wildlife Service review or concurrence, please return to the IPaC website and request an official species list from the Regulatory Documents page.

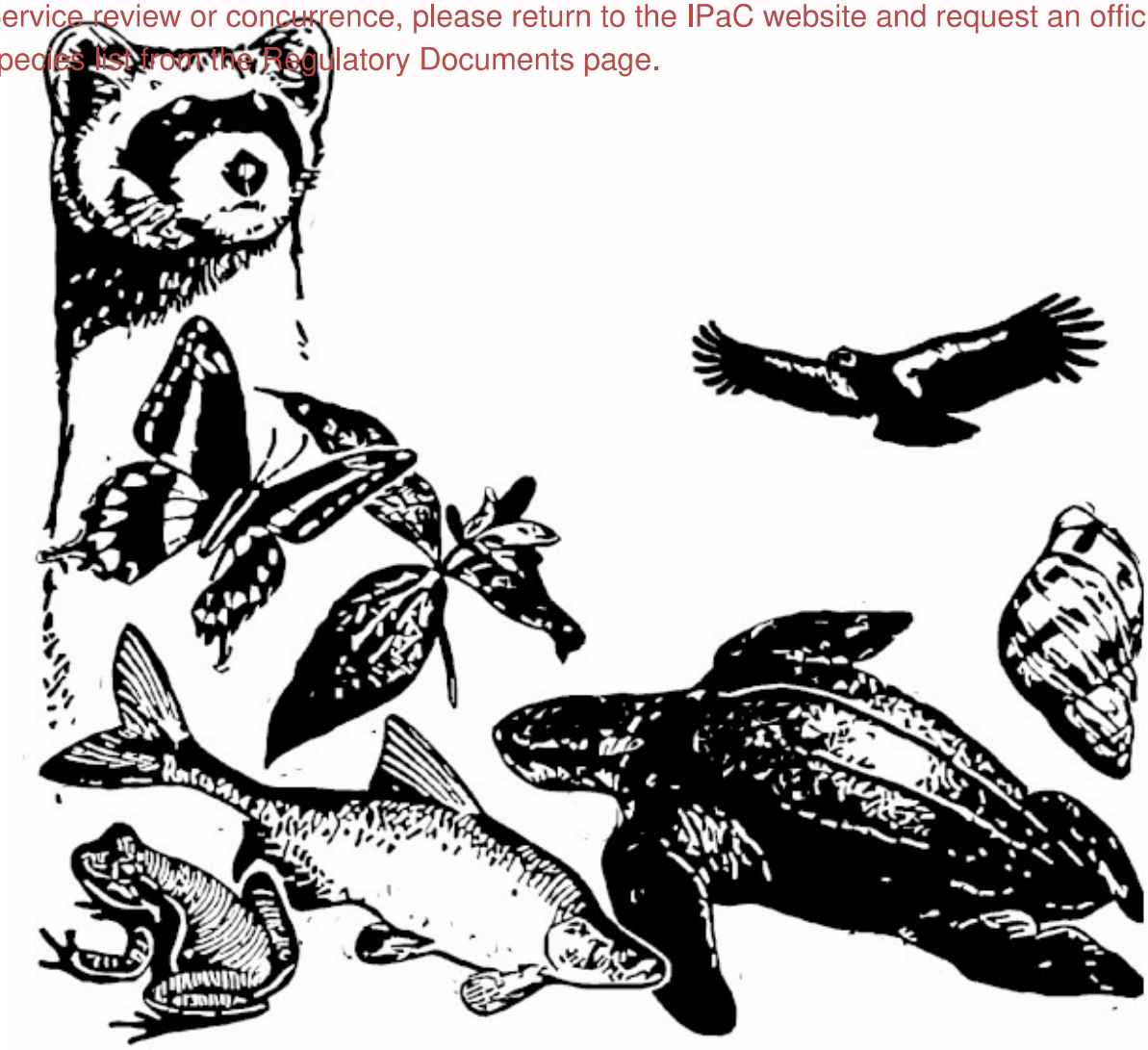

IPaC - Information for Planning and Conservation (https://ecos.fws.gov/ipac/): A project planning tool to help streamline the U.S. Fish & Wildlife Service environmental review process.

Table of Contents

IPaC Trust Resources Report 1
Project Description 1
Endangered Species 2
Migratory Birds 3
Refuges & Hatcheries 5
Wetlands 6

U.S. Fish & Wildlife Service

IPaC Trust Resources Report

NAME

Vestal Robert Street Stormwater Pump Station Upgrade

LOCATION

Broome County, New York

IPAC LINK

https://ecos.fws.gov/ipac/project/LFSOD-S7MXB-EUVKT-NMU3H-FMHYRA

U.S. Fish & Wildlife Service Contact Information

Trust resources in this location are managed by:

New York Ecological Services Field Office
3817 Luker Road
Cortland, NY 13045-9349
(607) 753-9334

Endangered Species

Proposed, candidate, threatened, and endangered species are managed by the Endangered Species Program of the U.S. Fish & Wildlife Service.

This USFWS trust resource report is for informational purposes only and should not be used for planning or analyzing project level impacts.

For project evaluations that require USFWS concurrence/review, please return to the IPaC website and request an official species list from the Regulatory Documents section.

Section 7 of the Endangered Species Act **requires** Federal agencies to "request of the Secretary information whether any species which is listed or proposed to be listed may be present in the area of such proposed action" for any project that is conducted, permitted, funded, or licensed by any Federal agency.

A letter from the local office and a species list which fulfills this requirement can only be obtained by requesting an official species list either from the Regulatory Documents section in IPaC or from the local field office directly.

The list of species below are those that may occur or could potentially be affected by activities in this location:

Mammals

Northern Long-eared Bat Myotis septentrionalis — Threatened

CRITICAL HABITAT

No critical habitat has been designated for this species.

http://ecos.fws.gov/tess_public/profile/speciesProfile.action?spcode=A0JE

Critical Habitats

There are no critical habitats in this location

Migratory Birds

Birds are protected by the Migratory Bird Treaty Act and the Bald and Golden Eagle Protection Act.

Any activity that results in the take of migratory birds or eagles is prohibited unless authorized by the U.S. Fish & Wildlife Service.[1] There are no provisions for allowing the take of migratory birds that are unintentionally killed or injured.

Any person or organization who plans or conducts activities that may result in the take of migratory birds is responsible for complying with the appropriate regulations and implementing appropriate conservation measures.

---

1. 50 C.F.R. Sec. 10.12 and 16 U.S.C. Sec. 668(a)

Additional information can be found using the following links:

- Birds of Conservation Concern
  http://www.fws.gov/birds/management/managed-species/birds-of-conservation-concern.php
- Conservation measures for birds
  http://www.fws.gov/birds/management/project-assessment-tools-and-guidance/conservation-measures.php
- Year-round bird occurrence data
  http://www.birdscanada.org/birdmon/default/datasummaries.jsp

The following species of migratory birds could potentially be affected by activities in this location:

American Bittern Botaurus lentiginosus — Bird of conservation concern
Season: Breeding
http://ecos.fws.gov/tess_public/profile/speciesProfile.action?spcode=B0F3

Bald Eagle Haliaeetus leucocephalus — Bird of conservation concern
Season: Year-round
http://ecos.fws.gov/tess_public/profile/speciesProfile.action?spcode=B008

Black-billed Cuckoo Coccyzus erythropthalmus — Bird of conservation concern
Season: Breeding
http://ecos.fws.gov/tess_public/profile/speciesProfile.action?spcode=B0HI

Blue-winged Warbler Vermivora pinus — Bird of conservation concern
Season: Breeding

Canada Warbler Wilsonia canadensis — Bird of conservation concern
Season: Breeding

Golden-winged Warbler Vermivora chrysoptera — Bird of conservation concern
Season: Breeding
http://ecos.fws.gov/tess_public/profile/speciesProfile.action?spcode=B0G4

Kentucky Warbler Oporornis formosus — Bird of conservation concern
Season: Breeding

Least Bittern Ixobrychus exilis
Season: Breeding
http://ecos.fws.gov/tess_public/profile/speciesProfile.action?spcode=B092

Louisiana Waterthrush Parkesia motacilla — Bird of conservation concern
Season: Breeding

Olive-sided Flycatcher Contopus cooperi — Bird of conservation concern
Season: Breeding
http://ecos.fws.gov/tess_public/profile/speciesProfile.action?spcode=B0AN

Peregrine Falcon Falco peregrinus — Bird of conservation concern
Season: Breeding
http://ecos.fws.gov/tess_public/profile/speciesProfile.action?spcode=B0FU

Pied-billed Grebe Podilymbus podiceps — Bird of conservation concern
Season: Breeding

Prairie Warbler Dendroica discolor — Bird of conservation concern
Season: Breeding

Red-headed Woodpecker Melanerpes erythrocephalus — Bird of conservation concern
Season: Breeding

Short-eared Owl Asio flammeus — Bird of conservation concern
Season: Wintering
http://ecos.fws.gov/tess_public/profile/speciesProfile.action?spcode=B0HD

Willow Flycatcher Empidonax traillii — Bird of conservation concern
Season: Breeding
http://ecos.fws.gov/tess_public/profile/speciesProfile.action?spcode=B0F6

Wood Thrush Hylocichla mustelina — Bird of conservation concern
Season: Breeding

Worm Eating Warbler Helmitheros vermivorum — Bird of conservation concern
Season: Breeding

Wildlife refuges and fish hatcheries

There are no refuges or fish hatcheries in this location

Wetlands in the National Wetlands Inventory

Impacts to NWI wetlands and other aquatic habitats may be subject to regulation under Section 404 of the Clean Water Act, or other State/Federal statutes.

For more information please contact the Regulatory Program of the local U.S. Army Corps of Engineers District.

DATA LIMITATIONS

The Service's objective of mapping wetlands and deepwater habitats is to produce reconnaissance level information on the location, type and size of these resources. The maps are prepared from the analysis of high altitude imagery. Wetlands are identified based on vegetation, visible hydrology and geography. A margin of error is inherent in the use of imagery; thus, detailed on-the-ground inspection of any particular site may result in revision of the wetland boundaries or classification established through image analysis.

The accuracy of image interpretation depends on the quality of the imagery, the experience of the image analysts, the amount and quality of the collateral data and the amount of ground truth verification work conducted. Metadata should be consulted to determine the date of the source imagery used and any mapping problems.

Wetlands or other mapped features may have changed since the date of the imagery or field work. There may be occasional differences in polygon boundaries or classifications between the information depicted on the map and the actual conditions on site.

DATA EXCLUSIONS

Certain wetland habitats are excluded from the National mapping program because of the limitations of aerial imagery as the primary data source used to detect wetlands. These habitats include seagrasses or submerged aquatic vegetation that are found in the intertidal and subtidal zones of estuaries and nearshore coastal waters. Some deepwater reef communities (coral or tuberficid worm reefs) have also been excluded from the inventory. These habitats, because of their depth, go undetected by aerial imagery.

DATA PRECAUTIONS

Federal, state, and local regulatory agencies with jurisdiction over wetlands may define and describe wetlands in a different manner than that used in this inventory. There is no attempt, in either the design or products of this inventory, to define the limits of proprietary jurisdiction of any Federal, state, or local government or to establish the geographical scope of the regulatory programs of government agencies. Persons intending to engage in activities involving modifications within or adjacent to wetland areas should seek the advice of appropriate federal, state, or local agencies concerning specified agency regulatory programs and proprietary jurisdictions that may affect such activities.

There are no wetlands in this location

Attachment 6

United States Department of the Interior

FISH AND WILDLIFE SERVICE
New York Ecological Services Field Office
3817 LUKER ROAD
CORTLAND, NY 13045
PHONE: (607)753-9334 FAX: (607)753-9699
URL: www.fws.gov/northeast/nyfo/es/section7.htm

Consultation Code: 05E1NY00-2017-SLI-0352 November 27, 2016
Event Code: 05E1NY00-2017-E-00859
Project Name: Vestal Robert Street Stormwater Pump Station Upgrade

Subject: List of threatened and endangered species that may occur in your proposed project location, and/or may be affected by your proposed project

To Whom It May Concern:

The enclosed species list identifies threatened, endangered, proposed and candidate species, as well as proposed and final designated critical habitat, that may occur within the boundary of your proposed project and/or may be affected by your proposed project. The species list fulfills the requirements of the U.S. Fish and Wildlife Service (Service) under section 7(c) of the Endangered Species Act (ESA) of 1973, as amended (16 U.S.C. 1531 *et seq.*). This list can also be used to determine whether listed species may be present for projects without federal agency involvement. New information based on updated surveys, changes in the abundance and distribution of species, changed habitat conditions, or other factors could change this list.

Please feel free to contact us if you need more current information or assistance regarding the potential impacts to federally proposed, listed, and candidate species and federally designated and proposed critical habitat. Please note that under 50 CFR 402.12(e) of the regulations implementing section 7 of the ESA, the accuracy of this species list should be verified after 90 days. This verification can be completed formally or informally as desired. The Service recommends that verification be completed by visiting the ECOS-IPaC site at regular intervals during project planning and implementation for updates to species lists and information. An updated list may be requested through the ECOS-IPaC system by completing the same process used to receive the enclosed list. If listed, proposed, or candidate species were identified as potentially occurring in the project area, coordination with our office is encouraged. Information on the steps involved with assessing potential impacts from projects can be found at: http://www.fws.gov/northeast/nyfo/es/section7.htm

Please be aware that bald and golden eagles are protected under the Bald and Golden Eagle Protection Act (16 U.S.C. 668 *et seq.*), and projects affecting these species may require development of an eagle conservation plan (

http://www.fws.gov/windenergy/eagle_guidance.html). Additionally, wind energy projects should follow the Services wind energy guidelines (http://www.fws.gov/windenergy/) for minimizing impacts to migratory birds and bats.

Guidance for minimizing impacts to migratory birds for projects including communications towers (e.g., cellular, digital television, radio, and emergency broadcast) can be found at: http://www.fws.gov/migratorybirds/CurrentBirdIssues/Hazards/towers/towers.htm; http://www.towerkill.com; and http://www.fws.gov/migratorybirds/CurrentBirdIssues/Hazards/towers/comtow.html.

We appreciate your concern for threatened and endangered species. The Service encourages Federal agencies to include conservation of threatened and endangered species into their project planning to further the purposes of the ESA. Please include the Consultation Tracking Number in the header of this letter with any request for consultation or correspondence about your project that you submit to our office.

Attachment

United States Department of Interior
Fish and Wildlife Service

Project name: Vestal Robert Street Stormwater Pump Station Upgrade

Official Species List

Provided by:

New York Ecological Services Field Office
3817 LUKER ROAD
CORTLAND, NY 13045
(607) 753-9334
http://www.fws.gov/northeast/nyfo/es/section7.htm

Consultation Code: 05E1NY00-2017-SLI-0352
Event Code: 05E1NY00-2017-E-00859

Project Type: Federal Grant / Loan Related

Project Name: Vestal Robert Street Stormwater Pump Station Upgrade

Please Note: The FWS office may have modified the Project Name and/or Project Description, so it may be different from what was submitted in your previous request. If the Consultation Code matches, the FWS considers this to be the same project. Contact the office in the 'Provided by' section of your previous Official Species list if you have any questions or concerns.

Project Location Map:

Project Coordinates: MULTIPOLYGON (((-76.06274574995041 42.08414224381234, -76.06257408857346 42.083692359406136, -76.06367111206055 42.08347537861857, -76.0635557770729 42.08392526456335, -76.06276452541351 42.08420793463128, -76.06274574995041 42.08414224381234)))

Project Counties: Broome, NY

Endangered Species Act Species List

There are a total of 1 threatened or endangered species on your species list. Species on this list should be considered in an effects analysis for your project and could include species that exist in another geographic area. For example, certain fish may appear on the species list because a project could affect downstream species. Critical habitats listed under the **Has Critical Habitat** column may or may not lie within your project area. See the **Critical habitats within your project area** section further below for critical habitat that lies within your project. Please contact the designated FWS office if you have questions.

Mammals	Status	Has Critical Habitat	Condition(s)
Northern long-eared Bat *(Myotis septentrionalis)* Population: Wherever found	Threatened		

Critical habitats that lie within your project area

There are no critical habitats within your project area.

Attachment 7

Photos of Project Area

Photo 1: Facing North- Pump house and levee.

Photo 2: Facing Northeast- Pump house and white pine/ arborvitae to be removed.

Photo 3: Facing Southeast- Pumphouse and white pine/ arborvitae to be removed.

Photo 4: Facing East- Pump house and white pine/ arborvitae to be removed.

Photo 5: Facing South- Pump house and white pine/ arborvitae to be removed.

Photo 6: Facing West- Pump house and white pine trees to be removed.

Attachment 8

NEW YORK STATE DEPARTMENT OF ENVIRONMENTAL CONSERVATION
Division of Fish, Wildlife & Marine Resources
New York Natural Heritage Program
625 Broadway, 5th Floor, Albany, New York 12233-4757
Phone: (518) 402-8935 • **Fax:** (518) 402-8925
Website: www.dec.ny.gov

September 02, 2016

Chris Camacho
Tectonic Engineering
70 Pleasant Hill Road
Mountainville, NY 10953

Re: Robert Street Stormwater Pump Station Upgrade
Town/City: Vestal County: Broome

Dear Chris Camacho:

In response to your recent request, we have reviewed the New York Natural Heritage Program database with respect to the above project.

Enclosed is a report of rare or state-listed animals and plants, and significant natural communities that our database indicates occur, or may occur, on your site or in the immediate vicinity of your site.

For most sites, comprehensive field surveys have not been conducted; the enclosed report only includes records from our database. We cannot provide a definitive statement as to the presence or absence of all rare or state-listed species or significant natural communities. Depending on the nature of the project and the conditions at the project site, further information from on-site surveys or other sources may be required to fully assess impacts on biological resources.

Our database is continually growing as records are added and updated. If this proposed project is still under development one year from now, we recommend that you contact us again so that we may update this response with the most current information.

The presence of the plants and animals identified in the enclosed report may result in this project requiring additional review or permit conditions. For further guidance, and for information regarding other permits that may be required under state law for regulated areas or activities (e.g., regulated wetlands), please contact the appropriate NYS DEC Regional Office, Division of Environmental Permits, as listed at www.dec.ny.gov/about/39381.html.

Sincerely,

Andrea Chaloux

Andrea Chaloux
Environmental Review Specialist
New York Natural Heritage Program

1003

The following state-listed animals have been documented in the vicinity of your project site.

The following list includes animals that are listed by NYS as Endangered, Threatened, or Special Concern; and/or that are federally listed or are candidates for federal listing.

For information about any permit considerations for your project, contact the Permits staff at the NYSDEC Region 7 Office. For information about potential impacts of your project on these species, and how to avoid, minimize, or mitigate any impacts, contact the Wildlife Manager.

A listing of Regional Offices is at http://www.dec.ny.gov/about/558.html.

The following species have been documented near the project site, within 0.5 mile.

COMMON NAME	*SCIENTIFIC NAME*	*NY STATE LISTING*	*FEDERAL LISTING*	
Amphibians				
Hellbender	*Cryptobranchus alleganiensis*	Special Concern		12100

This report only includes records from the NY Natural Heritage database. For most sites, comprehensive field surveys have not been conducted, and we cannot provide a definitive statement as to the presence or absence of all rare or state-listed species. Depending on the nature of the project and the conditions at the project site, further information from on-site surveys or other sources may be required to fully assess impacts on biological resources.

If any rare plants or animals are documented during site visits, we request that information on the observations be provided to the New York Natural Heritage Program so that we may update our database.

Information about many of the listed animals in New York, including habitat, biology, identification, conservation, and management, are available online in Natural Heritage's Conservation Guides at www.guides.nynhp.org, and from NYSDEC at www.dec.ny.gov/animals/7494.html.

The following rare plants, rare animals, and significant natural communities have been documented in the vicinity of your project site.

We recommend that potential onsite and offsite impacts of the proposed project on these species or communities be addressed as part of any environmental assessment or review conducted as part of the planning, permitting and approval process, such as reviews conducted under SEQR. Field surveys of the project site may be necessary to determine the status of a species at the site, particularly for sites that are currently undeveloped and may still contain suitable habitat. Final requirements of the project to avoid, minimize, or mitigate potential impacts are determined by the lead permitting agency or the government body approving the project.

The following animals, while not listed by New York State as Endangered or Threatened, are of conservation concern to the state, and are considered rare by the New York Natural Heritage Program.

COMMON NAME	*SCIENTIFIC NAME*	*NY STATE LISTING*	*HERITAGE CONSERVATION STATUS*
Freshwater Mussels			
Yellow Lampmussel	*Lampsilis cariosa*	Unlisted	Vulnerable in NYS
Susquehanna River Endicott, 2008-pre.			13375

This report only includes records from the NY Natural Heritage database. For most sites, comprehensive field surveys have not been conducted, and we cannot provide a definitive statement as to the presence or absence of all rare or state-listed species. Depending on the nature of the project and the conditions at the project site, further information from on-site surveys or other sources may be required to fully assess impacts on biological resources.

If any rare plants or animals are documented during site visits, we request that information on the observations be provided to the New York Natural Heritage Program so that we may update our database.

Information about many of the rare animals and plants in New York, including habitat, biology, identification, conservation, and management, are available online in Natural Heritage's Conservation Guides at www.guides.nynhp.org, from NatureServe Explorer at www.natureserve.org/explorer, and from USDA's Plants Database at http://plants.usda.gov/index.html (for plants).

Information about many of the natural community types in New York, including identification, dominant and characteristic vegetation, distribution, conservation, and management, is available online in Natural Heritage's Conservation Guides at www.guides.nynhp.org. For descriptions of all community types, go to www.dec.ny.gov/animals/97703.html for Ecological Communities of New York State.

United States Department of the Interior

FISH AND WILDLIFE SERVICE
New York Ecological Services Field Office
3817 LUKER ROAD
CORTLAND, NY 13045
PHONE: (607)753-9334 FAX: (607)753-9699
URL: www.fws.gov/northeast/nyfo/es/section7.htm

Consultation Code: 05E1NY00-2017-SLI-0352 November 27, 2016
Event Code: 05E1NY00-2017-E-00859
Project Name: Vestal Robert Street Stormwater Pump Station Upgrade

Subject: List of threatened and endangered species that may occur in your proposed project location, and/or may be affected by your proposed project

To Whom It May Concern:

The enclosed species list identifies threatened, endangered, proposed and candidate species, as well as proposed and final designated critical habitat, that may occur within the boundary of your proposed project and/or may be affected by your proposed project. The species list fulfills the requirements of the U.S. Fish and Wildlife Service (Service) under section 7(c) of the Endangered Species Act (ESA) of 1973, as amended (16 U.S.C. 1531 *et seq.*). This list can also be used to determine whether listed species may be present for projects without federal agency involvement. New information based on updated surveys, changes in the abundance and distribution of species, changed habitat conditions, or other factors could change this list.

Please feel free to contact us if you need more current information or assistance regarding the potential impacts to federally proposed, listed, and candidate species and federally designated and proposed critical habitat. Please note that under 50 CFR 402.12(e) of the regulations implementing section 7 of the ESA, the accuracy of this species list should be verified after 90 days. This verification can be completed formally or informally as desired. The Service recommends that verification be completed by visiting the ECOS-IPaC site at regular intervals during project planning and implementation for updates to species lists and information. An updated list may be requested through the ECOS-IPaC system by completing the same process used to receive the enclosed list. If listed, proposed, or candidate species were identified as potentially occurring in the project area, coordination with our office is encouraged. Information on the steps involved with assessing potential impacts from projects can be found at: http://www.fws.gov/northeast/nyfo/es/section7.htm

Please be aware that bald and golden eagles are protected under the Bald and Golden Eagle Protection Act (16 U.S.C. 668 *et seq.*), and projects affecting these species may require development of an eagle conservation plan (

http://www.fws.gov/windenergy/eagle_guidance.html). Additionally, wind energy projects should follow the Services wind energy guidelines (http://www.fws.gov/windenergy/) for minimizing impacts to migratory birds and bats.

Guidance for minimizing impacts to migratory birds for projects including communications towers (e.g., cellular, digital television, radio, and emergency broadcast) can be found at: http://www.fws.gov/migratorybirds/CurrentBirdIssues/Hazards/towers/towers.htm; http://www.towerkill.com; and http://www.fws.gov/migratorybirds/CurrentBirdIssues/Hazards/towers/comtow.html.

We appreciate your concern for threatened and endangered species. The Service encourages Federal agencies to include conservation of threatened and endangered species into their project planning to further the purposes of the ESA. Please include the Consultation Tracking Number in the header of this letter with any request for consultation or correspondence about your project that you submit to our office.

Attachment

United States Department of Interior
Fish and Wildlife Service

Project name: Vestal Robert Street Stormwater Pump Station Upgrade

Official Species List

Provided by:

New York Ecological Services Field Office
3817 LUKER ROAD
CORTLAND, NY 13045
(607) 753-9334
http://www.fws.gov/northeast/nyfo/es/section7.htm

Consultation Code: 05E1NY00-2017-SLI-0352
Event Code: 05E1NY00-2017-E-00859

Project Type: Federal Grant / Loan Related

Project Name: Vestal Robert Street Stormwater Pump Station Upgrade

Please Note: The FWS office may have modified the Project Name and/or Project Description, so it may be different from what was submitted in your previous request. If the Consultation Code matches, the FWS considers this to be the same project. Contact the office in the 'Provided by' section of your previous Official Species list if you have any questions or concerns.

Project Location Map:

Project Coordinates: MULTIPOLYGON (((-76.06274574995041 42.08414224381234, -76.06257408857346 42.083692359406136, -76.06367111206055 42.08347537861857, -76.0635557770729 42.08392526456335, -76.06276452541351 42.08420793463128, -76.06274574995041 42.08414224381234)))

Project Counties: Broome, NY

Endangered Species Act Species List

There are a total of 1 threatened or endangered species on your species list. Species on this list should be considered in an effects analysis for your project and could include species that exist in another geographic area. For example, certain fish may appear on the species list because a project could affect downstream species. Critical habitats listed under the **Has Critical Habitat** column may or may not lie within your project area. See the **Critical habitats within your project area** section further below for critical habitat that lies within your project. Please contact the designated FWS office if you have questions.

Mammals	Status	Has Critical Habitat	Condition(s)
Northern long-eared Bat *(Myotis septentrionalis)* Population: Wherever found	Threatened		

Critical habitats that lie within your project area

There are no critical habitats within your project area.

U.S. Fish & Wildlife Service

Vestal Robert Street Stormwater Pump Station Upgrade

IPaC Trust Resources Report

Generated November 27, 2016 08:24 AM MST, IPaC v3.0.10

This report is for informational purposes only and should not be used for planning or analyzing project level impacts. For project reviews that require U.S. Fish & Wildlife Service review or concurrence, please return to the IPaC website and request an official species list from the Regulatory Documents page.

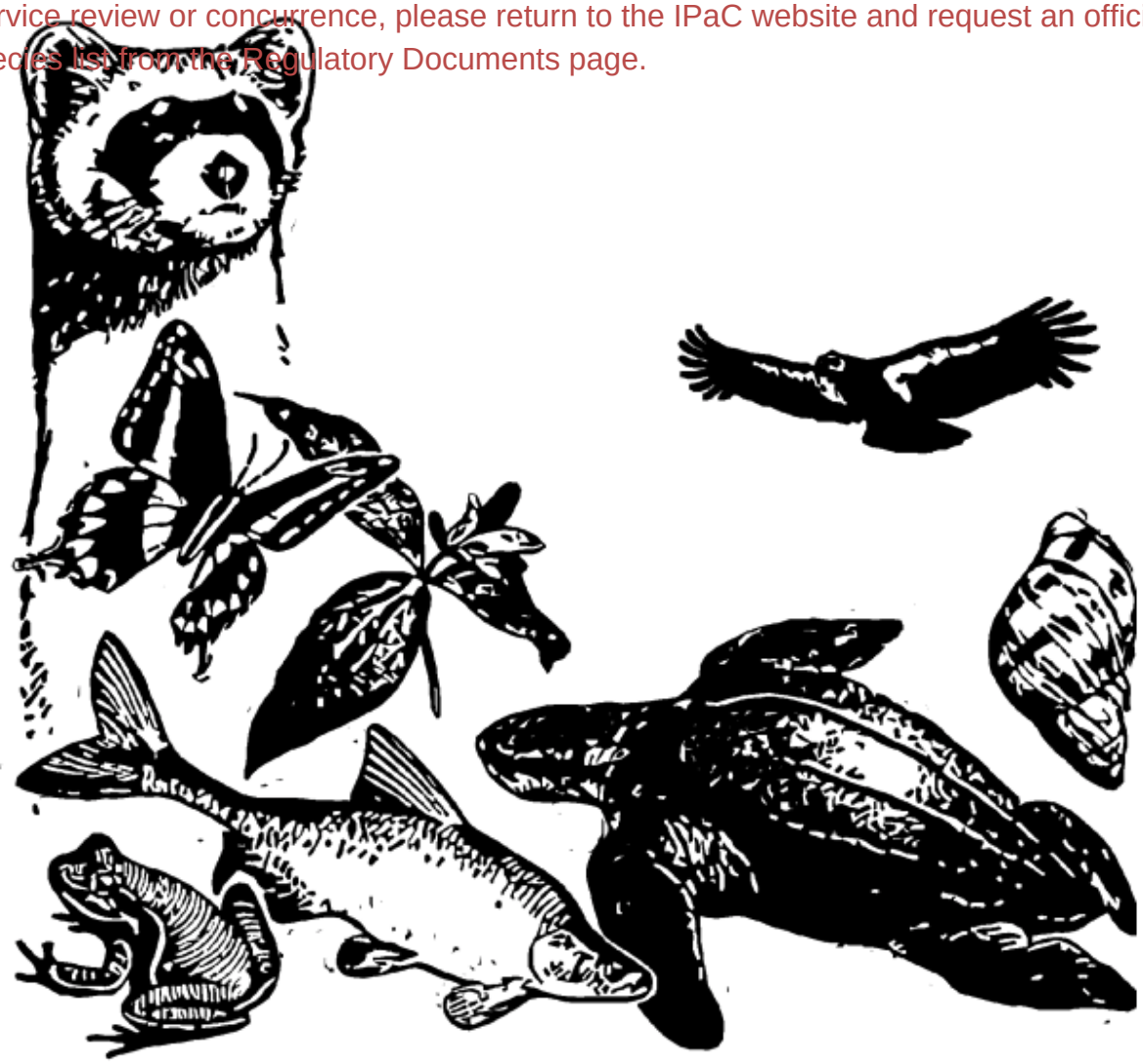

IPaC - Information for Planning and Conservation (https://ecos.fws.gov/ipac/): A project planning tool to help streamline the U.S. Fish & Wildlife Service environmental review process.

Table of Contents

IPaC Trust Resources Report 1
Project Description 1
Endangered Species 2
Migratory Birds 3
Refuges & Hatcheries 5
Wetlands 6

U.S. Fish & Wildlife Service

IPaC Trust Resources Report

NAME

Vestal Robert Street Stormwater Pump Station Upgrade

LOCATION

Broome County, New York

IPAC LINK

https://ecos.fws.gov/ipac/project/LFSOD-S7MXB-EUVKT-NMU3H-FMHYRA

U.S. Fish & Wildlife Service Contact Information

Trust resources in this location are managed by:

New York Ecological Services Field Office
3817 Luker Road
Cortland, NY 13045-9349
(607) 753-9334

Endangered Species

Proposed, candidate, threatened, and endangered species are managed by the Endangered Species Program of the U.S. Fish & Wildlife Service.

This USFWS trust resource report is for informational purposes only and should not be used for planning or analyzing project level impacts.

For project evaluations that require USFWS concurrence/review, please return to the IPaC website and request an official species list from the Regulatory Documents section.

Section 7 of the Endangered Species Act **requires** Federal agencies to "request of the Secretary information whether any species which is listed or proposed to be listed may be present in the area of such proposed action" for any project that is conducted, permitted, funded, or licensed by any Federal agency.

A letter from the local office and a species list which fulfills this requirement can only be obtained by requesting an official species list either from the Regulatory Documents section in IPaC or from the local field office directly.

The list of species below are those that may occur or could potentially be affected by activities in this location:

Mammals

Northern Long-eared Bat Myotis septentrionalis — Threatened

CRITICAL HABITAT

No critical habitat has been designated for this species.

http://ecos.fws.gov/tess_public/profile/speciesProfile.action?spcode=A0JE

Critical Habitats

There are no critical habitats in this location

Migratory Birds

Birds are protected by the Migratory Bird Treaty Act and the Bald and Golden Eagle Protection Act.

Any activity that results in the take of migratory birds or eagles is prohibited unless authorized by the U.S. Fish & Wildlife Service.[1] There are no provisions for allowing the take of migratory birds that are unintentionally killed or injured.

Any person or organization who plans or conducts activities that may result in the take of migratory birds is responsible for complying with the appropriate regulations and implementing appropriate conservation measures.

---

1. 50 C.F.R. Sec. 10.12 and 16 U.S.C. Sec. 668(a)

Additional information can be found using the following links:

- Birds of Conservation Concern
  http://www.fws.gov/birds/management/managed-species/birds-of-conservation-concern.php
- Conservation measures for birds
  http://www.fws.gov/birds/management/project-assessment-tools-and-guidance/conservation-measures.php
- Year-round bird occurrence data
  http://www.birdscanada.org/birdmon/default/datasummaries.jsp

The following species of migratory birds could potentially be affected by activities in this location:

American Bittern Botaurus lentiginosus — Bird of conservation concern
Season: Breeding
http://ecos.fws.gov/tess_public/profile/speciesProfile.action?spcode=B0F3

Bald Eagle Haliaeetus leucocephalus — Bird of conservation concern
Season: Year-round
http://ecos.fws.gov/tess_public/profile/speciesProfile.action?spcode=B008

Black-billed Cuckoo Coccyzus erythropthalmus — Bird of conservation concern
Season: Breeding
http://ecos.fws.gov/tess_public/profile/speciesProfile.action?spcode=B0HI

Blue-winged Warbler Vermivora pinus — Bird of conservation concern
Season: Breeding

Canada Warbler Wilsonia canadensis — Bird of conservation concern
Season: Breeding

Golden-winged Warbler Vermivora chrysoptera — Bird of conservation concern
Season: Breeding
http://ecos.fws.gov/tess_public/profile/speciesProfile.action?spcode=B0G4

Kentucky Warbler Oporornis formosus — Bird of conservation concern
Season: Breeding

Least Bittern Ixobrychus exilis
Season: Breeding
http://ecos.fws.gov/tess_public/profile/speciesProfile.action?spcode=B092

Louisiana Waterthrush Parkesia motacilla — Bird of conservation concern
Season: Breeding

Olive-sided Flycatcher Contopus cooperi — Bird of conservation concern
Season: Breeding
http://ecos.fws.gov/tess_public/profile/speciesProfile.action?spcode=B0AN

Peregrine Falcon Falco peregrinus — Bird of conservation concern
Season: Breeding
http://ecos.fws.gov/tess_public/profile/speciesProfile.action?spcode=B0FU

Pied-billed Grebe Podilymbus podiceps — Bird of conservation concern
Season: Breeding

Prairie Warbler Dendroica discolor — Bird of conservation concern
Season: Breeding

Red-headed Woodpecker Melanerpes erythrocephalus — Bird of conservation concern
Season: Breeding

Short-eared Owl Asio flammeus — Bird of conservation concern
Season: Wintering
http://ecos.fws.gov/tess_public/profile/speciesProfile.action?spcode=B0HD

Willow Flycatcher Empidonax traillii — Bird of conservation concern
Season: Breeding
http://ecos.fws.gov/tess_public/profile/speciesProfile.action?spcode=B0F6

Wood Thrush Hylocichla mustelina — Bird of conservation concern
Season: Breeding

Worm Eating Warbler Helmitheros vermivorum — Bird of conservation concern
Season: Breeding

Wildlife refuges and fish hatcheries

There are no refuges or fish hatcheries in this location

Wetlands in the National Wetlands Inventory

Impacts to NWI wetlands and other aquatic habitats may be subject to regulation under Section 404 of the Clean Water Act, or other State/Federal statutes.

For more information please contact the Regulatory Program of the local U.S. Army Corps of Engineers District.

DATA LIMITATIONS

The Service's objective of mapping wetlands and deepwater habitats is to produce reconnaissance level information on the location, type and size of these resources. The maps are prepared from the analysis of high altitude imagery. Wetlands are identified based on vegetation, visible hydrology and geography. A margin of error is inherent in the use of imagery; thus, detailed on-the-ground inspection of any particular site may result in revision of the wetland boundaries or classification established through image analysis.

The accuracy of image interpretation depends on the quality of the imagery, the experience of the image analysts, the amount and quality of the collateral data and the amount of ground truth verification work conducted. Metadata should be consulted to determine the date of the source imagery used and any mapping problems.

Wetlands or other mapped features may have changed since the date of the imagery or field work. There may be occasional differences in polygon boundaries or classifications between the information depicted on the map and the actual conditions on site.

DATA EXCLUSIONS

Certain wetland habitats are excluded from the National mapping program because of the limitations of aerial imagery as the primary data source used to detect wetlands. These habitats include seagrasses or submerged aquatic vegetation that are found in the intertidal and subtidal zones of estuaries and nearshore coastal waters. Some deepwater reef communities (coral or tuberficid worm reefs) have also been excluded from the inventory. These habitats, because of their depth, go undetected by aerial imagery.

DATA PRECAUTIONS

Federal, state, and local regulatory agencies with jurisdiction over wetlands may define and describe wetlands in a different manner than that used in this inventory. There is no attempt, in either the design or products of this inventory, to define the limits of proprietary jurisdiction of any Federal, state, or local government or to establish the geographical scope of the regulatory programs of government agencies. Persons intending to engage in activities involving modifications within or adjacent to wetland areas should seek the advice of appropriate federal, state, or local agencies concerning specified agency regulatory programs and proprietary jurisdictions that may affect such activities.

There are no wetlands in this location

Attachment 7

NRCS Soil ResourceMap
and FarmlandClassification Map

United States Department of Agriculture

NRCS

Natural Resources Conservation Service

A product of the National Cooperative Soil Survey, a joint effort of the United States Department of Agriculture and other Federal agencies, State agencies including the Agricultural Experiment Stations, and local participants

Custom Soil Resource Report for

Broome County, New York

ROBERT STREET STORMWATER PUMP STATION UPGRADE

November 23, 2016

Preface

Soil surveys contain information that affects land use planning in survey areas. They highlight soil limitations that affect various land uses and provide information about the properties of the soils in the survey areas. Soil surveys are designed for many different users, including farmers, ranchers, foresters, agronomists, urban planners, community officials, engineers, developers, builders, and home buyers. Also, conservationists, teachers, students, and specialists in recreation, waste disposal, and pollution control can use the surveys to help them understand, protect, or enhance the environment.

Various land use regulations of Federal, State, and local governments may impose special restrictions on land use or land treatment. Soil surveys identify soil properties that are used in making various land use or land treatment decisions. The information is intended to help the land users identify and reduce the effects of soil limitations on various land uses. The landowner or user is responsible for identifying and complying with existing laws and regulations.

Although soil survey information can be used for general farm, local, and wider area planning, onsite investigation is needed to supplement this information in some cases. Examples include soil quality assessments (http://www.nrcs.usda.gov/wps/portal/nrcs/main/soils/health/) and certain conservation and engineering applications. For more detailed information, contact your local USDA Service Center (http://offices.sc.egov.usda.gov/locator/app?agency=nrcs) or your NRCS State Soil Scientist (http://www.nrcs.usda.gov/wps/portal/nrcs/detail/soils/contactus/?cid=nrcs142p2_053951).

Great differences in soil properties can occur within short distances. Some soils are seasonally wet or subject to flooding. Some are too unstable to be used as a foundation for buildings or roads. Clayey or wet soils are poorly suited to use as septic tank absorption fields. A high water table makes a soil poorly suited to basements or underground installations.

The National Cooperative Soil Survey is a joint effort of the United States Department of Agriculture and other Federal agencies, State agencies including the Agricultural Experiment Stations, and local agencies. The Natural Resources Conservation Service (NRCS) has leadership for the Federal part of the National Cooperative Soil Survey.

Information about soils is updated periodically. Updated information is available through the NRCS Web Soil Survey, the site for official soil survey information.

The U.S. Department of Agriculture (USDA) prohibits discrimination in all its programs and activities on the basis of race, color, national origin, age, disability, and where applicable, sex, marital status, familial status, parental status, religion, sexual orientation, genetic information, political beliefs, reprisal, or because all or a part of an individual's income is derived from any public assistance program. (Not all prohibited bases apply to all programs.) Persons with disabilities who require alternative means

for communication of program information (Braille, large print, audiotape, etc.) should contact USDA's TARGET Center at (202) 720-2600 (voice and TDD). To file a complaint of discrimination, write to USDA, Director, Office of Civil Rights, 1400 Independence Avenue, S.W., Washington, D.C. 20250-9410 or call (800) 795-3272 (voice) or (202) 720-6382 (TDD). USDA is an equal opportunity provider and employer.

Contents

Preface.....2
How Soil Surveys Are Made.....5
Soil Map.....7
Soil Map.....8
Legend.....9
Map Unit Legend.....10
Map Unit Descriptions.....10
Broome County, New York.....12
Ad—Alluvial land.....12
Cy—Cut and fill lands, silty materials.....13
Soil Information for Cropland.....16
Suitabilities and Limitations for Use.....16
Land Classifications.....16
Farmland Classification (ROBERT STREET STORMWATER PUMP STATION UPGRADE).....16
References.....21

How Soil Surveys Are Made

Soil surveys are made to provide information about the soils and miscellaneous areas in a specific area. They include a description of the soils and miscellaneous areas and their location on the landscape and tables that show soil properties and limitations affecting various uses. Soil scientists observed the steepness, length, and shape of the slopes; the general pattern of drainage; the kinds of crops and native plants; and the kinds of bedrock. They observed and described many soil profiles. A soil profile is the sequence of natural layers, or horizons, in a soil. The profile extends from the surface down into the unconsolidated material in which the soil formed or from the surface down to bedrock. The unconsolidated material is devoid of roots and other living organisms and has not been changed by other biological activity.

Currently, soils are mapped according to the boundaries of major land resource areas (MLRAs). MLRAs are geographically associated land resource units that share common characteristics related to physiography, geology, climate, water resources, soils, biological resources, and land uses (USDA, 2006). Soil survey areas typically consist of parts of one or more MLRA.

The soils and miscellaneous areas in a survey area occur in an orderly pattern that is related to the geology, landforms, relief, climate, and natural vegetation of the area. Each kind of soil and miscellaneous area is associated with a particular kind of landform or with a segment of the landform. By observing the soils and miscellaneous areas in the survey area and relating their position to specific segments of the landform, a soil scientist develops a concept, or model, of how they were formed. Thus, during mapping, this model enables the soil scientist to predict with a considerable degree of accuracy the kind of soil or miscellaneous area at a specific location on the landscape.

Commonly, individual soils on the landscape merge into one another as their characteristics gradually change. To construct an accurate soil map, however, soil scientists must determine the boundaries between the soils. They can observe only a limited number of soil profiles. Nevertheless, these observations, supplemented by an understanding of the soil-vegetation-landscape relationship, are sufficient to verify predictions of the kinds of soil in an area and to determine the boundaries.

Soil scientists recorded the characteristics of the soil profiles that they studied. They noted soil color, texture, size and shape of soil aggregates, kind and amount of rock fragments, distribution of plant roots, reaction, and other features that enable them to identify soils. After describing the soils in the survey area and determining their properties, the soil scientists assigned the soils to taxonomic classes (units). Taxonomic classes are concepts. Each taxonomic class has a set of soil characteristics with precisely defined limits. The classes are used as a basis for comparison to classify soils systematically. Soil taxonomy, the system of taxonomic classification used in the United States, is based mainly on the kind and character of soil properties and the arrangement of horizons within the profile. After the soil scientists classified and named the soils in the survey area, they compared the

individual soils with similar soils in the same taxonomic class in other areas so that they could confirm data and assemble additional data based on experience and research.

The objective of soil mapping is not to delineate pure map unit components; the objective is to separate the landscape into landforms or landform segments that have similar use and management requirements. Each map unit is defined by a unique combination of soil components and/or miscellaneous areas in predictable proportions. Some components may be highly contrasting to the other components of the map unit. The presence of minor components in a map unit in no way diminishes the usefulness or accuracy of the data. The delineation of such landforms and landform segments on the map provides sufficient information for the development of resource plans. If intensive use of small areas is planned, onsite investigation is needed to define and locate the soils and miscellaneous areas.

Soil scientists make many field observations in the process of producing a soil map. The frequency of observation is dependent upon several factors, including scale of mapping, intensity of mapping, design of map units, complexity of the landscape, and experience of the soil scientist. Observations are made to test and refine the soil-landscape model and predictions and to verify the classification of the soils at specific locations. Once the soil-landscape model is refined, a significantly smaller number of measurements of individual soil properties are made and recorded. These measurements may include field measurements, such as those for color, depth to bedrock, and texture, and laboratory measurements, such as those for content of sand, silt, clay, salt, and other components. Properties of each soil typically vary from one point to another across the landscape.

Observations for map unit components are aggregated to develop ranges of characteristics for the components. The aggregated values are presented. Direct measurements do not exist for every property presented for every map unit component. Values for some properties are estimated from combinations of other properties.

While a soil survey is in progress, samples of some of the soils in the area generally are collected for laboratory analyses and for engineering tests. Soil scientists interpret the data from these analyses and tests as well as the field-observed characteristics and the soil properties to determine the expected behavior of the soils under different uses. Interpretations for all of the soils are field tested through observation of the soils in different uses and under different levels of management. Some interpretations are modified to fit local conditions, and some new interpretations are developed to meet local needs. Data are assembled from other sources, such as research information, production records, and field experience of specialists. For example, data on crop yields under defined levels of management are assembled from farm records and from field or plot experiments on the same kinds of soil.

Predictions about soil behavior are based not only on soil properties but also on such variables as climate and biological activity. Soil conditions are predictable over long periods of time, but they are not predictable from year to year. For example, soil scientists can predict with a fairly high degree of accuracy that a given soil will have a high water table within certain depths in most years, but they cannot predict that a high water table will always be at a specific level in the soil on a specific date.

After soil scientists located and identified the significant natural bodies of soil in the survey area, they drew the boundaries of these bodies on aerial photographs and identified each as a specific map unit. Aerial photographs show trees, buildings, fields, roads, and rivers, all of which help in locating boundaries accurately.

Soil Map

The soil map section includes the soil map for the defined area of interest, a list of soil map units on the map and extent of each map unit, and cartographic symbols displayed on the map. Also presented are various metadata about data used to produce the map, and a description of each soil map unit.

Custom Soil Resource Report
Soil Map

MAP LEGEND

Area of Interest (AOI)

- Area of Interest (AOI)

Soils

- Soil Map Unit Polygons
- Soil Map Unit Lines
- Soil Map Unit Points

Special Point Features

- Blowout
- Borrow Pit
- Clay Spot
- Closed Depression
- Gravel Pit
- Gravelly Spot
- Landfill
- Lava Flow
- Marsh or swamp
- Mine or Quarry
- Miscellaneous Water
- Perennial Water
- Rock Outcrop
- Saline Spot
- Sandy Spot
- Severely Eroded Spot
- Sinkhole
- Slide or Slip
- Sodic Spot
- Spoil Area
- Stony Spot
- Very Stony Spot
- Wet Spot
- Other
- Special Line Features

Water Features

- Streams and Canals

Transportation

- Rails
- Interstate Highways
- US Routes
- Major Roads
- Local Roads

Background

- Aerial Photography

MAP INFORMATION

The soil surveys that comprise your AOI were mapped at 1:15,800.

Warning: Soil Map may not be valid at this scale.

Enlargement of maps beyond the scale of mapping can cause misunderstanding of the detail of mapping and accuracy of soil line placement. The maps do not show the small areas of contrasting soils that could have been shown at a more detailed scale.

Please rely on the bar scale on each map sheet for map measurements.

Source of Map: Natural Resources Conservation Service
Web Soil Survey URL: http://websoilsurvey.nrcs.usda.gov
Coordinate System: Web Mercator (EPSG:3857)

Maps from the Web Soil Survey are based on the Web Mercator projection, which preserves direction and shape but distorts distance and area. A projection that preserves area, such as the Albers equal-area conic projection, should be used if more accurate calculations of distance or area are required.

This product is generated from the USDA-NRCS certified data as of the version date(s) listed below.

Soil Survey Area: Broome County, New York
Survey Area Data: Version 14, Sep 23, 2016

Soil map units are labeled (as space allows) for map scales 1:50,000 or larger.

Date(s) aerial images were photographed: Jun 2, 2010—Oct 8, 2010

The orthophoto or other base map on which the soil lines were compiled and digitized probably differs from the background imagery displayed on these maps. As a result, some minor shifting of map unit boundaries may be evident.

Map Unit Legend

Broome County, New York (NY007)			
Map Unit Symbol	**Map Unit Name**	**Acres in AOI**	**Percent of AOI**
Ad	Alluvial land	0.0	8.3%
Cy	Cut and fill lands, silty materials	0.3	91.7%
Totals for Area of Interest		**0.4**	**100.0%**

Map Unit Descriptions

The map units delineated on the detailed soil maps in a soil survey represent the soils or miscellaneous areas in the survey area. The map unit descriptions, along with the maps, can be used to determine the composition and properties of a unit.

A map unit delineation on a soil map represents an area dominated by one or more major kinds of soil or miscellaneous areas. A map unit is identified and named according to the taxonomic classification of the dominant soils. Within a taxonomic class there are precisely defined limits for the properties of the soils. On the landscape, however, the soils are natural phenomena, and they have the characteristic variability of all natural phenomena. Thus, the range of some observed properties may extend beyond the limits defined for a taxonomic class. Areas of soils of a single taxonomic class rarely, if ever, can be mapped without including areas of other taxonomic classes. Consequently, every map unit is made up of the soils or miscellaneous areas for which it is named and some minor components that belong to taxonomic classes other than those of the major soils.

Most minor soils have properties similar to those of the dominant soil or soils in the map unit, and thus they do not affect use and management. These are called noncontrasting, or similar, components. They may or may not be mentioned in a particular map unit description. Other minor components, however, have properties and behavioral characteristics divergent enough to affect use or to require different management. These are called contrasting, or dissimilar, components. They generally are in small areas and could not be mapped separately because of the scale used. Some small areas of strongly contrasting soils or miscellaneous areas are identified by a special symbol on the maps. If included in the database for a given area, the contrasting minor components are identified in the map unit descriptions along with some characteristics of each. A few areas of minor components may not have been observed, and consequently they are not mentioned in the descriptions, especially where the pattern was so complex that it was impractical to make enough observations to identify all the soils and miscellaneous areas on the landscape.

The presence of minor components in a map unit in no way diminishes the usefulness or accuracy of the data. The objective of mapping is not to delineate pure taxonomic classes but rather to separate the landscape into landforms or landform segments that have similar use and management requirements. The delineation of such segments on the map provides sufficient information for the development of resource plans. If intensive use of small areas is planned, however, onsite investigation is needed to define and locate the soils and miscellaneous areas.

An identifying symbol precedes the map unit name in the map unit descriptions. Each description includes general facts about the unit and gives important soil properties and qualities.

Soils that have profiles that are almost alike make up a *soil series*. Except for differences in texture of the surface layer, all the soils of a series have major horizons that are similar in composition, thickness, and arrangement.

Soils of one series can differ in texture of the surface layer, slope, stoniness, salinity, degree of erosion, and other characteristics that affect their use. On the basis of such differences, a soil series is divided into *soil phases*. Most of the areas shown on the detailed soil maps are phases of soil series. The name of a soil phase commonly indicates a feature that affects use or management. For example, Alpha silt loam, 0 to 2 percent slopes, is a phase of the Alpha series.

Some map units are made up of two or more major soils or miscellaneous areas. These map units are complexes, associations, or undifferentiated groups.

A *complex* consists of two or more soils or miscellaneous areas in such an intricate pattern or in such small areas that they cannot be shown separately on the maps. The pattern and proportion of the soils or miscellaneous areas are somewhat similar in all areas. Alpha-Beta complex, 0 to 6 percent slopes, is an example.

An *association* is made up of two or more geographically associated soils or miscellaneous areas that are shown as one unit on the maps. Because of present or anticipated uses of the map units in the survey area, it was not considered practical or necessary to map the soils or miscellaneous areas separately. The pattern and relative proportion of the soils or miscellaneous areas are somewhat similar. Alpha-Beta association, 0 to 2 percent slopes, is an example.

An *undifferentiated group* is made up of two or more soils or miscellaneous areas that could be mapped individually but are mapped as one unit because similar interpretations can be made for use and management. The pattern and proportion of the soils or miscellaneous areas in a mapped area are not uniform. An area can be made up of only one of the major soils or miscellaneous areas, or it can be made up of all of them. Alpha and Beta soils, 0 to 2 percent slopes, is an example.

Some surveys include *miscellaneous areas*. Such areas have little or no soil material and support little or no vegetation. Rock outcrop is an example.

Broome County, New York

Ad—Alluvial land

Map Unit Setting

National map unit symbol: 9pww
Elevation: 100 to 3,000 feet
Mean annual precipitation: 36 to 45 inches
Mean annual air temperature: 43 to 48 degrees F
Frost-free period: 110 to 180 days
Farmland classification: Not prime farmland

Map Unit Composition

Fluvaquents and similar soils: 50 percent
Udifluvents and similar soils: 30 percent
Minor components: 20 percent
Estimates are based on observations, descriptions, and transects of the mapunit.

Description of Fluvaquents

Setting

Landform: Flood plains
Landform position (two-dimensional): Toeslope
Landform position (three-dimensional): Dip
Down-slope shape: Concave
Across-slope shape: Concave
Parent material: Alluvium with highly variable texture

Typical profile

H1 - 0 to 5 inches: gravelly silt loam
H2 - 5 to 70 inches: gravelly silt loam

Properties and qualities

Slope: 0 to 3 percent
Depth to restrictive feature: More than 80 inches
Natural drainage class: Poorly drained
Capacity of the most limiting layer to transmit water (Ksat): Moderately low to very high (0.06 to 19.98 in/hr)
Depth to water table: About 0 to 12 inches
Frequency of flooding: Frequent
Frequency of ponding: Frequent
Calcium carbonate, maximum in profile: 15 percent
Available water storage in profile: Moderate (about 6.1 inches)

Interpretive groups

Land capability classification (irrigated): None specified
Land capability classification (nonirrigated): 5w
Hydrologic Soil Group: B/D
Hydric soil rating: Yes

Description of Udifluvents

Setting

Landform: Flood plains
Landform position (two-dimensional): Summit
Landform position (three-dimensional): Talf

Down-slope shape: Concave
Across-slope shape: Convex
Parent material: Alluvium with a wide range of texture

Typical profile

H1 - 0 to 4 inches: very gravelly loam
H2 - 4 to 70 inches: very gravelly sand

Properties and qualities

Slope: 0 to 5 percent
Depth to restrictive feature: More than 80 inches
Natural drainage class: Moderately well drained
Capacity of the most limiting layer to transmit water (Ksat): Moderately low to very high (0.06 to 19.98 in/hr)
Depth to water table: About 24 to 72 inches
Frequency of flooding: Frequent
Frequency of ponding: None
Calcium carbonate, maximum in profile: 15 percent
Available water storage in profile: Low (about 5.9 inches)

Interpretive groups

Land capability classification (irrigated): None specified
Land capability classification (nonirrigated): 5w
Hydrologic Soil Group: A
Hydric soil rating: No

Minor Components

Tioga

Percent of map unit: 5 percent
Hydric soil rating: No

Chenango

Percent of map unit: 5 percent
Hydric soil rating: No

Wayland

Percent of map unit: 5 percent
Landform: Flood plains
Hydric soil rating: Yes

Middlebury

Percent of map unit: 5 percent
Hydric soil rating: No

Cy—Cut and fill lands, silty materials

Map Unit Setting

National map unit symbol: 9pxg
Mean annual precipitation: 36 to 45 inches
Mean annual air temperature: 43 to 48 degrees F

Frost-free period: 110 to 180 days
Farmland classification: Not prime farmland

Map Unit Composition

Udorthents, silty, and similar soils: 75 percent
Minor components: 25 percent
Estimates are based on observations, descriptions, and transects of the mapunit.

Description of Udorthents, Silty

Typical profile

H1 - 0 to 4 inches: silt loam
H2 - 4 to 70 inches: silt loam

Properties and qualities

Slope: 0 to 8 percent
Depth to restrictive feature: More than 80 inches
Natural drainage class: Well drained
Capacity of the most limiting layer to transmit water (Ksat): Moderately low to high (0.06 to 5.95 in/hr)
Depth to water table: About 36 to 72 inches
Frequency of flooding: None
Frequency of ponding: None
Calcium carbonate, maximum in profile: 15 percent
Available water storage in profile: Low (about 5.5 inches)

Interpretive groups

Land capability classification (irrigated): None specified
Land capability classification (nonirrigated): 6s
Hydrologic Soil Group: A
Hydric soil rating: No

Minor Components

Unadilla

Percent of map unit: 5 percent
Hydric soil rating: No

Fluvaquents

Percent of map unit: 5 percent
Landform: Flood plains
Hydric soil rating: Yes

Scio

Percent of map unit: 5 percent
Hydric soil rating: No

Wayland

Percent of map unit: 5 percent
Landform: Flood plains
Hydric soil rating: Yes

Udifluvents

Percent of map unit: 5 percent
Hydric soil rating: No

Soil Information for Cropland

Suitabilities and Limitations for Use

The Suitabilities and Limitations for Use section includes various soil interpretations displayed as thematic maps with a summary table for the soil map units in the selected area of interest. A single value or rating for each map unit is generated by aggregating the interpretive ratings of individual map unit components. This aggregation process is defined for each interpretation.

Land Classifications

Land Classifications are specified land use and management groupings that are assigned to soil areas because combinations of soil have similar behavior for specified practices. Most are based on soil properties and other factors that directly influence the specific use of the soil. Example classifications include ecological site classification, farmland classification, irrigated and nonirrigated land capability classification, and hydric rating.

Farmland Classification (ROBERT STREET STORMWATER PUMP STATION UPGRADE)

Farmland classification identifies map units as prime farmland, farmland of statewide importance, farmland of local importance, or unique farmland. It identifies the location and extent of the soils that are best suited to food, feed, fiber, forage, and oilseed crops. NRCS policy and procedures on prime and unique farmlands are published in the "Federal Register," Vol. 43, No. 21, January 31, 1978.

Map—Farmland Classification (ROBERT STREET STORMWATER PUMP STATION UPGRADE)

MAP LEGEND

Area of Interest (AOI)

- Area of Interest (AOI)

Soils

Soil Rating Polygons

- Not prime farmland
- All areas are prime farmland
- Prime farmland if drained
- Prime farmland if protected from flooding or not frequently flooded during the growing season
- Prime farmland if irrigated
- Prime farmland if drained and either protected from flooding or not frequently flooded during the growing season
- Prime farmland if irrigated and drained
- Prime farmland if irrigated and either protected from flooding or not frequently flooded during the growing season
- Prime farmland if subsoiled, completely removing the root inhibiting soil layer
- Prime farmland if irrigated and the product of I (soil erodibility) x C (climate factor) does not exceed 60
- Prime farmland if irrigated and reclaimed of excess salts and sodium
- Farmland of statewide importance
- Farmland of local importance
- Farmland of unique importance
- Not rated or not available

Soil Rating Lines

- Not prime farmland
- All areas are prime farmland
- Prime farmland if drained
- Prime farmland if protected from flooding or not frequently flooded during the growing season
- Prime farmland if irrigated
- Prime farmland if drained and either protected from flooding or not frequently flooded during the growing season
- Prime farmland if irrigated and drained
- Prime farmland if irrigated and either protected from flooding or not frequently flooded during the growing season
- Prime farmland if subsoiled, completely removing the root inhibiting soil layer
- Prime farmland if irrigated and the product of I (soil erodibility) x C (climate factor) does not exceed 60
- Prime farmland if irrigated and reclaimed of excess salts and sodium
- Farmland of statewide importance
- Farmland of local importance
- Farmland of unique importance
- Not rated or not available

Soil Rating Points

- Not prime farmland
- All areas are prime farmland
- Prime farmland if drained
- Prime farmland if protected from flooding or not frequently flooded during the growing season
- Prime farmland if irrigated
- Prime farmland if drained and either protected from flooding or not frequently flooded during the growing season
- Prime farmland if irrigated and drained
- Prime farmland if irrigated and either protected from flooding or not frequently flooded during the growing season
- Prime farmland if subsoiled, completely removing the root inhibiting soil layer
- Prime farmland if irrigated and the product of I (soil erodibility) x C (climate factor) does not exceed 60
- Prime farmland if irrigated and reclaimed of excess salts and sodium
- Farmland of statewide importance
- Farmland of local importance
- Farmland of unique importance
- Not rated or not available

Water Features

MAP INFORMATION

Streams and Canals

Transportation

Rails

Interstate Highways

US Routes

Major Roads

Local Roads

Background

Aerial Photography

The soil surveys that comprise your AOI were mapped at 1:15,800.

Warning: Soil Map may not be valid at this scale.

Enlargement of maps beyond the scale of mapping can cause misunderstanding of the detail of mapping and accuracy of soil line placement. The maps do not show the small areas of contrasting soils that could have been shown at a more detailed scale.

Please rely on the bar scale on each map sheet for map measurements.

Source of Map: Natural Resources Conservation Service
Web Soil Survey URL: http://websoilsurvey.nrcs.usda.gov
Coordinate System: Web Mercator (EPSG:3857)

Maps from the Web Soil Survey are based on the Web Mercator projection, which preserves direction and shape but distorts distance and area. A projection that preserves area, such as the Albers equal-area conic projection, should be used if more accurate calculations of distance or area are required.

This product is generated from the USDA-NRCS certified data as of the version date(s) listed below.

Soil Survey Area: Broome County, New York
Survey Area Data: Version 14, Sep 23, 2016

Soil map units are labeled (as space allows) for map scales 1:50,000 or larger.

Date(s) aerial images were photographed: Jun 2, 2010—Oct 8, 2010

The orthophoto or other base map on which the soil lines were compiled and digitized probably differs from the background imagery displayed on these maps. As a result, some minor shifting of map unit boundaries may be evident.

Table—Farmland Classification (ROBERT STREET STORMWATER PUMP STATION UPGRADE)

Farmland Classification— Summary by Map Unit — Broome County, New York (NY007)				
Map unit symbol	**Map unit name**	**Rating**	**Acres in AOI**	**Percent of AOI**
Ad	Alluvial land	Not prime farmland	0.0	8.3%
Cy	Cut and fill lands, silty materials	Not prime farmland	0.3	91.7%
Totals for Area of Interest			**0.4**	**100.0%**

Rating Options—Farmland Classification (ROBERT STREET STORMWATER PUMP STATION UPGRADE)

Aggregation Method: No Aggregation Necessary

Tie-break Rule: Lower

References

American Association of State Highway and Transportation Officials (AASHTO). 2004. Standard specifications for transportation materials and methods of sampling and testing. 24th edition.

American Society for Testing and Materials (ASTM). 2005. Standard classification of soils for engineering purposes. ASTM Standard D2487-00.

Cowardin, L.M., V. Carter, F.C. Golet, and E.T. LaRoe. 1979. Classification of wetlands and deep-water habitats of the United States. U.S. Fish and Wildlife Service FWS/OBS-79/31.

Federal Register. July 13, 1994. Changes in hydric soils of the United States.

Federal Register. September 18, 2002. Hydric soils of the United States.

Hurt, G.W., and L.M. Vasilas, editors. Version 6.0, 2006. Field indicators of hydric soils in the United States.

National Research Council. 1995. Wetlands: Characteristics and boundaries.

Soil Survey Division Staff. 1993. Soil survey manual. Soil Conservation Service. U.S. Department of Agriculture Handbook 18. http://www.nrcs.usda.gov/wps/portal/nrcs/detail/national/soils/?cid=nrcs142p2_054262

Soil Survey Staff. 1999. Soil taxonomy: A basic system of soil classification for making and interpreting soil surveys. 2nd edition. Natural Resources Conservation Service, U.S. Department of Agriculture Handbook 436. http://www.nrcs.usda.gov/wps/portal/nrcs/detail/national/soils/?cid=nrcs142p2_053577

Soil Survey Staff. 2010. Keys to soil taxonomy. 11th edition. U.S. Department of Agriculture, Natural Resources Conservation Service. http://www.nrcs.usda.gov/wps/portal/nrcs/detail/national/soils/?cid=nrcs142p2_053580

Tiner, R.W., Jr. 1985. Wetlands of Delaware. U.S. Fish and Wildlife Service and Delaware Department of Natural Resources and Environmental Control, Wetlands Section.

United States Army Corps of Engineers, Environmental Laboratory. 1987. Corps of Engineers wetlands delineation manual. Waterways Experiment Station Technical Report Y-87-1.

United States Department of Agriculture, Natural Resources Conservation Service. National forestry manual. http://www.nrcs.usda.gov/wps/portal/nrcs/detail/soils/home/?cid=nrcs142p2_053374

United States Department of Agriculture, Natural Resources Conservation Service. National range and pasture handbook. http://www.nrcs.usda.gov/wps/portal/nrcs/detail/national/landuse/rangepasture/?cid=stelprdb1043084

United States Department of Agriculture, Natural Resources Conservation Service. National soil survey handbook, title 430-VI. http://www.nrcs.usda.gov/wps/portal/nrcs/detail/soils/scientists/?cid=nrcs142p2_054242

United States Department of Agriculture, Natural Resources Conservation Service. 2006. Land resource regions and major land resource areas of the United States, the Caribbean, and the Pacific Basin. U.S. Department of Agriculture Handbook 296. http://www.nrcs.usda.gov/wps/portal/nrcs/detail/national/soils/?cid=nrcs142p2_053624

United States Department of Agriculture, Soil Conservation Service. 1961. Land capability classification. U.S. Department of Agriculture Handbook 210. http://www.nrcs.usda.gov/Internet/FSE_DOCUMENTS/nrcs142p2_052290.pdf

Shallow Excavations—Broome County, New York

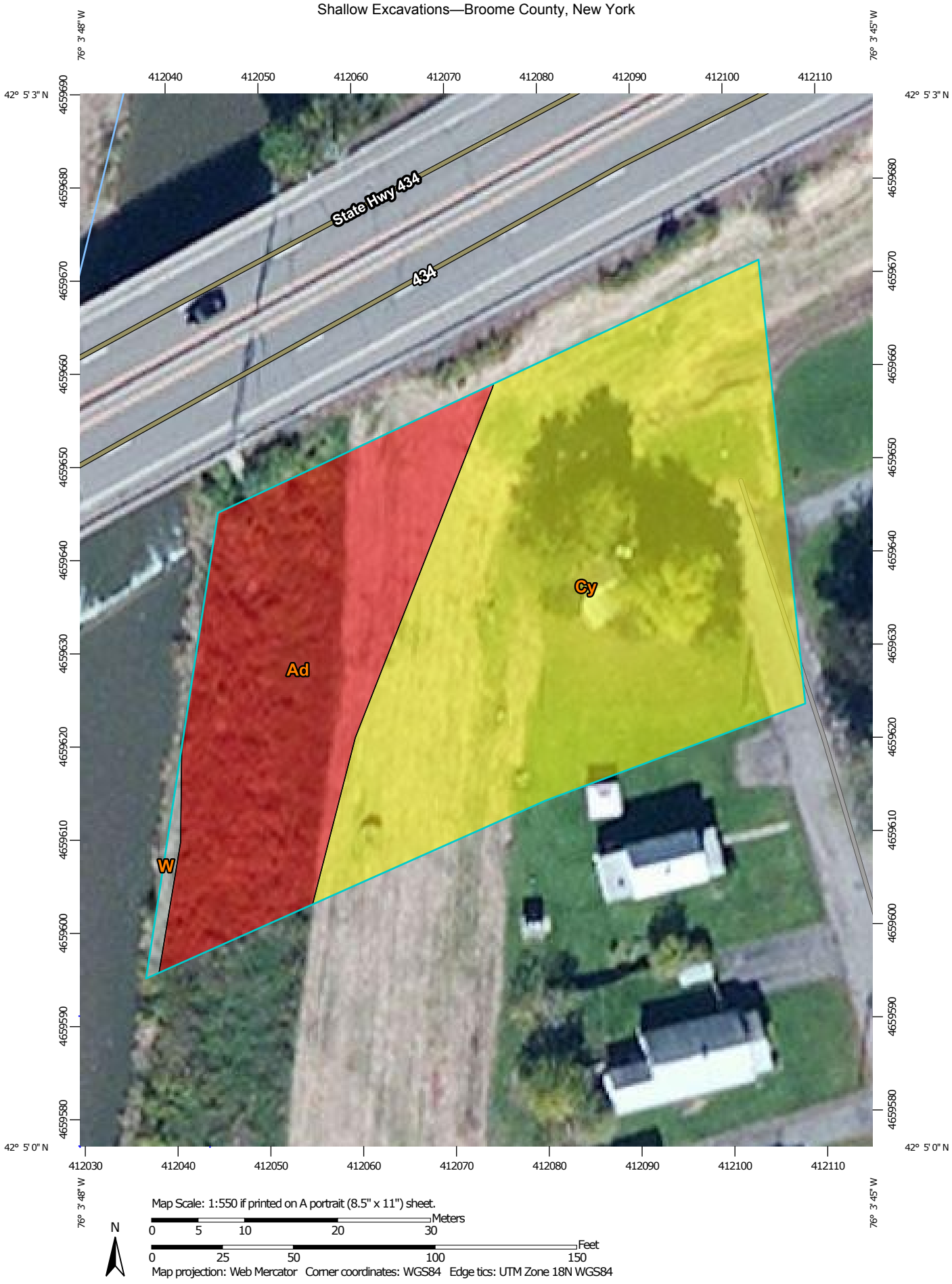

MAP LEGEND

Area of Interest (AOI)

Area of Interest (AOI)

Soils

Soil Rating Polygons

Very limited

Somewhat limited

Not limited

Not rated or not available

Soil Rating Lines

Very limited

Somewhat limited

Not limited

Not rated or not available

Soil Rating Points

Very limited

Somewhat limited

Not limited

Not rated or not available

Water Features

Streams and Canals

Transportation

Rails

Interstate Highways

US Routes

Major Roads

Local Roads

Background

Aerial Photography

MAP INFORMATION

The soil surveys that comprise your AOI were mapped at 1:15,800.

Warning: Soil Map may not be valid at this scale.

Enlargement of maps beyond the scale of mapping can cause misunderstanding of the detail of mapping and accuracy of soil line placement. The maps do not show the small areas of contrasting soils that could have been shown at a more detailed scale.

Please rely on the bar scale on each map sheet for map measurements.

Source of Map: Natural Resources Conservation Service
Web Soil Survey URL: http://websoilsurvey.nrcs.usda.gov
Coordinate System: Web Mercator (EPSG:3857)

Maps from the Web Soil Survey are based on the Web Mercator projection, which preserves direction and shape but distorts distance and area. A projection that preserves area, such as the Albers equal-area conic projection, should be used if more accurate calculations of distance or area are required.

This product is generated from the USDA-NRCS certified data as of the version date(s) listed below.

Soil Survey Area: Broome County, New York
Survey Area Data: Version 12, Sep 13, 2014

Soil map units are labeled (as space allows) for map scales 1:50,000 or larger.

Date(s) aerial images were photographed: Jun 2, 2010—Oct 8, 2011

The orthophoto or other base map on which the soil lines were compiled and digitized probably differs from the background imagery displayed on these maps. As a result, some minor shifting of map unit boundaries may be evident.

Shallow Excavations

Shallow Excavations— Summary by Map Unit — Broome County, New York (NY007)						
Map unit symbol	**Map unit name**	**Rating**	**Component name (percent)**	**Rating reasons (numeric values)**	**Acres in AOI**	**Percent of AOI**
Ad	Alluvial land	Very limited	Fluvaquents (50%)	Ponding (1.00)	0.3	33.8%
				Depth to saturated zone (1.00)		
				Flooding (0.80)		
				Dusty (0.01)		
				Unstable excavation walls (0.01)		
			Udifluvents (30%)	Unstable excavation walls (1.00)		
				Flooding (0.80)		
				Depth to saturated zone (0.61)		
Cy	Cut and fill lands, silty materials	Somewhat limited	Udorthents, silty (75%)	Depth to saturated zone (0.35)	0.5	65.3%
				Dusty (0.01)		
				Unstable excavation walls (0.01)		
W	Water	Not rated	Water (100%)		0.0	0.9%
Totals for Area of Interest					**0.8**	**100.0%**

Shallow Excavations— Summary by Rating Value		
Rating	**Acres in AOI**	**Percent of AOI**
Somewhat limited	0.5	65.3%
Very limited	0.3	33.8%
Null or Not Rated	0.0	0.9%
Totals for Area of Interest	**0.8**	**100.0%**

Description

Shallow excavations are trenches or holes dug to a maximum depth of 5 or 6 feet for graves, utility lines, open ditches, or other purposes. The ratings are based on the soil properties that influence the ease of digging and the resistance to sloughing. Depth to bedrock or a cemented pan, hardness of bedrock or a cemented pan, the amount of large stones, and dense layers influence the ease of digging, filling, and compacting. Depth to the seasonal high water table, flooding, and ponding may restrict the period when excavations can be made. Slope influences the ease of using machinery. Soil texture, depth to the water table, and linear extensibility (shrink-swell potential) influence the resistance to sloughing.

The ratings are both verbal and numerical. Rating class terms indicate the extent to which the soils are limited by all of the soil features that affect the specified use. "Not limited" indicates that the soil has features that are very favorable for the specified use. Good performance and very low maintenance can be expected. "Somewhat limited" indicates that the soil has features that are moderately favorable for the specified use. The limitations can be overcome or minimized by special planning, design, or installation. Fair performance and moderate maintenance can be expected. "Very limited" indicates that the soil has one or more features that are unfavorable for the specified use. The limitations generally cannot be overcome without major soil reclamation, special design, or expensive installation procedures. Poor performance and high maintenance can be expected.

Numerical ratings indicate the severity of individual limitations. The ratings are shown as decimal fractions ranging from 0.01 to 1.00. They indicate gradations between the point at which a soil feature has the greatest negative impact on the use (1.00) and the point at which the soil feature is not a limitation (0.00).

The map unit components listed for each map unit in the accompanying Summary by Map Unit table in Web Soil Survey or the Aggregation Report in Soil Data Viewer are determined by the aggregation method chosen. An aggregated rating class is shown for each map unit. The components listed for each map unit are only those that have the same rating class as listed for the map unit. The percent composition of each component in a particular map unit is presented to help the user better understand the percentage of each map unit that has the rating presented.

Other components with different ratings may be present in each map unit. The ratings for all components, regardless of the map unit aggregated rating, can be viewed by generating the equivalent report from the Soil Reports tab in Web Soil Survey or from the Soil Data Mart site. Onsite investigation may be needed to validate these interpretations and to confirm the identity of the soil on a given site.

Rating Options

Aggregation Method: Dominant Condition

Component Percent Cutoff: *None Specified*

Tie-break Rule: Higher

Attachment 8

State Historic and Tribal Historic Preservation Office Documentation:

SHPO Response
Affidavit of Mailing for THPO
Stockbridge-Munsee Mohican Tribe Response
Oneida Indian Nation Response
Delaware Nation Response
Letter Sent to SHPO
Letter Sent to Onondaga Nation
Letter Sent to Delaware Nation
Letter Sent to Delaware Tribe of Indians
Letter Sent to Seneca-Cayuga Nation
Letter Sent to Oneida Indian Nation
Letter Sent to Stockbridge-Munsee Mohican Tribe of Indians
Letter Sent to the Tuscarora Tribe of Indians

NEW YORK STATE OF OPPORTUNITY.

Parks, Recreation, and Historic Preservation

ANDREW M. CUOMO
Governor

ROSE HARVEY
Commissioner

January 21, 2016

Ms. Mary Barthelme
Environmental Program Assistant
Govenor's Office of Storm Recovery
99 Washington Street
Suite 1224
Albany, NY 12260

Re: HTF
Robert Street Stormwater Pump Station Upgrade, Amendment
, Town of Vestal, Broome County, NY
16PR00300

Dear Ms. Barthelme:

Thank you for requesting the comments of the State Historic Preservation Office (SHPO). We have reviewed the project in accordance with Section 106 of the National Historic Preservation Act of 1966. These comments are those of the SHPO and relate only to Historic/Cultural resources. They do not include potential environmental impacts to New York State Parkland that may be involved in or near your project. Such impacts must be considered as part of the environmental review of the project pursuant to the National Environmental Policy Act and/or the State Environmental Quality Review Act (New York Environmental Conservation Law Article 8).

Based upon this review, the New York SHPO has determined that no historic properties will be affected by this undertaking.

If further correspondence is required regarding this project, please be sure to refer to the OPRHP Project Review (PR) number noted above.

Sincerely,

Ruth L. Pierpont

Ruth L. Pierpont

Deputy Commissioner for Historic Preservation

Andrew M. Cuomo
Governor

Rose Harvey
Commissioner

New York State Office of Parks, Recreation and Historic Preservation

Division for Historic Preservation
Peebles Island, PO Box 189, Waterford, New York 12188-0189
518-237-8643
www.nysparks.com

February 03, 2015

Mr. Thomas King
Assistant General Counsel
NYS Governor's Office of Storm Recovery
99 Washington Street
Suite 1224
Albany, NY 12231

Re: HUD
Robert Street Stormwater Pump Station Upgrade
549 Vestal Parkway, Vestal, NY
15PR00224

Dear Mr. King:

Thank you for requesting the comments of the State Historic Preservation Office (SHPO). We have reviewed the project in accordance with Section 106 of the National Historic Preservation Act of 1966. These comments are those of the SHPO and relate only to Historic/Cultural resources. They do not include potential environmental impacts to New York State Parkland that may be involved in or near your project. Such impacts must be considered as part of the environmental review of the project pursuant to the National Environmental Policy Act and/or the State Environmental Quality Review Act (New York Environmental Conservation Law Article 8).

Based upon this review, the New York SHPO has determined that no historic properties will be affected by this undertaking.

If further correspondence is required regarding this project, please be sure to refer to the OPRHP Project Review (PR) number noted above.

Sincerely,

Ruth L. Pierpont

Ruth L. Pierpont
Deputy Commissioner for Historic Preservation

Affidavit of Mailing

STATE OF NEW YORK)
: SS. :
COUNTY OF ALBANY)

MARY BARTHELME, being duly sworn, deposes and says:

1. I am over the age of eighteen years.
2. On January, 19th, 2016, I mailed true and correct copies of the annexed Section 106 Tribal Consultation, Robert Street Stormwater Pump Station Upgrade dated January 19, 2016, by placing the same in first class post-paid envelopes addressed: SEE ATTACHED LIST.
3. On said day, I deposited said envelopes in a mailbox at 99 Washington Avenue, Albany, New York 12260.

Mary Barthelme

Sworn to before me this
20th day of January 2016

Notary Public

STEPHEN APISA JR.
Notary Public, State of New York
Qualified in Albany County
Reg. No. 01AP6142252
Commission Expires March 13, 2018

Mr. Bryan Printup, Nation Rep. for
Section 106
Tuscarora Nation of New York
5226 E. Walmore Road, Tuscarora Nation
Lewiston, NY 14092

Irving Powless, Chief
Onondaga Nation
RR#1, Box 319-B
Onondaga Nation via Nedrow, NY
13120

Susan Bachor
Delaware Tribe of Indians Historic
Preservation Representative
P.O. Box 64
Pocono Lake, PA 73005

Wallace Miller, President
Stockbridge-Munsee Community,
Band of the Mohicans
N8476 Moh He Con Nuck Road
Bowler, WI 54416

Ray Halbritter, Nation
Representative
Oneida Indian Nation
5218 Patrick Road
Verona, NY 13478

Kerry Holton, President
Delaware Nation
P.O. Box 825
Anadarko, OK 73005

Anthony Gonyea, Faithkeeper-Beaver
Clan
Onondaga Nation
RR#1, Box 245
Onondaga Nation via Nedrow, NY 13120

Chet Brooks, Chief
Delaware Tribe of Indians, Delaware
Tribal Headquarters
5100 Tuxedo Blvd
Bartlesville, OK 74006

From: Bonney Hartley [mailto:Bonney.Hartley@mohican-nsn.gov]
Sent: Wednesday, January 20, 2016 2:35 PM
To: King, Thomas J (STORMRECOVERY) <Thomas.King@stormrecovery.ny.gov>
Subject: RE: Section 106 Compliance for the Robert Street Stormwater Pump Station Upgrade Town of Vestal, Broome County, NY

Hi Tom,
We do not have concerns with this project as it is occurring within a previously disturbed area.
Thank you,
Bonney

Bonney Hartley
Tribal Historic Preservation Officer
Stockbridge-Munsee Mohican Tribal Historic Preservation
New York Office
65 1st Street
Troy, NY 12180

(518) 244-3164
Bonney.Hartley@mohican-nsn.gov
www.mohican-nsn.gov
Physical Address: 37 1st Street

From: King, Thomas J (STORMRECOVERY) [mailto:Thomas.King@stormrecovery.ny.gov]
Sent: Tuesday, January 19, 2016 10:22 AM
To: Bonney Hartley
Cc: Barthelme, Mary (STORMRECOVERY); Gievers, Andrea
Subject: Section 106 Compliance for the Robert Street Stormwater Pump Station Upgrade Town of Vestal, Broome County, NY

Dear Bonney,

Please see the attached consultation for the above-mentioned project.

A hard copy is being sent today by mail.

Please contact me should you have any questions. Thank you!

Sincerely,
Tom King

Director – Bureau of Environmental Review and Assessment
Assistant General Counsel
Governor's Office of Storm Recovery
99 Washington Avenue Suite 1224
Albany, New York 12260
Office: (518) 473-0015
Mobile: (646) 417-4660
Thomas.King@StormRecovery.NY.Gov

ONEIDA INDIAN NATION

JESSE J. BERGEVIN
HISTORIC RESOURCES SPECIALIST

DIRECT DIAL: (315) 829-8463
FACSIMILE: (315) 829-8473
E-MAIL: jbergevin@oneida-nation.org

ONEIDA NATION HOMELANDS

February 12, 2016

Tom King
Director – Bureau of Environmental Review and Assessment
Assistant General Counsel
Governor's Office of Storm Recovery
99 Washington Avenue Suite 1224
Albany, New York 12231
(*Transmitted by email*)

Re: Section 106 Discussion
CDBG-DR, NYRCR Robert Street Storm Water Pump Station Upgrade
Town of Vestal, Broome County, NY

Dear Mr. King,

On January 19, 2016, the Oneida Indian Nation (the "Nation") received an email with documentation from the Governor's Office of Storm Recovery regarding the proposal to fund, through the Community Development Block Grant Disaster Recovery Program, for the rehabilitation and improvements to convert a defunct sanitary sewer pump station to a storm water pump station (the "Project") in the Town of Vestal, Broome County, New York.

I have reviewed the information provided and it appears the Project lies outside of the Oneida's aboriginal territory.

Please feel free to contact me at (315) 829-8463 with any questions.

Very truly yours,

ONEIDA INDIAN NATION

Jesse J. Bergevin

Barthelme, Mary (STORMRECOVERY)

From: King, Thomas J (STORMRECOVERY)
Sent: Monday, April 25, 2016 4:16 PM
To: Barthelme, Mary (STORMRECOVERY)
Subject: Fwd: CDBG-DR, NYRCR Robert Street Stormwater Pump Station upgrade, Vestal, Broome Co., NY

Follow Up Flag: Follow up
Flag Status: Completed

FYI can you upload?

Begin forwarded message:

From: Nekole Alligood <NAlligood@delawarenation.com>
Date: April 25, 2016 at 10:55:17 AM MST
To: "King, Thomas J (STORMRECOVERY)" <Thomas.King@stormrecovery.ny.gov>
Subject: CDBG-DR, NYRCR Robert Street Stormwater Pump Station upgrade, Vestal, Broome Co., NY

ATTENTION: This email came from an external source. Do not open attachments or click on links from unknown senders or unexpected emails.

Good afternoon. I apologize for exceeding well beyond the 30 day turn around period for such projects as the one listed in the above subject line.

On behalf of the Delaware Nation, I can find no concerns with this course of action and urge you all to proceed as planned. Please keep in mind should any artifacts, sites or human remains be inadvertently discovered during the course of construction, all work will cease immediately until the pertinent parties are contacted (including this office) and a proper archaeological assessment can be made.

If you require a formal letter for your files, please let me know. If not, I hope this message suffices for your records.

Thank you!

Nekole

Nekole Alligood
Director of NAGPRA/106
Delaware Nation

PO Box 825
Ph. 405-247-2448, ext. 1403
cell 405-201-8038.

From: Nekole Alligood [mailto:NAlligood@delawarenation.com]
Sent: Tuesday, February 09, 2016 9:44 AM
To: King, Thomas J (STORMRECOVERY) <Thomas.King@stormrecovery.ny.gov>
Cc: Corey Smith <CSmith@delawarenation.com>
Subject: CDBG-DR, NYRCR Robert Street Stormwater pump station upgrade, Vestal, Broome County, NY.

Good morning.

In regards to the above mentioned project, I have reviewed the information provided and on behalf of the Delaware Nation can find no concerns relating to it. Please proceed as planned keeping in mind that should any sites or artifacts inadvertently be discovered during the course of construction, all work will cease immediately until a proper archaeological assessment can be made and the concerned agencies, including this office, are notified.

Thank you!

Nekole Alligood
Director of Cultural Preservation
Delaware Nation
31064 HWY 281
PO Box 281
Anadarko, OK 73005
Phone: 405-247-2448
Fax: 405-247-8905

January 19, 2016

John Bonafide
Director, Technical Preservation Bureau
Division for Historic Preservation
NYS Office of Parks, Recreation & Historic Preservation
P.O. Box 189 – Peebles Island State Park
Waterford, NY 12188-0189

Re: Section 106 Discussion
CDBG-DR, NYRCR Robert Street Stormwater Pump Station Upgrade
Town of Vestal, Broome County, NY

Dear Mr. Bonafide,

Pursuant to the Disaster Relief Appropriations Act, 2013 (Public Law 113-2) and the Housing and Community Development Act (42 U.S.C. § 5301 et seq.), the Governor's Office of Storm Recovery (GOSR), an office of New York State Homes and Community Renewal's Housing Trust Fund Corporation as a recipient of Community Development Block Grant – Disaster Recovery ("CDBG-DR") funds from the United States Department of Housing and Urban Development ("HUD"), is serving as the entity responsible for compliance with the HUD environmental review procedures set forth in 24 CFR Part 58. GOSR is acting on behalf of HUD in providing the enclosed project information and request for consultation.

GOSR processes environmental reviews for projects funded with HUD CDBG-DR on a case-by-case basis. A consultation request for the project described herein will also be sent to the Tribal Historic Preservation Office for the Delaware Nation, Delaware Tribe of Indians, Oneida Indian Nation, Onondaga Nation, Stockbridge-Munsee Community Band of Mohicans, and the Tuscarora Nation of New York. In accordance with Section 106 of the National Historic Preservation Act (NHPA) of 1966, as amended (16 U.S.C. 470f), and its implementing regulations, 36 Code of Federal Regulations (CFR) Part 800, this letter serves as notification of the proposed action.

Area of Potential Effect: The existing Robert Street Pump Station is located in the Town of Vestal, New York and is adjacent to the northwest limit of a dead-end street, Robert Street. The proposed project location would include the area near the northwestern boundary of Elizabeth Street and continue adjacent to NYS Route 434, along the existing right of way, to the Robert Street Pump Station. It will also include the area between the pump station and the Choconut Creek.

Proposed Project Description: The project will involve the construction of a 36-inch diameter gravity flow influent pipe that will run adjacent to NYS Route 434. This pipe will run from a proposed concrete influent structure that will be built near the northwestern limit of Elizabeth Street. Included

in this structure will be a sharp crested rectangular weir gate to control flow diverted to the pump station. Electrical service is also proposed to be installed underground from a nearby 3-phase utility pole located adjacent to NYS Route 434. The electric service is proposed to run along the area of the concrete influent structure and follow underground within the vicinity of the 36-inch diameter gravity flow influent pipe to the existing Robert Street Pump Station. The above-grade structure of the pump station will be demolished and a pavilion-type structure will replace it to protect the rehabilitated pump station. The infrastructure within the below-grade levels of the pump station will be replaced including retrofitting the station with new pumps and new electrical service. Miscellaneous structural and mechanical improvements will also be completed. From the existing Robert Street Pump Station, dual 24-inch effluent force mains with duckbill check valves at the discharge points are proposed to lead from the pump house to discharge into Choconut Creek. Two air release valve manholes will also be constructed along these force main lines. The stormwater pump station would pump stormwater over the flood levee to the Choconut Creek to reduce the reoccurrence of flooding in the Robert Street neighborhood.

Proposed rehabilitation work and construction is within the limits of a previously disturbed areas, including the area of the existing pump station, the area of the levee along Choconut Creek, and the area at the toe of the slope adjacent to the 4-lane NYS Route 434. The proposed action lies in the right of way of four-lane NYS 434, historically used as two-lane NYS Route 17. The Town of Vestal has a 15" diameter RCP sanitary sewer line that runs parallel and between NYS Route 434, therefore, previous disturbance for sewer trenching and roadway work has occurred in this area. Thus, the proposed work is expected to occur entirely in previously disturbed location. If there is any unanticipated discovery of artifacts or cultural resources during the construction, work will halt immediately for an archeological survey and interested parties would be notified.

The purpose of this letter is to initiate consultation pursuant to Section 106 of the NHPA per the implementing regulations at 36 Code of Federal Regulations (CFR) Part 800. GOSR respectfully requests your review of the proposed project described herein. If you have any questions or require additional information regarding this request, please feel free to contact me at (646) 417-4660 or via email at Thomas.King@stormrecovery.ny.gov. Thank you for your time and consideration.

Sincerely,

Thomas J. King, Esq.
Deputy General Counsel and Certifying Officer
Governor's Office of Storm Recovery

Enclosures:
Site Maps (Topographic & Street Maps)
Site Plan

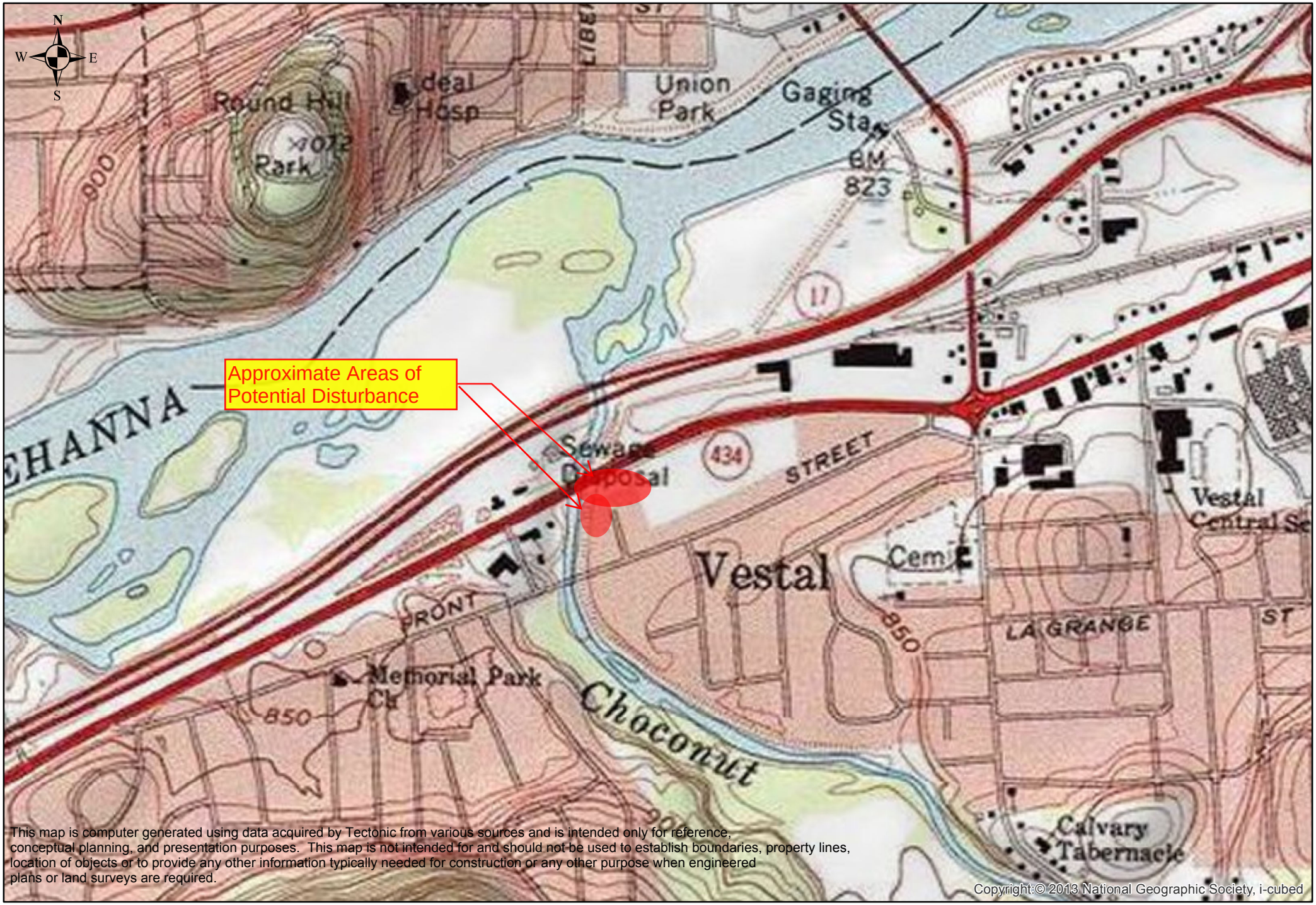

This map is computer generated using data acquired by Tectonic from various sources and is intended only for reference, conceptual planning, and presentation purposes. This map is not intended for and should not be used to establish boundaries, property lines, location of objects or to provide any other information typically needed for construction or any other purpose when engineered plans or land surveys are required.

Copyright:© 2013 National Geographic Society, i-cubed

TECTONIC

Practical Solutions, Exceptional Service

TECTONIC
70 Pleasant Hill Road,
Mountainville, N.Y. 10953
845.534.5959 voice 845.534-5999 fax
www.tectonicengineering.com

0 0.125 0.25 0.5 Miles

Topographic Map
Robert Street Stormwater Pump Station Upgrade
Town of Vestal, NY

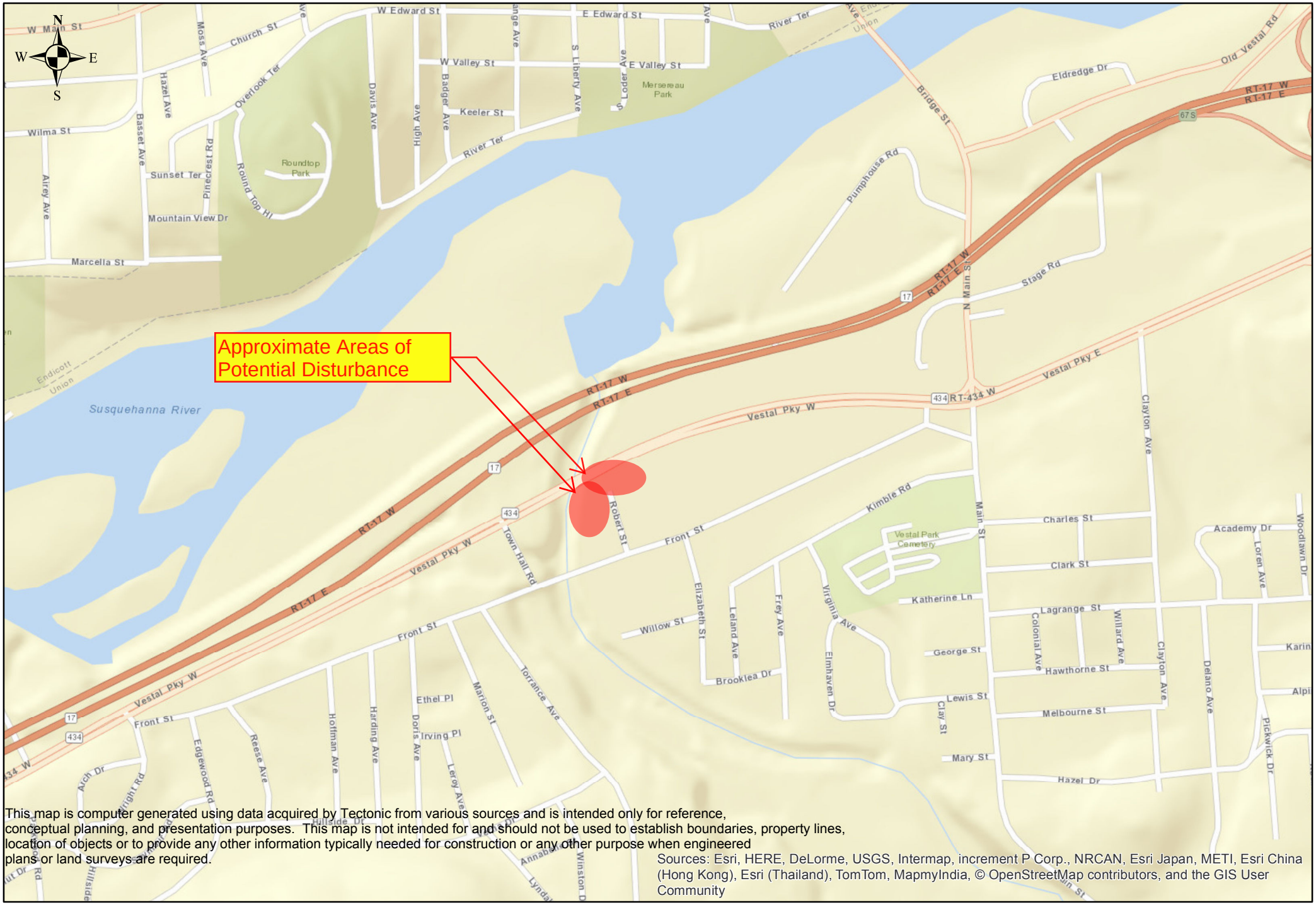

This map is computer generated using data acquired by Tectonic from various sources and is intended only for reference, conceptual planning, and presentation purposes. This map is not intended for and should not be used to establish boundaries, property lines, location of objects or to provide any other information typically needed for construction or any other purpose when engineered plans or land surveys are required.

Sources: Esri, HERE, DeLorme, USGS, Intermap, increment P Corp., NRCAN, Esri Japan, METI, Esri China (Hong Kong), Esri (Thailand), TomTom, MapmyIndia, © OpenStreetMap contributors, and the GIS User Community

TECTONIC
Practical Solutions, Exceptional Service

TECTONIC
70 Pleasant Hill Road,
Mountainville, N.Y. 10953
845.534.5959 voice 845.534-5999 fax
www.tectonicengineering.com

0 0.125 0.25 0.5 Miles

Street Map
Robert Street Stormwater Pump Station Upgrade
Town of Vestal, NY

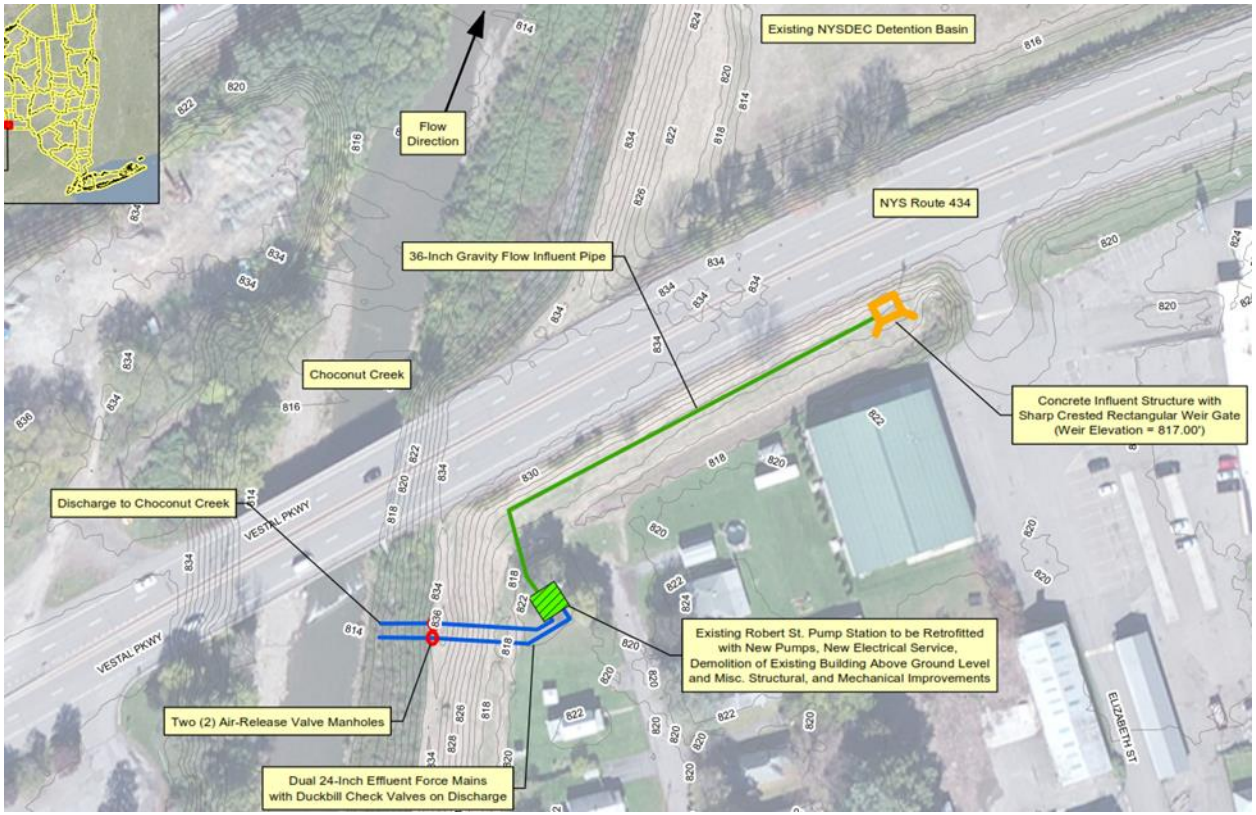
Existing NYSDEC Detention Basin
Flow Direction
NYS Route 434
36-Inch Gravity Flow Influent Pipe
Choconut Creek
Concrete Influent Structure with Sharp Crested Rectangular Weir Gate (Weir Elevation = 817.00')
Discharge to Choconut Creek
VESTAL PKWY
Existing Robert St. Pump Station to be Retrofitted with New Pumps, New Electrical Service, Demolition of Existing Building Above Ground Level and Misc. Structural, and Mechanical Improvements
Two (2) Air-Release Valve Manholes
Dual 24-Inch Effluent Force Mains with Duckbill Check Valves on Discharge
ELIZABETH ST

Proposed site of 36 inch Gravity Flow Influent Pipe
01/09/2015 12:21

January 19, 2016

Irving Powless, Chief
Onondaga Nation
RR#1, Box 319-B
Onondaga Nation via Nedrow, NY 13120

Re: Section 106 Discussion
CDBG-DR, NYRCR Robert Street Stormwater Pump Station Upgrade
Town of Vestal, Broome County, NY

Dear Mr. Powless,

Pursuant to the Disaster Relief Appropriations Act, 2013 (Public Law 113-2) and the Housing and Community Development Act (42 U.S.C. § 5301 et seq.), the Governor's Office of Storm Recovery (GOSR) is acting under the auspices of New York State Homes and Community Renewal's Housing Trust Fund Corporation as a recipient of Community Development Block Grant – Disaster Recovery ("CDBG-DR") funds from the United States Department of Housing and Urban Development ("HUD"). GOSR is the entity responsible for compliance with the HUD environmental review procedures set forth in 24 CFR Part 58. GOSR is acting on behalf of HUD in providing the enclosed project information and inviting this discussion with your Nation to respond with any concerns or comments.

GOSR processes environmental reviews for projects funded with HUD CDBG-DR on a case-by-case basis. GOSR proposes to provide grant funding for the rehabilitation and improvements to convert a defunct sanitary sewer pump station to a stormwater pump station in the Town of Vestal, Broome County, New York. In accordance with Section 101(d)(6)(B) of the National Historic Preservation Act of 1966, as amended (16 U.S.C. 470a), and its implementing regulations, 36 Code of Federal Regulations (CFR) Part 800, this letter serves as notification of the proposed action. This consultation is being sent to the Delaware Nation, Delaware Tribe of Indians, Oneida Indian Nation, Onondaga Nation, Stockbridge-Munsee Community Band of Mohicans, and the Tuscarora Nation of New York.

Area of Potential Effect: The existing Robert Street Pump Station is located in the Town of Vestal, New York and is adjacent to the northwest limit of a dead-end street, Robert Street. The proposed project location would include the area near the northwestern boundary of Elizabeth Street and continue adjacent to NYS Route 434, along the existing right of way, to the Robert Street Pump Station. It will also include the area between the pump station and the Choconut Creek.

Proposed Project Description: The project will involve the construction of a 36-inch diameter gravity flow influent pipe that will run adjacent to NYS Route 434. This pipe will run from a proposed concrete influent structure that will be built near the northwestern limit of Elizabeth Street. Included in this structure will be a sharp crested rectangular weir gate to control flow diverted to the pump

station. Electrical service is also proposed to be installed underground from a nearby 3-phase utility pole located adjacent to NYS Route 434. The electric service is proposed to run along the area of the concrete influent structure and follow underground within the vicinity of the 36-inch diameter gravity flow influent pipe to the existing Robert Street Pump Station. The above-grade structure of the pump station will be demolished and a pavilion-type structure will replace it to protect the rehabilitated pump station. The infrastructure within the below-grade levels of the pump station will be replaced including retrofitting the station with new pumps and new electrical service. Miscellaneous structural and mechanical improvements will also be completed. From the existing Robert Street Pump Station, dual 24-inch effluent force mains with duckbill check valves at the discharge points are proposed to lead from the pump house to discharge into Choconut Creek. Two air release valve manholes will also be constructed along these force main lines. The stormwater pump station would pump stormwater over the flood levee to the Choconut Creek to reduce the reoccurrence of flooding in the Robert Street neighborhood.

Proposed rehabilitation work and construction is within the limits of a previously disturbed areas, including the area of the existing pump station, the area of the levee along Choconut Creek, and the area at the toe of the slope adjacent to the 4-lane NYS Route 434. The proposed action lies in the right of way of four-lane NYS 434, historically used as two-lane NYS Route 17. The Town of Vestal has a 15" diameter RCP sanitary sewer line that runs parallel and between NYS Route 434, therefore, previous disturbance for sewer trenching and roadway work has occurred in this area. Thus, the proposed work is expected to occur entirely in previously disturbed location. If there is any unanticipated discovery of artifacts or cultural resources during the construction, work will halt immediately for an archeological survey and interested parties would be notified.

GOSR is completing an environmental review for this project pursuant to HUD NEPA regulations. If the Area of Potential Effect encompasses historic properties of religious or cultural significance to your Nation, please respond within 20 days or sooner. Additionally, please indicate if there are other sources of information or other parties, Nations, Tribes, or members of the public you believe should be included in the consultation process. Please respond by email or in writing to the address listed below.

Thomas J. King, Esq.
Deputy General Counsel and Certifying Officer
Governor's Office of Storm Recovery
99 Washington Avenue
Suite 1224
Albany, New York 12260

I am available to answer any questions that you may have regarding this action. If you have any questions, please feel free to contact me at (518) 473-0015 or via email at Thomas.King@stormrecovery.ny.gov.

Sincerely,

Thomas J. King, Esq.
Deputy General Counsel and Certifying Officer
Governor's Office of Storm Recovery

Enclosures:
Site Maps (Topographic & Street Maps)
Site Plan

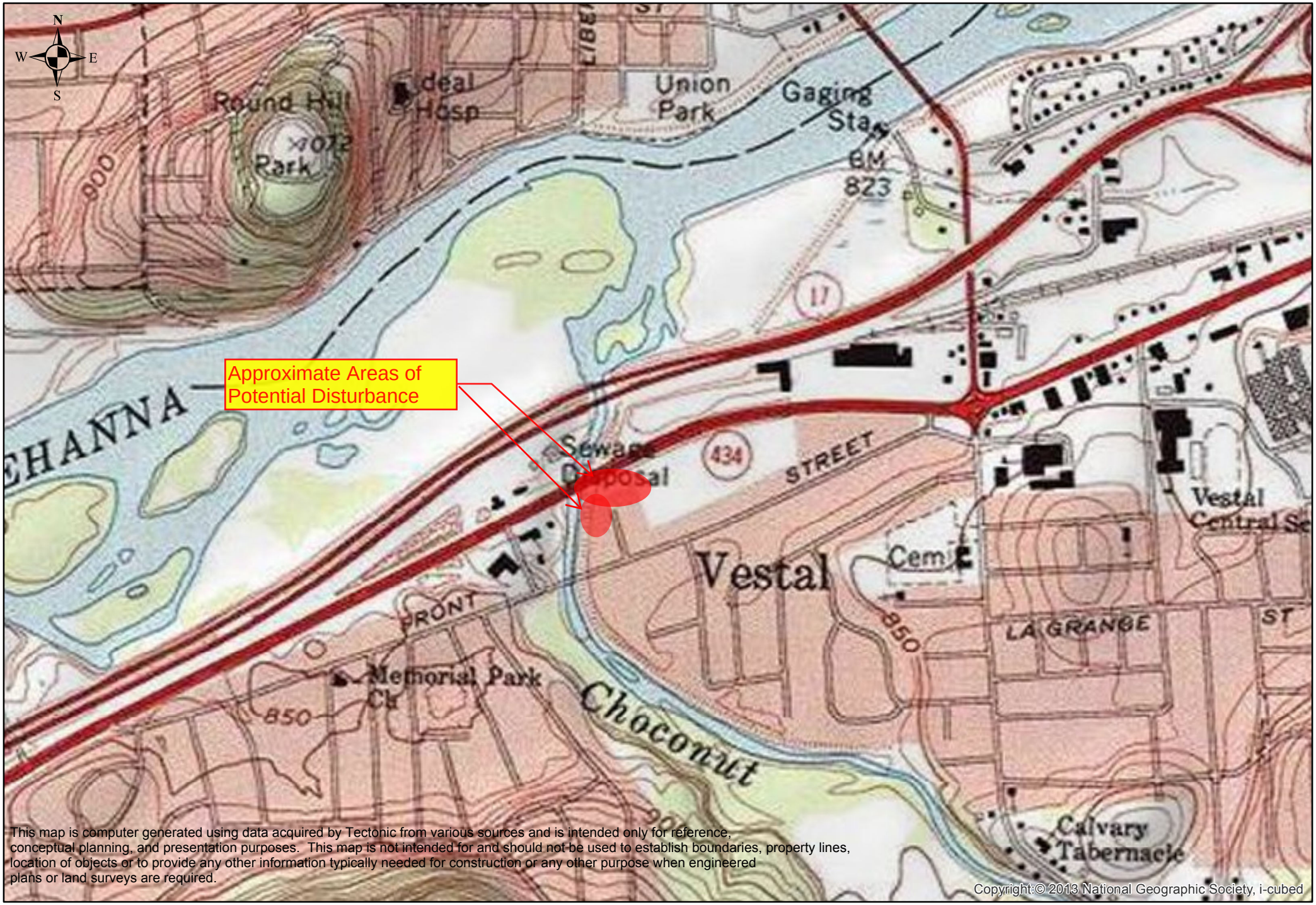

This map is computer generated using data acquired by Tectonic from various sources and is intended only for reference, conceptual planning, and presentation purposes. This map is not intended for and should not be used to establish boundaries, property lines, location of objects or to provide any other information typically needed for construction or any other purpose when engineered plans or land surveys are required.

Copyright:© 2013 National Geographic Society, i-cubed

TECTONIC
Practical Solutions, Exceptional Service

TECTONIC
70 Pleasant Hill Road,
Mountainville, N.Y. 10953
845.534.5959 voice 845.534-5999 fax
www.tectonicengineering.com

0 0.125 0.25 0.5 Miles

Topographic Map
Robert Street Stormwater Pump Station Upgrade
Town of Vestal, NY

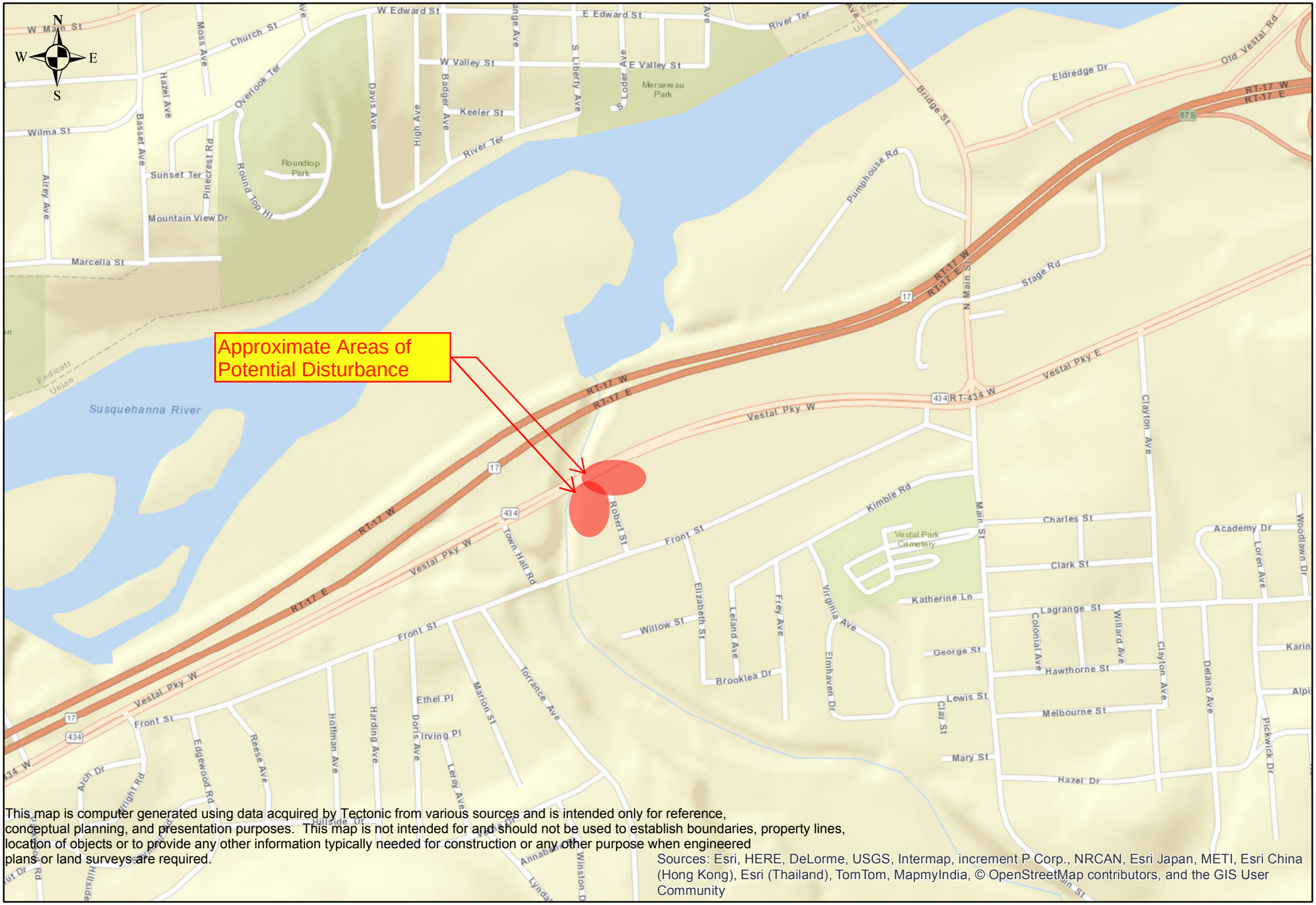

This map is computer generated using data acquired by Tectonic from various sources and is intended only for reference, conceptual planning, and presentation purposes. This map is not intended for and should not be used to establish boundaries, property lines, location of objects or to provide any other information typically needed for construction or any other purpose when engineered plans or land surveys are required.

Sources: Esri, HERE, DeLorme, USGS, Intermap, increment P Corp., NRCAN, Esri Japan, METI, Esri China (Hong Kong), Esri (Thailand), TomTom, MapmyIndia, © OpenStreetMap contributors, and the GIS User Community

TECTONIC
Practical Solutions, Exceptional Service

TECTONIC
70 Pleasant Hill Road,
Mountainville, N.Y. 10953
845.534.5959 voice 845.534-5999 fax
www.tectonicengineering.com

0 0.125 0.25 0.5 Miles

Street Map
Robert Street Stormwater Pump Station Upgrade
Town of Vestal, NY

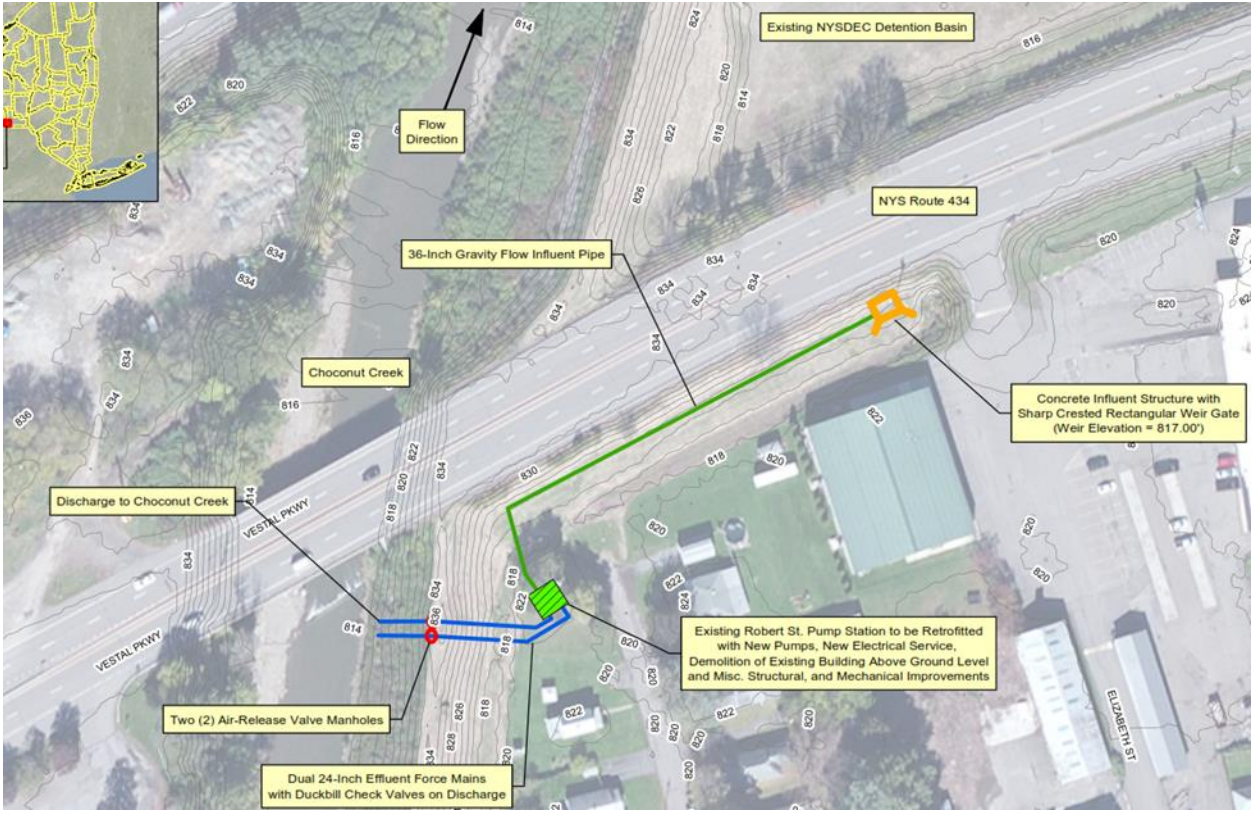
Existing NYSDEC Detention Basin
Flow Direction
NYS Route 434
36-Inch Gravity Flow Influent Pipe
Choconut Creek
Concrete Influent Structure with Sharp Crested Rectangular Weir Gate (Weir Elevation = 817.00')
Discharge to Choconut Creek
VESTAL PKWY
VESTAL PKWY
Existing Robert St. Pump Station to be Retrofitted with New Pumps, New Electrical Service, Demolition of Existing Building Above Ground Level and Misc. Structural, and Mechanical Improvements
Two (2) Air-Release Valve Manholes
Dual 24-Inch Effluent Force Mains with Duckbill Check Valves on Discharge
ELIZABETH ST

Proposed site of 36 inch Gravity Flow Influent Pipe
01/09/2015 12:21

January 19, 2016

Anthony Gonyea, Faithkeeper-Beaver Clan
Onondaga Nation
RR#1, Box 245
Onondaga Nation via Nedrow, NY 13120

Re: Section 106 Discussion
CDBG-DR, NYRCR Robert Street Stormwater Pump Station Upgrade
Town of Vestal, Broome County, NY

Dear Mr. Gonyea,

Pursuant to the Disaster Relief Appropriations Act, 2013 (Public Law 113-2) and the Housing and Community Development Act (42 U.S.C. § 5301 et seq.), the Governor's Office of Storm Recovery (GOSR) is acting under the auspices of New York State Homes and Community Renewal's Housing Trust Fund Corporation as a recipient of Community Development Block Grant – Disaster Recovery ("CDBG-DR") funds from the United States Department of Housing and Urban Development ("HUD"). GOSR is the entity responsible for compliance with the HUD environmental review procedures set forth in 24 CFR Part 58. GOSR is acting on behalf of HUD in providing the enclosed project information and inviting this discussion with your Nation to respond with any concerns or comments.

GOSR processes environmental reviews for projects funded with HUD CDBG-DR on a case-by-case basis. GOSR proposes to provide grant funding for the rehabilitation and improvements to convert a defunct sanitary sewer pump station to a stormwater pump station in the Town of Vestal, Broome County, New York. In accordance with Section 101(d)(6)(B) of the National Historic Preservation Act of 1966, as amended (16 U.S.C. 470a), and its implementing regulations, 36 Code of Federal Regulations (CFR) Part 800, this letter serves as notification of the proposed action. This consultation is being sent to the Delaware Nation, Delaware Tribe of Indians, Oneida Indian Nation, Onondaga Nation, Stockbridge-Munsee Community Band of Mohicans, and the Tuscarora Nation of New York.

Area of Potential Effect: The existing Robert Street Pump Station is located in the Town of Vestal, New York and is adjacent to the northwest limit of a dead-end street, Robert Street. The proposed project location would include the area near the northwestern boundary of Elizabeth Street and continue adjacent to NYS Route 434, along the existing right of way, to the Robert Street Pump Station. It will also include the area between the pump station and the Choconut Creek.

Proposed Project Description: The project will involve the construction of a 36-inch diameter gravity flow influent pipe that will run adjacent to NYS Route 434. This pipe will run from a proposed concrete influent structure that will be built near the northwestern limit of Elizabeth Street. Included

in this structure will be a sharp crested rectangular weir gate to control flow diverted to the pump station. Electrical service is also proposed to be installed underground from a nearby 3-phase utility pole located adjacent to NYS Route 434. The electric service is proposed to run along the area of the concrete influent structure and follow underground within the vicinity of the 36-inch diameter gravity flow influent pipe to the existing Robert Street Pump Station. The above-grade structure of the pump station will be demolished and a pavilion-type structure will replace it to protect the rehabilitated pump station. The infrastructure within the below-grade levels of the pump station will be replaced including retrofitting the station with new pumps and new electrical service. Miscellaneous structural and mechanical improvements will also be completed. From the existing Robert Street Pump Station, dual 24-inch effluent force mains with duckbill check valves at the discharge points are proposed to lead from the pump house to discharge into Choconut Creek. Two air release valve manholes will also be constructed along these force main lines. The stormwater pump station would pump stormwater over the flood levee to the Choconut Creek to reduce the reoccurrence of flooding in the Robert Street neighborhood.

Proposed rehabilitation work and construction is within the limits of a previously disturbed areas, including the area of the existing pump station, the area of the levee along Choconut Creek, and the area at the toe of the slope adjacent to the 4-lane NYS Route 434. The proposed action lies in the right of way of four-lane NYS 434, historically used as two-lane NYS Route 17. The Town of Vestal has a 15" diameter RCP sanitary sewer line that runs parallel and between NYS Route 434, therefore, previous disturbance for sewer trenching and roadway work has occurred in this area. Thus, the proposed work is expected to occur entirely in previously disturbed location. If there is any unanticipated discovery of artifacts or cultural resources during the construction, work will halt immediately for an archeological survey and interested parties would be notified.

GOSR is completing an environmental review for this project pursuant to HUD NEPA regulations. If the Area of Potential Effect encompasses historic properties of religious or cultural significance to your Nation, please respond within 20 days or sooner. Additionally, please indicate if there are other sources of information or other parties, Nations, Tribes, or members of the public you believe should be included in the consultation process. Please respond by email or in writing to the address listed below.

Thomas J. King, Esq.
Deputy General Counsel and Certifying Officer
Governor's Office of Storm Recovery
99 Washington Avenue
Suite 1224
Albany, New York 12260

I am available to answer any questions that you may have regarding this action. If you have any questions, please feel free to contact me at (518) 473-0015 or via email at Thomas.King@stormrecovery.ny.gov.

Sincerely,

Thomas J. King, Esq.
Deputy General Counsel and Certifying Officer
Governor's Office of Storm Recovery

Enclosures:
Site Maps (Topographic & Street Maps)
Site Plan

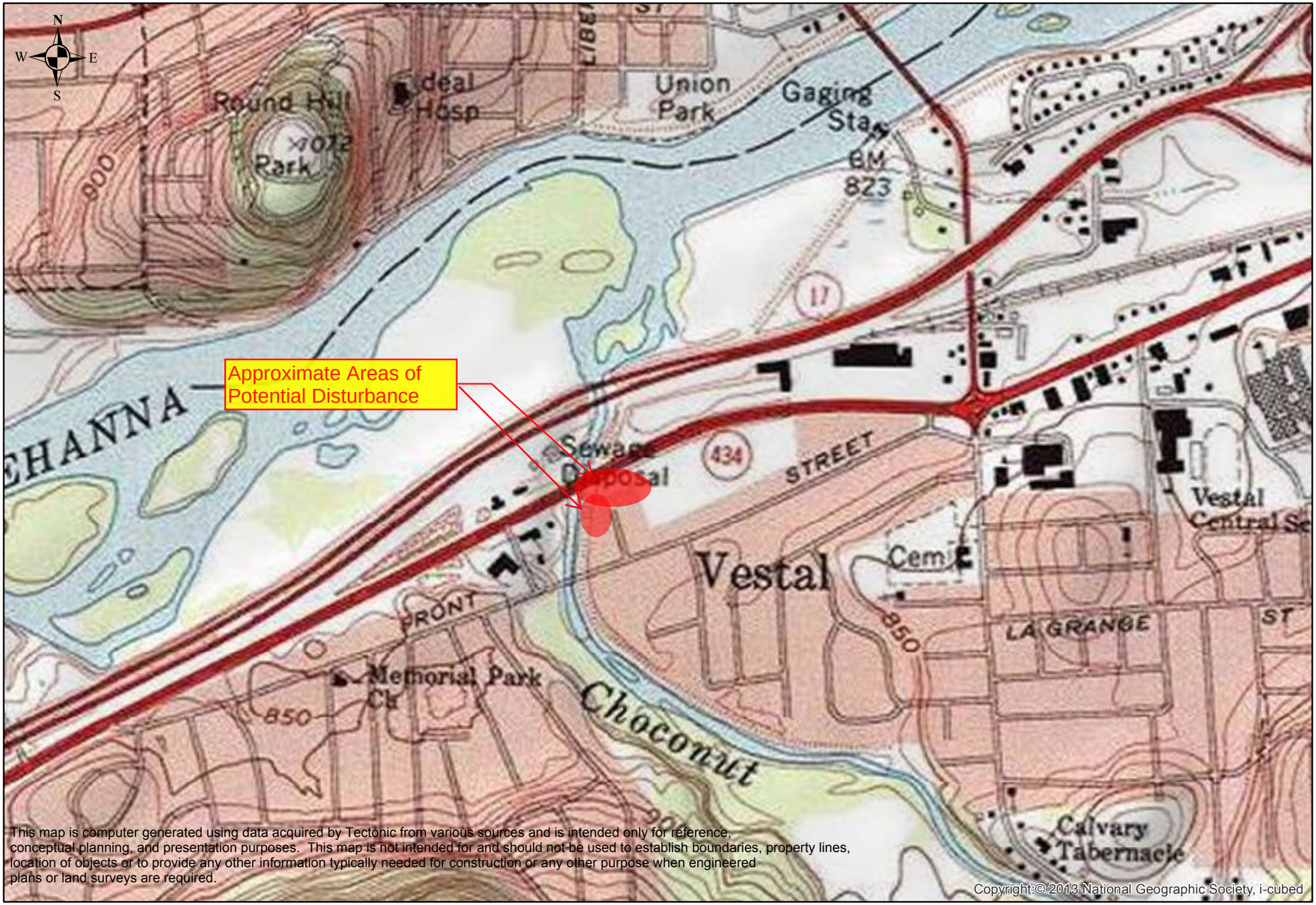

This map is computer generated using data acquired by Tectonic from various sources and is intended only for reference, conceptual planning, and presentation purposes. This map is not intended for and should not be used to establish boundaries, property lines, location of objects or to provide any other information typically needed for construction or any other purpose when engineered plans or land surveys are required.

Copyright:© 2013 National Geographic Society, i-cubed

TECTONIC
Practical Solutions, Exceptional Service

TECTONIC
70 Pleasant Hill Road,
Mountainville, N.Y. 10953
845.534.5959 voice 845.534-5999 fax
www.tectonicengineering.com

0 0.125 0.25 0.5 Miles

Topographic Map
Robert Street Stormwater Pump Station Upgrade
Town of Vestal, NY

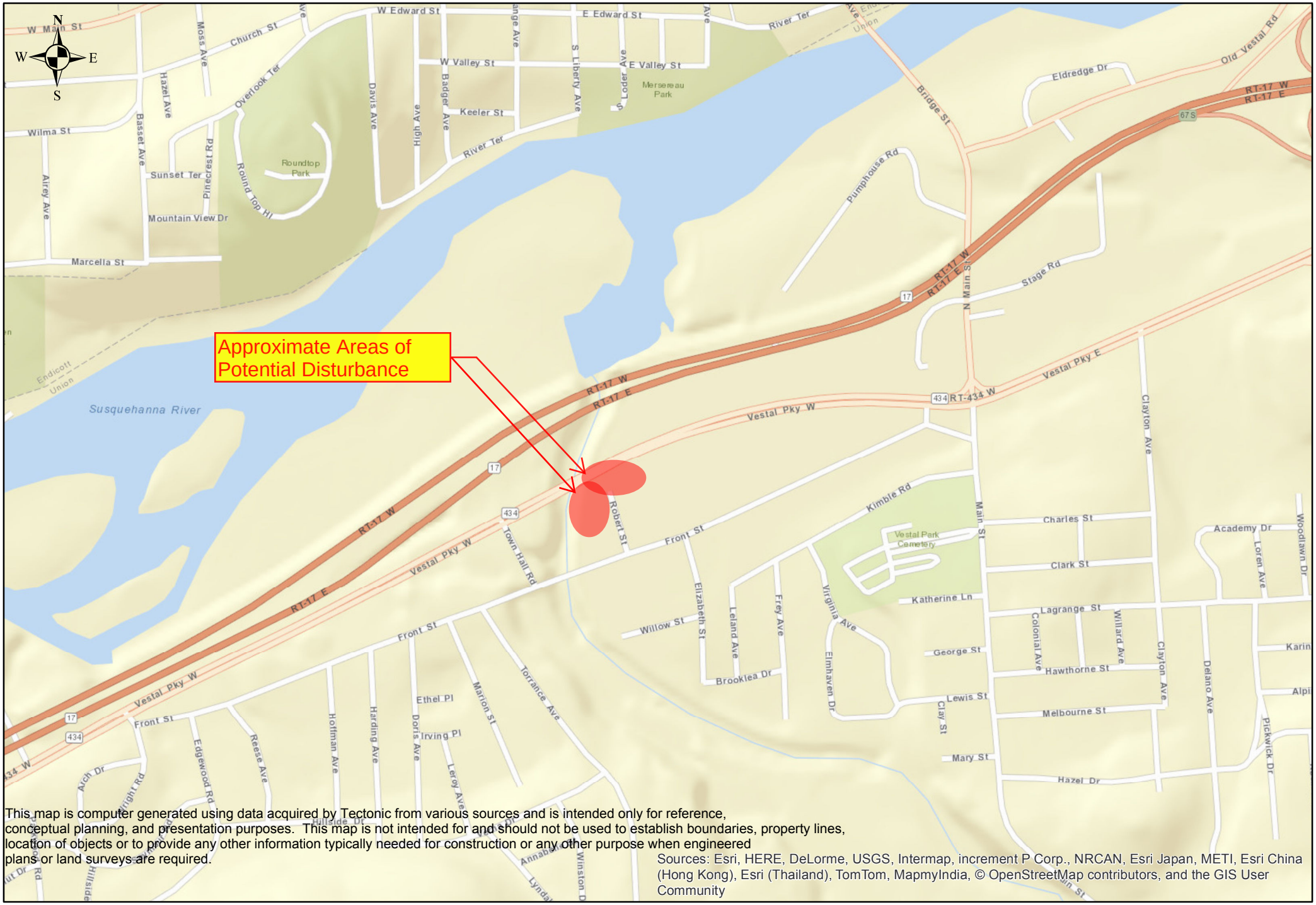

This map is computer generated using data acquired by Tectonic from various sources and is intended only for reference, conceptual planning, and presentation purposes. This map is not intended for and should not be used to establish boundaries, property lines, location of objects or to provide any other information typically needed for construction or any other purpose when engineered plans or land surveys are required.

Sources: Esri, HERE, DeLorme, USGS, Intermap, increment P Corp., NRCAN, Esri Japan, METI, Esri China (Hong Kong), Esri (Thailand), TomTom, MapmyIndia, © OpenStreetMap contributors, and the GIS User Community

TECTONIC
Practical Solutions, Exceptional Service

TECTONIC
70 Pleasant Hill Road,
Mountainville, N.Y. 10953
845.534.5959 voice 845.534-5999 fax
www.tectonicengineering.com

0 0.125 0.25 0.5 Miles

Street Map
Robert Street Stormwater Pump Station Upgrade
Town of Vestal, NY

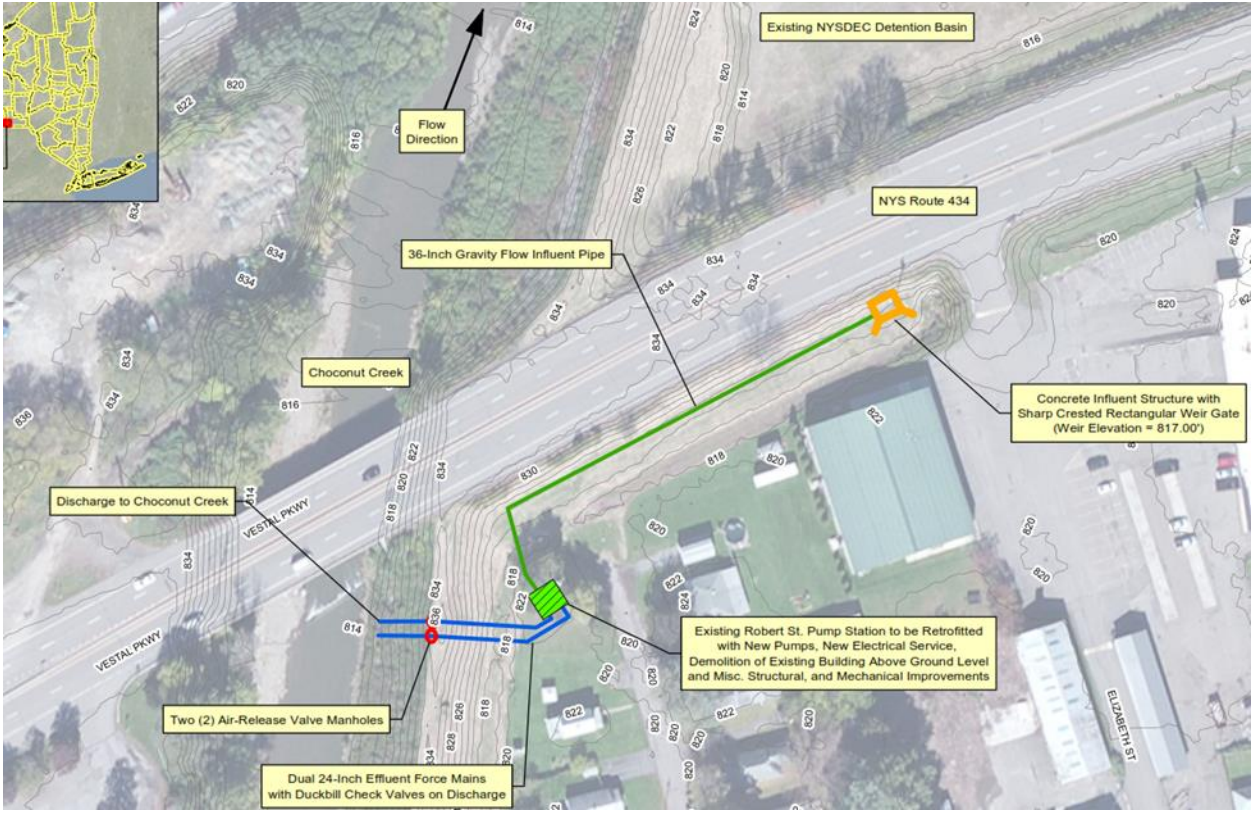
Existing NYSDEC Detention Basin
Flow Direction
NYS Route 434
36-Inch Gravity Flow Influent Pipe
Choconut Creek
Concrete Influent Structure with Sharp Crested Rectangular Weir Gate (Weir Elevation = 817.00')
Discharge to Choconut Creek
VESTAL PKWY
VESTAL PKWY
Existing Robert St. Pump Station to be Retrofitted with New Pumps, New Electrical Service, Demolition of Existing Building Above Ground Level and Misc. Structural, and Mechanical Improvements
Two (2) Air-Release Valve Manholes
Dual 24-Inch Effluent Force Mains with Duckbill Check Valves on Discharge
ELIZABETH ST

Proposed site of 36 inch Gravity Flow Influent Pipe
01/09/2015 12:21

January 19, 2016

Kerry Holton, President
Delaware Nation
P.O. Box 825
Anadarko, OK 73005

Re: Section 106 Discussion
CDBG-DR, NYRCR Robert Street Stormwater Pump Station Upgrade
Town of Vestal, Broome County, NY

Dear Kerry Holton,

Pursuant to the Disaster Relief Appropriations Act, 2013 (Public Law 113-2) and the Housing and Community Development Act (42 U.S.C. § 5301 et seq.), the Governor's Office of Storm Recovery (GOSR) is acting under the auspices of New York State Homes and Community Renewal's Housing Trust Fund Corporation as a recipient of Community Development Block Grant – Disaster Recovery ("CDBG-DR") funds from the United States Department of Housing and Urban Development ("HUD"). GOSR is the entity responsible for compliance with the HUD environmental review procedures set forth in 24 CFR Part 58. GOSR is acting on behalf of HUD in providing the enclosed project information and inviting this discussion with your Nation to respond with any concerns or comments.

GOSR processes environmental reviews for projects funded with HUD CDBG-DR on a case-by-case basis. GOSR proposes to provide grant funding for the rehabilitation and improvements to convert a defunct sanitary sewer pump station to a stormwater pump station in the Town of Vestal, Broome County, New York. In accordance with Section 101(d)(6)(B) of the National Historic Preservation Act of 1966, as amended (16 U.S.C. 470a), and its implementing regulations, 36 Code of Federal Regulations (CFR) Part 800, this letter serves as notification of the proposed action. This consultation is being sent to the Delaware Nation, Delaware Tribe of Indians, Oneida Indian Nation, Onondaga Nation, Stockbridge-Munsee Community Band of Mohicans, and the Tuscarora Nation of New York.

Area of Potential Effect: The existing Robert Street Pump Station is located in the Town of Vestal, New York and is adjacent to the northwest limit of a dead-end street, Robert Street. The proposed project location would include the area near the northwestern boundary of Elizabeth Street and continue adjacent to NYS Route 434, along the existing right of way, to the Robert Street Pump Station. It will also include the area between the pump station and the Choconut Creek.

Proposed Project Description: The project will involve the construction of a 36-inch diameter gravity flow influent pipe that will run adjacent to NYS Route 434. This pipe will run from a proposed concrete influent structure that will be built near the northwestern limit of Elizabeth Street. Included

in this structure will be a sharp crested rectangular weir gate to control flow diverted to the pump station. Electrical service is also proposed to be installed underground from a nearby 3-phase utility pole located adjacent to NYS Route 434. The electric service is proposed to run along the area of the concrete influent structure and follow underground within the vicinity of the 36-inch diameter gravity flow influent pipe to the existing Robert Street Pump Station. The above-grade structure of the pump station will be demolished and a pavilion-type structure will replace it to protect the rehabilitated pump station. The infrastructure within the below-grade levels of the pump station will be replaced including retrofitting the station with new pumps and new electrical service. Miscellaneous structural and mechanical improvements will also be completed. From the existing Robert Street Pump Station, dual 24-inch effluent force mains with duckbill check valves at the discharge points are proposed to lead from the pump house to discharge into Choconut Creek. Two air release valve manholes will also be constructed along these force main lines. The stormwater pump station would pump stormwater over the flood levee to the Choconut Creek to reduce the reoccurrence of flooding in the Robert Street neighborhood.

Proposed rehabilitation work and construction is within the limits of a previously disturbed areas, including the area of the existing pump station, the area of the levee along Choconut Creek, and the area at the toe of the slope adjacent to the 4-lane NYS Route 434. The proposed action lies in the right of way of four-lane NYS 434, historically used as two-lane NYS Route 17. The Town of Vestal has a 15" diameter RCP sanitary sewer line that runs parallel and between NYS Route 434, therefore, previous disturbance for sewer trenching and roadway work has occurred in this area. Thus, the proposed work is expected to occur entirely in previously disturbed location. If there is any unanticipated discovery of artifacts or cultural resources during the construction, work will halt immediately for an archeological survey and interested parties would be notified.

GOSR is completing an environmental review for this project pursuant to HUD NEPA regulations. If the Area of Potential Effect encompasses historic properties of religious or cultural significance to your Nation, please respond within 20 days or sooner. Additionally, please indicate if there are other sources of information or other parties, Nations, Tribes, or members of the public you believe should be included in the consultation process. Please respond by email or in writing to the address listed below.

Thomas J. King, Esq.
Deputy General Counsel and Certifying Officer
Governor's Office of Storm Recovery
99 Washington Avenue
Suite 1224
Albany, New York 12260

I am available to answer any questions that you may have regarding this action. If you have any questions, please feel free to contact me at (518) 473-0015 or via email at Thomas.King@stormrecovery.ny.gov.

Sincerely,

Thomas J. King, Esq.
Deputy General Counsel and Certifying Officer
Governor's Office of Storm Recovery

Enclosures:
Site Maps (Topographic & Street Maps)
Site Plan

Electronic letter sent to:
Nekole Alligood, Cultural Preservation Director
Delaware Nation
P.O. Box 825
Anadarko, OK 73005

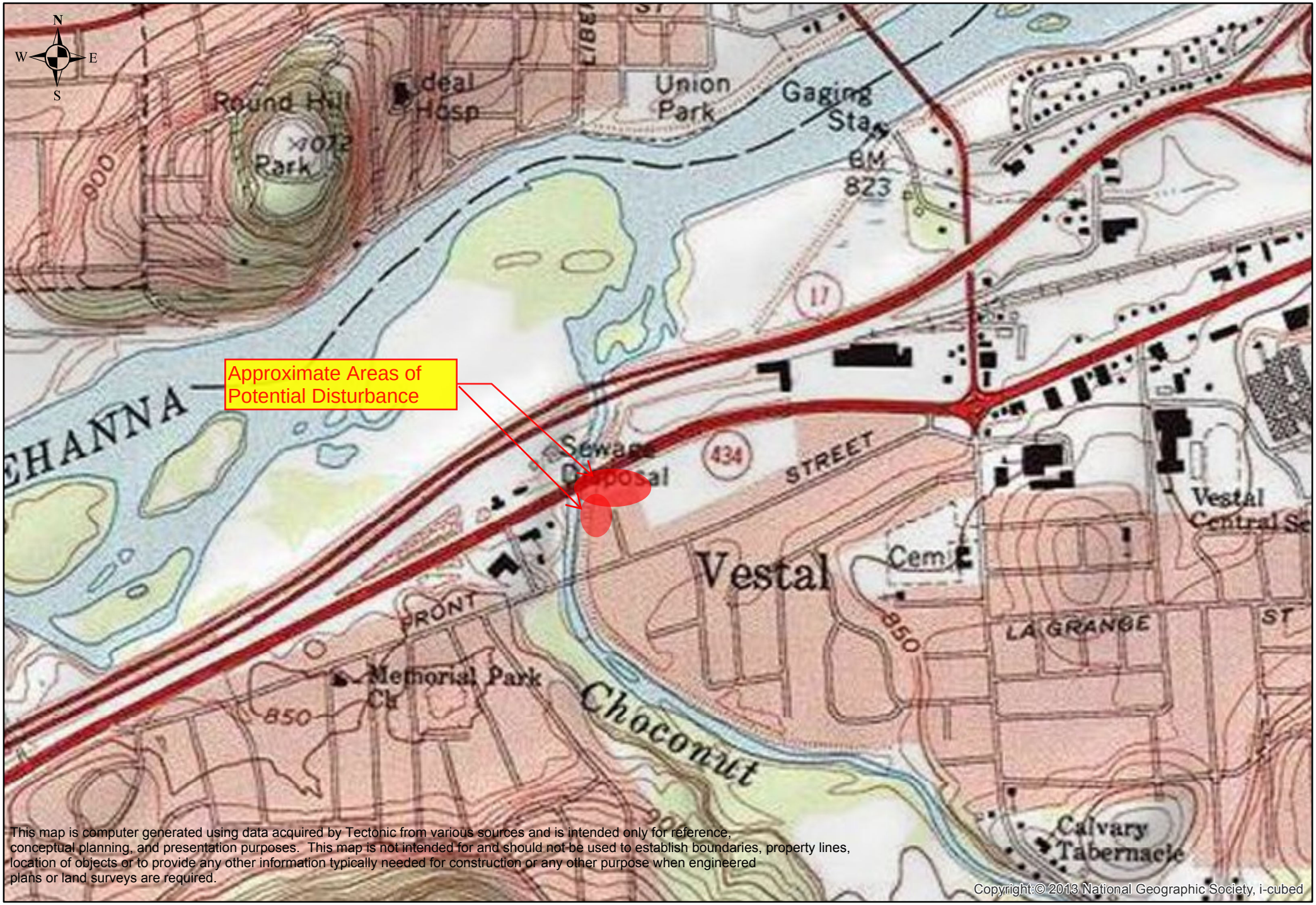

This map is computer generated using data acquired by Tectonic from various sources and is intended only for reference, conceptual planning, and presentation purposes. This map is not intended for and should not be used to establish boundaries, property lines, location of objects or to provide any other information typically needed for construction or any other purpose when engineered plans or land surveys are required.

Copyright:© 2013 National Geographic Society, i-cubed

TECTONIC
Practical Solutions, Exceptional Service

TECTONIC
70 Pleasant Hill Road,
Mountainville, N.Y. 10953
845.534.5959 voice 845.534-5999 fax
www.tectonicengineering.com

0 0.125 0.25 0.5 Miles

Topographic Map
Robert Street Stormwater Pump Station Upgrade
Town of Vestal, NY

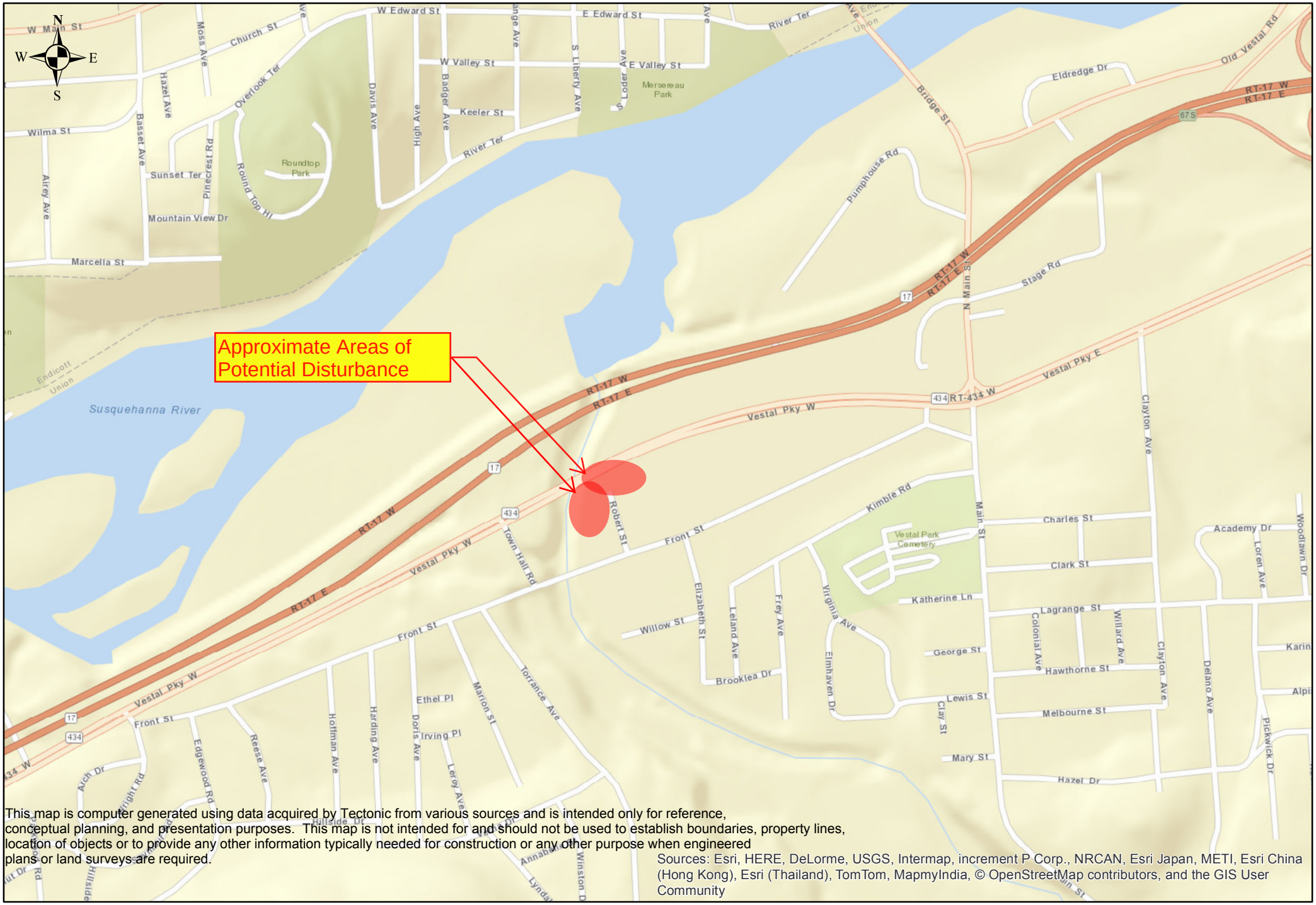

This map is computer generated using data acquired by Tectonic from various sources and is intended only for reference, conceptual planning, and presentation purposes. This map is not intended for and should not be used to establish boundaries, property lines, location of objects or to provide any other information typically needed for construction or any other purpose when engineered plans or land surveys are required.

Sources: Esri, HERE, DeLorme, USGS, Intermap, increment P Corp., NRCAN, Esri Japan, METI, Esri China (Hong Kong), Esri (Thailand), TomTom, MapmyIndia, © OpenStreetMap contributors, and the GIS User Community

TECTONIC
Practical Solutions, Exceptional Service

TECTONIC
70 Pleasant Hill Road,
Mountainville, N.Y. 10953
845.534.5959 voice 845.534-5999 fax
www.tectonicengineering.com

0 0.125 0.25 0.5 Miles

Street Map
Robert Street Stormwater Pump Station Upgrade
Town of Vestal, NY

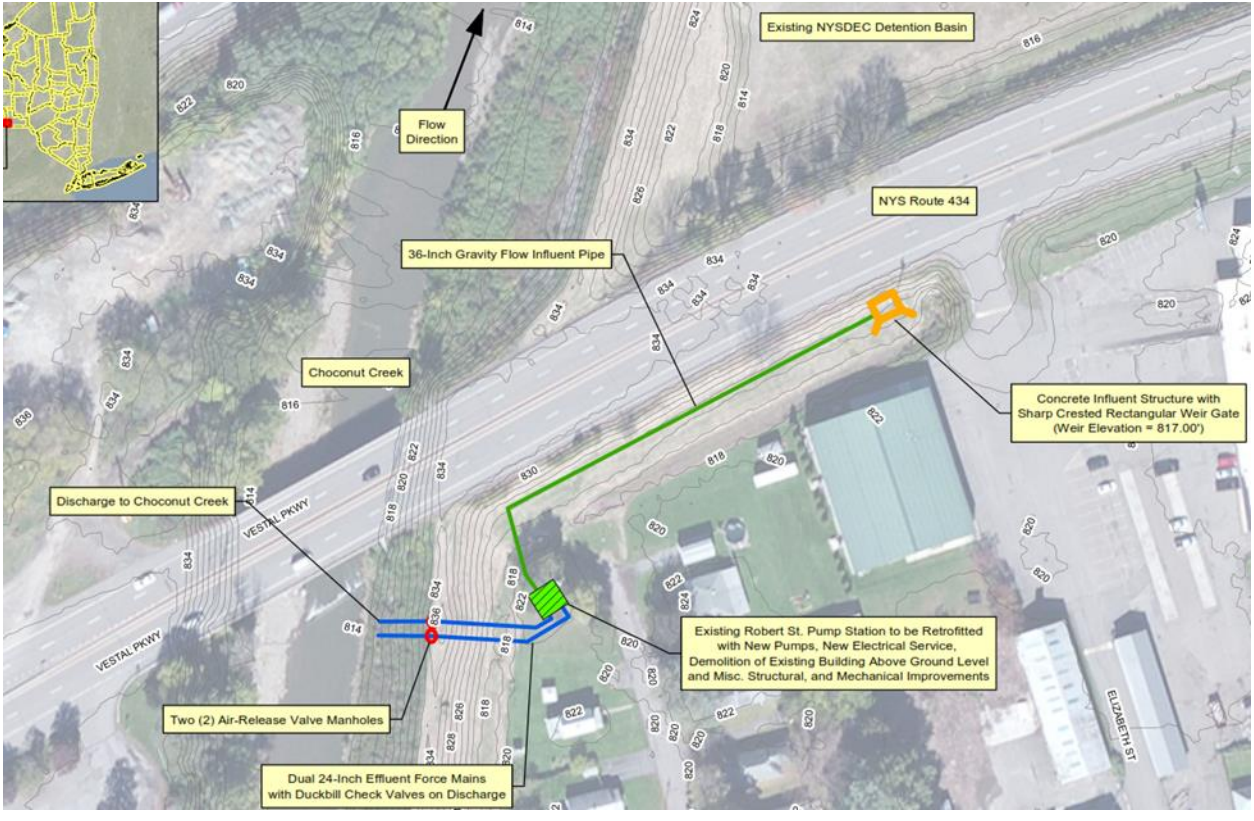
Existing NYSDEC Detention Basin
Flow Direction
NYS Route 434
36-Inch Gravity Flow Influent Pipe
Choconut Creek
Concrete Influent Structure with Sharp Crested Rectangular Weir Gate (Weir Elevation = 817.00')
Discharge to Choconut Creek
VESTAL PKWY
VESTAL PKWY
Existing Robert St. Pump Station to be Retrofitted with New Pumps, New Electrical Service, Demolition of Existing Building Above Ground Level and Misc. Structural, and Mechanical Improvements
Two (2) Air-Release Valve Manholes
Dual 24-Inch Effluent Force Mains with Duckbill Check Valves on Discharge
ELIZABETH ST

Proposed site of 36 inch Gravity Flow Influent Pipe
01/09/2015 12:21

January 19, 2016

Chet Brooks, Chief
Delaware Tribe of Indians, Delaware Tribal Headquarters
5100 Tuxedo Blvd
Bartlesville, OK 74006

Re: Section 106 Discussion
CDBG-DR, NYRCR Robert Street Stormwater Pump Station Upgrade
Town of Vestal, Broome County, NY

Dear Mr. Brooks,

Pursuant to the Disaster Relief Appropriations Act, 2013 (Public Law 113-2) and the Housing and Community Development Act (42 U.S.C. § 5301 et seq.), the Governor's Office of Storm Recovery (GOSR) is acting under the auspices of New York State Homes and Community Renewal's Housing Trust Fund Corporation as a recipient of Community Development Block Grant – Disaster Recovery ("CDBG-DR") funds from the United States Department of Housing and Urban Development ("HUD"). GOSR is the entity responsible for compliance with the HUD environmental review procedures set forth in 24 CFR Part 58. GOSR is acting on behalf of HUD in providing the enclosed project information and inviting this discussion with your Tribe to respond with any concerns or comments.

GOSR processes environmental reviews for projects funded with HUD CDBG-DR on a case-by-case basis. GOSR proposes to provide grant funding for the rehabilitation and improvements to convert a defunct sanitary sewer pump station to a stormwater pump station in the Town of Vestal, Broome County, New York. In accordance with Section 101(d)(6)(B) of the National Historic Preservation Act of 1966, as amended (16 U.S.C. 470a), and its implementing regulations, 36 Code of Federal Regulations (CFR) Part 800, this letter serves as notification of the proposed action. This consultation is being sent to the Delaware Nation, Delaware Tribe of Indians, Oneida Indian Nation, Onondaga Nation, Stockbridge-Munsee Community Band of Mohicans, and the Tuscarora Nation of New York.

Area of Potential Effect: The existing Robert Street Pump Station is located in the Town of Vestal, New York and is adjacent to the northwest limit of a dead-end street, Robert Street. The proposed project location would include the area near the northwestern boundary of Elizabeth Street and continue adjacent to NYS Route 434, along the existing right of way, to the Robert Street Pump Station. It will also include the area between the pump station and the Choconut Creek.

Proposed Project Description: The project will involve the construction of a 36-inch diameter gravity flow influent pipe that will run adjacent to NYS Route 434. This pipe will run from a proposed concrete influent structure that will be built near the northwestern limit of Elizabeth Street. Included in this structure will be a sharp crested rectangular weir gate to control flow diverted to the pump

station. Electrical service is also proposed to be installed underground from a nearby 3-phase utility pole located adjacent to NYS Route 434. The electric service is proposed to run along the area of the concrete influent structure and follow underground within the vicinity of the 36-inch diameter gravity flow influent pipe to the existing Robert Street Pump Station. The above-grade structure of the pump station will be demolished and a pavilion-type structure will replace it to protect the rehabilitated pump station. The infrastructure within the below-grade levels of the pump station will be replaced including retrofitting the station with new pumps and new electrical service. Miscellaneous structural and mechanical improvements will also be completed. From the existing Robert Street Pump Station, dual 24-inch effluent force mains with duckbill check valves at the discharge points are proposed to lead from the pump house to discharge into Choconut Creek. Two air release valve manholes will also be constructed along these force main lines. The stormwater pump station would pump stormwater over the flood levee to the Choconut Creek to reduce the reoccurrence of flooding in the Robert Street neighborhood.

Proposed rehabilitation work and construction is within the limits of a previously disturbed areas, including the area of the existing pump station, the area of the levee along Choconut Creek, and the area at the toe of the slope adjacent to the 4-lane NYS Route 434. The proposed action lies in the right of way of four-lane NYS 434, historically used as two-lane NYS Route 17. The Town of Vestal has a 15" diameter RCP sanitary sewer line that runs parallel and between NYS Route 434, therefore, previous disturbance for sewer trenching and roadway work has occurred in this area. Thus, the proposed work is expected to occur entirely in previously disturbed location. If there is any unanticipated discovery of artifacts or cultural resources during the construction, work will halt immediately for an archeological survey and interested parties would be notified.

GOSR is completing an environmental review for this project pursuant to HUD NEPA regulations. If the Area of Potential Effect encompasses historic properties of religious or cultural significance to your Tribe, please respond within 20 days or sooner. Additionally, please indicate if there are other sources of information or other parties, Nations, Tribes, or members of the public you believe should be included in the consultation process. Please respond by email or in writing to the address listed below.

Thomas J. King, Esq.
Deputy General Counsel and Certifying Officer
Governor's Office of Storm Recovery
99 Washington Avenue
Suite 1224
Albany, New York 12260

I am available to answer any questions that you may have regarding this action. If you have any questions, please feel free to contact me at (518) 473-0015 or via email at Thomas.King@stormrecovery.ny.gov.

Sincerely,

Thomas J. King, Esq.
Deputy General Counsel and Certifying Officer
Governor's Office of Storm Recovery

Enclosures:
Site Maps (Topographic & Street Maps)
Site Plan

Electronic and hard copy letter sent to:
Susan Bachor
Delaware Tribe of Indians Historic Preservation Representative
P.O. Box 64
Pocono Lake, PA 73005

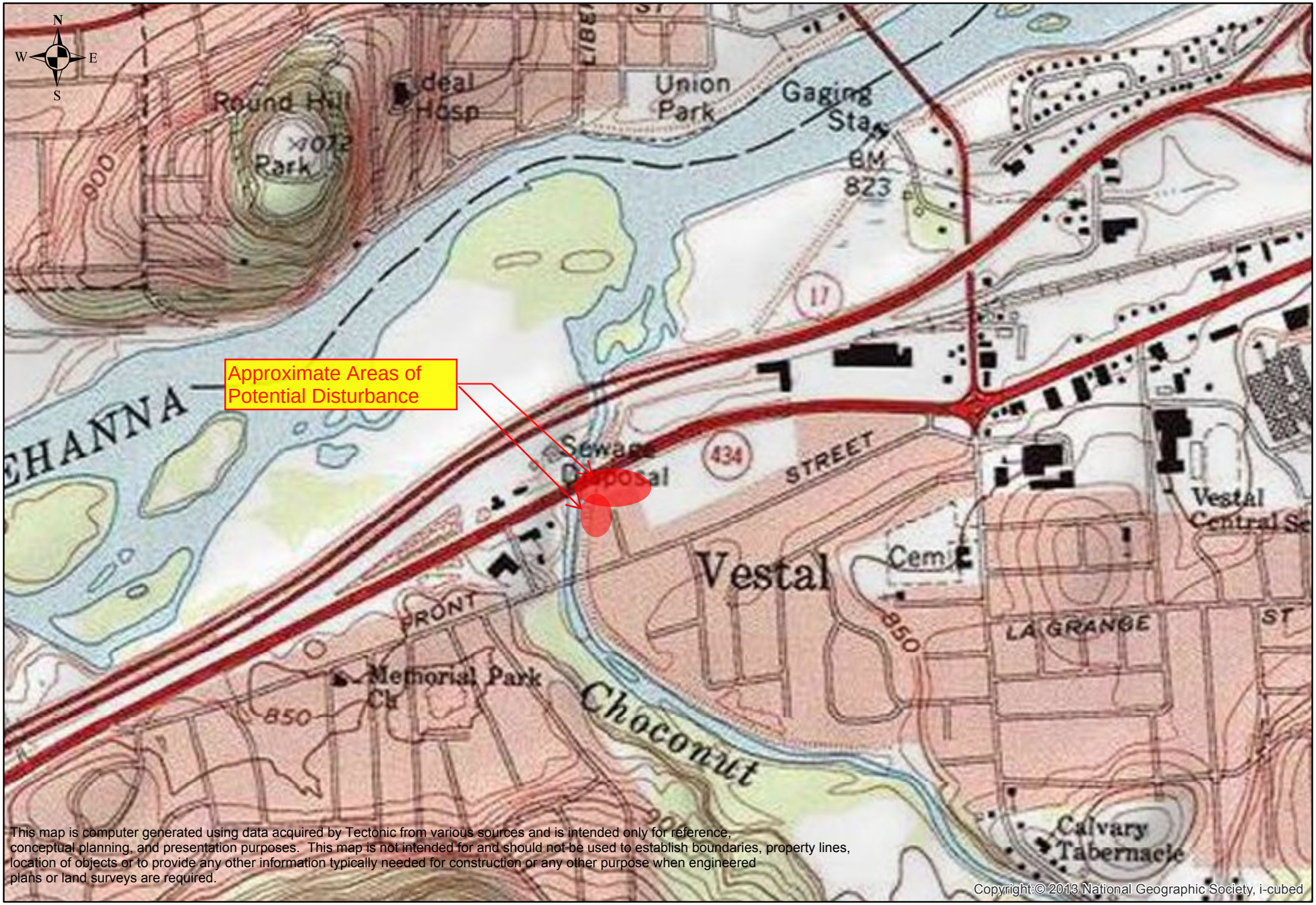

This map is computer generated using data acquired by Tectonic from various sources and is intended only for reference, conceptual planning, and presentation purposes. This map is not intended for and should not be used to establish boundaries, property lines, location of objects or to provide any other information typically needed for construction or any other purpose when engineered plans or land surveys are required.

Copyright:© 2013 National Geographic Society, i-cubed

TECTONIC
Practical Solutions, Exceptional Service

TECTONIC
70 Pleasant Hill Road,
Mountainville, N.Y. 10953
845.534.5959 voice 845.534-5999 fax
www.tectonicengineering.com

0 0.125 0.25 0.5 Miles

Topographic Map
Robert Street Stormwater Pump Station Upgrade
Town of Vestal, NY

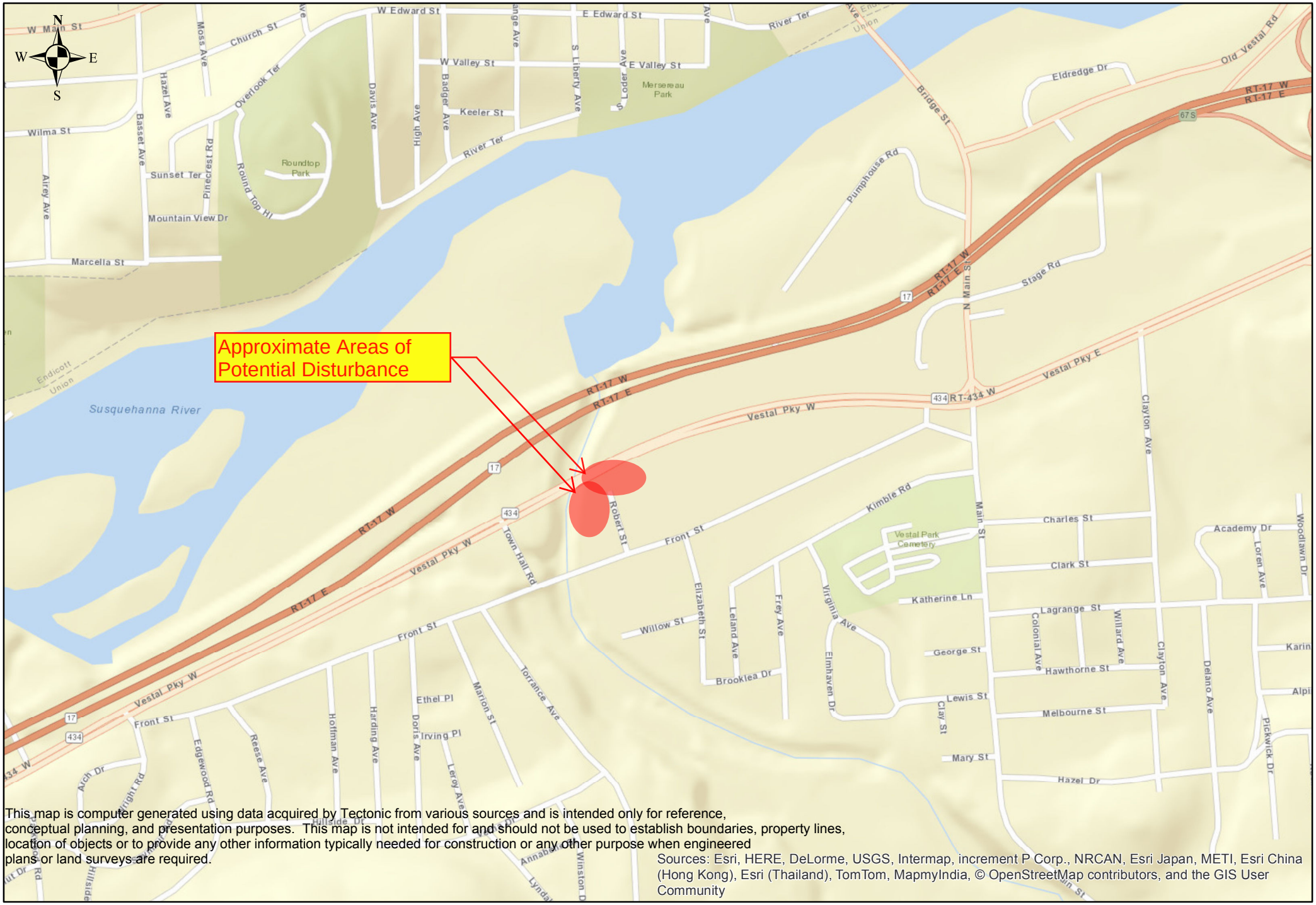

This map is computer generated using data acquired by Tectonic from various sources and is intended only for reference, conceptual planning, and presentation purposes. This map is not intended for and should not be used to establish boundaries, property lines, location of objects or to provide any other information typically needed for construction or any other purpose when engineered plans or land surveys are required.

Sources: Esri, HERE, DeLorme, USGS, Intermap, increment P Corp., NRCAN, Esri Japan, METI, Esri China (Hong Kong), Esri (Thailand), TomTom, MapmyIndia, © OpenStreetMap contributors, and the GIS User Community

TECTONIC
Practical Solutions, Exceptional Service

TECTONIC
70 Pleasant Hill Road,
Mountainville, N.Y. 10953
845.534.5959 voice 845.534-5999 fax
www.tectonicengineering.com

0 0.125 0.25 0.5 Miles

Street Map
Robert Street Stormwater Pump Station Upgrade
Town of Vestal, NY

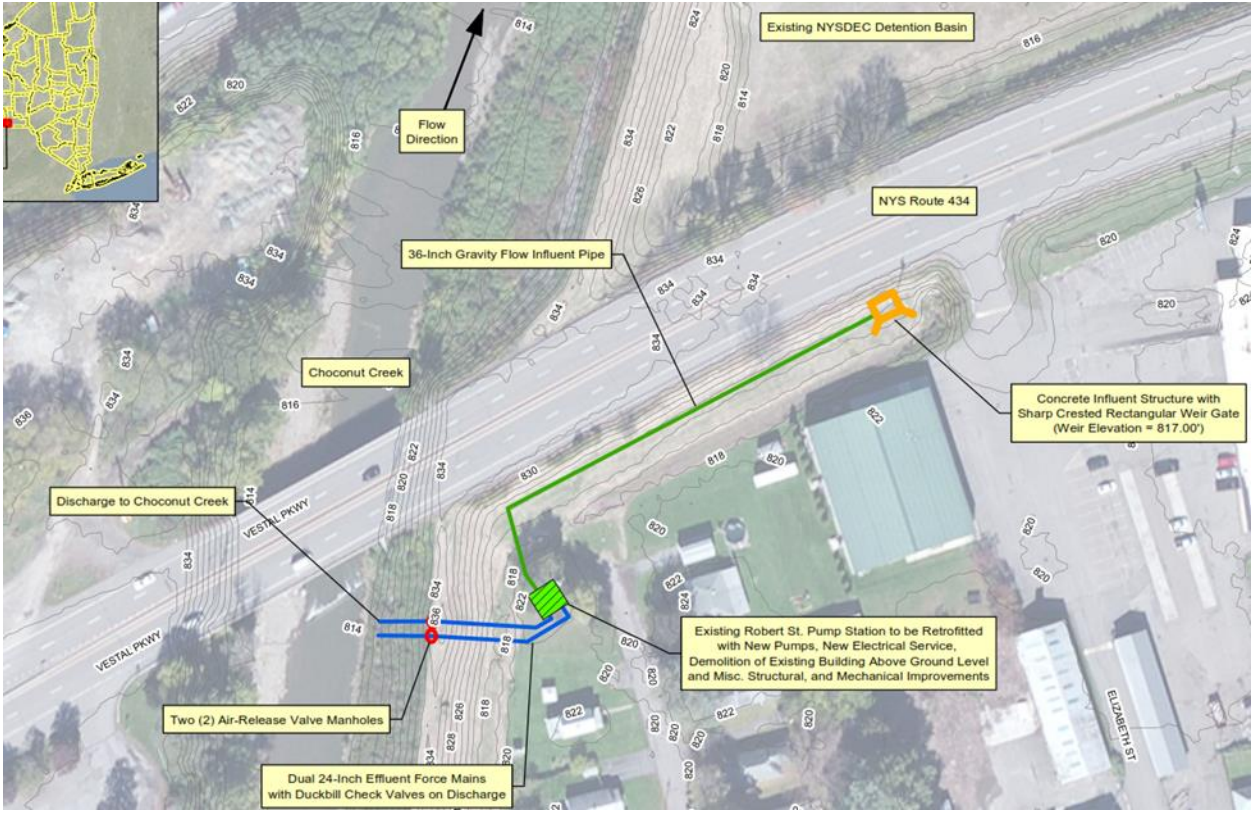
Existing NYSDEC Detention Basin
Flow Direction
NYS Route 434
36-Inch Gravity Flow Influent Pipe
Choconut Creek
Concrete Influent Structure with Sharp Crested Rectangular Weir Gate (Weir Elevation = 817.00')
Discharge to Choconut Creek
VESTAL PKWY
VESTAL PKWY
Existing Robert St. Pump Station to be Retrofitted with New Pumps, New Electrical Service, Demolition of Existing Building Above Ground Level and Misc. Structural, and Mechanical Improvements
Two (2) Air-Release Valve Manholes
Dual 24-Inch Effluent Force Mains with Duckbill Check Valves on Discharge
ELIZABETH ST

Proposed site of 36 inch Gravity Flow Influent Pipe
01/09/2015 12:21

April 22, 2016

William Fisher, Chief
Seneca-Cayuga Nation
PO Box 453220
Grove, OK 74345-3220

Re: Section 106 Discussion CDBG-DR, NYRCR Robert Street Stormwater Pump Station Upgrade
Town of Vestal, Broome County, New York

Dear Chief William Fisher,

Pursuant to the Disaster Relief Appropriations Act, 2013 (Public Law 113-2) and the Housing and Community Development Act (42 U.S.C. § 5301 et seq.), the Governor's Office of Storm Recovery (GOSR) is acting under the auspices of New York State Homes and Community Renewal's Housing Trust Fund Corporation as a recipient of Community Development Block Grant – Disaster Recovery ("CDBG-DR") funds from the United States Department of Housing and Urban Development ("HUD"). GOSR is the entity responsible for compliance with the HUD environmental review procedures set forth in 24 CFR Part 58. GOSR is acting on behalf of HUD in providing the enclosed project information and inviting this discussion with your Nation to respond with any concerns or comments.

GOSR processes environmental reviews for projects funded with HUD CDBG-DR on a case-by-case basis. GOSR proposes to provide grant funding for the rehabilitation and improvements to convert a defunct sanitary sewer pump station to a stormwater pump station in the Town of Vestal, Broome County, New York. In accordance with Section 101(d)(6)(B) of the National Historic Preservation Act of 1966, as amended (16 U.S.C. 470a), and its implementing regulations, 36 Code of Federal Regulations (CFR) Part 800, this letter serves as notification of the proposed action. This consultation is being sent to the Delaware Nation, Delaware Tribe of Indians, Oneida Indian Nation, Onondaga Nation, Stockbridge-Munsee Community Band of Mohicans, and the Tuscarora Nation of New York, and the Seneca-Cayuga Nation.

Area of Potential Effect: The existing Robert Street Pump Station is located in the Town of Vestal, New York and is adjacent to the northwest limit of a dead-end street, Robert Street. The proposed project location would include the area near the northwestern boundary of Elizabeth Street and continue adjacent to NYS Route 434, along the existing right of way, to the Robert Street Pump Station. It will also include the area between the pump station and the Choconut Creek.

Proposed Project Description: The project will involve the construction of a 36-inch diameter gravity flow influent pipe that will run adjacent to NYS Route 434. This pipe will run from a proposed concrete influent structure that will be built near the northwestern limit of Elizabeth Street. Included in this structure will be a sharp crested rectangular weir gate to control flow diverted to the pump

station. Electrical service is also proposed to be installed underground from a nearby 3-phase utility pole located adjacent to NYS Route 434. The electric service is proposed to run along the area of the concrete influent structure and follow underground within the vicinity of the 36-inch diameter gravity flow influent pipe to the existing Robert Street Pump Station. The above-grade structure of the pump station will be demolished and a pavilion-type structure will replace it to protect the rehabilitated pump station. The infrastructure within the below-grade levels of the pump station will be replaced including retrofitting the station with new pumps and new electrical service. Miscellaneous structural and mechanical improvements will also be completed. From the existing Robert Street Pump Station, dual 24-inch effluent force mains with duckbill check valves at the discharge points are proposed to lead from the pump house to discharge into Choconut Creek. Two air release valve manholes will also be constructed along these force main lines. The stormwater pump station would pump stormwater over the flood levee to the Choconut Creek to reduce the reoccurrence of flooding in the Robert Street neighborhood.

Proposed rehabilitation work and construction is within the limits of a previously disturbed areas, including the area of the existing pump station, the area of the levee along Choconut Creek, and the area at the toe of the slope adjacent to the 4-lane NYS Route 434. The proposed action lies in the right of way of four-lane NYS 434, historically used as two-lane NYS Route 17. The Town of Vestal has a 15" diameter RCP sanitary sewer line that runs parallel and between NYS Route 434, therefore, previous disturbance for sewer trenching and roadway work has occurred in this area. Thus, the proposed work is expected to occur entirely in previously disturbed location. If there is any unanticipated discovery of artifacts or cultural resources during the construction, work will halt immediately for an archeological survey and interested parties would be notified.

Pursuant to NHPA Section 106, GOSR has initiated consultation with the State Historic Preservation Office (SHPO) concerning this Project and its potential to affect historic resources that are listed on or eligible for listing on the NRHP. The SHPO has determined that the project will have No Affect on Historic Properties. GOSR is completing an environmental review for this project pursuant to HUD NEPA regulations. If the Area of Potential Effect encompasses historic properties of religious or cultural significance to your Nation, please respond within 20 days or sooner. Additionally, please indicate if there are other sources of information or other parties, Nations, Tribes, or members of the public you believe should be included in the consultation process. Please respond by email or in writing to the address listed below.

Thomas J. King, Esq.
Deputy General Counsel and Certifying Officer
Governor's Office of Storm Recovery
99 Washington Avenue
Suite 1224
Albany, New York 12260

I am available to answer any questions that you may have regarding this action. If you have any questions, please feel free to contact me at (518) 473-0015 or via email at Thomas.King@stormrecovery.ny.gov.

Sincerely,

Thomas J. King, Esq.
Deputy General Counsel and Certifying Officer
Governor's Office of Storm Recovery

Enclosures:
Site Maps (Topographic & Street Maps)
Site Plan
SHPO Determination

Electronic letter sent to:
Paul Barton, THPO Representative
Seneca-Cayuga Nation
PO Box 453220
Grove, OK 74345-3220

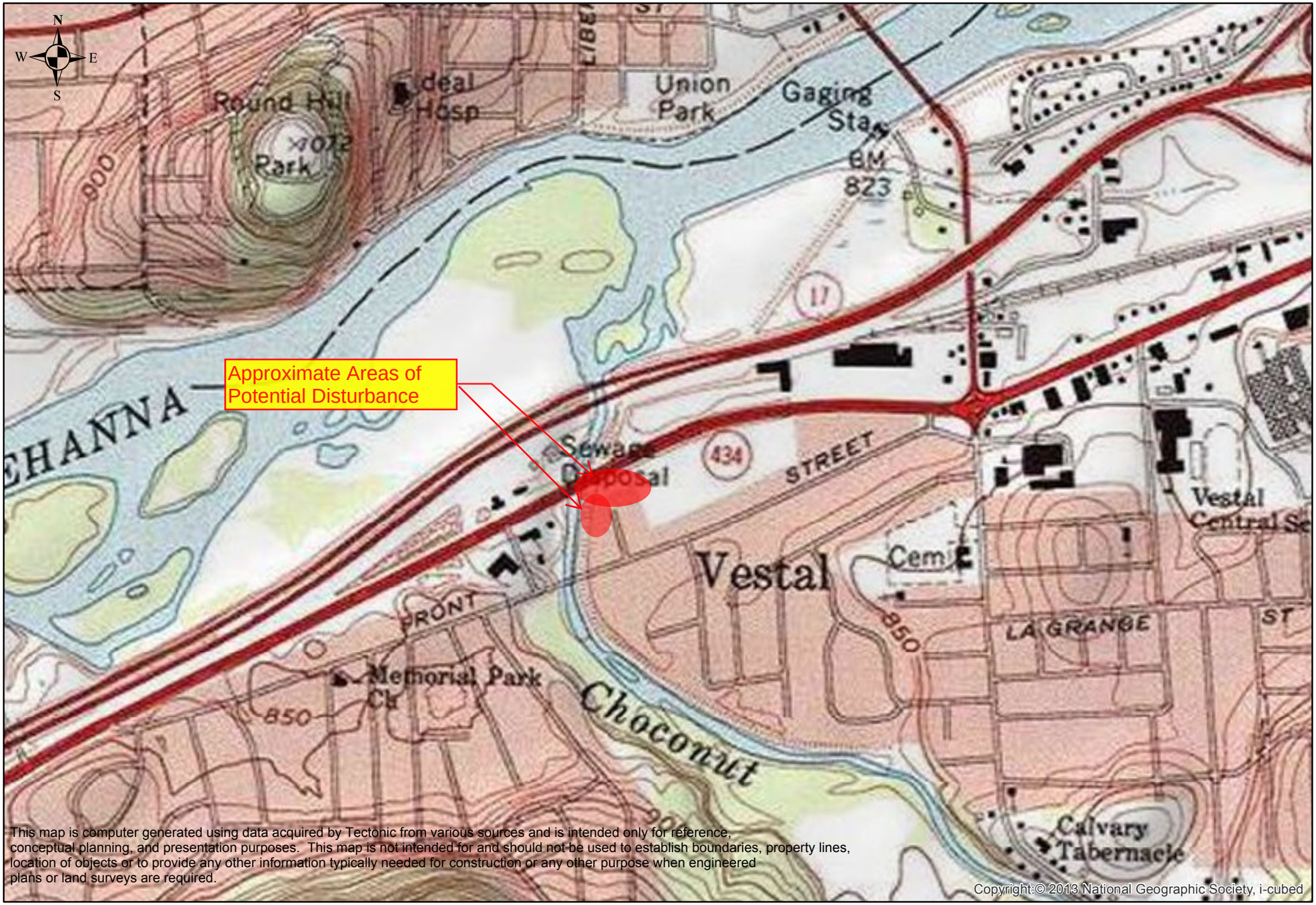

This map is computer generated using data acquired by Tectonic from various sources and is intended only for reference, conceptual planning, and presentation purposes. This map is not intended for and should not be used to establish boundaries, property lines, location of objects or to provide any other information typically needed for construction or any other purpose when engineered plans or land surveys are required.

Copyright:© 2013 National Geographic Society, i-cubed

TECTONIC
Practical Solutions, Exceptional Service

TECTONIC
70 Pleasant Hill Road,
Mountainville, N.Y. 10953
845.534.5959 voice 845.534-5999 fax
www.tectonicengineering.com

0 0.125 0.25 0.5 Miles

Topographic Map
Robert Street Stormwater Pump Station Upgrade
Town of Vestal, NY

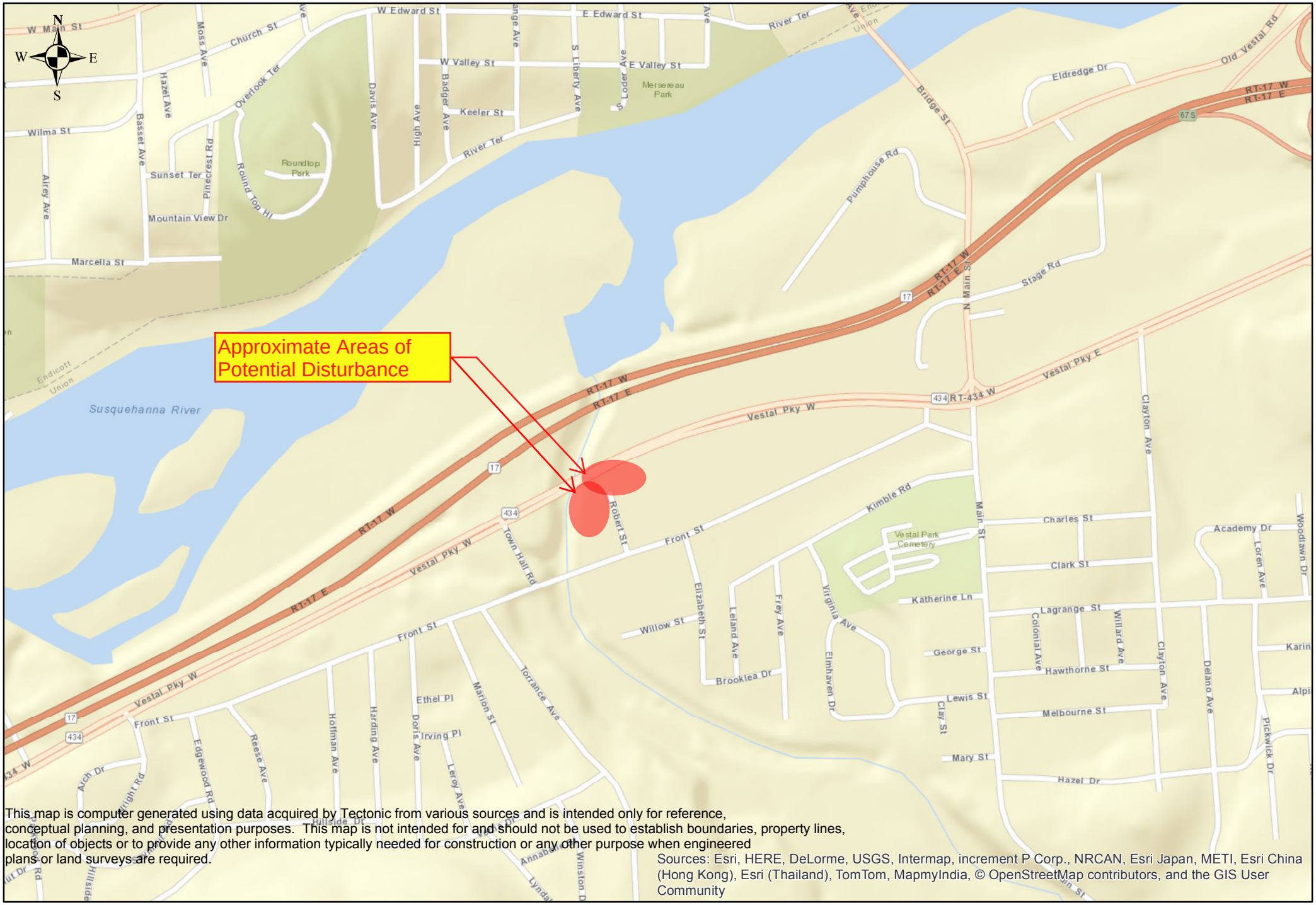

This map is computer generated using data acquired by Tectonic from various sources and is intended only for reference, conceptual planning, and presentation purposes. This map is not intended for and should not be used to establish boundaries, property lines, location of objects or to provide any other information typically needed for construction or any other purpose when engineered plans or land surveys are required.

Sources: Esri, HERE, DeLorme, USGS, Intermap, increment P Corp., NRCAN, Esri Japan, METI, Esri China (Hong Kong), Esri (Thailand), TomTom, MapmyIndia, © OpenStreetMap contributors, and the GIS User Community

TECTONIC
Practical Solutions, Exceptional Service

TECTONIC
70 Pleasant Hill Road,
Mountainville, N.Y. 10953
845.534.5959 voice 845.534-5999 fax
www.tectonicengineering.com

0 0.125 0.25 0.5 Miles

Street Map
Robert Street Stormwater Pump Station Upgrade
Town of Vestal, NY

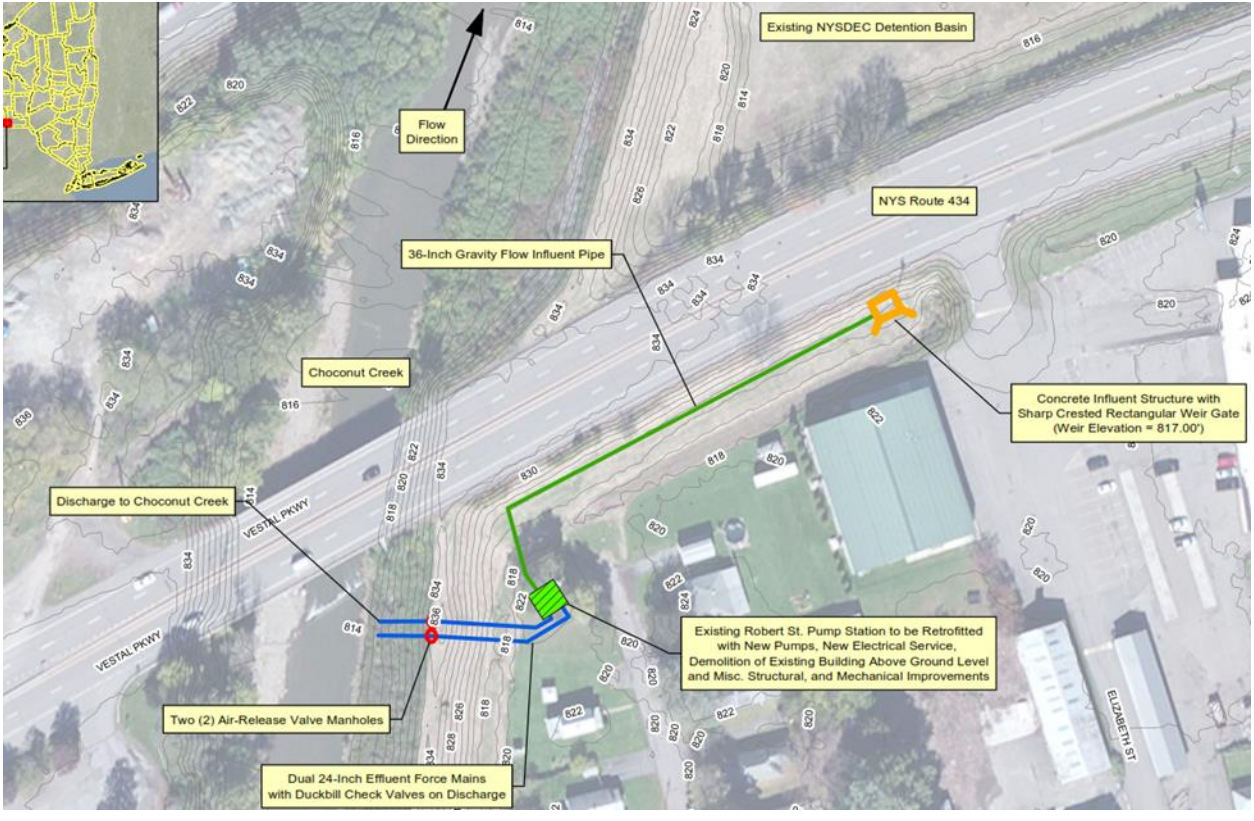
Existing NYSDEC Detention Basin
Flow Direction
NYS Route 434
36-Inch Gravity Flow Influent Pipe
Choconut Creek
Concrete Influent Structure with Sharp Crested Rectangular Weir Gate (Weir Elevation = 817.00')
Discharge to Choconut Creek
VESTAL PKWY
VESTAL PKWY
Existing Robert St. Pump Station to be Retrofitted with New Pumps, New Electrical Service, Demolition of Existing Building Above Ground Level and Misc. Structural, and Mechanical Improvements
Two (2) Air-Release Valve Manholes
Dual 24-Inch Effluent Force Mains with Duckbill Check Valves on Discharge
ELIZABETH ST

Proposed site of 36 inch Gravity Flow Influent Pipe
01/09/2015 12:21

January 19, 2016

Ray Halbritter, Nation Representative
Oneida Indian Nation
5218 Patrick Road
Verona, NY 13478

Re: Section 106 Discussion
CDBG-DR, NYRCR Robert Street Stormwater Pump Station Upgrade
Town of Vestal, Broome County, NY

Dear Mr. Halbritter,

Pursuant to the Disaster Relief Appropriations Act, 2013 (Public Law 113-2) and the Housing and Community Development Act (42 U.S.C. § 5301 et seq.), the Governor's Office of Storm Recovery (GOSR) is acting under the auspices of New York State Homes and Community Renewal's Housing Trust Fund Corporation as a recipient of Community Development Block Grant – Disaster Recovery ("CDBG-DR") funds from the United States Department of Housing and Urban Development ("HUD"). GOSR is the entity responsible for compliance with the HUD environmental review procedures set forth in 24 CFR Part 58. GOSR is acting on behalf of HUD in providing the enclosed project information and inviting this discussion with your Nation to respond with any concerns or comments.

GOSR processes environmental reviews for projects funded with HUD CDBG-DR on a case-by-case basis. GOSR proposes to provide grant funding for the rehabilitation and improvements to convert a defunct sanitary sewer pump station to a stormwater pump station in the Town of Vestal, Broome County, New York. In accordance with Section 101(d)(6)(B) of the National Historic Preservation Act of 1966, as amended (16 U.S.C. 470a), and its implementing regulations, 36 Code of Federal Regulations (CFR) Part 800, this letter serves as notification of the proposed action. This consultation is being sent to the Delaware Nation, Delaware Tribe of Indians, Oneida Indian Nation, Onondaga Nation, Stockbridge-Munsee Community Band of Mohicans, and the Tuscarora Nation of New York.

Area of Potential Effect: The existing Robert Street Pump Station is located in the Town of Vestal, New York and is adjacent to the northwest limit of a dead-end street, Robert Street. The proposed project location would include the area near the northwestern boundary of Elizabeth Street and continue adjacent to NYS Route 434, along the existing right of way, to the Robert Street Pump Station. It will also include the area between the pump station and the Choconut Creek.

Proposed Project Description: The project will involve the construction of a 36-inch diameter gravity flow influent pipe that will run adjacent to NYS Route 434. This pipe will run from a proposed

concrete influent structure that will be built near the northwestern limit of Elizabeth Street. Included in this structure will be a sharp crested rectangular weir gate to control flow diverted to the pump station. Electrical service is also proposed to be installed underground from a nearby 3-phase utility pole located adjacent to NYS Route 434. The electric service is proposed to run along the area of the concrete influent structure and follow underground within the vicinity of the 36-inch diameter gravity flow influent pipe to the existing Robert Street Pump Station. The above-grade structure of the pump station will be demolished and a pavilion-type structure will replace it to protect the rehabilitated pump station. The infrastructure within the below-grade levels of the pump station will be replaced including retrofitting the station with new pumps and new electrical service. Miscellaneous structural and mechanical improvements will also be completed. From the existing Robert Street Pump Station, dual 24-inch effluent force mains with duckbill check valves at the discharge points are proposed to lead from the pump house to discharge into Choconut Creek. Two air release valve manholes will also be constructed along these force main lines. The stormwater pump station would pump stormwater over the flood levee to the Choconut Creek to reduce the reoccurrence of flooding in the Robert Street neighborhood.

Proposed rehabilitation work and construction is within the limits of a previously disturbed areas, including the area of the existing pump station, the area of the levee along Choconut Creek, and the area at the toe of the slope adjacent to the 4-lane NYS Route 434. The proposed action lies in the right of way of four-lane NYS 434, historically used as two-lane NYS Route 17. The Town of Vestal has a 15" diameter RCP sanitary sewer line that runs parallel and between NYS Route 434, therefore, previous disturbance for sewer trenching and roadway work has occurred in this area. Thus, the proposed work is expected to occur entirely in previously disturbed location. If there is any unanticipated discovery of artifacts or cultural resources during the construction, work will halt immediately for an archeological survey and interested parties would be notified.

GOSR is completing an environmental review for this project pursuant to HUD NEPA regulations. If the Area of Potential Effect encompasses historic properties of religious or cultural significance to your Nation, please respond within 20 days or sooner. Additionally, please indicate if there are other sources of information or other parties, Nations, Tribes, or members of the public you believe should be included in the consultation process. Please respond by email or in writing to the address listed below.

Thomas J. King, Esq.
Deputy General Counsel and Certifying Officer
Governor's Office of Storm Recovery
99 Washington Avenue
Suite 1224
Albany, New York 12260

I am available to answer any questions that you may have regarding this action. If you have any questions, please feel free to contact me at (518) 473-0015 or via email at Thomas.King@stormrecovery.ny.gov.

Sincerely,

Thomas J. King, Esq.
Deputy General Counsel and Certifying Officer
Governor's Office of Storm Recovery

Enclosures:
Site Maps (Topographic & Street Maps)
Site Plan

Electronic letter sent to:
Jesse Bergevin, Historic Resources Specialist
Oneida Indian Nation
2037 Dream Catcher Plaza
P.O. Box 662
Oneida, NY 13421-0662

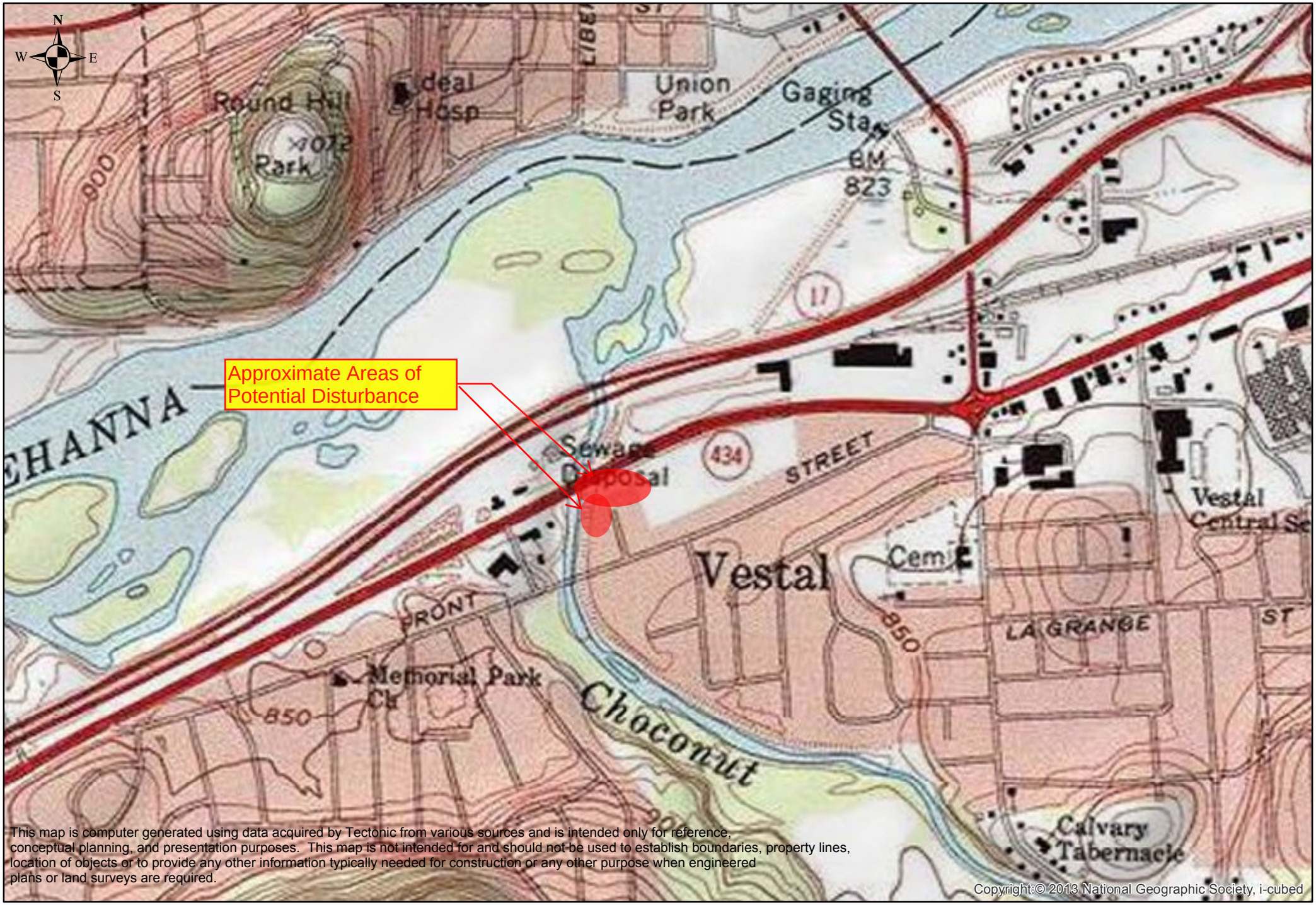

This map is computer generated using data acquired by Tectonic from various sources and is intended only for reference, conceptual planning, and presentation purposes. This map is not intended for and should not be used to establish boundaries, property lines, location of objects or to provide any other information typically needed for construction or any other purpose when engineered plans or land surveys are required.

Copyright:© 2013 National Geographic Society, i-cubed

TECTONIC
Practical Solutions, Exceptional Service

TECTONIC
70 Pleasant Hill Road,
Mountainville, N.Y. 10953
845.534.5959 voice 845.534-5999 fax
www.tectonicengineering.com

0 0.125 0.25 0.5 Miles

Topographic Map
Robert Street Stormwater Pump Station Upgrade
Town of Vestal, NY

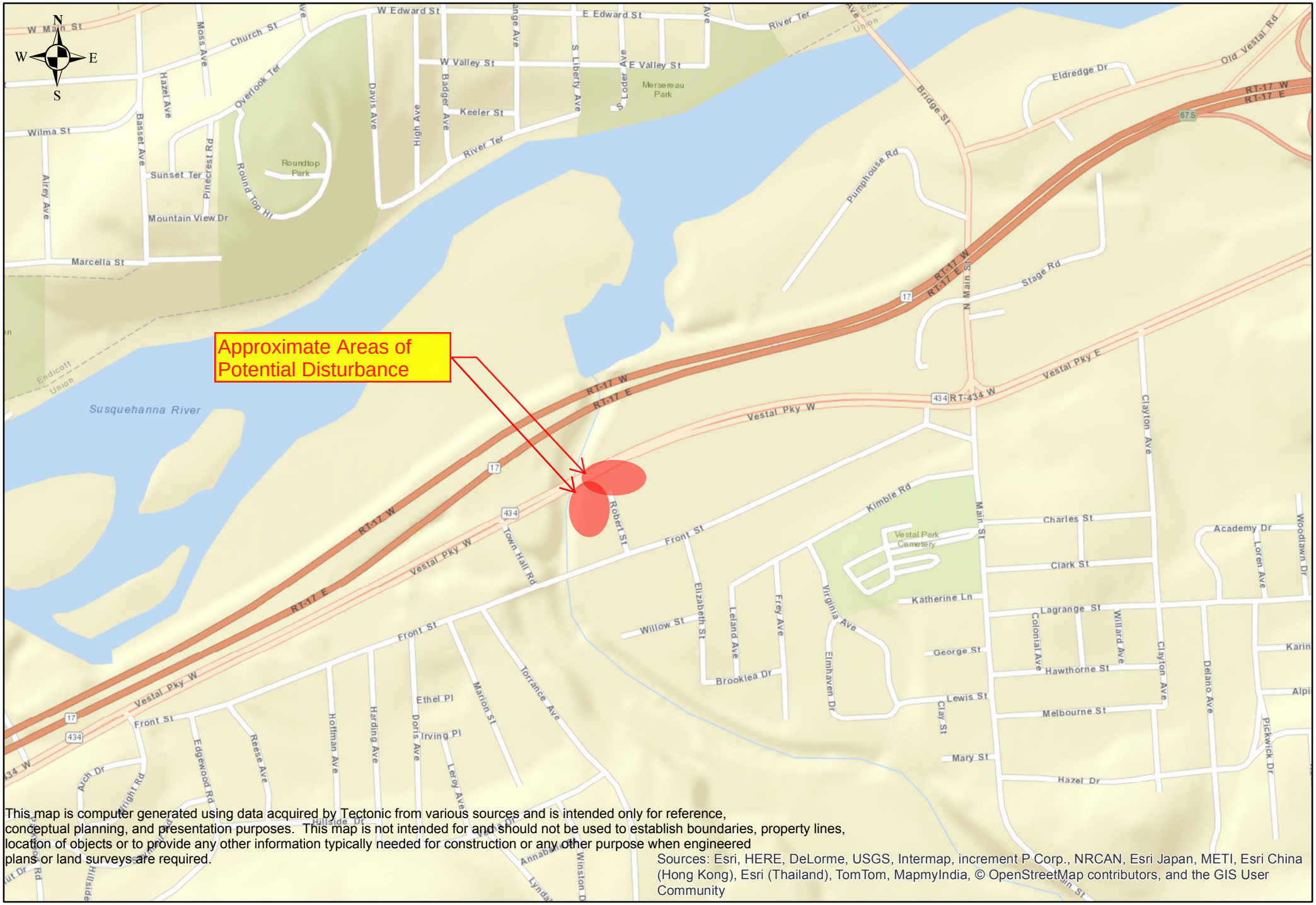

This map is computer generated using data acquired by Tectonic from various sources and is intended only for reference, conceptual planning, and presentation purposes. This map is not intended for and should not be used to establish boundaries, property lines, location of objects or to provide any other information typically needed for construction or any other purpose when engineered plans or land surveys are required.

Sources: Esri, HERE, DeLorme, USGS, Intermap, increment P Corp., NRCAN, Esri Japan, METI, Esri China (Hong Kong), Esri (Thailand), TomTom, MapmyIndia, © OpenStreetMap contributors, and the GIS User Community

TECTONIC
Practical Solutions, Exceptional Service

TECTONIC
70 Pleasant Hill Road,
Mountainville, N.Y. 10953
845.534.5959 voice 845.534-5999 fax
www.tectonicengineering.com

0 0.125 0.25 0.5 Miles

Street Map
Robert Street Stormwater Pump Station Upgrade
Town of Vestal, NY

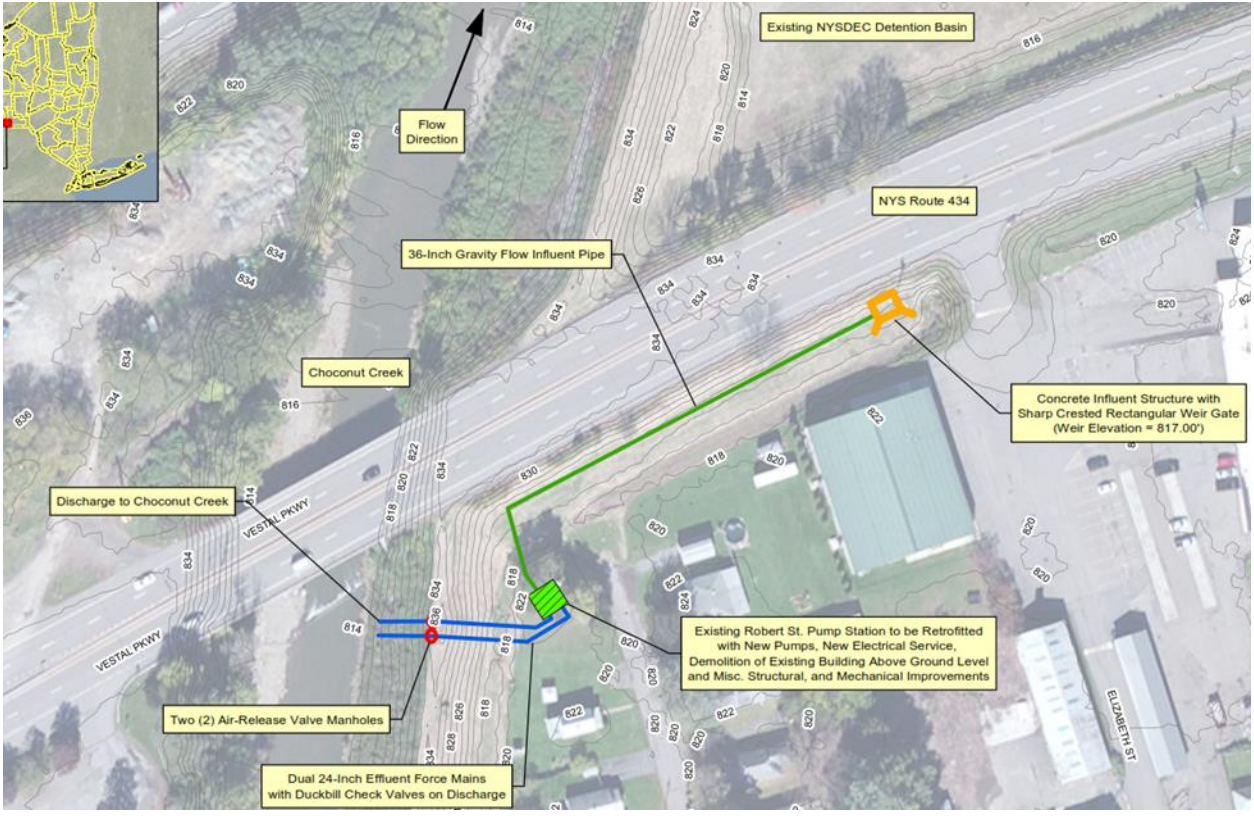
Existing NYSDEC Detention Basin
Flow Direction
NYS Route 434
36-Inch Gravity Flow Influent Pipe
Choconut Creek
Concrete Influent Structure with Sharp Crested Rectangular Weir Gate (Weir Elevation = 817.00')
Discharge to Choconut Creek
VESTAL PKWY
VESTAL PKWY
Existing Robert St. Pump Station to be Retrofitted with New Pumps, New Electrical Service, Demolition of Existing Building Above Ground Level and Misc. Structural, and Mechanical Improvements
Two (2) Air-Release Valve Manholes
Dual 24-Inch Effluent Force Mains with Duckbill Check Valves on Discharge
ELIZABETH ST

Proposed site of 36 inch Gravity Flow Influent Pipe
01/09/2015 12:21

January 19, 2016

Wallace Miller, President
Stockbridge-Munsee Community, Band of the Mohicans
N8476 Moh He Con Nuck Road
Bowler, WI 54416

Re: Section 106 Discussion
CDBG-DR, NYRCR Robert Street Stormwater Pump Station Upgrade
Town of Vestal, Broome County, NY

Dear Mr. Miller,

Pursuant to the Disaster Relief Appropriations Act, 2013 (Public Law 113-2) and the Housing and Community Development Act (42 U.S.C. § 5301 et seq.), the Governor's Office of Storm Recovery (GOSR) is acting under the auspices of New York State Homes and Community Renewal's Housing Trust Fund Corporation as a recipient of Community Development Block Grant – Disaster Recovery ("CDBG-DR") funds from the United States Department of Housing and Urban Development ("HUD"). GOSR is the entity responsible for compliance with the HUD environmental review procedures set forth in 24 CFR Part 58. GOSR is acting on behalf of HUD in providing the enclosed project information and inviting this discussion with your Community to respond with any concerns or comments.

GOSR processes environmental reviews for projects funded with HUD CDBG-DR on a case-by-case basis. GOSR proposes to provide grant funding for the rehabilitation and improvements to convert a defunct sanitary sewer pump station to a stormwater pump station in the Town of Vestal, Broome County, New York. In accordance with Section 101(d)(6)(B) of the National Historic Preservation Act of 1966, as amended (16 U.S.C. 470a), and its implementing regulations, 36 Code of Federal Regulations (CFR) Part 800, this letter serves as notification of the proposed action. This consultation is being sent to the Delaware Nation, Delaware Tribe of Indians, Oneida Indian Nation, Onondaga Nation, Stockbridge-Munsee Community Band of Mohicans, and the Tuscarora Nation of New York.

Area of Potential Effect: The existing Robert Street Pump Station is located in the Town of Vestal, New York and is adjacent to the northwest limit of a dead-end street, Robert Street. The proposed project location would include the area near the northwestern boundary of Elizabeth Street and continue adjacent to NYS Route 434, along the existing right of way, to the Robert Street Pump Station. It will also include the area between the pump station and the Choconut Creek.

Proposed Project Description: The project will involve the construction of a 36-inch diameter gravity flow influent pipe that will run adjacent to NYS Route 434. This pipe will run from a proposed concrete influent structure that will be built near the northwestern limit of Elizabeth Street. Included

in this structure will be a sharp crested rectangular weir gate to control flow diverted to the pump station. Electrical service is also proposed to be installed underground from a nearby 3-phase utility pole located adjacent to NYS Route 434. The electric service is proposed to run along the area of the concrete influent structure and follow underground within the vicinity of the 36-inch diameter gravity flow influent pipe to the existing Robert Street Pump Station. The above-grade structure of the pump station will be demolished and a pavilion-type structure will replace it to protect the rehabilitated pump station. The infrastructure within the below-grade levels of the pump station will be replaced including retrofitting the station with new pumps and new electrical service. Miscellaneous structural and mechanical improvements will also be completed. From the existing Robert Street Pump Station, dual 24-inch effluent force mains with duckbill check valves at the discharge points are proposed to lead from the pump house to discharge into Choconut Creek. Two air release valve manholes will also be constructed along these force main lines. The stormwater pump station would pump stormwater over the flood levee to the Choconut Creek to reduce the reoccurrence of flooding in the Robert Street neighborhood.

Proposed rehabilitation work and construction is within the limits of a previously disturbed areas, including the area of the existing pump station, the area of the levee along Choconut Creek, and the area at the toe of the slope adjacent to the 4-lane NYS Route 434. The proposed action lies in the right of way of four-lane NYS 434, historically used as two-lane NYS Route 17. The Town of Vestal has a 15" diameter RCP sanitary sewer line that runs parallel and between NYS Route 434, therefore, previous disturbance for sewer trenching and roadway work has occurred in this area. Thus, the proposed work is expected to occur entirely in previously disturbed location. If there is any unanticipated discovery of artifacts or cultural resources during the construction, work will halt immediately for an archeological survey and interested parties would be notified.

GOSR is completing an environmental review for this project pursuant to HUD NEPA regulations. If the Area of Potential Effect encompasses historic properties of religious or cultural significance to your Community, please respond within 20 days or sooner. Additionally, please indicate if there are other sources of information or other parties, Nations, Tribes, or members of the public you believe should be included in the consultation process. Please respond by email or in writing to the address listed below.

Thomas J. King, Esq.
Deputy General Counsel and Certifying Officer
Governor's Office of Storm Recovery
99 Washington Avenue
Suite 1224
Albany, New York 12260

I am available to answer any questions that you may have regarding this action. If you have any questions, please feel free to contact me at (518) 473-0015 or via email at Thomas.King@stormrecovery.ny.gov.

Sincerely,

Thomas J. King, Esq.
Deputy General Counsel and Certifying Officer
Governor's Office of Storm Recovery

Enclosures:
Site Maps (Topographic & Street Maps)
Site Plan

Electronic letter sent to:
Bonney Hartley
THPO, New York Office
Stockbridge-Munsee Community, Band of the Mohicans
65 1st Street
Troy, NY 12180

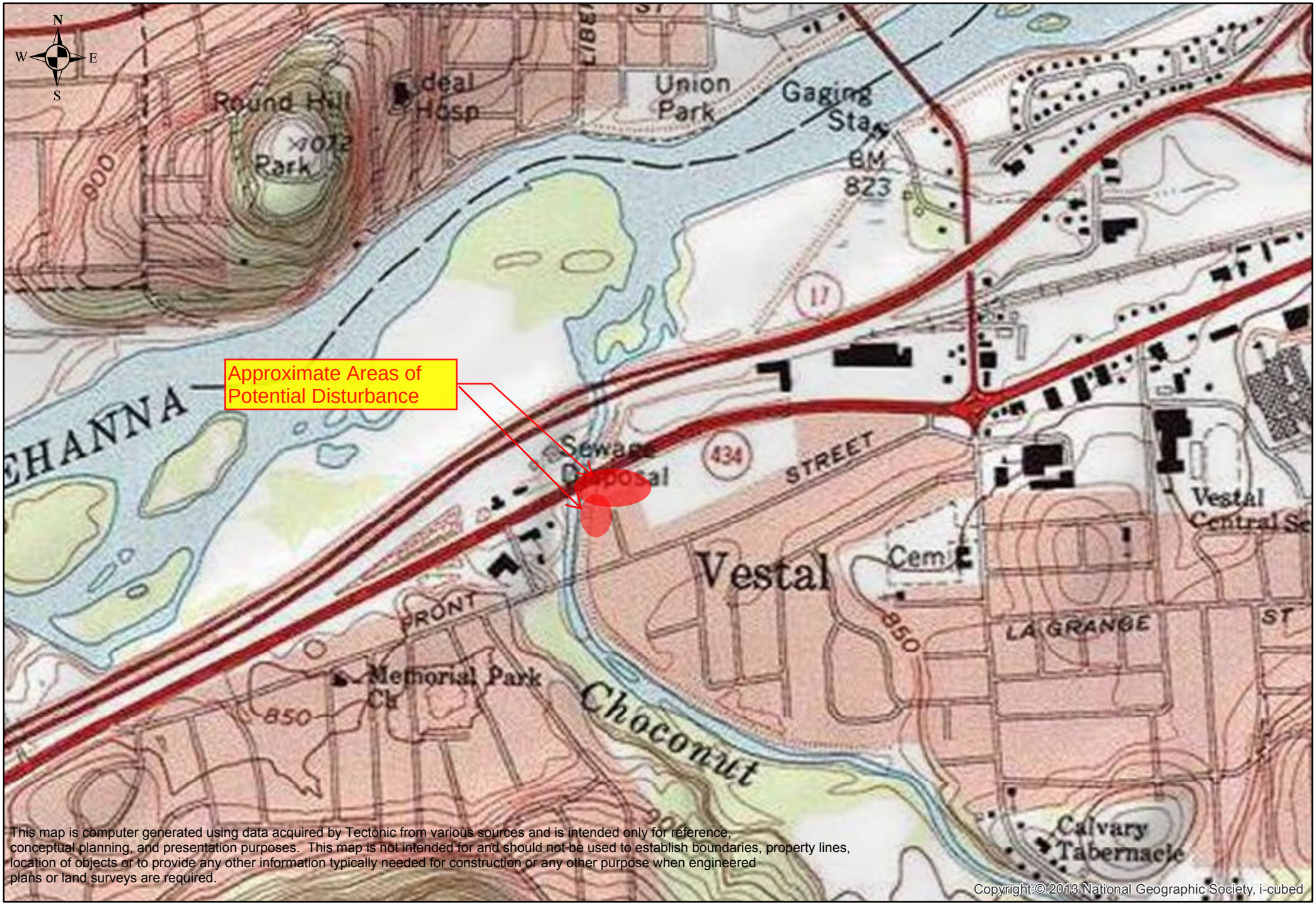

This map is computer generated using data acquired by Tectonic from various sources and is intended only for reference, conceptual planning, and presentation purposes. This map is not intended for and should not be used to establish boundaries, property lines, location of objects or to provide any other information typically needed for construction or any other purpose when engineered plans or land surveys are required.

Copyright:© 2013 National Geographic Society, i-cubed

TECTONIC
Practical Solutions, Exceptional Service

TECTONIC
70 Pleasant Hill Road,
Mountainville, N.Y. 10953
845.534.5959 voice 845.534-5999 fax
www.tectonicengineering.com

0 0.125 0.25 0.5 Miles

Topographic Map
Robert Street Stormwater Pump Station Upgrade
Town of Vestal, NY

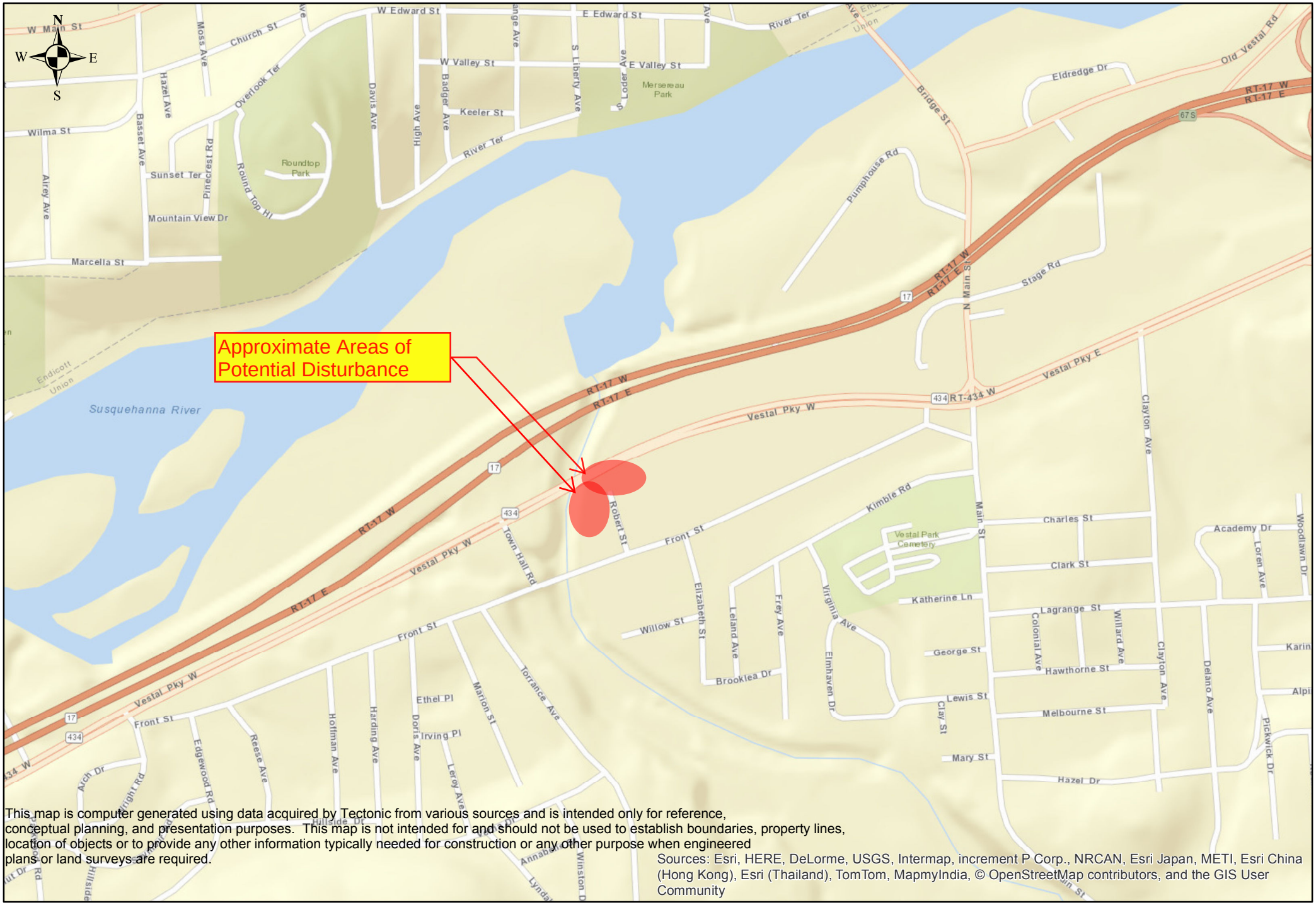

This map is computer generated using data acquired by Tectonic from various sources and is intended only for reference, conceptual planning, and presentation purposes. This map is not intended for and should not be used to establish boundaries, property lines, location of objects or to provide any other information typically needed for construction or any other purpose when engineered plans or land surveys are required.

Sources: Esri, HERE, DeLorme, USGS, Intermap, increment P Corp., NRCAN, Esri Japan, METI, Esri China (Hong Kong), Esri (Thailand), TomTom, MapmyIndia, © OpenStreetMap contributors, and the GIS User Community

TECTONIC
Practical Solutions, Exceptional Service

TECTONIC
70 Pleasant Hill Road,
Mountainville, N.Y. 10953
845.534.5959 voice 845.534-5999 fax
www.tectonicengineering.com

0 0.125 0.25 0.5 Miles

Street Map
Robert Street Stormwater Pump Station Upgrade
Town of Vestal, NY

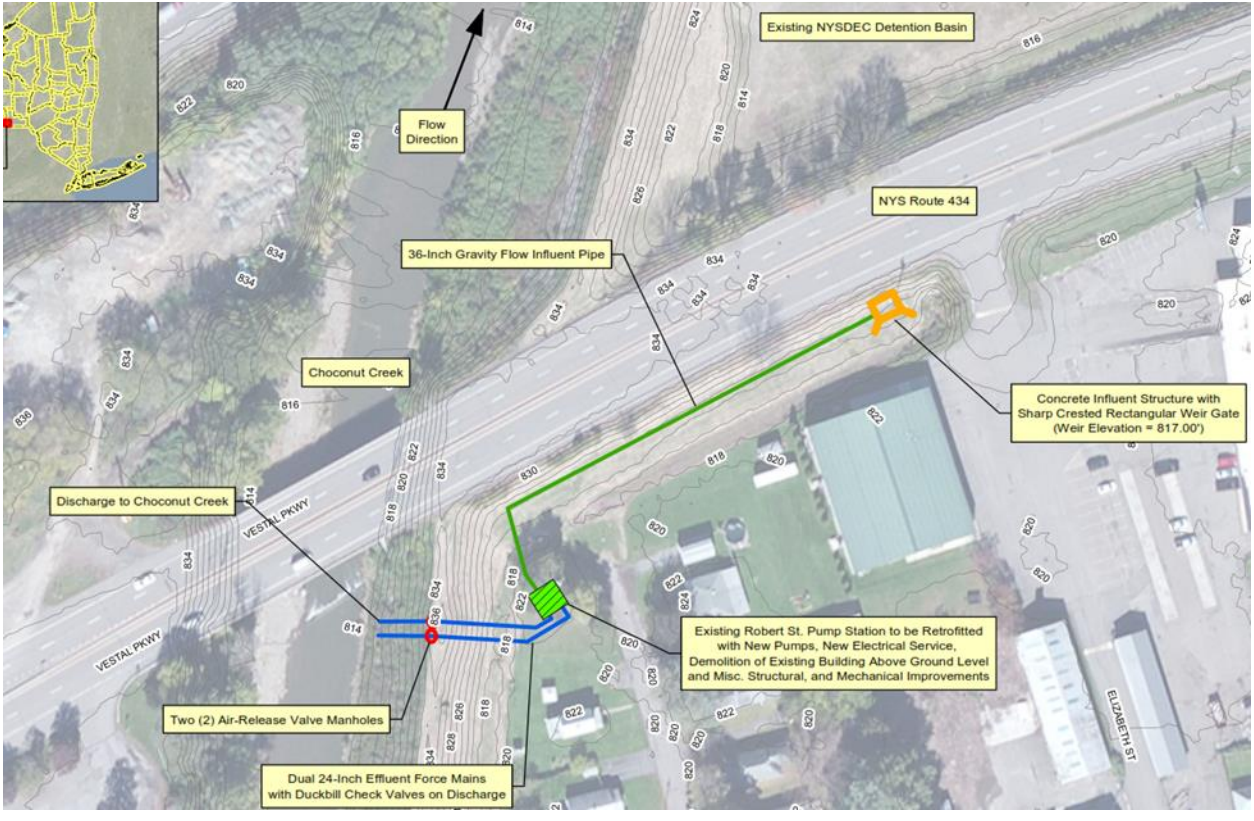
Existing NYSDEC Detention Basin
Flow Direction
NYS Route 434
36-Inch Gravity Flow Influent Pipe
Choconut Creek
Concrete Influent Structure with Sharp Crested Rectangular Weir Gate (Weir Elevation = 817.00')
Discharge to Choconut Creek
VESTAL PKWY
VESTAL PKWY
Existing Robert St. Pump Station to be Retrofitted with New Pumps, New Electrical Service, Demolition of Existing Building Above Ground Level and Misc. Structural, and Mechanical Improvements
Two (2) Air-Release Valve Manholes
Dual 24-Inch Effluent Force Mains with Duckbill Check Valves on Discharge
ELIZABETH ST

Proposed site of 36 inch Gravity Flow Influent Pipe
01/09/2015 12:21

January 19, 2016

Leo Henry, Chief
Tuscarora Nation of New York
2006 Mt. Hope Road, Tuscarora Nation
Lewiston, NY 14092

Re: Section 106 Discussion
CDBG-DR, NYRCR Robert Street Stormwater Pump Station Upgrade
Town of Vestal, Broome County, NY

Dear Mr. Henry,

Pursuant to the Disaster Relief Appropriations Act, 2013 (Public Law 113-2) and the Housing and Community Development Act (42 U.S.C. § 5301 et seq.), the Governor's Office of Storm Recovery (GOSR) is acting under the auspices of New York State Homes and Community Renewal's Housing Trust Fund Corporation as a recipient of Community Development Block Grant – Disaster Recovery ("CDBG-DR") funds from the United States Department of Housing and Urban Development ("HUD"). GOSR is the entity responsible for compliance with the HUD environmental review procedures set forth in 24 CFR Part 58. GOSR is acting on behalf of HUD in providing the enclosed project information and inviting this discussion with your Nation to respond with any concerns or comments.

GOSR processes environmental reviews for projects funded with HUD CDBG-DR on a case-by-case basis. GOSR proposes to provide grant funding for the rehabilitation and improvements to convert a defunct sanitary sewer pump station to a stormwater pump station in the Town of Vestal, Broome County, New York. In accordance with Section 101(d)(6)(B) of the National Historic Preservation Act of 1966, as amended (16 U.S.C. 470a), and its implementing regulations, 36 Code of Federal Regulations (CFR) Part 800, this letter serves as notification of the proposed action. This consultation is being sent to the Delaware Nation, Delaware Tribe of Indians, Oneida Indian Nation, Onondaga Nation, Stockbridge-Munsee Community Band of Mohicans, and the Tuscarora Nation of New York.

Area of Potential Effect: The existing Robert Street Pump Station is located in the Town of Vestal, New York and is adjacent to the northwest limit of a dead-end street, Robert Street. The proposed project location would include the area near the northwestern boundary of Elizabeth Street and continue adjacent to NYS Route 434, along the existing right of way, to the Robert Street Pump Station. It will also include the area between the pump station and the Choconut Creek.

Proposed Project Description: The project will involve the construction of a 36-inch diameter gravity flow influent pipe that will run adjacent to NYS Route 434. This pipe will run from a proposed concrete influent structure that will be built near the northwestern limit of Elizabeth Street. Included

in this structure will be a sharp crested rectangular weir gate to control flow diverted to the pump station. Electrical service is also proposed to be installed underground from a nearby 3-phase utility pole located adjacent to NYS Route 434. The electric service is proposed to run along the area of the concrete influent structure and follow underground within the vicinity of the 36-inch diameter gravity flow influent pipe to the existing Robert Street Pump Station. The above-grade structure of the pump station will be demolished and a pavilion-type structure will replace it to protect the rehabilitated pump station. The infrastructure within the below-grade levels of the pump station will be replaced including retrofitting the station with new pumps and new electrical service. Miscellaneous structural and mechanical improvements will also be completed. From the existing Robert Street Pump Station, dual 24-inch effluent force mains with duckbill check valves at the discharge points are proposed to lead from the pump house to discharge into Choconut Creek. Two air release valve manholes will also be constructed along these force main lines. The stormwater pump station would pump stormwater over the flood levee to the Choconut Creek to reduce the reoccurrence of flooding in the Robert Street neighborhood.

Proposed rehabilitation work and construction is within the limits of a previously disturbed areas, including the area of the existing pump station, the area of the levee along Choconut Creek, and the area at the toe of the slope adjacent to the 4-lane NYS Route 434. The proposed action lies in the right of way of four-lane NYS 434, historically used as two-lane NYS Route 17. The Town of Vestal has a 15" diameter RCP sanitary sewer line that runs parallel and between NYS Route 434, therefore, previous disturbance for sewer trenching and roadway work has occurred in this area. Thus, the proposed work is expected to occur entirely in previously disturbed location. If there is any unanticipated discovery of artifacts or cultural resources during the construction, work will halt immediately for an archeological survey and interested parties would be notified.

GOSR is completing an environmental review for this project pursuant to HUD NEPA regulations. If the Area of Potential Effect encompasses historic properties of religious or cultural significance to your Nation, please respond within 20 days or sooner. Additionally, please indicate if there are other sources of information or other parties, Nations, Tribes, or members of the public you believe should be included in the consultation process. Please respond by email or in writing to the address listed below.

Thomas J. King, Esq.
Deputy General Counsel and Certifying Officer
Governor's Office of Storm Recovery
99 Washington Avenue
Suite 1224
Albany, New York 12260

I am available to answer any questions that you may have regarding this action. If you have any questions, please feel free to contact me at (518) 473-0015 or via email at Thomas.King@stormrecovery.ny.gov.

Sincerely,

Thomas J. King, Esq.
Deputy General Counsel and Certifying Officer
Governor's Office of Storm Recovery

Enclosures:
Site Maps (Topographic & Street Maps)
Site Plan

Electronic letter sent to:
Mr. Bryan Printup, Nation Rep. for Section 106
Tuscarora Nation of New York
5226 E. Walmore Road, Tuscarora Nation
Lewiston, NY 14092

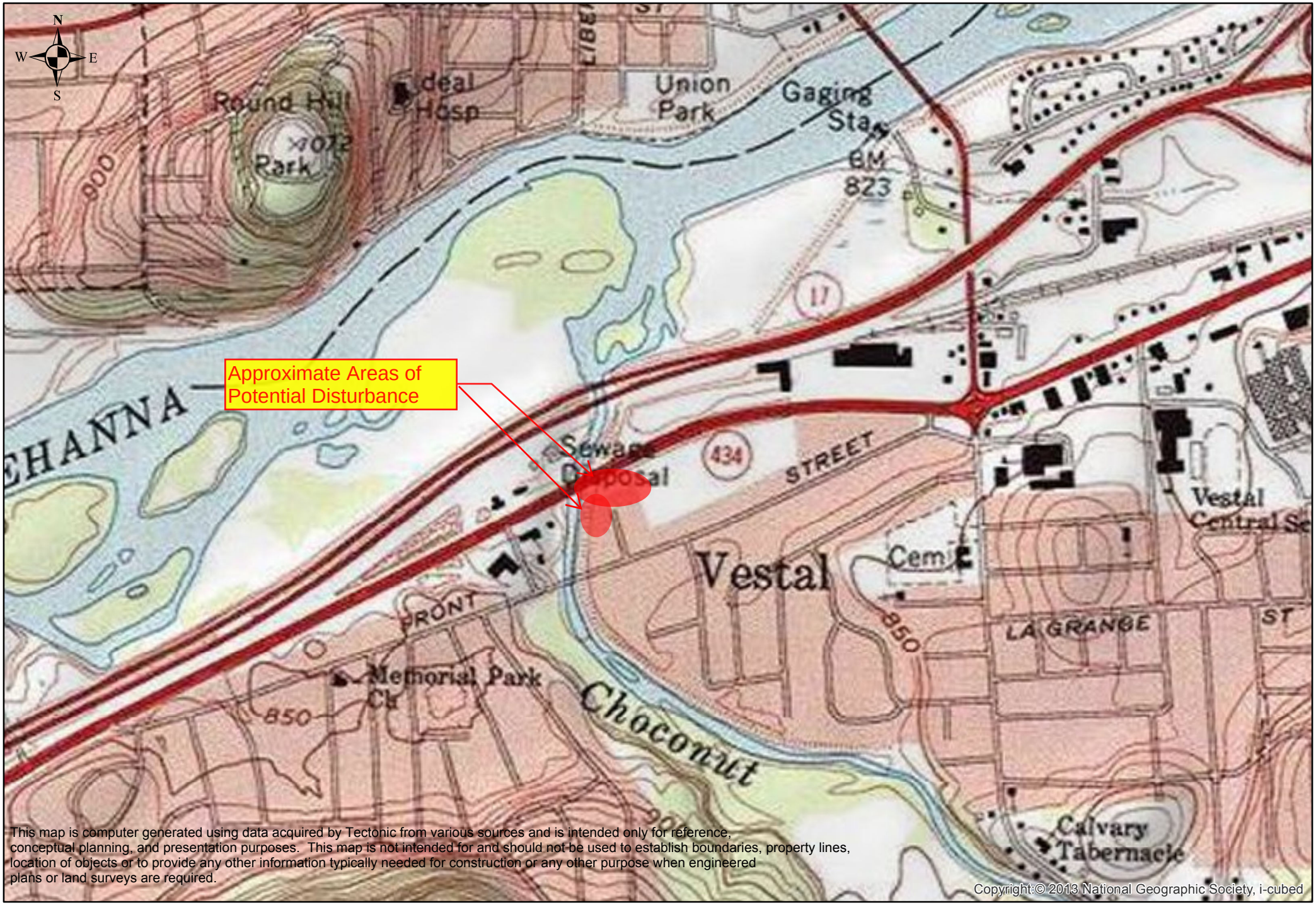

This map is computer generated using data acquired by Tectonic from various sources and is intended only for reference, conceptual planning, and presentation purposes. This map is not intended for and should not be used to establish boundaries, property lines, location of objects or to provide any other information typically needed for construction or any other purpose when engineered plans or land surveys are required.

Copyright:© 2013 National Geographic Society, i-cubed

TECTONIC
Practical Solutions, Exceptional Service

TECTONIC
70 Pleasant Hill Road,
Mountainville, N.Y. 10953
845.534.5959 voice 845.534-5999 fax
www.tectonicengineering.com

0 0.125 0.25 0.5 Miles

Topographic Map
Robert Street Stormwater Pump Station Upgrade
Town of Vestal, NY

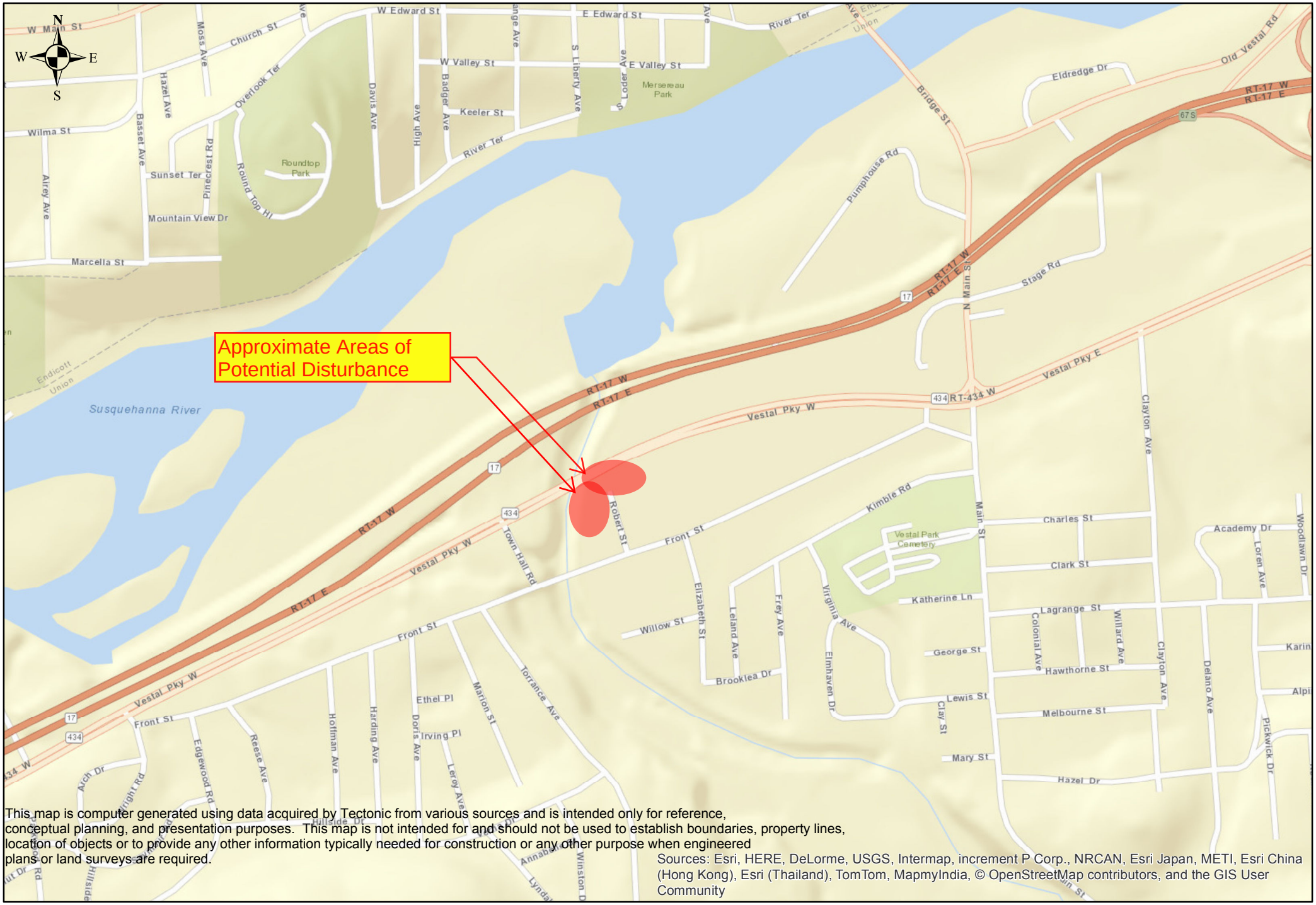

This map is computer generated using data acquired by Tectonic from various sources and is intended only for reference, conceptual planning, and presentation purposes. This map is not intended for and should not be used to establish boundaries, property lines, location of objects or to provide any other information typically needed for construction or any other purpose when engineered plans or land surveys are required.

Sources: Esri, HERE, DeLorme, USGS, Intermap, increment P Corp., NRCAN, Esri Japan, METI, Esri China (Hong Kong), Esri (Thailand), TomTom, MapmyIndia, © OpenStreetMap contributors, and the GIS User Community

TECTONIC
Practical Solutions, Exceptional Service

TECTONIC
70 Pleasant Hill Road,
Mountainville, N.Y. 10953
845.534.5959 voice 845.534-5999 fax
www.tectonicengineering.com

0 0.125 0.25 0.5 Miles

Street Map
Robert Street Stormwater Pump Station Upgrade
Town of Vestal, NY

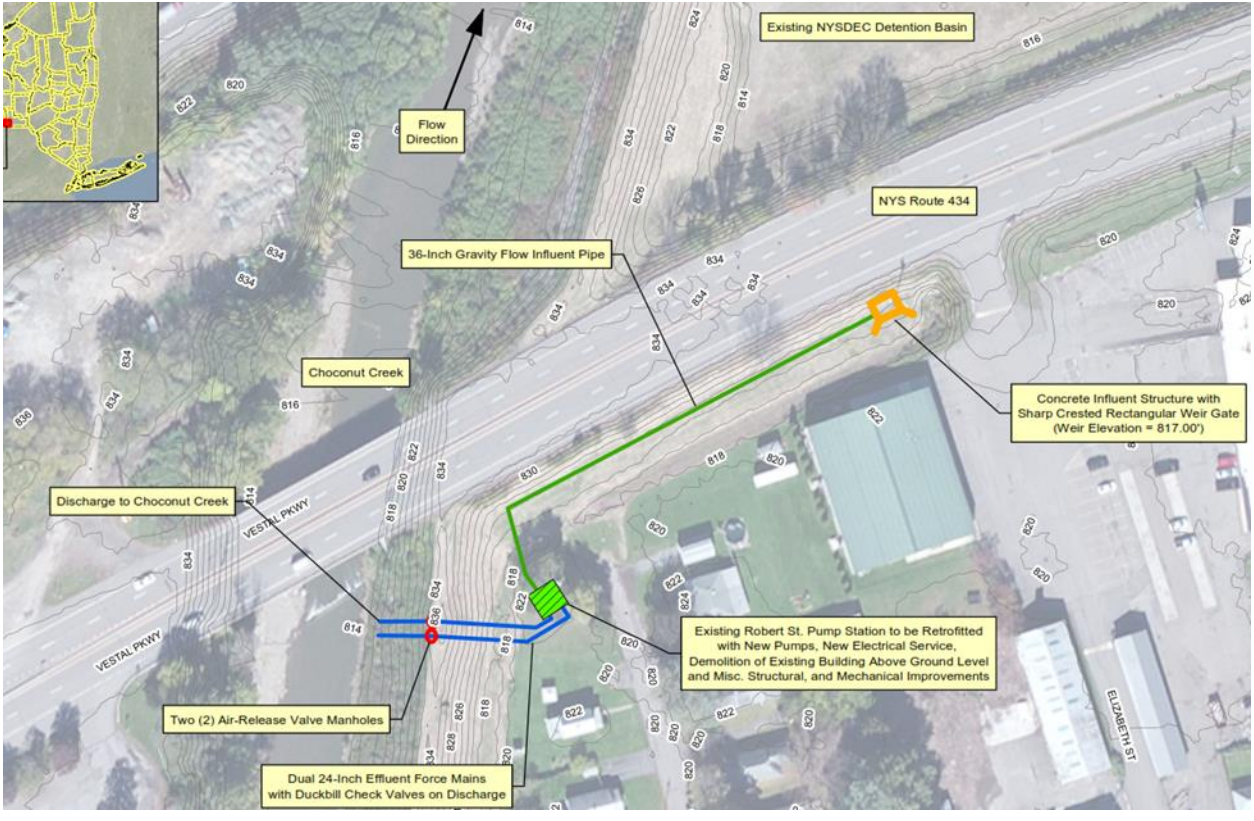
Existing NYSDEC Detention Basin
Flow Direction
NYS Route 434
36-Inch Gravity Flow Influent Pipe
Choconut Creek
Concrete Influent Structure with Sharp Crested Rectangular Weir Gate (Weir Elevation = 817.00')
Discharge to Choconut Creek
VESTAL PKWY
VESTAL PKWY
Existing Robert St. Pump Station to be Retrofitted with New Pumps, New Electrical Service, Demolition of Existing Building Above Ground Level and Misc. Structural, and Mechanical Improvements
Two (2) Air-Release Valve Manholes
Dual 24-Inch Effluent Force Mains with Duckbill Check Valves on Discharge
ELIZABETH ST

Proposed site of 36 inch Gravity Flow Influent Pipe
01/09/2015 12:21

Attachment 9

Sole Source Aquifer Map, Sole Source Aquifer Project Review, and United States Environmental Protection Agency Sole Source Aquifer Compliance Documentation

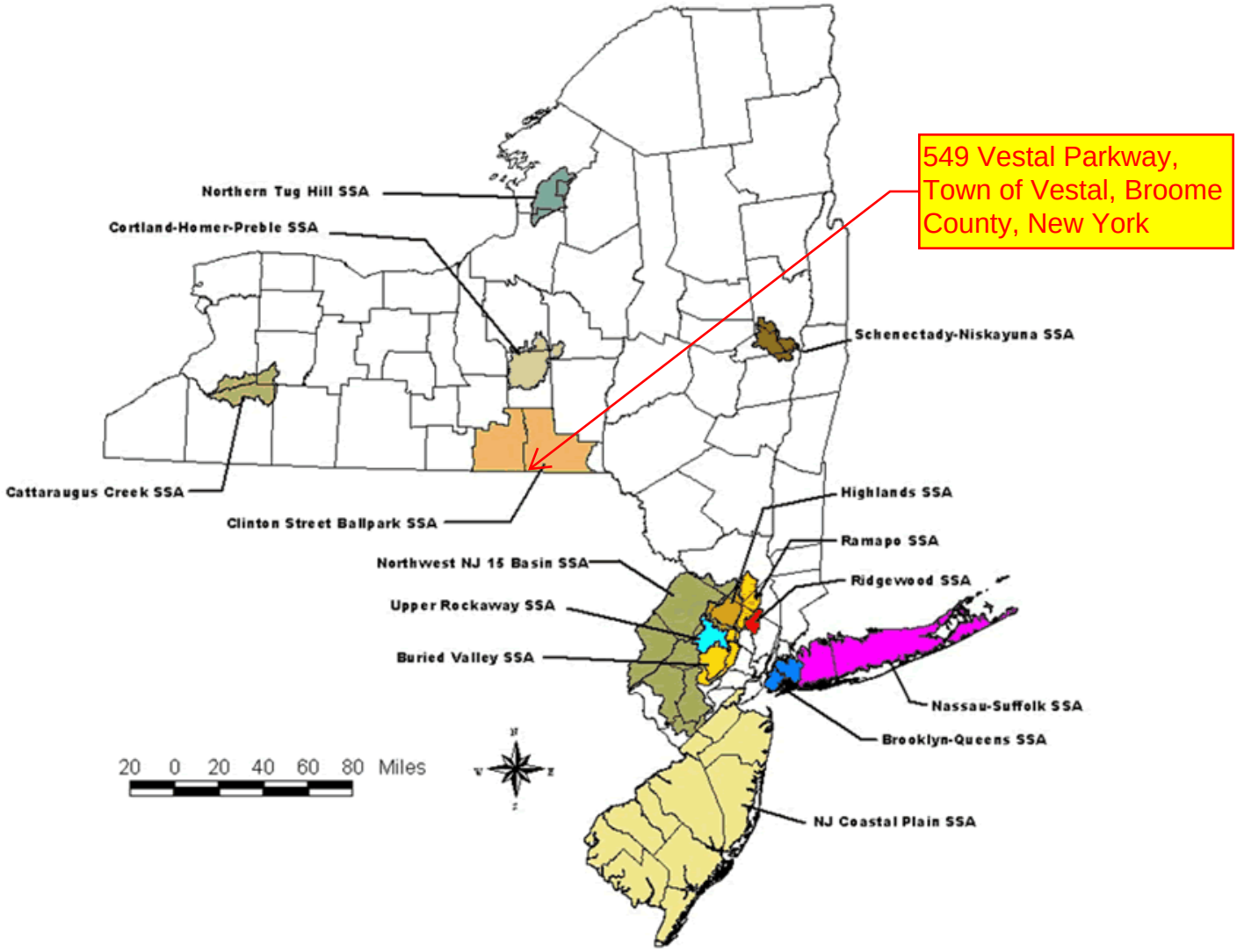

http://www.dec.ny.gov/docs/water_pdf/ssa.pdf

October 3, 2016

Ms. Grace Musumeci
U.S. Environmental Protection Agency
Region II Main Regional Office
290 Broadway, 25th Floor
New York, NY 10007

Re: Sole Source Aquifer Analysis - CDBG-DR NY Rising Community Reconstruction Program – Robert Street Stormwater Pump Station Upgrade, 549 Vestal Parkway, Vestal, Broome County, New York 13850

Dear Ms. Musumeci:

The Governor's Office of Storm Recovery (GOSR), operating under the auspices of the New York State Homes and Community Renewal's (NYSHCR) Housing Trust Fund Corporation, was established to aid the statewide recovery of disaster-affected communities in New York State. GOSR is administering a U.S. Department of Housing and Urban Development (HUD) Community Development Block Grant for Disaster Recovery (CDBG-DR). 24 C.F.R. Part 58 requires GOSR to review projects for conformance with the Safe Drinking Water Act of 1974 (42 U.S.C. 201, 300(f) *et seq.*, and 21 U.S.C. 349) as amended, and Environmental Protection Agency ("EPA") regulations pertaining to Sole Source Aquifers found at 40 C.F.R. Part 149. On behalf of GOSR, please find enclosed the sole source aquifer review information for one such project.

The Town of Vestal has applied for CDBG-DR funding through the NY Rising Community Reconstruction Program for the conversion of a defunct sanitary pump station to a stormwater pump station in order to reduce flood risk to the surrounding neighborhood. The pump station location is 549 Vestal Parkway, Town of Vestal, Broome County, New York. This parcel is adjacent to the northwest limit of Robert Street, which is a dead-end street located off of Front Street. The project location is marked on the maps included in the annexed Attachments.

The proposed work comprises the combined use of the converted pump station and two new outfall pipes in order to drain ponding stormwater into the Choconut Creek. The project will also involve the construction of a 36-inch diameter gravity flow influent pipe that will run adjacent to NYS Route 434 to feed ponding water into the pump station. The project will involve the removal of the above-grade pump station structure, which will be replaced with a pavilion-type structure. The below-grade pump station infrastructure will be repurposed in-place and will include the installation of two conventional submersible pumps. The project will involve minor excavation and grading in order to install the washed gravel piping bed and allow fill placement over the piping after the piping is installed. Minor excavation will be necessary to install pipe supports in the swale between the levee and the pump station. Piping will be mounted on the supports so that it rests at an above-ground level over the swale location. Details of the proposed project are included in the Project Summary Attachment.

In accordance with the Memorandum of Understanding ("MOU") between EPA and HUD dated August 24, 1990, GOSR hereby requests an Initial Screen/Preliminary Review for the project. Please review the attached documentation, including Attachment 2.A and 3 to the MOU. Responses can be sent to me via email at alicia.shultz@nyshcr.org. In accordance with the MOU, I will look forward to your response within the next 15 days. If you have any questions, please call me at (518) 474-0648.

Sincerely,

Alicia Shultz
Community Developer - Environmental Services
New York State Homes & Community Renewal
38-40 State St., 408N, Hampton Plaza, Albany, NY 12207
Office (518) 474-0647
Cell (917) 376-9003
Alicia.Shultz@nyshcr.org

Enclosures:

2.A Non-housing/Project Activity Initial Screen Criteria
3 SSA Preliminary Review Information Requirements

Attachments:

A. Street Map, Aerial Photograph, and Topographic Map (showing project location)
B. Project Summary; Sole Source Aquifer Map; Drinking Water Well Map (separate confidential attachment)
C. HUD Environmental Standards Review

ATTACHMENT 2.A
Non-Housing/Project Activity Initial Screen Criteria
Sole Source Aquifer Checklist
New York Governor's Office of Storm Recovery
Robert Street Stormwater Pump Station Upgrade, 549 Vestal Parkway, Vestal, Broome County, New York 13850
Alicia Shultz, Community Developer - Environmental Services
Homes and Community Renewal
October 3, 2016

The following list of criteria questions are to be used as an initial screen to determine which non-housing projects/activities should be forwarded to the Environmental Protection Agency (EPA) for Preliminary Sole Source Aquifer (SSA) Review. If any of the questions are answered affirmatively, Attachment 3, SSA Preliminary Review Requirements, should also be completed. The application/final statement, this Attachment, Attachment 3, and any other pertinent information should than be forwarded to EPA at the address below. Any project/activity not meeting the criteria in this Attachment, but suspected of having a potential adverse effect on the Sole Source Aquifer should also be forwarded.

Chief, Environmental Impacts Branch
USEPA Region II
26 Federal Plaza, Room 500
New York, New York 10278
(212) 264-1840

CRITERIA QUESTIONS	YES	NO	N/A
1. Is the project/activity located within a currently designated or proposed groundwater sensitive area such as a special Ground Water Protection Area, Critical Supply Area, Wellhead Protection Area, etc.? (Information confirmed by NYS Department of Environmental Conservation)	☐	☒	☐
2. Is the project/activity located within a one half mile radius (2640 feet) of a current or proposed public water supply well or wellfield? (See ½ Mile Buffer and Source Water Assessment Program [SWAP] analysis map in **Attachment B**)	☐	☐	☐

3. Will the project/activity include or directly cause (check appropriate items):

	YES	NO	N/A
construction or expansion of solid waste disposal, recycling or conversion facilities	☐	☒	☐
construction or expansion or closure of landfills	☐	☒	☐
construction or expansion of water supply facilities	☐	☒	☐
construction or expansion of on-site wastewater treatment plants or sewage trunk lines	☐	☒	☐
construction or expansion of gas or petroleum trunk lines greater than 1320 feet	☐	☒	☐
construction or expansion of railroad spurs or similar extensions	☐	☒	☐
construction or expansion of municipal sewage treatment plants	☐	☒	☐

4. Will the project/ activity include storage or handling of any hazardous constituents as listed in Attachment 4, Hazardous Constituents?	☐	☒	☐
5. Will the project/ activity include bulk storage of petroleum in underground or above ground tanks in excess of 1,100 gallons? (Please give what assurance they are done in a proper manner.)	☐	☒	☐
6. Will the project/ activity require a federal or state discharge elimination permit or modification of an existing permit? (Confirmed by the NYSDEC on 2/11/2015)	☐	☒	☐

This attachment was completed by:

Name: Alicia Shultz
Title: Community Developer - Environmental Services
Address: New York State Homes & Community Renewal
38-40 State St., 408N, Hampton Plaza
Albany, NY 12207
Telephone: (518) 474-0647

Date: October 3, 2016

_____ October 3, 2016_____
Signature Date

ATTACHMENT 3
SSA PRELIMINARY REVIEW INFORMATION REQUIREMENTS

Where currently available, the information in this Attachment should be provided to the Environmental Protection Agency (see address below) along with the application/final statement; Attachment 2.A, Non-Housing Initial Screen Criteria or Attachment 2.B, Housing Initial Screen Criteria; and any other information which may be pertinent to a Sole Source Aquifer review. Where applicable, indicate the source of your information.

I. Project/ Activity Location	**Enclosed?**	
	Yes	No
1. Provide the geographic location and total acreage of the project/ activity site. Include a site map which identifies the site in relation to the surrounding area. (See **Attachment A**; the project area covers approximately 0.42 acres.)	☒	☐
2. If applicable, identify which groundwater sensitive areas (Special Ground Water Protection Area, Critical Supply Area, Wellhead Protection Area, etc.) the project/ activity is located within or adjacent to. (See ½ Mile Buffer and Source Water Assessment Program [SWAPP] analysis map in **Attachment B**.)	☒	☐

II. Nature of Project/ Activity	**Enclosed?**	
	Yes	No
3. Provide a general narrative describing the project/ activity including but not limited to: type of facility; type of activities to be conducted; number and type of units; number of residents, etc. Provide the general layout of the project/ activity site and site-plan if available. (See Project Summary in **Attachment B**.)	☒	☐

III. Public Water Supply	**Enclosed?**	
	Yes	No
4. Provide a description of plans to provide water supply. (Water supply is not necessary for the project.)	☐	☒

5. Provide the location of nearby existing or proposed public water supply wells or wellfields within one half mile radius (2,640 feet) of the project/ activity. Provide the name of the supplier(s) of those wells or wellfields. This information should be available from the local health department, State health department or the State environmental agency. (See ½ Mile Buffer and SWAP Analysis map in **Attachment B**.)	☒	☐

IV. Wastewater and Sewage Disposal	**Enclosed?**	
	Yes	No
6. Provide a description of plans to handle wastewater and sewage disposal. If the project/ activity is to be served by existing public sanitary sewers provide the name of the sewer district. (The project will not generate wastewater or sewage.)	☐	☒
7. Provide a description of plans to handle storm water runoff. (This project is specifically designed to pump ponding stormwater over a levee to reduce ponding of water in a residential neighborhood. See the Project Summary attachment for details.)	☒	☐
8. Identify the location, design, size of any on-site recharge basins, dry wells, leaching fields, retention ponds, etc. (There are no dry wells, leaching fields, or retention ponds on site. The project does entail construction of 36-inch diameter gravity flow influent pipes in an existing drainage swale adjacent to NYS Route 434. See the Project Summary attachment for details.)	☐	☒

V. Use, Storage, Transport of Hazardous or Toxic Materials *(Applies only to non-housing projects/activities)*	**Enclosed?**	
	Yes	No
9. Identify any products listed in Attachment 4, Hazardous Constituents, of the Housing and Urban Development-Environmental Protection Agency Memorandum of Understanding which may be used, stored, transported, or released as a result of the project not related to construction. (None on site.)	☐	☒
10. Identify the number and capacity of underground storage tanks at the project/ activity site. Identify the products and volume to be stored, and the location on the site. (There are no underground storage tanks at the project site. See HUD Environmental Standards Review in **Attachment C**.)	☐	☒
11. Identify the number and capacity of above ground storage tanks at the project/ activity site. Identify the products and volume to be stored, and the location on the site. (There are no above ground storage tanks at the project site. See HUD Environmental Standards Review in **Attachment C**.)	☐	☒

This form was completed by:

Name: Alicia Shultz
Title: Community Developer - Environmental Services
Address: New York State Homes & Community Renewal
38-40 State St., 408N, Hampton Plaza
Albany, NY 12207
Telephone: (518) 474-0647
Date: October 3, 2016

_____ October 3, 2016
Signature Date

Attachment A

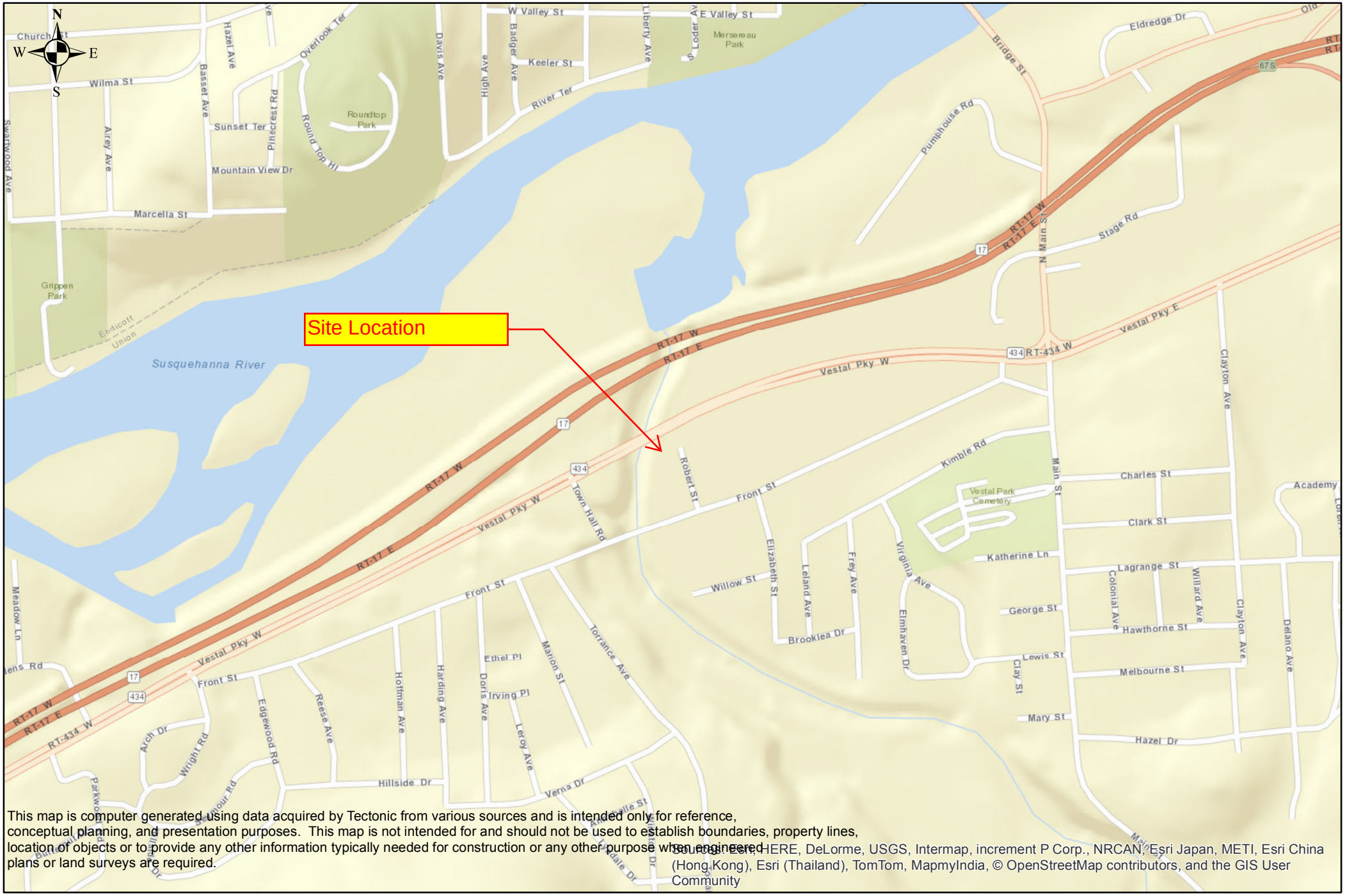

This map is computer generated using data acquired by Tectonic from various sources and is intended only for reference, conceptual planning, and presentation purposes. This map is not intended for and should not be used to establish boundaries, property lines, location of objects or to provide any other information typically needed for construction or any other purpose when engineered plans or land surveys are required.

Sources: Esri, HERE, DeLorme, USGS, Intermap, increment P Corp., NRCAN, Esri Japan, METI, Esri China (Hong Kong), Esri (Thailand), TomTom, MapmyIndia, © OpenStreetMap contributors, and the GIS User Community

TECTONIC

Practical Solutions, Exceptional Service

TECTONIC
70 Pleasant Hill Road,
Mountainville, N.Y. 10953
845.534.5959 voice 845.534-5999 fax
www.tectonicengineering.com

0 0.1 0.2 0.4 Miles

Street Map
Robert Street Stormwater Pump Station Upgrade
Town of Vestal, NY

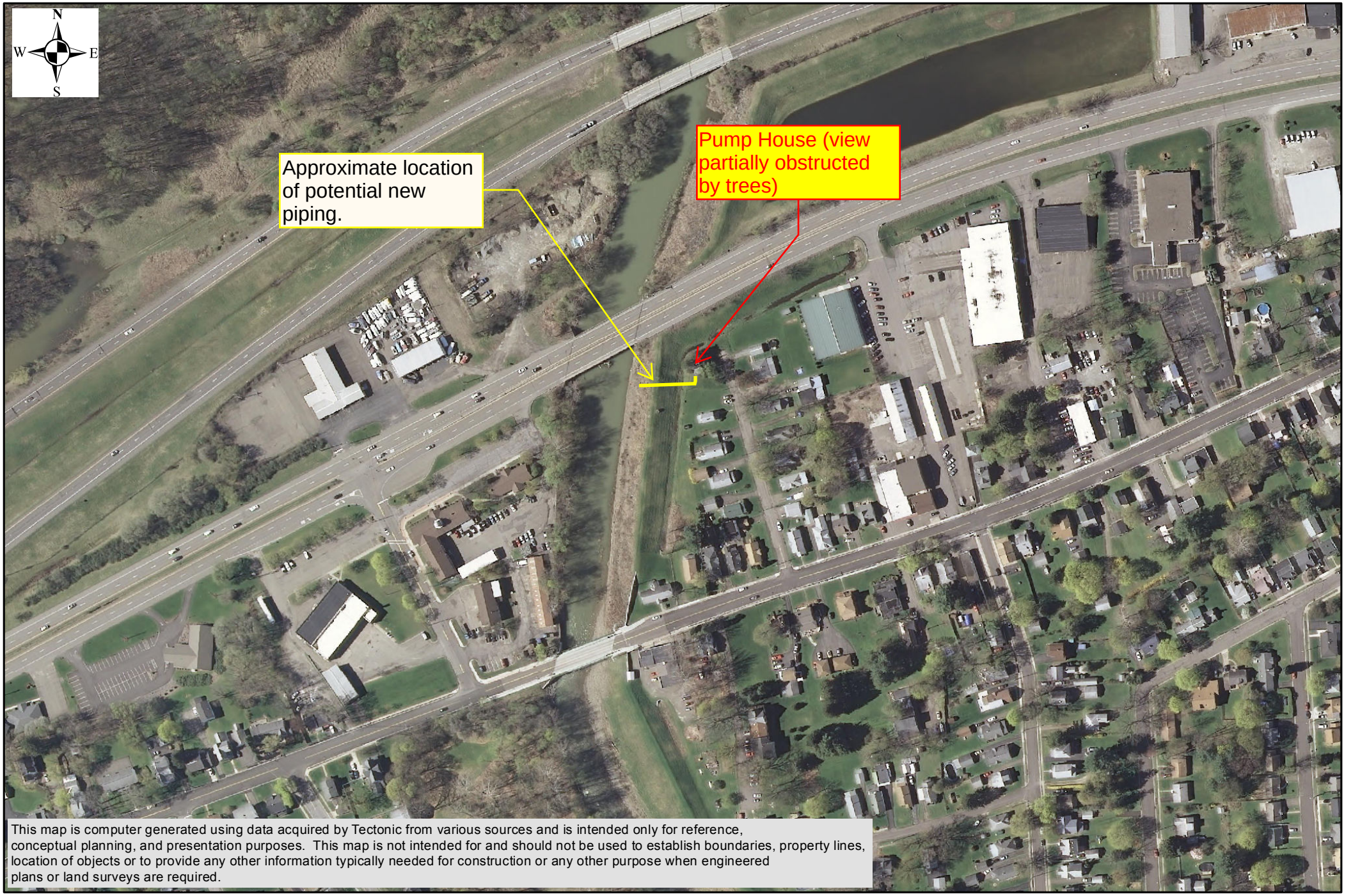

This map is computer generated using data acquired by Tectonic from various sources and is intended only for reference, conceptual planning, and presentation purposes. This map is not intended for and should not be used to establish boundaries, property lines, location of objects or to provide any other information typically needed for construction or any other purpose when engineered plans or land surveys are required.

TECTONIC

Practical Solutions, Exceptional Service

TECTONIC
70 Pleasant Hill Road,
Mountainville, N.Y. 10953
845.534.5959 voice 845.534-5999 fax
www.tectonicengineering.com

Aerial Image
Robert Street Stormwater Pump Station Upgrade
Town of Vestal, NY

0 125 250 500 Feet

Map Created 1/12/2015 by JG

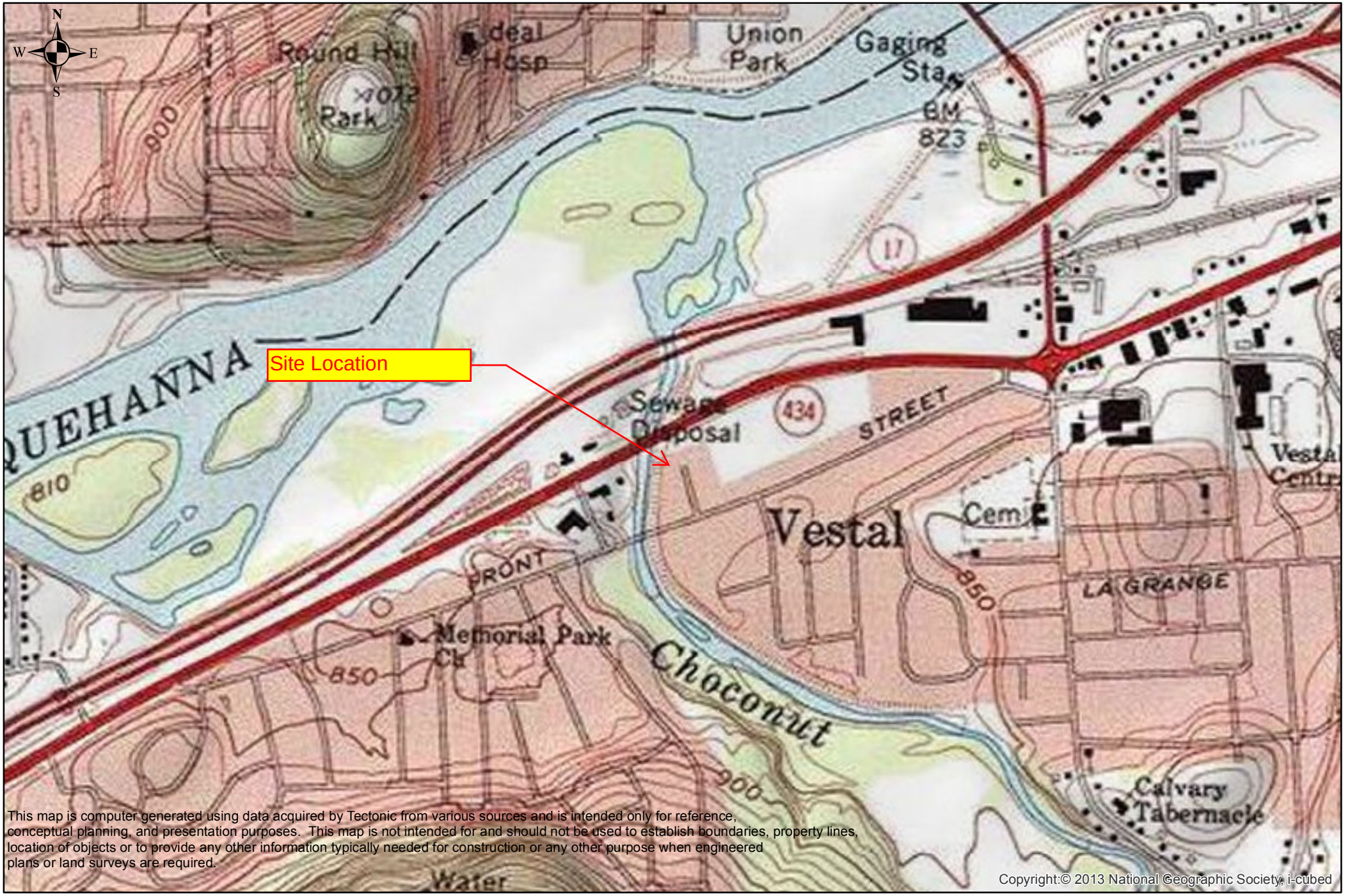

This map is computer generated using data acquired by Tectonic from various sources and is intended only for reference, conceptual planning, and presentation purposes. This map is not intended for and should not be used to establish boundaries, property lines, location of objects or to provide any other information typically needed for construction or any other purpose when engineered plans or land surveys are required.

Copyright:© 2013 National Geographic Society, i-cubed

TECTONIC

Practical Solutions, Exceptional Service

TECTONIC
70 Pleasant Hill Road,
Mountainville, N.Y. 10953
845.534.5959 voice 845.534-5999 fax
www.tectonicengineering.com

0 0.1 0.2 0.4 Miles

Topographic Map
Robert Street Stormwater Pump Station Upgrade
Town of Vestal, NY

Robert Street Stormwater Pump Station Upgrade - 549 Vestal Parkway, Vestal, New York
PROJECT SUMMARY

Project Activities: This project involves U.S. Department of Housing and Urban Development (HUD) Community Development Block Grant – Disaster Recovery (CDBG-DR) program funding to convert the Roberts Street Pump Station which is a defunct sanitary sewer pump station to a stormwater pump station. The pump station location is 549 Vestal Parkway, Town of Vestal, Broome County, New York. This parcel is adjacent to the northwest limit of Robert Street, which is a dead-end street located off of Front Street (**Attachment A**). The proposed work comprises the combined use of the converted pump station and its two new outfall pipes in order to drain stormwater into the Choconut Creek. The project will also involve the construction of a 36-inch diameter gravity flow influent pipe that will run adjacent to NYS Route 434. This pipe will run from a proposed concrete influent structure that will be built near the northwestern limit of Elizabeth Street. Included in this structure will be a sharp-crested rectangular weir gate to control the flow diverted to the pump station. Electrical service is also proposed to be installed underground from a nearby utility pole to be installed adjacent to NYS Route 434. From this utility pole, the electric service will run south underground, parallel to Robert Street, then west along the area of the concrete influent structure and follow underground within the vicinity of the 36-inch diameter gravity flow influent pipe to the existing Robert Street Pump Station.

The project will involve the removal of the above-grade pump station structure, which will be replaced with a 1-story brick pump station. The below-grade pump station infrastructure will be repurposed in-place and will include the installation of two 100-HP submersible pumps with interior station piping and valves. The project will involve minor excavation and grading in order to install the washed gravel piping bed and allow fill placement over the piping after the piping is installed. The dual 24-inch effluent force mains would run from the existing Robert Street Pump Station and end with duckbill check valves at the discharge points to Choconut Creek. Two (2) 6-foot air/ vacuum release valve manholes will also be constructed along these force main lines. The pipes will be positioned from the southwestern side of the pump station and will turn west to be approximately perpendicular to the adjacent swale and levee. Excavation will be necessary to install the underground force mains, with a minimum of two feet of cover on the western side of the air/ vacuum manholes and a minimum of four feet of cover east of the air/ vacuum manhole. It is not anticipated that the stream bed embankment will be disturbed during construction as the force main and outfall headwall will be placed above the ordinary high water mark.

The pipe section on the levee will be overlain with topsoil and seeded. Native vegetation will be used to reseed the disturbed area and all topsoil and gravel used will be clean so as not to introduce contaminants into the area. The proposed pipe outfall locations will be placed over the levee and down the creek side of the Choconut Creek streambank. The outfall locations of the pipes on the bank of Choconut Creek will require the installation of a concrete headwall and rip rap will be placed below the outfall to prevent erosion. The outfall and rip rap will be above the ordinary high water mark. The pipes will be installed in a concrete headwall, with rip rap a minimum of two feet deep and keyed in to the existing slope for a minimum of two feet to prevent movement and erosion during high flow events in the Choconut Creek. Additionally, a paved access road will be extended off Robert Street, to the northwestern side of the pump station. This access road will include compacted granular backfill, a geogrid fabric placed on prepared subgrade, 12 inches of a crushed stone subbase per NYSDOT 304.12, and new asphalt cover with a 2-foot shoulder.

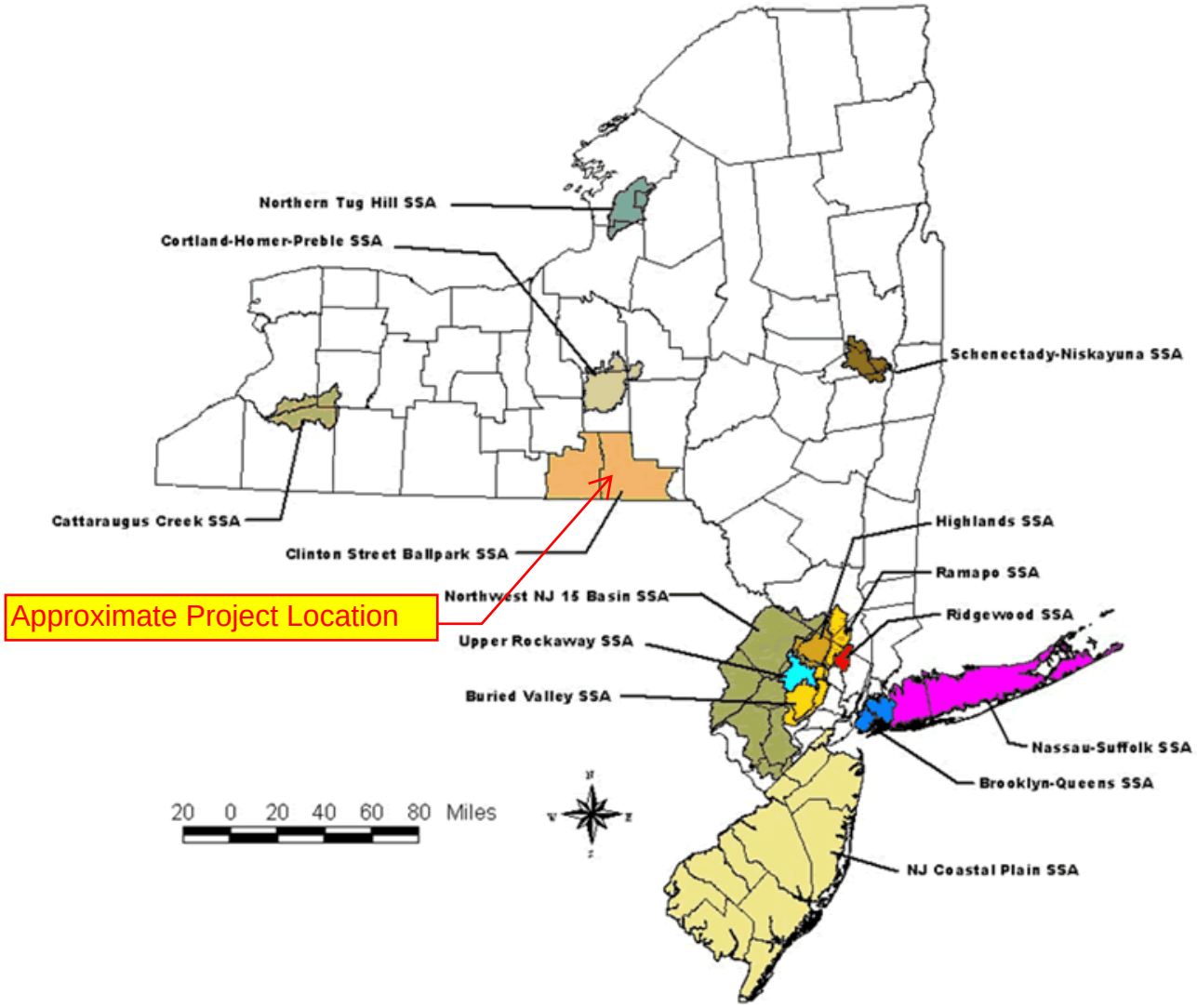

http://www.epa.gov/region02/water/aquifer/

Attachment C

HUD Environmental Standards Review

Project: Robert Street Stormwater Pump Station Upgrade – Town of Vestal

Introduction: The purpose of this review is to ensure that the project complies with HUD environmental standards in relation to 24 CFR Part 58.5. -Properties that are proposed for use in HUD programs "must be free of hazardous materials, contamination, toxic chemicals and gases, and radioactive substances, where a hazard could affect the health and safety of occupants or conflict with the intended utilization of the property."

A desktop review was performed to identify whether the Property referenced in the title of this document complies with the following criteria:

(i) is not Listed on an EPA Superfund National Priorities or Comprehensive Environmental Response Superfund National Priorities or Comprehensive Environmental Response, Compensation, and Liability Act (CERCLA) List, or equivalent State list;
(ii) is not located within 3,000 feet of a toxic or solid waste landfill site;
(iii) does not have an underground storage tank;
(iv) is not known or suspected to be contaminated by toxic chemicals or radioactive materials.

Project Description:
This project involves Community Development Block Grant – Disaster Recovery (CDBG-DR) program funding for the conversion of a defunct sanitary sewer pump station to a stormwater pump station. The converted pump station will drain to a stormwater retention swale located directly adjacent to the pump station when stormwater begins to pond within the adjacent neighborhood.

Summary of Findings:
The Subject Property where the pump station is located is not listed on a U.S. Environmental Protection Agency (EPA) Superfund National Priorities or Comprehensive Environmental Response, Compensation, and Liability Act (CERCLA) list or equivalent State list, and is not located within 3,000 feet of a toxic or solid waste landfill site. Based on review of the NYSDEC Bulk Storage database, the Subject Property does not have underground or above-ground storage tanks, and is not known or suspected to be contaminated by toxic chemicals or radioactive materials. Moreover, a review of the NYSDEC Spill Incident database revealed no spills on the Subject Property.

There are 16 EPA-listed facilities located within 3,000 feet of the Subject Property. Fifteen of these facilities have no reported violations and are located cross- or down-gradient from the Subject Property. However, the remaining EPA water discharger facility is Vestal MS4 Storm Sewers town-wide facility. This facility is documented for being in noncompliance for two quarters, between 4/1/2014 and 9/30/2014, for both a schedule event violation and for violations found during a MS4 audit. Additionally, the audit determined that the Vestal MS4 system was in noncompliance with certain terms and conditions of the NYSDEC MS4 General Permit. Those violations included failure to fully: 1) implement and update the Stormwater Management Program Plan, 2) develop and implement an illicit discharge detection and elimination program, 3) develop and implement a stormwater construction program, 3) develop and implement a post-construction program, and 4) develop and implement a pollution prevention and good housekeeping program and 5) complete self-assessments of municipal facilities, as required. An Administrative Compliance Order was issued to order the Town of Vestal to comply with MS4 General Permit conditions, and a settlement was reached on 2/11/2015. Due to the nature of these stormwater violations, it is unlikely these facilities would have had a deleterious environmental impact on the Subject Property. Therefore, these reported violations are unlikely to adversely affect the Subject Property or conflict with the intended utilization of the Subject Property.

There is one reported spill on nearby flood control property which consisted of an unknown amount of waste oil. This spill was closed by the NYSDEC on 10/21/1994. A spill closure by the NYSDEC

indicates that the records and data submitted for the spill demonstrated that the necessary cleanup and removal actions have been completed and no further remedial actions are necessary; or the case was closed for administrative reasons (e.g. multiple reports of a single spill consolidated into a single spill number). As such, this spill is not considered a hazard that could affect the health and safety of occupants or conflict with the intended utilization of the Subject Property. There are several bulk storage and hazardous waste handlers within a 3,000-foot radius of the Subject Property. However, given the distance of these sites from the Subject Property and/ or a hydraulic barrier (i.e. Choconut Creek) between the sites and the Subject Property, these bulk storage and hazardous waste handlers are not expected to contaminate the Subject Property.

There is one State Superfund Site located northwest of the Subject Property at a distance of about 3,100 feet. The groundwater from this site flows northwest according to NYSDEC reports and, thus, will not affect the Subject Property which is southwest of the Superfund Site.

A review of the EPA Resource Conservation and Recovery (RCRA) and NYSDEC Environmental Remediation databases provide no indication of past uses of the surrounding properties that could contaminate the Subject Property or potentially adversely affect the occupants of the adjacent properties. The project involves only minor excavation of soils near the pump station, which will remain onsite. If there are construction wastes generated, according to the type of waste generated, it will be disposed of according to construction waste management practices in an appropriate, legally compliant receiving facility.

Summary: Based on the project description, the scope of work is not expected to have disturbed contaminated soils or groundwater. The funded activities do not involve actions that would involve potential recognized environmental conditions/contamination. Therefore, a Phase I Environmental Site Assessment (ESA) or Phase II ESA is not warranted. As such, no further action is required at this time. Maps, DEC, and EPA reports are provided at the end of this report.

Data Sources: Tectonic has reviewed the following sources to make the above determinations: Hazardous Waste records contained in the Resource Conservation and Recovery Act Information (RCRA), the Comprehensive Environmental Response, Compensation, and Liability Information System (CERCLIS) for sites listed under the Comprehensive Environmental Response, Compensation, and Liability Act (CERCLA (otherwise known as Superfund)), EPA's Toxic Release Inventory database (TRI), and the EPA Radiation Information Database (RADInfo). RCRA includes data on small and large quantity hazardous waste material generators and handlers. EPA's Toxic Release Inventory provides information on toxic chemical releases and waste management activities by certain industries. The RADInfo database provides information about facilities that are regulated by the U.S. EPA for radiation and radioactivity.

Tectonic reviewed the NYS DEC Remedial Site Database to assess whether the project site is registered as a NYS Superfund or Environmental Restoration site. The DEC Remedial Database includes records of sites that are part of the NYS Superfund, Brownfield Cleanup, Environmental Restoration, and Voluntary Cleanup Programs. The database also includes a Registry of Inactive Hazardous Waste Disposal Sites. Tectonic reviewed the NYSDEC Bulk Storage Database to determine if the project area has an underground storage tank (which is not a residential fuel tank), or other registered storage tanks. The NYSDEC Bulk Storage Database was reviewed for records of facilities that are or have been regulated according to one of the Bulk Storage Programs- Petroleum Bulk Storage, Chemical Bulk Storage, or Major Oil Facility. The NYSDEC Spill Incident Database was used to determine the potential effects of spills on or near the Property. A desktop review of Google Earth was used in conjunction with a map of active municipal landfills (provided by the DEC), and a list of landfills provided by the DEC to determine whether a non-active or active landfill is located within 3,000 feet of the Subject Property.

UNITED STATES ENVIRONMENTAL PROTECTION AGENCY
REGION 2
290 BROADWAY
NEW YORK, NY 10007-1866

NOV 18 2016

Ms. Alicia Shultz
Community Developer – Environmental Services
New York State Homes & Community Renewal
38-40 State Street
Hampton Plaza, 4th Floor
Albany, NY 12207-2804

Dear Ms. Shultz:

This is in response to your October 3, 2016 letter to the U.S. Environmental Protection Agency (EPA) requesting a Sole Source Aquifer review of the proposed "Robert Street Stormwater Pump Station Upgrade" project located in the Town of Vestal, Broome County, New York. We have since received additional information and have completed our review. The project is to receive funding from the U.S. Department of Housing and Urban Development's Community Development Block Grant – Disaster Recovery program (CDBG-DR). The Town of Vestal has applied for CDBG-DR funding through the NY Rising Community Reconstruction Program. The project site is located in the Clinton Street Ballpark Aquifer System, designated by the EPA as a Sole Source Aquifer on January 14, 1985 (citation 50 CFR 2025). Therefore, our review has been conducted in accordance with Section 1424(e) of the Safe Drinking Water Act (SDWA).

The pump station is located at 549 Vestal Parkway just to the west of where Robert Street dead ends. The proposed project entails the conversion of a defunct sanitary pump station to a stormwater pump station, and involves the combined use of the converted pump station as well as two new outfall pipes in order to drain ponding stormwater into Choconut Creek, a tributary of the Susquehanna River. The information provided states that under high flow conditions (and without the repurposed pump station), local flooding is experienced by the residences in the Robert Street neighborhood. The purpose of the project is to reduce flood risk to this area.

The pump station would be part of a drainage system that collects stormwater runoff from approximately 117 acres within the Town of Vestal, including a small portion of NYS Route 434. Based on the information provided, we understand that stormwater runoff would initially enter an existing New York State Department of Environmental Conservation (NYSDEC) retention pond that drains directly into Choconut Creek via a valve-equipped culvert. However, we note that when the elevation of Choconut Creek rises above that of the retention pond, the valve is closed and stormwater buildup in the pond will be diverted to the proposed, re-purposed pump station. Only during high-flow conditions will the pump station receive stormwater. The information provided states that, currently (without the repurposed pump station), with the Creek at high flood level, and the NYSDEC pond full, the stormwater backflows under Vestal Parkway and into the local neighborhood.

The information provided indicates that the existing, above-grade pump station will be removed and replaced by a free-standing, pavilion-type structure. The below-grade pump station infrastructure will be modified to include two 100-horsepower, electrically-powered, submersible pumps. Stormwater will enter the unit by gravity via a 36-inch diameter, smooth-interior, corrugated polyethylene pipe. Two new, 16-inch diameter, ductile iron outfall pipes, that widen to 24 inches in diameter (in order to reduce the velocity of the discharge), and equipped with "duckbill" check valves at their discharge points, will conduct effluent to Choconut Creek. We note that the pipes will generally be buried in trenches averaging about 5-6 feet deep, and the backfill will be a mix of clean sand and clean gravel.

We understand that the depth to groundwater has not been determined. A 14-inch diameter asbestos cement pipe currently enters the pump station and an 8-inch diameter cast iron pipe exits it. These pipes were used at one time to carry sewage but have since been decommissioned and abandoned in place. Sanitary wastewater is now being collected and delivered to either the Binghamton-Johnson City Wastewater Treatment Plant (WWTP) or the Town of Endicott WWTP for treatment. The pump station will have no effect on sewage collection or disposal. We note that native vegetation will be used to reseed disturbed areas, and all topsoil and gravel used will be clean so as not to introduce contaminants into the area. Please see our recommendations below on environmentally-friendly landscaping as well as on stormwater and Low Impact Development.

Based on the information provided, the project satisfies the requirements of Section 1424(e) of the SDWA. Please be advised that meeting the requirements of 1424(e) does not preclude the need to meet National Environmental Policy Act (NEPA) requirements to address direct, indirect, and cumulative impacts. This review does not constitute a review under Section 309 of the Clean Air Act; EPA therefore reserves the right to review additional environmental documents on this project.

EPA offers the following for your consideration to reduce environmental impacts and to create a more sustainable project.

Clean Diesel:

Implement diesel controls, cleaner fuel, and cleaner construction practices for on-road and off-road equipment used for transportation, soil movement, or other construction activities, including:

- Strategies and technologies that reduce unnecessary idling, including auxiliary power units, the use of electric equipment, and strict enforcement of idling limits; and
- Use of clean diesel through add-on control technologies like diesel particulate filters and diesel oxidation catalysts, repowers, or newer, cleaner equipment.

For more information on diesel emission controls in construction projects, please see: http://www.northeastdiesel.org/pdf/NEDC-Construction-Contract-Spec.pdf

Stormwater:
We emphasize the importance of Low Impact Development (LID) principles such as minimizing effective imperviousness to create site drainage, and the planting of native and non-invasive vegetation on the project site for stormwater management purposes. Other LID practices can include bioretention facilities, rain gardens, vegetated rooftops, rain barrels, and permeable pavements. For further information, please see the following website:
http://water.epa.gov/polwaste/green/

Encourage cost-efficient, environmentally friendly landscaping:
There are many benefits to making greener landscaping choices. For additional information, please see the following website:
http://www2.epa.gov/greenerproducts/identifying-greener-landscaping-choices

Energy-Efficiency:
Energy-efficient technologies should be incorporated into all aspects of the project. Please see the following website: http://www.energystar.gov

If you have any questions concerning this matter or would like additional information, please feel free to contact Rajini Ramakrishnan of my staff at (212) 637-3731.

Sincerely yours,

Rajini Ramakrishnan for GM

Grace Musumeci, Chief
Environmental Review Section

Attachment 10

Potential Environmental Justice Areas Map

Potential Environmental Justice Areas Map

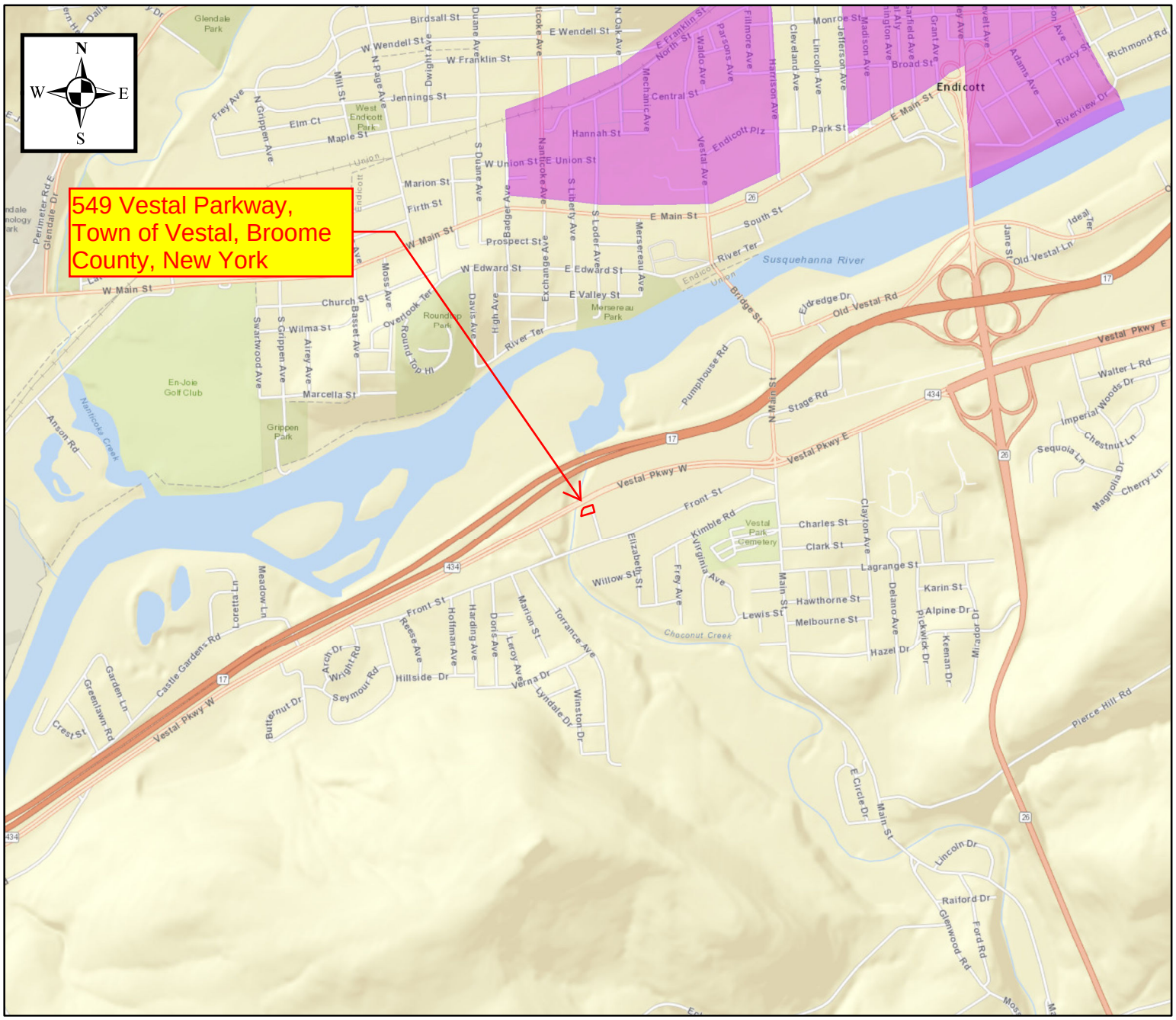

TECTONIC
Practical Solutions, Exceptional Service

0 1,250 2,500 5,000 Feet

1:24,000

Robert Street Stormwater Pump Station
Robert Street, Town of Vestal
Broome County, New York

Created: 11/22/2016

Data Sources:

Potential Environmental Justice Areas provided by The Office of Environmental Justice and available at http://www.dec.ny.gov/public/899.html

Legend

Vestal - Robert St

Potential Environmental Justice Areas