M E M O R A N D U M

To: CDBG-DR NY Rising Local Government Support Program, Nassau County Police Precinct 8 – ERR File

From: Thomas J. King, Certifying Officer
Governor's Office of Storm Recovery

Date: February 1, 2016

Subject: Second Re-evaluation of Environmental Assessment under 24 CFR 58.47- NY Rising Local Government Support Program, Nassau County Police Department 8th Precinct Station House Project

The NY Rising Local Government Support Program ("the Program") provides financial assistance to those counties outside of New York City that the U.S. Department of Housing and Urban Development (HUD) deemed most-impacted by Superstorm Sandy to address vulnerabilities exposed during major disasters declared under the Stafford Act (42 U.S.C. 4121 et seq.) in 2011, 2012, and 2013. Community Development Block Grant – Disaster Recovery (CDBG-DR) funds are allocated to eligible counties in order to effectively transform the State's infrastructure, transportation networks, energy supply, coastal protection, weather detection and warning systems, and emergency management programs. The Program is administered by the Governor's Office of Storm Recovery (GOSR), an office of New York State's Office of Homes and Community Renewal's Housing Trust Fund Corporation which serves as the responsible entity for direct administration of HUD's CDBG-DR program.

An Environmental Assessment was conducted for the Nassau County Police Department 8th Precinct Station House Project (Project) in accordance with HUD regulations at 24 CFR Part 58, and a combined *Finding of No Significant Impact* (FONSI) and *Notice of Intent to Request Release of Funds* (NOIRROF) was issued on May 11, 2015. On July 21, 2015, GOSR completed a Short Environmental Assessment Form documenting the Nassau County Police Precinct #8 Station House project funded by CDBG-DR as an Unlisted Action pursuant to SEQRA with a finding of no significant adverse environmental impacts (Negative Declaration). The project includes funding to demolish the existing Nassau County Police Department's (NCPD) 8th Precinct (8th Precinct) station house and associated facilities to construct a new station house (approximately 130 feet by 66 feet) and pre-fabricated garage to serve as the headquarters for the NCPD's 8th Precinct.

After the publication of the FONSI/NOIRROF and execution of the Negative Declaration, GOSR identified the need to revise the description of the proposed project in the Environmental Assessment with respect to the construction phases. GOSR re-evaluated the environmental review associated with the Project as outlined in a memo dated July 17, 2015. On October 21, 2015 Nassau County informed GOSR that the project description has once more been amended to include the reconstruction of a communication tower at a different location on site.

In re-evaluating the project in conformance with both the National Environmental Policy Act (NEPA) and the New York State Environmental Quality Review Act (SEQRA), GOSR analyzed the tower construction with regard to its potential environmental impacts. Having identified the only potential changes to the original effect determination to be those related to the Sole Source Aquifer review and compliance with the National Historic Preservation Act, GOSR engaged in limited secondary consultation. After conferring with both the United States Environmental Protection Agency (EPA) and the State Historic Preservation Office, GOSR has determined that the amendment to the project scope to include the communication tower reconstruction will not result in adverse environmental impacts. GOSR is cognizant of the fact that the Federal Communications Commission must review and approve this tower relocation and therefore, GOSR determination does not address those matters within the purview of the FCC.

In response to the abovementioned project revision and pursuant to 24 CFR 58.47 "Re-evaluation of environmental assessments and other environmental findings," the CDBG-DR Certifying Officer has conducted a re-evaluation of the findings associated with the original NY Rising Local Government Support Program, Nassau County Police Department 8th Precinct Station House Project EA. The original findings remain valid, and, accordingly, a new FONSI and RROF are not necessary.[1]

ATTACHMENTS:

-October 21, 2015 letter from Christopher L. Nolan to Tom King
-EPA Sole Source Aquifer Secondary Consultation and Response
-SHPO Secondary Consultation and Response

[1] 24 CFR § 58.47(b)(1) "If the original findings are still valid but the data or conditions upon which they were based have changed, the responsible entity must affirm the original findings and update its ERR by including this re-evaluation and its determination based on its findings. Under these circumstances, if a FONSI notice has already been published, no further publication of a FONSI notice is required."

EDWARD P. MANGANO
COUNTY EXECUTIVE

OFFICE OF THE COUNTY EXECUTIVE
THE THEODORE ROOSEVELT EXECUTIVE & LEGISLATIVE BUILDING
1550 FRANKLIN AVENUE
MINEOLA, NEW YORK 11501
516-571-3131

October 21, 2015

Tom King
Assistant General Counsel
Deputy Director – Bureau of Environmental Review and Assessment
Governor's Office of Storm Recovery
99 Washington Avenue Suite 1224
Albany, New York 12260
Office: (518) 473-0015

RE: Nassau County Police Department (NCPD) 8th Precinct (B50680-08G) Proposed New Station House and Garage – Installation of a Proposed New Public Safety Radio Communication Tower

Dear Mr. King:

This letter explains and justifies the construction of a proposed new Public Safety Radio Communication Tower as part of the NCPD 8th Precinct proposed new station house and garage.

The engineering plans and specifications and corresponding Housing and Urban Development (HUD) environmental compliance documentation indicate that 1) the demolition of the existing Station House would include the demolition of the existing Public Safety Radio Communication Tower and that 2) a Public Safety Radio Communication Tower would not be erected in conjunction with the new station house. Nassau County did not intend to erect a new Public Safety Radio Communication Tower for use with the new station house as this was considered to be outdated technology.

However, on June 17, 2015, Motorola deactivated the equipment on said tower and determined that the dispatch data coverage in the area was severely degraded and created a hazard to officer safety. Therefore, Nassau County proposes to construct a new Public Safety Radio Communication Tower on the east side of the new garage. The existing Public Safety Radio Communication Tower would remain in use at its current location until the completion of the proposed new Public Safety Radio Communication Tower.

The proposed new Public Safety Radio Communication Tower is anticipated to be an in-kind replacement of the existing tower, i.e., the foundation depth, height, and material composition would be the same for both towers. The existing Public Safety Radio

Communication Tower possesses the following equipment: four antenna arrays, which consist of two base station units at 120 feet, one microwave unit at 120 feet and a heli-net downlink at the very top. The heli-link allows for real time telemetry from the Police Department sources, i.e., video, voice, and data, such as from helicopters, hostage negotiation truck, security cameras, etc. The foundation depth is 25 feet 6 inches below grade. The proposed new Public Safety Radio Communication Tower would be outfitted with the same equipment configuration and would have the same foundation depth. The proposed new Public Safety Radio Communication Tower would be located on the east side of the new garage, which is approximately 80 feet east and 25 feet south of the location of the existing Public Safety Radio Communication Tower. The cost (approximately $500,000) of the proposed new Public Safety Radio Communication Tower would be covered by Nassau County.

The attached engineering drawings from Valmont (dated March 10, 2006) provide details on the existing Public Safety Radio Communication Tower foundation. As soon as drawings for the proposed new Public Safety Radio Communication Tower are available, they will be passed along to the New York State Governor's Office of Storm Recovery (GOSR) for review and approval. The proposed new Public Safety Radio Communication Tower would be part of the bid package for the new garage. Table 1 provides a comparison of the existing Public Safety Radio Communication Tower and the proposed new Public Safety Radio Communication Tower.

Table 1. Comparison of the Existing Public Safety Radio Communication Tower and Proposed New Public Safety Radio Communication Tower at the 8th Precinct Station House

	Number of Antenna/ Microwaves	**Foundation Depth**	**Site Location**
Existing Public Safety Radio Communication Tower	4	25 feet 6 inches	North-central side of existing Station House
Proposed New Public Safety Radio Communication Tower	4	25 feet 6 inches	East side of new Garage

The construction phase steps which were presented in our letter dated July 15, 2015 were anticipated to be:

- Post a Command Center at the western end of the 8th Precinct Station House site at 286 Wantagh Ave, Bethpage, NY to continue to provide community services without interruption during construction
- Demolish the existing station house and garage;
- At the same time, begin construction of new station house (duration of 20 months)
- Bid the garage by March 2016
- Begin construction of new garage half way through station house construction (duration of 9 months)

- Complete the construction of the station house and construction of the garage at the same time or earlier.

The construction phase steps would be revised to:

- Existing Station House remains in operation
- Existing Public Safety Radio Communication Tower remains in operation
- Post a command center at the western end of the 8th Precinct Station House site at 286 Wantagh Ave, Bethpage, NY to continue to provide community services without interruption during construction
- Begin construction of a new Station House (duration of 20 months)
- Bid the new garage and new Public Safety Radio Communication Tower by March 2016
- Begin construction of new Public Safety Radio Communication Tower.
- Upon completion of the new Public Safety Radio Communication Tower, demolish the existing station house, existing Public Safety Radio Communication Tower and existing garage
- Garage construction begins at the mid-point of the station house construction (duration of 9 months)
- Complete the construction of the station house and construction of the garage at the same time or earlier

The power and communication equipment, e.g., switch gear, for the proposed new Public Safety Radio Communication Tower would be located within the new garage. Since the proposed new Public Safety Radio Communication Tower would be constructed prior to the new garage, a temporary trailer would be brought on site to house this equipment until the completion of the new garage. Construction of the new the proposed new Public Safety Radio Communication Tower is estimated to take approximately six to eight months and would include bringing the temporary trailer on site to house the radio equipment until such time as the permanent storage space within the new garage is ready for use.

The proposed action is being submitted to your office for review consistent with HUD Regulations 24 CFR Part 58.5 and State Environmental Quality Review (SEQR), Chapter VI New York Code of Rules and Regulations (NYCRR) Part 617, Amended June 26, 2000 and Effective July 12, 2000. The proposed new Public Safety Radio Communication tower would be located within the existing site, used for the same purpose(s), and the foundation depth of the proposed new Public Safety Radio Communication Tower is anticipated to be the same foundation depth as the existing Public Safety Radio Communication Tower, i.e., 25 feet 6 inches. Nassau County believes the proposed action would not have a significant impact on the environment and therefore, does not require additional environmental review and/or clearance.

Nassau County respectfully requests GOSR's concurrence that the relocation of the existing Public Safety Radio Communication Tower within the site does not require additional environmental review and/or clearance.

Please feel free to contact Kelly Simmons (County representative) with any questions at (516) 571-5715 or at ksimmons@3pl-consulting.com.

Respectfully,

Christopher L. Nolan
Deputy Budget Director, Office of Management and Budget

Enclosures:
Valmont Engineering Drawings 1 to 4, dated 03-09-2006
Valmont Engineering Base Plate Anchorage Characteristics, dated 03-09-2006

Cc:
Shila Shah Gavnoudias, Commissioner, Department of Public Works
Rich Millet, Deputy Commissioner, Department of Public Works
Ken Arnold, Assistant to Commissioner of Public Works
Rakhal Maitra, Deputy Commissioner, Department of Public Works
Christopher Nolan, Nassau County OMB
Robert LaBaw, Architect III, Department of Public Works
Joseph Amerigo, Civil Engineer II, Department of Public Works
Kelly Simmons, 3PL Consulting
Michael Dorris, Jr. 3PL Consulting

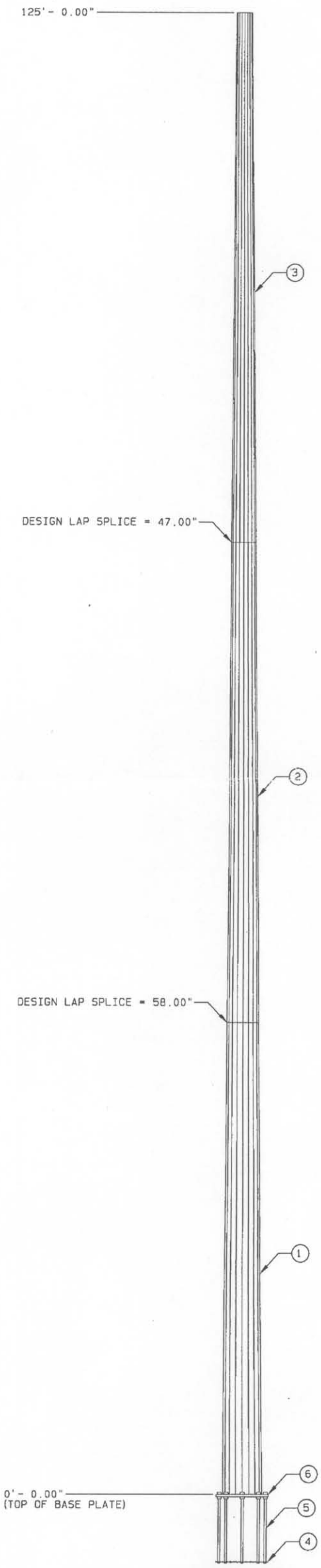

ITEM ID	NO. REQD	FEATURES	WEIGHT (LBS)
1	1	SECTION A	4,786
2	1	SECTION B	2,916
3	1	SECTION C	1,808
4	1	BOTTOM CAGE PLATE	96
5	8	2.25"-4.5 UNC-2A ANCHOR BOLT, LENGTH = 6.00' 9.25	791
6	1	BASE PLATE	1,263
	1	TOP CAGE PLATE (REMOVE BEFORE SETTING POLE)	126
	1	SAFETY CLIMBING CABLE (LENGTH = 115.00')	96
	2	GROUNDING LUG	2
		GALVANIZING	286
	103	STEP AND CLIP (VALMONT STANDARD)	1
	2	HAND HOLE (9" x 24")	56
	6	HAND HOLE (5" x 8")	17
	9	HAND HOLE (5" x 8")	17
	1	POLE CAP	20

HOLE COORDS (INCHES)	
X-COORD	Y-COORD
23.56	0.00
16.66	16.66
0.00	23.56

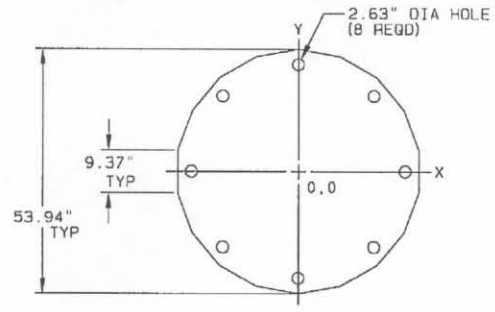

NOTES:
1. BASE PLATE THICKNESS = 2.250"
2. BASE PLATE ALLOWABLE STRESS (KSI) = 60
3. VENT AND DRAIN HOLES PROVIDED
4. MAXIMUM BOLT CIRCLE DIAMETER = 47.12"
5. MAXIMUM CAGE TEMPLATE DIAMETER = 53.12"

BASE PLATE / ANCHORAGE CHARACTERISTICS

NOTES:

1. REACTIONS FOR FOUNDATION DESIGN.
   MOMENT = 17,352 IN-KIPS
   SHEAR = 18,709 # 8%
   VERTICAL = 13,639 #

2. STRUCTURE DESIGN CONFORMS TO EIA/TIA-222-G INCLUDING:
   130.0 MPH WIND (3 SECOND GUST, 50 YR. RETURN PERIOD) NO ICE
   50 MPH ICE WIND (50 YR. RETURN PERIOD)
   DESIGN ICE THICKNESS = 0.75 INCHES
   EXPOSURE CATEGORY B
   STRUCTURE CLASSIFICATION III
   TOGRAPHY CATEGORY 1
   EARTHQUAKE SPECTRAL RESPONSE ACCELERATION AT SHORT PERIODS Sds =0.00
   60 MPH BASIC WIND SPEED WITH NO ICE FOR TWIST AND SWAY

3. GALVANIZED PER ASTM A-123.

4. THIS STRUCTURE HAS BEEN DESIGNED FOR THE FOLLOWING LOADING:
   A. CASE 1: WIND = 130 MPH
   B. CASE 2: WIND = 60 MPH
   C. CASE 3: WIND = 50 MPH, ICE = 0.75 INCH
   D. EQUIPMENT

DESCRIPTION	MTG HT. (FT)	CENTROID HT. (FT)	CENTROID ECC (FT)	WITHOUT ICE EPA (FT**2)	WITHOUT ICE WT (LBS)	WITH ICE EPA (FT**2)	WITH ICE WT (LBS)
1-Lightning Rod, 15'	125.00	132.50	0.00	3.60	100	5.10	126
2-PD201	120.00	123.88	0.00	2.04	8	3.62	26
2-Ant. Mnt., ATS, S	120.00	120.00	0.00	19.76	320	24.40	400
1-Std. MW Dish, 4' D	120.00	120.00	0.00	20.91	188	21.79	277
1-Std. MW Dish, 4' D	100.00	100.00	0.00	20.91	188	21.79	277

5. FEEDLINES ARE PLACED INTERIOR TO POLE SHAFT (UNLESS NOTED OTHERWISE).

SECTION INFORMATION					
ITEM ID	LENGTH	BASE OD	TOP OD	THK	MATL
1	44'- 9.00"	40.00"	31.05"	0.281"	S-22
2	44'- 6.00"	32.45"	23.56"	0.219"	S-22
3	44'- 6.00"	24.71"	15.81"	0.188"	S-22

Engineering Certified by:
John R. Erichsen, PE, SE
10321 Adams Road
Granger, IN 46530
574-277-0670

STATE OF NEW YORK
JOHN R. ERICHSEN
083361-1
LICENSED PROFESSIONAL ENGINEER

MAR 1 3 2006

ORDER	PROJECT	FILE ID	SCALE	DATE	ENGR
18957-66	23493R0	23493R0	NONE	03/09/06	WBR

DESCRIPTION
MOTOROLA 125' POLE, SITE: 8TH PRECINCT, LEVITTOWN, NY

valmont

SO# 18957-66

FOUNDATION NOTES

1. THIS FOUNDATION HAS BEEN DESIGNED FOR A TAPERED POLE TOWER. THE BASE REACTIONS USED IN THE DESIGN ARE:

MOMENT =	17352	IN-KIPS
SHEAR =	18709	LBS
VERTICAL =	13639	LBS

2. SOIL AS PER REPORT PSI, DATED: 11/22/05 (FILE: 444-55035)
3. CONCRETE TO BE 3000 PSI @ 28 DAYS. REINFORCING BAR TO CONFORM TO ASTM A615 GRADE 60 SPECIFICATIONS. CONCRETE INSTALLATION TO CONFORM TO ACI-318 (2002) BUILDING REQUIREMENTS FOR REINFORCED CONCRETE. ALL CONCRETE TO BE PLACED AGAINST UNDISTURBED EARTH FREE OF WATER AND ALL FOREIGN OBJECTS AND MATERIALS. A MINIMUM OF THREE INCHES OF CONCRETE SHALL COVER ALL REINFORCEMENT. WELDING OF REBAR NOT PERMITTED.
4. A COLD JOINT IS PERMISSIBLE UPON CONSULTATION WITH PIROD. ALL COLD JOINTS SHALL BE COATED WITH BONDING AGENTS PRIOR TO SECOND POUR.
5. ALL REINFORCING STEEL TO BE FORMED INTO A CAGE PRIOR TO SETTING INTO POSITION IN THE EXCAVATED PIER.
6. PERMANENT STEEL CASING SHALL NOT BE USED WITHOUT CONSENT FROM FOUNDATION DESIGNERS.
7. BENDING, STRAIGHTENING OR REALIGNING (HOT OR COLD) OF THE ANCHOR BOLTS BY ANY METHOD IS PROHIBITED.
8. CROWN TOP OF FOUNDATION FOR PROPER DRAINAGE.
9. FOUNDATION IS TO BEAR ON INSITU SAND AT APPROXIMATELY 25.5' BELOW GRADE. THE BEARING SURFACE IS TO BE FREE OF ANY LOOSE MATERIAL & SUBSEQUENTLY INSPECTED BY A QUALIFIED ON-SITE GEOTECHNICAL ENGINEER.
10. A TEMPORARY, FULL LENGTH STEEL CASING MAY BE REQUIRED DURING INSTALLATION.
11. IF MORE THAN 3" OF WATER IS PRESENT AT THE BOTTOM OF THE DRILLED SHAFT, EITHER WATER SHALL BE REMOVED OR CONCRETE SHALL BE PLACED USING THE TREMIE METHODS.
12. CONCRETE IS TO BE PLACED THE SAME DAY THAT THE EXCAVATION IS COMPLETED.
13. THE ON-SITE GEOTECHNICAL ENGINEER SHALL CONFIRM THAT THE INSITU SOIL STRENGTHS MEET OR EXCEED THOSE PARAMETERS GIVEN IN THE SOIL REPORT.

TOWER FOUNDATION

STATE OF NEW YORK
JOHN R. ERICHSEN
083361-1
LICENSED PROFESSIONAL ENGINEER

Engineering Certified by:
John R. Erichsen, PE, SE
10321 Adams Road
Granger, IN 46530
574-277-0670

MAR 1 3 2006

MOTOROLA INC
8TH PRECINCT, LEVITTOWN, NY
TP44 X 125'

REV	DESCRIPTION OF REVISIONS	INI	DATE
B	AUTOCAD EDITS	TMW	03/10/2006
A	CLONE FROM A-405864	TMW	03/10/2006

APPROVED/ENG.	TMW	3/10/2006
APPROVED/FOUND.	TMW	3/10/2006

COPYRIGHT 2006

DRAWN BY

valmont STRUCTURES
1-877-467-4763 Plymouth, IN
1-888-880-9191 Salem, OR

DRAWING NO. 197830

ENG. FILE NO. A-405865-
ARCHIVE F-1008601

PAGE 1 OF 4

From: F1008600.DFT - 03/10/2006 09:25
Printed from 197830_010B.DWG * 03/10/2006 10:51 @ 03/13/2006 16:09

TOP VIEW

TOP AND SIDE VIEWS ARE
DRAWN TO DIFFERENT SCALE

BASE FLANGE MUST BE CENTERED IN PIER
WITHIN +/- 10% OF PIER DIAMETER

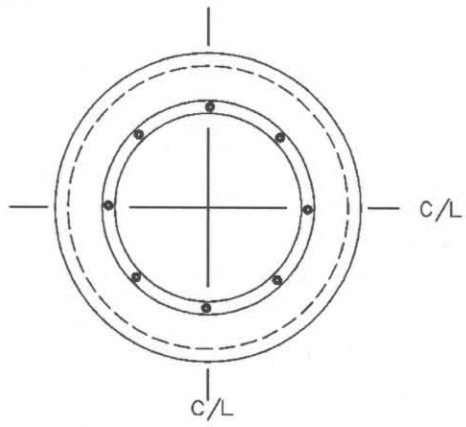

CROWN TOP OF FOUNDATION TO
FACILITATE DRAINAGE.

SIDE VIEW

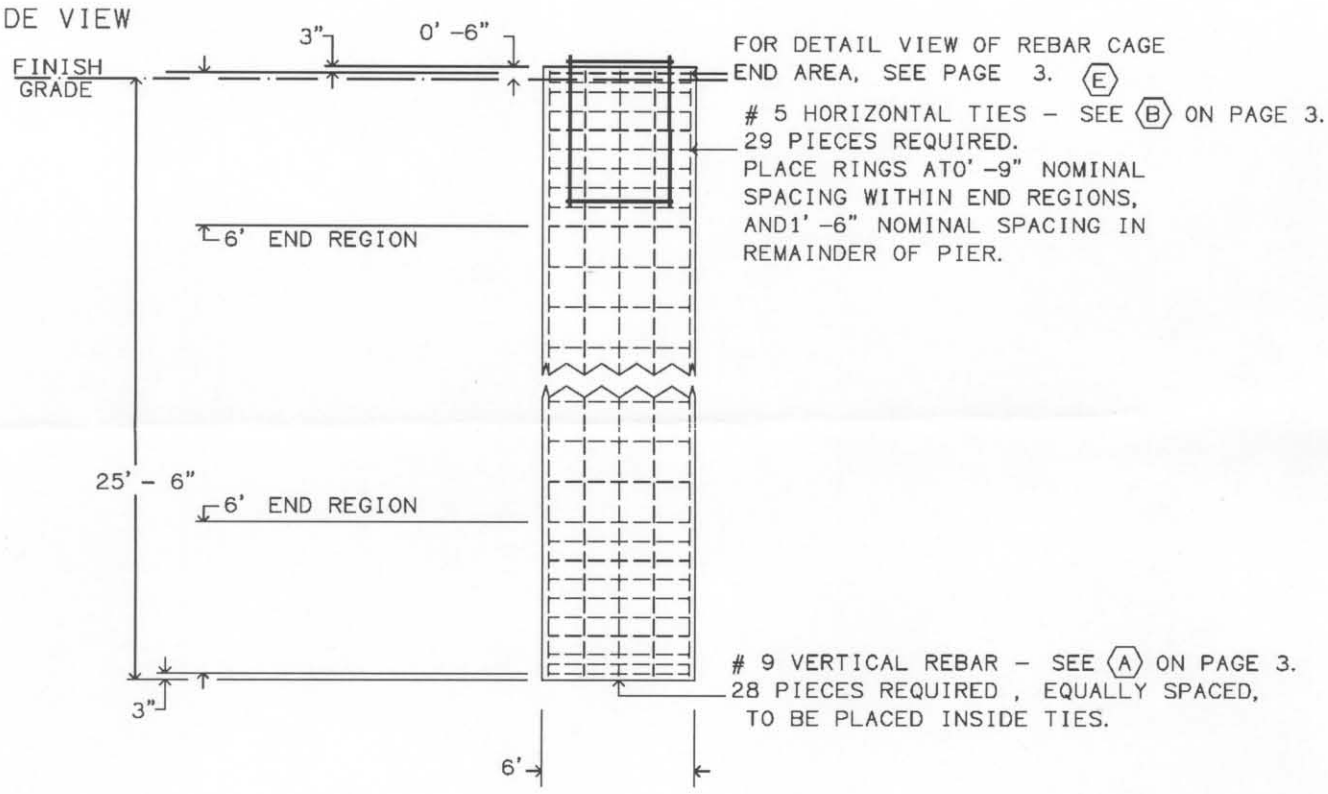

TOWER FOUNDATION

27.2 CUBIC YARDS CONCRETE REQUIRED

FOR INSTALLATION SPECIFICATIONS AND
ADDITIONAL INFORMATION, SEE PAGE 1
OF THIS DRAWING.

STATE OF NEW YORK
JOHN R. ERICHSEN
083361-1
LICENSED PROFESSIONAL ENGINEER

Engineering Certified by:
John R. Erichsen, PE, SE
10321 Adams Road
Granger, IN 46530
574-277-0670

MAR 1 3 2006

MOTOROLA INC
8TH PRECINCT, LEVITTOWN, NY
TP44 X 125'

REV	DESCRIPTION OF REVISIONS	INI	DATE
B	AUTOCAD EDITS	TMW	03/10/2006
A	CLONE FROM A-405864	TMW	03/10/2006

APPROVED/ENG.	TMW	3/10/2006
APPROVED/FOUND.	TMW	3/10/2006
COPYRIGHT 2006		
DRAWN BY		
ENG. FILE NO. A-405865-		
ARCHIVE F-1008601		

valmont STRUCTURES
1-877-467-4763 Plymouth, IN
1-888-880-9191 Salem, OR

DRAWING NO. 197830

PAGE 2 OF 4

From: F1008600.DFT - 03/10/2006 09:25
Printed from 197830_020B.DWG * 03/10/2006 10:49 @ 03/13/2006 16:09

(A)

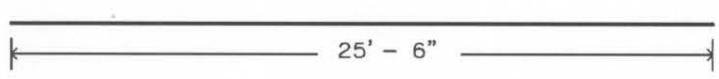

9 REBAR - 28 PIECES REQ. TOTAL
APPROX WT = 86.7# EACH, 2428# TOTAL

(B)

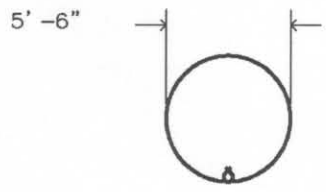

5 REBAR - 29 PIECES REQUIRED TOTAL
WITH 135 DEGREE HOOK ON EACH END
APPROX UNBENT LENGTH = 18' -10- 3/4"
APPROX WT = 19.7# EACH, 571# TOTAL

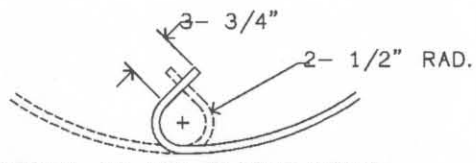

DETAIL OF 135 DEGREE HOOKS

PLACE REBAR RINGS SO THAT HOOKS ON ADJACENT RINGS ARE 180 DEGREES APART AND HOOKS ENCIRCLE A VERTICAL BAR. SEE PAGE 2 FOR RING PLACEMENT.

PLACE 9 CIRCULAR TIES WITHIN EACH END REGION (TOP AND BOTTOM). PLACE FIRST TIE AT END OF VERTICAL BARS AND CONTINUE SPACING AS SHOWN. SEE PAGE 2 FOR REGION DEFINITION.

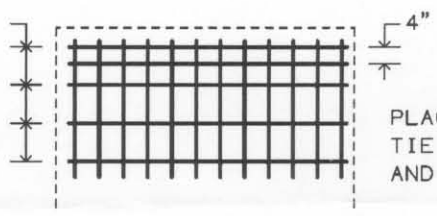

PLACE AN ADDITIONAL CIRCULAR TIE 4" FROM THE END TIE (TOP AND BOTTOM) AS SHOWN.

DETAIL OF REBAR CAGE END
(E)

TOWER FOUNDATION

REBAR DETAIL

TOTAL APPROX REBAR WEIGHT = 2999#
REINFORCING BAR TO CONFORM TO
ASTM A615 GRADE 60 SPECIFICATIONS.

STATE OF NEW YORK
JOHN R. ERICHSEN
083361-1
LICENSED PROFESSIONAL ENGINEER

Engineering Certified by:
John R. Erichsen, PE, SE
10321 Adams Road
Granger, IN 46530
574-277-0670

MAR 1 3 2006

MOTOROLA INC
8TH PRECINCT, LEVITTOWN, NY
TP44 X 125'

REV	DESCRIPTION OF REVISIONS	INI	DATE
B	AUTOCAD EDITS	TMW	03/10/2006
A	CLONE FROM A-405864	TMW	03/10/2006

APPROVED/ENG.	TMW	3/10/2006
APPROVED/FOUND.	TMW	3/10/2006
COPYRIGHT 2006		
DRAWN BY		
ENG. FILE NO.	A-405865-	
ARCHIVE	F-1008601	

valmont STRUCTURES
1-877-467-4763 Plymouth, IN
1-888-880-9191 Salem, OR

DRAWING NO. 197830
PAGE 3 OF 4

From: F1008600.DFT - 03/10/2006 09:25
Printed from 197830_03@B.DWG * 03/10/2006 10:50 @ 03/13/2006 16:10

BASE FLANGE MUST BE CENTERED IN PIER
WITHIN +/- 10% OF PIER DIAMETER.

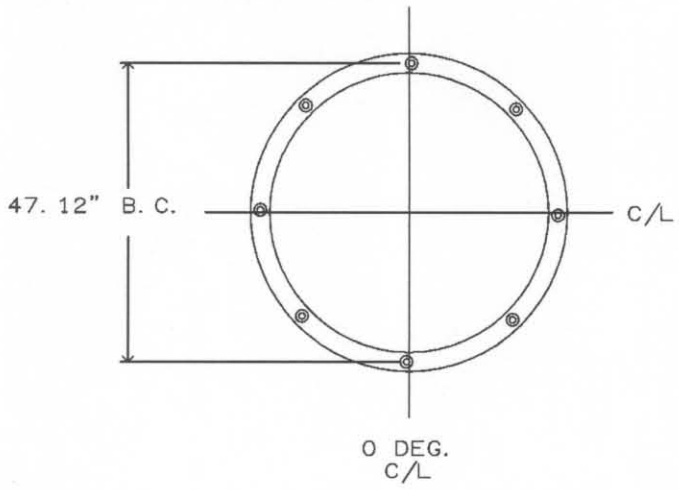

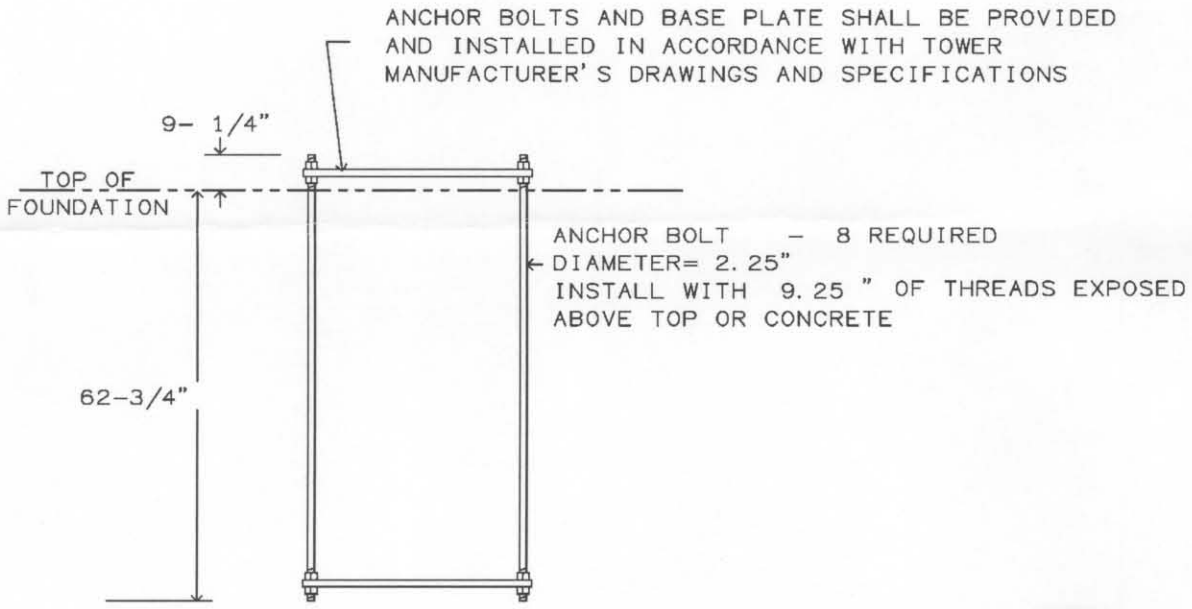

TOWER FOUNDATION

TOWER ANCHOR BOLT PLACEMENT

STATE OF NEW YORK
JOHN R. ERICHSEN
083361-1
LICENSED PROFESSIONAL ENGINEER

MAR 1 3 2006

Engineering Certified by:
John R. Erichsen, PE, SE
10321 Adams Road
Granger, IN 46530
574-277-0670

MOTOROLA INC
8TH PRECINCT, LEVITTOWN, NY
TP44 X 125'

REV	DESCRIPTION OF REVISIONS	INI	DATE
A	CLONE FROM A-405864	TMW	03/10/2006

APPROVED/ENG.	TMW	3/10/2006
APPROVED/FOUND.	TMW	3/10/2006
COPYRIGHT 2006		
DRAWN BY		
ENG. FILE NO.	A-405865-	
ARCHIVE	F-1008601	

valmont STRUCTURES
1-877-467-4763 Plymouth, IN
1-888-880-9191 Salem, OR

DRAWING NO. 197830

PAGE 4 OF 4

From: F1008600. DFT - 03/10/2006 09: 25
Printed from 197830_04@A. DWG * 03/10/2006 10: 55 @ 03/13/2006 16: 10

December 9, 2015

Grace Musumeci
United States Environmental Protection Agency
Region II, Water Programs
290 Broadway, 24th Floor
New York, NY 10007-1866

RE: Follow-up Letter to Request for Agency Coordination/Concurrence Regarding Potential Impact of the Proposed Action(s) on the Nassau-Suffolk Sole Source Aquifer – Proposed New Building at Nassau County Police Precinct #8

Dear Ms. Musumeci:

On February 20, 2015, the Nassau County Department of Public Works (NC DPW) submitted a request for your response with regard to the potential impact of the proposed activity at Nassau County Police Precinct #8 on the Nassau-Suffolk Sole Source Aquifer. NC DPW received your response on April 1, 2015, stating that the Proposed Project satisfies the requirements of Section 1424(e) of the Safe Drinking Water Act.

Nassau County has since updated the proposed activity to include the relocation and construction of a new Public Safety Radio Communication Tower as part of the new 8th Precinct station house and garage project. The depth of the foundation for the proposed new tower would be 25 feet. The results of soil borings drilled within 120 feet of the location of the proposed new tower indicate that depth to groundwater would be at 28 feet. The existing tower would remain operational during construction of the proposed tower, and upon completion of the new tower the old tower would be deconstructed and removed from the premises. Actual depth to groundwater will be determined prior to excavation through a soil boring of up to 40 feet in depth to assess in situ soil conditions.

The attached Aerial Image shows the location of the existing tower, the proposed location for the new tower, and the location of the nearest soil boring. The attached Log of Boring B-8 and Soil Boring Sheet 3 of 3 provide indication that the depth to groundwater at the location of the proposed new tower would be greater than the depth to groundwater at soil boing B-8.

Based on the information provided, NC DPW, in coordination with the New York State Governor's Office of Storm Recovery (GOSR), does not believe that the alterations to the proposed activity will have an effect on your initial determination that the proposed activity satisfies the requirements of Section 1424(e) of the Safe Drinking Water Act. NC DPW and GOSR respectfully request your concurrence with this determination.

Please feel free to contact me with any questions (518) 473-0015.

Sincerely,

Thomas J. King
Bureau of Environmental Review and Assessment Assistant, Director
NYS Governor's Office Storm Recovery

NCPD 8th Precinct - Proposed Radio Tower Relocation

0 62.5 125 250 375 500 Feet

Project Site/Parcel

Nassau County Department of Public Works, 2015

Project: Nassau County Police Department- 8 B8 Project Location: Precinct 8 Wantagh Ave Bethpage NY Project Number:	Log of Boring B-8 Sheet 1 of 2

Date(s) Drilled	March 23, 2015	Logged By	Morley & Glenn	Checked By	Kathleen M Hand P.E.
Drilling Method	ASTM D 1586 Standard Test / Penetration Test /Split Barrel soil sample	Drill Bit Size/Type	3-1/4 inch Cutter Head	Total Depth of Borehole	50 feet bgs
Drill Rig Type	ACKER 30	Drilling Contractor	Universal Drilling	Approximate Surface Elevation	N/A feet
Groundwater Level and Date Measured	28 feet on 3/23/15	Sampling Method(s)	None	Hammer Data	140 lb, 30 in drop,
Borehole Backfill	Cuttings	Location			

Elevation, feet	Depth, feet	Sample Type	Sample Number	Sampling Resistance, blows/foot	Relative Consistency	USCS Symbol	Graphic Log	MATERIAL DESCRIPTION	REMARKS AND OTHER TESTS
	0					Asphalt		asphalt	
			S-1	4 10 16 14		Misc		Top Soil - Brown Fine Sand & Gravel	
			S-2	13 10 8 8		PT		Peat	
	5		S-3	7 14 16 28		PT		Peat the Red Fine Sand with Heavy Gravel	
			S-3	27 39 38 37		SP		Light Brown Fine Sand & Gravel	
			S-5	27 32 30 34		SP		Light Brown Fine Sand & Gravel	
	10		S-6	19 26 40 37		SP		Light Brown Fine Sand & Gravel	
			S-7	42 33 28 25		SP		Light Brown Fine Sand & Gravel	
	15		S-8	40 31 35 30		SP		Light Brown Fine Sand & Gravel	
			S-9	35 35 22 27		SP		Light Brown Fine Sand & Gravel	
			S-10	35 38 41 50		SP		Light Brown Fine Sand & Gravel	
	20		S-11	10 28 32 36		SP		Brown Fine Sand & Gravel	
			S-12	33 29 24 22		SP		Brown Fine Sand & Gravel	
	25		S-13	40 26 26 30		SP		Brown Fine Sand & Gravel	
			S-14	63 35 39 36		SP		Brown Fine Sand & Gravel	
			S-15	26 27 37 36		SP		Brown Fine Sand & Gravel (ATD)	
	30								

Figure

STATE OF NEW YORK
KATHLEEN M HAND
072806
LICENSED PROFESSIONAL ENGINEER

C:\Documents and Settings\XP\My Documents\BORING LOGS IBTS\Nassau County Police 8 th precinct B-8.bgs [Basic Boring Log.tpl]

Project: Nassau County Police Department- 8 B8
Project Location: Precinct 8 Wantagh Ave Bethpage NY
Project Number:

Log of Boring B-8

Sheet 2 of 2

Elevation, feet	Depth, feet	Sample Type	Sample Number	Sampling Resistance, blows/foot	Relative Consistency	USCS Symbol	Graphic Log	MATERIAL DESCRIPTION	REMARKS AND OTHER TESTS
	30					SP		Brown Fine Sand & Gravel (cont.)	
			S-16	11 8 22 25		SP-CL		Brown Fine Sand & Gravel & 4 " Clay	
	35								
			S-17	15 19 24 22		CL		12 " Grey Clay 12" Sandy Clay (Grey in color)	
	40					CL		12" Grey Clay 12" Sandy Clay (Grey in Color)	
			S-18	7 8 11 12					
	45								
			S-19	22 33 33 36		CL		12" Grey Clay 12" Sandy Clay (Grey in Color)	
	50							Bottom of Boring at 50 feet bgs	
	55								
	60								
	65								

STATE OF NEW YORK
KATHLEEN M HAND
072806
LICENSED PROFESSIONAL ENGINEER

Figure

C:\Documents and Settings\XP\My Documents\BORING LOGS IBTS\Nassau County Police 8 th precinct B-8.bgs [Basic Boring Log.tpl]

BORING LOCATIONS WESTERN PORTION

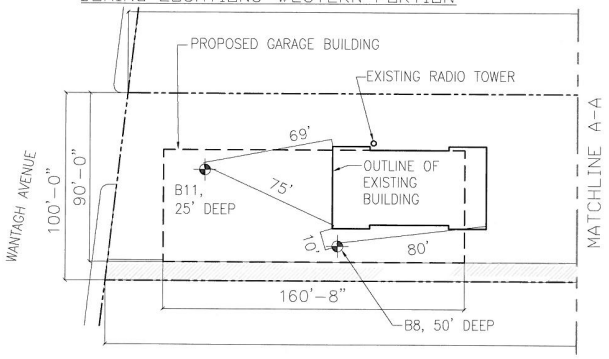

NOTES:

1. BORING LOCATIONS INDICATED ARE APPROXIMATE FINAL LOCATIONS WILL BE DETERMINED IN THE FIELD PRIOR TO BORING OPERATIONS AND AFTER UTILITY MARK OUTS.
2. BORINGS B8, B9 AND B10 ARE TO BE 50 FT IN DEPTH AND B11 IS TO BE 25 FT IN DEPTH.

LEGEND:

B2, 50' DEEP – IDENTIFICATION NUMBER AND BORING DEPTH

– BORING LOCATION

BORING LOCATIONS EASTERN PORTION

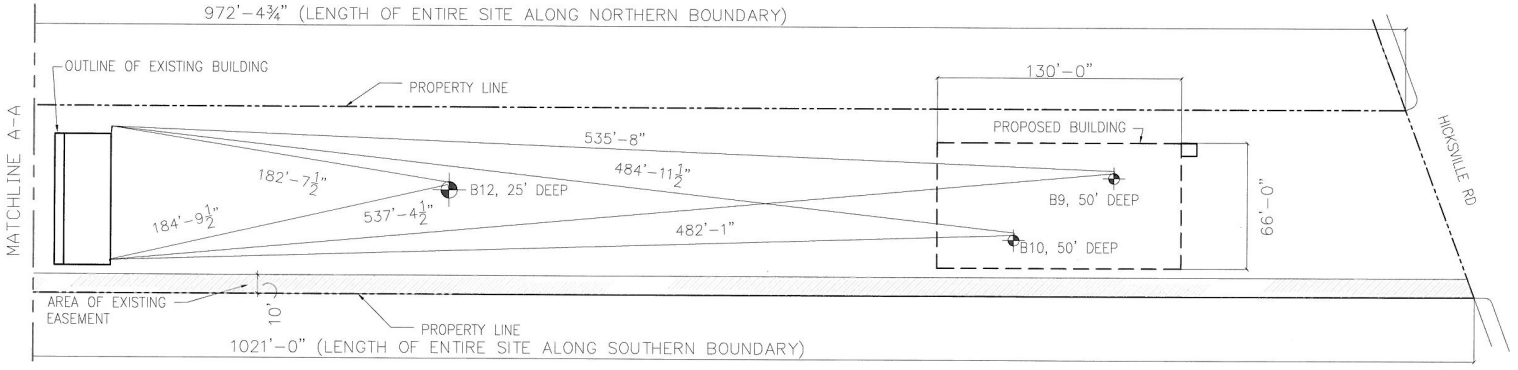

LOCATION MAP

WANTAGH AVE, BETHPAGE, NY

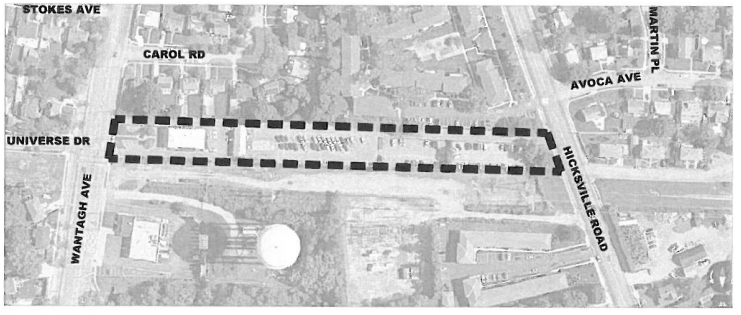

Nassau County DPW

1947

Contract No. B50680-08G

NO.	DATE	REVISIONS

In Charge:
Compilation:
Design:
Drawn: D.L.
Checked:
Reviewed:

SPECIAL NOTE:

LiRo ENGINEERS, INC.
SYOSSET, N.Y.

NASSAU COUNTY DPW

NASSAU COUNTY POLICE 4TH, 7TH, & 8TH PRECINCT

SOIL BORINGS

Scale: NTS
Date: JANUARY 2015
File No.
Sheet No. 3 of 3

UNITED STATES ENVIRONMENTAL PROTECTION AGENCY
REGION 2
290 BROADWAY
NEW YORK, NY 10007-1866

DEC 2 8 2015

Mr. Thomas J. King
Director – Bureau of Environmental Review
and Assessment
Governor's Office of Storm Recovery
25 Beaver Street
New York, NY 10004

Dear Mr. King:

This is in response to your letter dated December 9, 2015 requesting a Sole Source Aquifer (SSA) review of the proposed public radio communications tower for Nassau County Police Precinct #8 located in the Town of Oyster Bay, Nassau County, New York. The project is to receive funding from the U.S. Department of Housing and Urban Development's Community Development Block Grant - Disaster Relief program (CDBG-DR). The proposed project is located in the Long Island Nassau/Suffolk Aquifer System, designated by the Environmental Protection Agency (EPA) as a Sole Source Aquifer on June 21, 1978 (citation 43 FR 26611). Therefore, our review has been conducted in accordance with Section 1424(e) of the Safe Drinking Water Act (SDWA).

The EPA had previously approved, in a letter dated April 1, 2015, the demolition of an old facility and the construction of new structures at Police Precinct #8 located at 286 Wantagh Avenue. Since then, the project has been modified to include the relocation of a 125 foot communications antenna used by the police department.

We understand that a drill rig equipped with a 6-feet auger bit will drill a hole 25 feet deep, and that as the drill bit advances, a steel casing will be inserted, by a vibratory motion (essentially "wiggling" it down), to prevent the walls of the boring from collapsing. We note that the local water table, as determined by soil borings about 120 feet from the site of the installation, is 28 feet below grade, so the base of the borehole is approximately 3 feet above the water table. However, we understand that if water *is* observed at the bottom of the borehole, it will be pumped out as completely as possible, and then a 6-inch thick concrete base will be poured. We note that a lattice of metal re-bars will be lowered into the hole, and a total of about 27 cubic yards of concrete will then be poured around it. A plate containing eight upright bolts, about 5 feet long, will be lowered into the concrete to a depth such that the bolts extend out of the concrete surface about 4 inches. These bolts will be fastened to the anchor plate of the tower once the concrete has fully hardened (which will take about 28 days). We further note that soon after the concrete is poured, while it is still fluid, the steel casing will be slowly drawn up by

crane. We do not expect that surface water runoff will enter the space between concrete slug and the soil because there should be no space, and that the situation should be similar to the sealing of a groundwater well no longer in use, in which the well is filled with grout.

Based on the information provided, the project satisfies the requirements of Section 1424(e) of the SDWA. Please be advised that meeting the requirements of 1424(e) does not preclude the need to meet National Environmental Policy Act (NEPA) requirements to address direct, indirect, and cumulative impacts. This review does not constitute a review under Section 309 of the Clean Air Act; EPA therefore reserves the right to review additional environmental documents on this project.

At this time, EPA offers the following comments to minimize environmental impacts and to create a more sustainable project.

Clean Diesel:
Implement diesel controls, cleaner fuel, and cleaner construction practices for on-road and off-road equipment used for transportation, soil movement, or other construction activities, including:

- Strategies and technologies that reduce unnecessary idling, including auxiliary power units, the use of electric equipment, and strict enforcement of idling limits; and
- Use of clean diesel through add-on control technologies like diesel particulate filters and diesel oxidation catalysts, repowers, or newer, cleaner equipment.

For more information on diesel emission controls in construction projects, please see: http://www.northeastdiesel.org/pdf/NEDC-Construction-Contract-Spec.pdf

Stormwater:
We emphasize the importance of Low Impact Development (LID) principles such as minimizing effective imperviousness to create site drainage, and the planting of native and non-invasive vegetation on the project site for stormwater management purposes. Other LID practices can include bioretention facilities, rain gardens, vegetated rooftops, rain barrels, and permeable pavements. For further information, please see the following website: http://water.epa.gov/polwaste/green/

Encourage cost-efficient, environmentally friendly landscaping:
There are many benefits to making greener landscaping choices. For additional information, please see the following website: http://www2.epa.gov/greenerproducts/identifying-greener-landscaping-choices

Energy-Efficiency:
Energy-efficient technologies should be incorporated into the residences as well as all aspects of the project. Please see the following website: http://www.energystar.gov

If you have any questions concerning this matter or would like additional information, please feel free to contact Rajini Ramakrishnan of my staff at (212) 637-3731.

Sincerely yours,

for Grace Musumeci, Chief
Environmental Review Section

December 10, 2015

Mr. Larry K. Moss, Technical Specialist, Division for Historic Preservation
New York State Office of Parks, Recreation and Historic Preservation
Historic Preservation Field Services Bureau
Peebles Island Resource Center, P.O. Box 189
Waterford, NY 12188-0189

RE: Follow-up Letter to Request for Agency Coordination/Concurrence Regarding Potential Impact to Historic Resources – Proposed Building for Nassau County Police Department's Precinct #8

Dear Mr. Moss:

On February 20, 2015, the Nassau County Department of Public Works (NC DPW) submitted a request for your response with regard to historic preservation review consistent with Section 106 of the National Historic Preservation Act and HUD Regulations 24 CFR Part 58.5. NC DPW received your response on March 11, 2015 stating that the New York State Historic Preservation Office (SHPO) has determined that no historic properties will be affected by this undertaking.

Nassau County has since updated the proposed activity to include the relocation and construction of a new Public Safety Radio Communication Tower as part of the new 8th Precinct station house and garage project. Currently, the existing radio communication equipment is located in a room within the building to be demolished. In addition, the monopole that the existing radio antennas are mounted on needs to be removed to facilitate the demolition of the existing building and the construction of the new building.

In order to minimize system downtime during construction, NC DPW proposes to replace the existing 125 foot monopole tower with a new 125 foot monopole that is capable of expansion up to 150 feet in order to accommodate future growth (expansion not included in this project.) The depth of the foundation for the proposed new tower would be 25 feet. NC DPW is proposing a 6-foot x 16-foot shelter to temporarily house the radio equipment during construction. This shelter will be set in place on a gravel base at the site and transported to county storage upon completion of the construction. The existing radio tower would remain operational during construction of the proposed tower, and upon completion of the new tower, the old tower would be deconstructed and removed from the premises. The attached Aerial Image shows the proposed location for the new tower.

The construction of this new tower would be conducted within the boundaries of the Site previously submitted to SHPO, which has been noted to be previously disturbed. The Site and the adjacent properties are not currently listed on the State and National Register of Historic Places. Based on the information provided, NC DPW, in coordination with the New York State Governor's Office of

Storm Recovery (GOSR), does not believe that the alterations to the proposed activity will have an effect on your initial determination that no historic properties will be significantly affected. NC DPW and GOSR respectfully request your concurrence with this determination. Please feel free to contact me with any questions (518) 473-0015.

Sincerely,

Thomas J. King
Bureau of Environmental Review and Assessment Assistant, Director
NYS Governor's Office Storm Recovery

NCPD 8th Precinct - Proposed Radio Tower Relocation

0 62.5 125 250 375 500 Feet

Project Site/Parcel

Nassau County Department of Public Works, 2015

NEW YORK STATE OF OPPORTUNITY. | Parks, Recreation, and Historic Preservation

ANDREW M. CUOMO
Governor

ROSE HARVEY
Commissioner

December 29, 2015

Thomas King
Governor's Office of Storm Recovery (GOSR)
99 Washington Ave, Suite 1224
Albany, NY 12231

Re: GOSR/ HUD
Demolition and New Construction - Police Precinct #8
286 Wantaugh Ave, Bethpage/ Nassau County

15PR00823

Dear Mr. King:

Thank you for requesting the comments of the New York State Historic Preservation Office (SHPO). We have reviewed the submitted materials in accordance with Section 106 of the National Historic Preservation Act of 1966. These comments are those of the SHPO and relate only to Historic/ Cultural resources. They do not include other environmental impacts to New York State Parkland that may be involved in or near your project. Such impacts must be considered as part of the environmental review of the project pursuant to the National Environmental Policy Act and/or the State Environmental Quality Review Act (New York Environmental Conservation Law Article 8).

Based on this review, the opinion of the SHPO is that there will be No Historic Properties Affected by the proposed undertaking.

If I can be of further assistance, please contact me at (518) 268-2187 or Larry.moss@parks.ny.gov

Sincerely,

L Moss

Larry K Moss, Historic Preservation Technical Specialist

CC: Lelly Simmons, 3-PL Consulting