Barnes Avenue Sanitary Sewage Flow Diversion Project

Environmental Assessment

New York Governor's Office of Storm Recovery

Original Submission – April 29, 2015

Amended Submission – May 22, 2015

Barnes Avenue Sanitary Sewage Flow Diversion
Environmental Assessment

Original Submission – April 29, 2015
Amended Submission – May 22, 2015

Project Name:	Barnes Avenue Sanitary Sewage Flow Diversion Project
Project Location:	Village of Hempstead and Hamlet of East Meadow
HTFC SHARS #:	N/A
Federal Agency:	US Department of Housing and Urban Development
Responsible Entity:	New York State Homes and Community Renewal
Responsible Agency's Certifying Officer:	Thomas J. King, Assistant General Counsel and Certifying Officer
Project Sponsor:	Nassau County Department of Public Works
Primary Contact:	Joseph L. Davenport, P.E. Chief Sanitary Engineer, NCDPW Cedar Creek WPCP 3340 Merrick Road Wantagh, NY 11793 (516)571-7508 jdavenport@nassaucountyny.gov
Project NEPA Classification:	24 CFR 58.36 (Environmental Assessment)

Environmental Finding:	☒Finding of No Significant Impact - The project will not result in a significant impact on the quality of the human environment.
	☐Finding of Significant Impact - The project may significantly affect the quality of the human environment.
Certification	The undersigned hereby certifies that New York State Homes and Community Renewal has conducted an environmental review of the project identified above and prepared the attached environmental review record in compliance with all applicable provisions of the National Environmental Policy Act of 1969, as amended (42 USC Sec. 4321 et seq.) and its implementing regulations at 24 CFR Part 58.
Signature	Thomas J. King

Environmental Assessment Prepared By:	AKRF, Inc. 440 Park Avenue South, 7th Floor New York, NY 10016

CERTIFICATION OF NEPA CLASSIFICATION

It is the finding of the New York State Housing Trust Fund Corporation that the activities proposed in its 2015 NYS CDBG-DR project, Barnes Avenue Sanitary Sewage Flow Diversion are:

Check the applicable classification.

☐ Exempt as defined in 24 CFR 58.34 (a).

☐ Categorically Excluded as defined in 24 CFR 58.35(b).

☐ Categorically Excluded as defined in 24 CFR 58.35(a) and no activities are affected by federal environmental statues and executive orders [i.e., exempt under 58.34(a)(12)].

☐ Categorically Excluded as defined in 24 CFR 58.35(a) and some activities are affected by federal environmental statues and executive orders.

☒ "Other" neither exempt (24 CFR 58.34(a)) nor categorically excluded (24 CFR 58.35).

☒ Part or all of the project is located in an area identified as a floodplain or wetland. For projects located in a floodplain or wetland, evidence of compliance with Executive Orders 11988 and/or 11990 is required.

For activities excluding those classified as "Other", attached is the appropriate Classification Checklist (Exhibit 2-4) that identifies each activity and the corresponding citation.

Signature of Certifying Officer — Date: 5/22/2015

Thomas J. King — Assistant General Counsel and Certifying Officer

Print Name — Title

CERTIFICATION OF SEQRA CLASSIFICATION

It is the finding of the New York State Housing Trust Fund Corporation that the activities proposed in its 2015 NYS CDBG-DR project, Barnes Avenue Sanitary Sewage Flow Diversion constitute a:

Check the applicable classification:

- ☒ Type I Action (6NYCRR Section 617.4)
- ☐ Type II Action (6NYCRR Section 617.5)
- ☐ Unlisted Action (not Type I or Type II Action)

Check if applicable:

- ☐ Environmental Impact Statement (EIS) Prepared
  - ☐ Draft EIS
  - ☐ Final EIS

Signature of Certifying Officer

5/22/2015
Date

Thomas J. King
Print Name

Assistant General Counsel and Certifying Officer
Title

Description of the Proposed Project [24 CFR 50.12 & 58.32; 40 CFR 1508.25]**:**
The proposed project involves construction, renovation, and other modifications to the sewer system in the Village of Hempstead necessary to improve the capacity of the wastewater collection system and eliminate sanitary sewer overflows in the Barnes Avenue area of Baldwin, located downstream. In order to improve the capacity of the system, a volume of wastewater flow must be diverted to a portion of the system with adequate capacity for conveyance and treatment.

The project proposes construction of a new flow diversion pump station adjacent to the existing Weekes Park Pumping Station (the new "Hempstead Wastewater Pumping Station"), renovation of the Newmans Court Pumping Station, and installation of new force main piping under Front Street/Route 102, Ingraham Boulevard, Jerusalem Avenue, Meadowbrook State Parkway, and South Franklin Street to convey the redirected wastewater flow. In total, 17,890 linear feet of force main piping would be installed through a combination of open cut excavation and pipe jacking. Under the proposed configuration, up to 5.85 million gallons per day of wastewater flow would be redirected upstream of Baldwin to the County's Sewer Collection District No. 3 in North Merrick and ultimately treated and discharged from Cedar Creek WPCP.

Statement of Purpose and Need for the Proposal [40 CFR 1508.9(b)]:

On October 29th, 2012, Hurricane Sandy impacted the state of New York, as well as much of the northeastern U.S., causing widespread damage. The Barnes Avenue Interceptor was among the public infrastructure severely impacted by the storm due to flooding caused by the storm surge. The storm surge brought by Hurricane Sandy caused the sanitary sewer system flow to reverse. The pressure created resulted in raw sewage blowing through the manholes in the vicinity of Barnes Avenue and 3rd Place. Damages were sustained to the existing manhole structures, roadways, and residences Numerous residents in the vicinity of the project location reported that raw sewage infiltrated the floors and walls of their homes causing immense damages and potential health hazards such as salmonella, hepatitis A, and giardia. The Barnes Avenue Interceptor has a history of recurring losses. Documentation exists regarding six (6) events since the year 2000 during which the interceptor leaked or burst, flooding the surrounding community. It should be noted that the Nassau County sewer system is separate from its stormwater system. As noted in engineering reports prepared for Nassau County, rainfall damages have been known to occur, but flooding causes much more significant damages. The combination of rainfall and high tide increases the groundwater table which causes infiltration of water into the pipe.

Sanitary sewer overflows (SSOs) have occurred periodically at Barnes Avenue and Third Avenue in Baldwin for more than a decade. Sanitary sewer overflow is a condition in which untreated wastewater is discharged into the environment and is typically caused by either a surcharge of sewage flow or infiltration of large volumes of stormwater into the sanitary sewer system. According to the NY Rising Community Reconstruction Plan for Baldwin and Baldwin Harbor, Superstorm Sandy exacerbated the existing vulnerabilities in the wastewater collection and treatment system, breaching the sewer main in leading to Bay Park WPCP. Due to the severity of the resulting SSO event, a state of emergency was declared in the Barnes Avenue neighborhood.

The flow diversion project proposed herein addresses the vulnerabilities and capacity limitation in the sewer system by diverting wastewater generated upstream to a portion of the sewer system with adequate capacity for conveyance and treatment. In addition to improving the resiliency of the local

sewer system, the project would improve the capacity of the sewer collection system in the Village of Hempstead to a level necessary to sustain potential future development.

Existing Conditions and Trends [24 CFR 58.40(a)]:
The Weekes Park and Newmans Court Pumping Stations, as well as the proposed force main routes, are located within developed areas.

The flow diversion pump station site is a mapped Park (Weekes Park) and within the Downtown Overlay District (DO-4 Downtown Edge District). The Newmans Court pump station site is zoned industrial and is not within the DO-4. However, the new force main for the Newmans Court pump station is located in the DO-4 designated area. The proposed project is located in an urban/suburban setting with residential and commercial uses. The force main will cross under the Meadowbrook Parkway adjacent to Muellner Pond. All construction proposed as part of this project would be on previously disturbed land.

The Downtown Overlay Zones and Zoning Map Amendments SEQRA Findings Statement (SEQRA Findings), dated July 2, 2012, identified the Village of Hempstead's sanitary sewage collection infrastructure as a significantly impacted by clogging, breakage, inflow, infiltration and insufficient capacity. The SEQRA Findings go on to say that these issues constrain any opportunity for significant economic development and have the potential to negatively impact both the environment and public health.

The Village has been studying the existing sewer system through several State grants in order to determine the full extent of the sewer system deficiencies and identify opportunities for mitigation. As part of this ongoing analysis, the Village, in partnership with Renaissance Downtowns (Village-designated Master Developer), estimated the sanitary sewage flow generated by a build-out of the Downtown Overlay Zoning District to determine if the current system exhibits sufficient capacity to accommodate the planned development. It was found that the current system could not handle the estimated 1.1 million gallons per day (MGD) of additional sewage flow without significant capital improvements.

Subsequent to concluding the SEQRA process, the Village adopted the Downtown Overlay Zones and associated Zoning Map amendments that permit medium to high-density mixed-use development in downtown Hempstead subject to infrastructure thresholds and standards set forth in the SEQRA Findings. The County is working with the Village to ensure compliance with the SEQRA Findings while supporting economic development and sound land use practices in transit-served downtown Hempstead.

The attached Figure 1 provides an overall project location plan, Figure 2 provides a detailed project location plan in the vicinity of the Meadowbrook State Parkway Crossing, and Figure 3 provides a project map with the Federal Emergency Management Agency (FEMA) Special Flood Hazard Areas.

Funding Information

Estimated Total HUD Funded Amount: $7,020,625

Estimated Total Project Cost (HUD and non-HUD funds) [24 CFR 58.32(d)]**: $28,082,500**

Compliance with 24 CFR 58.5, and 58.6 Laws and Authorities

Record below the compliance or conformance determinations for each statute, executive order, or regulation. Provide credible, traceable, and supportive source documentation for each authority. Where applicable, complete the necessary reviews or consultations and obtain or note applicable permits of approvals. Clearly note citations, dates/names/titles of contacts, and page references. Attach additional documentation as appropriate.

Compliance Factors: Statutes, Executive Orders, and Regulations listed at 24 CFR §58.5 and §58.6	Are formal compliance steps or mitigation required?	Compliance determinations
STATUTES, EXECUTIVE ORDERS, AND REGULATIONS LISTED AT 24 CFR 50.4 and 58.6		
Airport Hazards 24 CFR Part 51 Subpart D	Yes ☐ No ☒	Not applicable. Based on guidance provided by HUD in Fact Sheet #D1, the National Plan of Integrated Airport Systems was reviewed for civilian, commercial service airports within the vicinity of the project site. No known civil airports are located within 2,500 feet and no known military airports are located within 15,000 feet of the project site. Therefore there are no anticipated adverse impacts.
Coastal Barrier Resources Coastal Barrier Resources Act, as amended by the Coastal Barrier Improvement Act of 1990 [16 USC 3501]	Yes ☐ No ☒	Not applicable. According to the Coastal Barrier Resource System maps, the proposed project is not located in a Coastal Barrier Resource System. Therefore, the proposed project would have no impact on any Coastal Barrier Resources. http://www.fws.gov/cbra/Maps/index.html
Flood Insurance Flood Disaster Protection Act of 1973 and National Flood Insurance Reform Act of 1994 [42 USC 4001-4128 and 42 USC 5154a]	Yes ☐ No ☒	Not applicable. Based on review of the Federal Emergency Management Agency (FEMA) Flood Insurance Rate Map (FIRM) (Panel 0229G), the portion of the project location that passes under the Meadowbrook State Parkway is located within the 100-year flood zone (see Figure 3). However, this portion of the project contains only subsurface force main piping and is exempt from the Flood Insurance requirement. https://msc.fema.gov/portal

STATUTES, EXECUTIVE ORDERS, AND REGULATIONS LISTED AT 24 CFR 50.4 & 58.5		
Clean Air Clean Air Act, as amended, particularly section 176(c) & (d); 40 CFR Parts 6, 51, 93	Yes ☐ No ☒	The proposed action would be located in Nassau County, which is within a maintenance area for inhalable particulate matter (PM2.5) and carbon monoxide, a marginal nonattainment area for the eight-hour ozone standard and considered an area source for hazardous air pollutants (HAPs) emissions. Therefore, a conformity analysis was made according to the requirements of 40 CFR 93, Subpart B (federal general conformity regulations) and a screening analysis was performed (see Appendix B) assuming that the emissions intensity per expenditure (tons per dollar) for the project would be similar to the average intensity of the construction sector in the county. Projects with projected construction expenditure substantially lower than the average construction *de minimis* expenditure would clearly not exceed *de minimis* emissions levels for general conformity purposes. Based on the screening analysis, the construction expenditure threshold for Nassau County is $410 million before a project may be expected to exceed the *de minimis* expenditure thresholds requiring further analysis or conformity determination. The estimated construction cost of the project is approximately $21.1 million, which is much less than the $410 million threshold; therefore the proposed project would not require further analysis for conformity determination. To further demonstrate compliance, the following specifications will be incorporated into the contract documents and a more detailed conformity analysis will be required to be completed for the bid package using the "General Conformity Worksheet" (see Appendix B)**.** - *Idling Restriction*. In addition to adhering to the local law restricting unnecessary idling on roadways, on-site vehicle idle time will also be restricted to five minutes for all equipment and vehicles that are not using their engines to operate a loading, unloading, or processing device (e.g., concrete mixing trucks) or otherwise required for the proper operation of the engine.

		- *Utilization of Newer Equipment.* EPA's Tier 1 through 4 standards for nonroad engines regulates the emission of criteria pollutants from new engines, including PM, CO, NOx, and hydrocarbons (HC). All nonroad construction equipment with a power rating of 50 hp or greater would meet at least the Tier 2 emissions standard to the extent practicable. - *Best Available Tailpipe Reduction Technologies.* Non-road diesel engines with a power rating of 50 horsepower (hp) or greater and controlled truck fleets (i.e., truck fleets under long-term contract with the project) including but not limited to concrete mixing and pumping trucks would utilize the best available tailpipe (BAT) technology for reducing DPM emissions. Diesel particulate filters (DPFs) have been identified as being the tailpipe technology currently proven to have the highest reduction capability. Construction contracts would specify that all diesel nonroad engines rated at 50 hp or greater would utilize DPFs, either installed by the original equipment manufacturer (OEM) or retrofitted. Retrofitted DPFs must be verified by EPA or the California Air Resources Board (CARB). Active DPFs or other technologies proven to achieve an equivalent reduction may also be used. In addition, the proposed emergency engines for operation of the project are subject to the stationary Reciprocating Internal Combustion Engine (RICE) Maximum Achievable Control Technology (MACT) regulations at 40 CFR 63 ZZZZ and the New Source Performance Standards (NSPS) at 40 CFR 60 IIII or 40 CFR 60 JJJJ that govern emission limits and compliance requirements for existing and new stationary RICE. Compliance will be demonstrated by purchasing engines certified to the limits in these regulations. As these emergency engines do not require NYSDEC permits or registrations, are not located at major sources of HAP emissions, and are not intended for use in demand response programs, the proposed project would not trip conformity thresholds, do not require notification, and would likely not result in direct nor indirect adverse impacts to air quality.

		http://www.epa.gov/airquality/greenbook/ http://www.epa.gov/airquality/greenbook/adden.html
Coastal Zone Management Coastal Zone Management Act, sections 307(c) & (d)	Yes ☐ No ☒	Not applicable. State agencies must complete a Coastal Assessment Form (CAF) as soon as the agency contemplates an action that may affect the policies for the coastal area or of an approved LWRP. The project site is not located within the boundaries of the New York State Coastal Area Boundary and is not located near a NYS-designated inland waterway. http://www.dos.ny.gov/opd/atlas/ http://appext20.dos.ny.gov/coastal_map_public/map.aspx http://www.dos.ny.gov/opd/programs/pdfs/Waterways_List_08-14.pdf
Contamination and Toxic Substances 24 CFR Part 50.3(i) & 58.5(i)(2)	Yes ☐ No ☒	Portions of the project area are located on both the NYSDEC Spills Incidents database (DEC ID no. 1401996) and the NYSDEC Environmental Site Remediation database (DEC ID no. 130184). The project site is located within 2,000 feet of several sites in the NYSDEC Environmental Site Remediation database (DEC ID nos. 130106, 130096, V00082, 130175, S130125, 130204, 130035, C130143). Current status of these identified sites are as follows: 1401996: 18 gal non-PCB oil, traffic accident (not closed) 130184: Class N, May 2012 sampling does not suggest further investigation 130096: Dry cleaner, SC 2000 V00082: Oil in dry wells, RA 1997 130175: Pesticides, RA 2008 130204: Old pesticides, RI 2011, RD 2013 130035: RI 2003 C130143: Chromium and nickel, RA 2012 To ensure no adverse effects to human health and the environment, the subsurface disturbance associated with the proposed project will be conducted in accordance with a site-specific Soil Mitigation Plan (SMP). The SMP would specify procedures for identifying and managing any suspected or unforeseen contaminated soil

		and/or underground storage tanks (including procedures for stockpiling and off-site transportation and disposal), environmental regulatory agency notification and/or reporting, and appropriate health and safety procedures, including the need for dust suppression.
Endangered Species Endangered Species Act of 1973, particularly section 7; 50 CFR Part 402	Yes ☐ No ☒	The proposed project involves the construction of 1,024 square feet of new pump station facilities and 17,890 linear feet of below-ground force main piping. All proposed project activities are located on previously disturbed sites. The USFWS Information, Planning and Conservation (IPaC) online planning tool Trust Resource List generated for the proposed project on March 19, 2015 (see Appendix B) lists the following Federally-listed species as having the potential to occur within the vicinity of the portion of the project location where vegetation clearing will occur adjacent to Meadowbrook State Parkway: piping plover (*Charadrius melodus*) - threatened, roseate tern (*Sterna gougallii*) - endangered, rufa red knot (*Calidris canutus rufa*) – threatened, northern long-eared bat (*Myotis septentrionalis*) - proposed for listing, sandplain gerardia (*Agalinis acuta*) - endangered, and seabeach amaranth (*Amaranthus pumilus*) - threatened. No habitat for piping plover, roseate tern, rufa red knot, sandplain gerardia and seabeach amaranth is present within the portion of the proposed force main route adjacent to Meadowbrook State Parkway, or the remaining portion of the force main alignment and pump station location and these species are not expected to occur within the project site. Therefore, the proposed project has no or little potential for effect to these species or the habitats on which these species depend. The limited amount of tree clearing that would occur for the project would only occur during the October 1 to March 31 tree clearing window to minimize adverse effects to northern long-eared bat, would result in minimal habitat loss, and would not result in fragmentation of a contiguous woodland area. For these reasons, the proposed project may affect but is unlikely to adversely affect the northern long-eared bat or the habitat

		on which this species depends. A consultation letter was submitted to the USFWS on April 2, 2015 for concurrence. The response received from USFWS dated April 22, 2015 indicates concurrence with the determination of no effect for piping plover, roseate tern, rufa red knot, sandplain gerardia, and seabeach amaranth and the determination of not likely to adversely affect for northern long-eared bat. (See Appendix A for correspondence).
Explosive and Flammable Hazards 24 CFR Part 51 Subpart C	Yes ☐ No ☒	Not applicable. This criterion is applicable to HUD-assisted projects that involve new residential construction, conversion of non-residential buildings to residential use, rehabilitation of residential properties that increase the number of units, or restoration of abandoned properties to habitable condition. The proposed project does not include these activities.
Farmlands Protection Farmland Protection Policy Act of 1981, particularly sections 1504(b) and 1541; 7 CFR Part 658	Yes ☐ No ☒	Not applicable. The project location is not located within an Agricultural District. It would not cause disturbance to Prime, Unique, or Statewide Important Farmland and would not involve the conversion of farmland to non-agricultural use. Therefore, the proposed project would not violate the Farmland Protection Policy Act. http://www.agriculture.ny.gov/ap/agservices/agricultural-districts.html
Floodplain Management Executive Order 11988, particularly section 2(a); 24 CFR Part 55	Yes ☐ No ☒	Based on a review of the Federal Emergency Management Agency (FEMA) Flood Insurance Rate Map (FIRM), a portion of the project that passes under the Meadowbrook State Parkway is located within a Special Flood Hazard Area in the 100-year floodplain (see Figure 3). Only subsurface force main piping will be located within the flood zone and would not adversely affect the floodplain and no impacts on floodplain management are anticipated. A Floodplain Management Plan was developed (Appendix B). https://msc.fema.gov/portal
Historic Preservation National Historic Preservation Act of 1966, particularly sections 106 and 110; 36 CFR Part 800;	Yes ☐ No ☒	The proposed project is adjacent to St. George's Church and the Rectory of St. George's Episcopal Church, both of which are included on the National and State registries. The New York State

Tribal notification for new ground disturbance.		Office of Parks, Recreation and Historic Preservation (OPRHP) was consulted. Based on the attached letter dated January 30, 2015, it has been determined that the proposed project has no potential to affect cultural resources, including resources on (or eligible for listing on) the National Register of Historic Places. In addition, after consulting the tribal directory information, it was determined that no tribes have identified an area of interest in Nassau County. (See correspondence in Appendix A)
Noise Abatement and Control Noise Control Act of 1972, as amended by the Quiet Communities Act of 1978; 24 CFR Part 51 Subpart B	Yes ☐ No ☒	The proposed project is not a noise sensitive use, and furthermore, the policies of 24 CFR 51.101(a)(3) do not apply to any action or emergency assistance under disaster assistance provisions or appropriations which are provided to protect property and protect public health and safety. The proposed project will cause temporary increases in noise levels during construction that will be mitigated by complying with local noise ordinances. Existing ambient noise levels will not be exceeded during operations. Therefore, the project would not generate any significant adverse noise impacts.
Sole Source Aquifers Safe Drinking Water Act of 1974, as amended, particularly section 1424(e); 40 CFR Part 149	Yes ☐ No ☒	The proposed project is located on the Nassau-Suffolk Sole Source Aquifer (SSA) system. An Initial Screen/Preliminary Review was submitted to the EPA on April 13, 2015 as per the Memorandum of Understanding (MOU) between EPA and HUD dated August 24, 1990. Comments from the EPA were received on May 15, 2015, a response was submitted on May 20, 2015, and EPA's approval was received on May 20, 2015. (See correspondence in Appendix A) No negative impacts to the Sole Source Aquifer are anticipated. The project will have a positive impact on the Sole Source Aquifer as it will prevent the existing sewage backups that are occurring during rain events. The proposed project would prevent impacts to the SSA and other sensitive environmental features due to these sewage backups. Two dry wells will be installed at a depth of 8 feet, greater than 3 feet above the water table. In

		addition, the dry wells will incorporate leaching rings. The 1,665 gallon diesel underground storage tank will be equipped with secondary containment, leak detectors, an overflow alarm and corrosion protection. The project must comply with all local groundwater protection and withdrawal provisions, including: -Article X of the Nassau County Public Health Ordinance (NCPHO). Note that no Special Groundwater Protection Area is mapped for the proposed project location. -Town of Hempstead NY Code, Chapter 70: Department of Water, Rates, and Regulations. -Nassau County Toxic and Hazardous Material Storage Program. Additionally, to minimize the potential for damage to the force main that would result in discharges to surface or groundwater, the portion of the force main installed under the stream bed will be encased in concrete. The proposed project would require a permit from the USACE under Section 404 of the Clean Water Act and from the NYSDEC under Article 24 of the NY Environmental Conservation Law for activities within freshwater wetlands. All permit conditions would be implemented. http://www.epa.gov/region02/water/aquifer/ http://www.nassaucountyny.gov/3054/11581/Ground-Water-Protection
Wetlands Protection Executive Order 11990, particularly sections 2 and 5	Yes ☐ No ☒	A portion of the project location is within 100 feet of a freshwater wetland as determined by the FWS Wetland Inventory map (see Appendix B). A Joint Application for Permit to permit the jacking, horizontal drilling, and force main placement for DEC wetlands and/or adjacent areas and to permit the placement of utility line under a navigable/historically-navigable waterway for USACE Section 404 and Section 10 via NWP 12 will be submitted for the proposed project.
Wild and Scenic Rivers Wild and Scenic Rivers Act of 1968, particularly section 7(b)	Yes ☐ No ☒	Not applicable. There are no Wild and Scenic Rivers within Nassau County, as designated by the U.S. Department of the Interior. There are no National Wild and Scenic Rivers System in Nassau

and (c)		County as designated by the National Wild and Scenic Rivers System. The project is not located along a Wild, Scenic and Recreational Rivers as determined by the NYSDEC. Therefore, the proposed project would not violate the Wild and Scenic Rivers Act. http://www.nps.gov/ncrc/programs/rtca/nri/states/ny.html http://www.rivers.gov/new-york.php http://www.dec.ny.gov/permits/32739.html
ENVIRONMENTAL JUSTICE		
Environmental Justice Executive Order 12898	Yes ☐ No ☒	The proposed project is in a potential environmental justice area as designated by NYSDEC. Since the proposed project would not result in the potential for significant adverse impacts, there are no disproportionate adverse impacts anticipated on the surrounding community. http://www.dec.ny.gov/docs/permits_ej_operations_pdf/nassauej.pdf

Environmental Assessment Factors [24 CFR 58.40; Ref. 40 CFR 1508.8 &1508.27] Recorded below is the qualitative and quantitative significance of the effects of the proposal on the character, features and resources of the project area. Each factor has been evaluated and documented, as appropriate and in proportion to its relevance to the proposed action. Verifiable source documentation has been provided and described in support of each determination, as appropriate. Credible, traceable and supportive source documentation for each authority has been provided. Where applicable, the necessary reviews or consultations have been completed and applicable permits of approvals have been obtained or noted. Citations, dates/names/titles of contacts, and page references are clear. Additional documentation is attached, as appropriate. **All conditions, attenuation or mitigation measures have been clearly identified.**

Impact Codes: Use an impact code from the following list to make the determination of impact for each factor.
(1) Minor beneficial impact
(2) No impact anticipated
(3) Minor Adverse Impact – May require mitigation
(4) Significant or potentially significant impact requiring avoidance or modification which may require an Environmental Impact Statement

Environmental Assessment Factor	Impact Code	Impact Evaluation
LAND DEVELOPMENT		
Conformance with Plans / Compatible Land Use and Zoning / Scale and Urban Design	2	No impact anticipated. All proposed project actions are consistent with existing land use and zoning. Flow Diversion Pumping Station Site is a mapped Park (Weekes Park) and within the Downtown Overlay District (DO-4 Downtown Edge District). The Newmans Court Pumping Station site is zoned industrial and is not within the DO-4. The new force main for the Newmans Court Pumping Station is located in the DO-4 designated area. The proposed project would not result in the creation of new jobs and/or an increase in the number of employees and would therefore not have an urbanizing effect.
Soil Suitability/ Slope/ Erosion/ Drainage/ Storm Water Runoff	2	No impact anticipated. Total area to be excavated is 4.2 acres (0.1 acres at Weekes Park PS and 17,890 lf x 10 ft wide trench for force main – 4.2 acres total). 1,700 sf of impervious surface to be added at the Weekes Park pump station. Stormwater runoff generated will be directed to the new on-site drywell in accordance with Nassau County Onsite Drainage Requirements, NYSDEC Stormwater Management Standards and the Village of Hempstead Stormwater Code. Appropriate soil erosion and sediment control best practices will be implemented during construction activities. In particular, soil erosion and sediment control measures would be in place for any construction activities associated with the pits constructed for pipe jacking.

Hazards and Nuisances including Site Safety and Noise	2	No impact anticipated. Impacts such as sidewalk closures and fugitive dust would be addressed under existing regulations governing construction activity in New York State, Nassau County, and local municipalities. The proposed project would only temporarily increase noise levels at nearby residences during construction and would be mitigated by implementing best management practices, including outfitting of equipment with mufflers, and compliance with local noise ordinances including time-of-day work limitations. Construction of the proposed project would not result in any significant increase in ambient noise levels. Existing ambient noise levels would not be exceeded during operations.
Energy Consumption	2	The proposed project would be adequately serviced with existing utilities, such as PSE&G and National Grid. The new Weekes Park pump station will require up to 3,800 kWhr per day and the Newmans Court pump station will require up to 1,020 kWhr additional per day. The proposed Hempstead Wastewater Pumping Station pumping units will be equipped with variable frequency drives (VFDs) to increase system energy efficiency. Construction of the proposed project would consume energy, including the use of fossil fuels, for construction equipment and the shipment of materials required for construction activities. However, the proposed project would not increase long-term energy consumption.

Environmental Assessment Factor	Impact Code	Impact Evaluation
SOCIOECONOMIC		
Employment and Income Patterns	2	No impact anticipated. The proposed project would create temporary jobs during construction. However, these jobs would not significantly increase employment opportunities or impact income patterns as construction duration is expected to be 15 months. Operation of the proposed project would not result in any changes to existing employment opportunities or impact income patterns.
Demographic Character Changes, Displacement	2	No impact anticipated. The proposed project would not result in the creation of new jobs and therefore would not alter the demographic characteristics of the surrounding community. The proposed project would not directly or indirectly displace people, businesses, institutions, or community facilities. The Weekes Park pumping station will be reconstructed at its current location, which is a Village-owned parcel that will be transferred

		to Nassau County. The parcel is a passive park with a flagpole and a stone monument commemorating two World War II Army generals. Due to the park's location amidst busy thoroughfares, it is not readily accessible and is therefore underutilized. The County is prepared to relocate the existing monument and flagpole to an alternate site within the Village of Hempstead. The above-ground structures of the pump station will total 1,024 square feet. Proposed building facades will conform to the design guidelines codified as part of the Village of Hempstead Downtown Overlay District. The site will be contained by a decorative perimeter fence. The proposed force main will be located entirely underground and any disruption to surrounding areas will be limited to temporary construction activities.

Environmental Assessment Factor	Impact Code	Impact Evaluation
COMMUNITY FACILITIES AND SERVICES		
Educational and Cultural Facilities	2	No impacts anticipated. The proposed project would not result in the creation of new jobs and therefore would not increase demand on educational facilities. There are 41 facilities serving children, the elderly, or people with disabilities located within 1,500 feet of the proposed pump stations and force main route (see Appendix B). Construction or operation of the proposed project would not impact these cultural facilities, as maintenance and protection of traffic (MPT) plans will be implemented as appropriate to facilitate continued access to nearby facilities.
Commercial Facilities	2	No impacts anticipated. The proposed project would not result in the creation of new jobs and therefore would not increase demand on commercial facilities nor have any adverse effects on existing facilities.
Health Care and Social Services	2	No impacts anticipated. The proposed project would not result in the creation of new jobs and therefore would not increase demand on health care and social services nor have any adverse effects on existing facilities.
Solid Waste Disposal / Recycling	2	No impacts anticipated. Construction of the proposed pump stations and force main route would result in the generation of waste, primarily paved asphalt, soil, and packed gravel. The amount of solid waste generated from construction would not significantly increase short-term generation of municipal solid waste as the total acreage would be 4.2 acres. All waste would be hauled off-site by the selected contractor and would be handled in accordance with the State's solid and hazardous waste rules.
Waste Water / Sanitary Sewers	1	The proposed project would improve the capacity and resiliency of the wastewater collection and treatment system.

		Stormwater runoff from the new Weekes Park Flow Diversion Pumping Station site would be directed to a new on-site drywell in accordance with Nassau County Onsite Drainage Requirements, NYSDEC Stormwater Management Standards, and the Village of Hempstead Stormwater Code.
Water Supply	2	No impacts anticipated. Operation of the proposed project would not generate any additional demand for water nor have any adverse effects on existing facilities.
Public Safety - Police, Fire and Emergency Medical	2	No impacts anticipated. The proposed project would not result in the creation of new jobs and therefore would not increase demand on police protection, fire protection, or emergency medical services nor have any adverse effects on existing facilities.
Parks, Open Space and Recreation	3	The location of the proposed Weekes Park Flow Diversion Pumping Station parcel is a small park with 3 trees, a flagpole and a small monument. The existing monument and flagpole may be relocated to an alternate site within the Village of Hempstead. An easement from the NYS Office of Parks, Recreation, and Historic Preservation (OPRHP) will be required and an application for this easement is currently being prepared.
Transportation and Accessibility	2	No impacts anticipated. The proposed project would not generate any additional demand for transportation or accessibility services nor have any adverse effects on existing facilities.

Environmental Assessment Factor	Impact Code	Impact Evaluation
NATURAL FEATURES		
Unique Natural Features, Water Resources	2	No impacts anticipated. The project is located on the Nassau-Suffolk Sole Source Aquifer system but is not anticipated to impact the Aquifer. A portion of the project location is within 100 feet of a freshwater wetland as determined by the FWS Wetland Inventory map (see Appendix B). A Joint Application for Permit to permit the jacking, horizontal drilling, and force main placement for DEC wetlands and/or adjacent areas and to permit the placement of utility line under a navigable/historically-navigable waterway for USACE Section 404 and Section 10 via NWP 12 will be submitted.
Vegetation, Wildlife	2	No impacts anticipated. The USFWS Information, Planning and Conservation (IPaC) online planning tool Trust Resource List generated for the proposed project location (see Appendix B) lists the following Federally-listed species as having the potential to occur within the vicinity of the portion of the project location where vegetation clearing will occur adjacent to Meadowbrook State Parkway: piping plover (*Charadrius melodus*) - threatened, roseate tern (*Sterna gougallii*) - endangered, rufa red knot

		(*Calidris canutus rufa*) – threatened, northern long-eared bat (*Myotis septentrionalis*) - proposed for listing, sandplain gerardia (*Agalinis acuta*) - endangered, and seabeach amaranth (*Amaranthus pumilus*) - threatened. No habitat for piping plover, roseate tern, rufa red knot, sandplain gerardia and seabeach amaranth is present within the portion of the proposed force main route adjacent to Meadowbrook State Parkway, or the remaining portion of the force main alignment and pump station location and these species are not expected to occur within the project site. Therefore, the proposed project has no or little potential for effect to these species or the habitats on which these species depend. The limited amount of tree clearing that would occur for the project would only occur during the October 1 to March 31 tree clearing window to minimize adverse effects to northern long-eared bat, would result in minimal habitat loss, and would not result in fragmentation of a contiguous woodland area. For these reasons, the proposed project may affect but is unlikely to adversely affect the northern long-eared bat or the habitat on which this species depends. A consultation letter was submitted to the USFWS on April 2, 2015 for concurrence. The response received from USFWS dated April 22, 2015 indicates concurrence with the determination of no effect for piping plover, roseate tern, rufa red knot, sandplain gerardia, and seabeach amaranth and the determination of not likely to adversely affect for northern long-eared bat. (See Appendix A for correspondence).
Other Factors	2	There are no other factors applicable to the proposed project.

Additional Studies Performed:

- NY Rising Community Reconstruction Plan: Baldwin. March 2014.
- SEQRA Expanded Environmental Assessment Form. October 2014.
- Technical Design Report: Flow Diversion Wastewater Pumping Station and Force Main Piping System and Newmans Court Pumping Station Improvements. Cameron Engineering & Associates, November 2014.
- Village of Hempstead Diversion Pump Station and Force Main Technical Considerations. Cameron Engineering & Associates, August 2013.
- Summary of Damages and Proposed Mitigation at the Barnes Avenue Interceptor. Hazen and Sawyer and Arcadis, January 2014.

Field Inspection (Date and completed by)**:**

NA

List of Sources, Agencies and Persons Consulted [40 CFR 1508.9(b)]**:**

- Daniel Rozell, New York State Department of Environmental Conservation (NYSDEC) (January 14, 2015)
- Larry K. Moss, New York State Office of Parks, Recreation, and Historic Preservation (NYSOPRHP) (January 30, 2015)
- Patricia Cole, U.S. Fish and Wildlife Service (USFWS) New York Field Office (April 2, 2015)
- Grace Musemeci, U.S. Environmental Protection Agency (USEPA) Environmental Impacts Branch (April 13, 2015)
- New York State Environmental Facilities Corporation (NYSEFC)
- New York State Department of Transportation (NYSDOT), Region 2
- Nassau County Department of Health (NCDH)
- Village of Hempstead (VOH)
- EPA, Greenbook: http://www.epa.gov/oaqps001/greenbk/index.html
- EPA, Greenbook – Federal Register Notices: http://www.epa.gov/oaqps001/greenbk/adden.html
- EPA NEPAssist: http://nepassisttool.epa.gov/nepassist/entry.aspx
- EPA Region 2 Sole Source Aquifers: http://www.epa.gov/region02/water/aquifer/
- FEMA Coastal Barrier Resource System – New York: https://www.fema.gov/national-floodinsuranceprogram/coastal-barrier-resource-system-new-york
- FEMA Floodplain Map Service Center: https://msc.fema.gov/portal
- Military and Civilian Airports: https://www.michigan.gov/documents/mshda/mshda_cd_nsp2_air_accident_315724_7.pdf
- NYRCR –Baldwin NY Rising Community Reconstruction Plan https://stormrecovery.ny.gov/sites/default/files/crp/community/documents/baldwin_nyrcr_plan.pdf
- National Park Service – New York Segments: http://www.nps.gov/ncrc/programs/rtca/nri/states/ny.html
- New York State Department of Agriculture and Markets:

http://www.agriculture.ny.gov/ap/agservices/agricultural-districts.html

- New York State Department of Environmental Conservation (NYSDEC), Coastal Management: http://www.dec.ny.gov/lands/86541.html
- NYSDEC Environmental Resource Mapper: http://www.dec.ny.gov/animals/38801.html
- NYSDEC Wild, Scenic and Recreational Rivers: http://www.dec.ny.gov/permits/32739.html
- NYSDEC Potential Environmental Justice Areas in Nassau County: http://www.dec.ny.gov/docs/permits_ej_operations_pdf/nassauej.pdf
- New York State Department of State (NYSDOS) – Coastal Boundary Map: http://www.dos.ny.gov/opd/atlas/ and http://appext20.dos.ny.gov/coastal_map_public/map.aspx
- NYSDOS – Local Waterfront Revitalization Program – Coastal Waterbodies and Inland Waterways. http://www.dos.ny.gov/opd/programs/pdfs/Waterways_List_08-14.pdf
- State Register of Historic Places – Cultural Resources Information Systems (CRIS): http://parks.ny.gov/shpo/online-tools/
- United States Fish and Wildlife Service (USFWS) IPaC, accessed March 19, 2015. http://ecos.fws.gov/ipac/
- USFWS Coastal Barrier Resources Act http://www.fws.gov/cbra/Maps/index.html
- USFWS Wetlands Online Mapper – National Wetlands Inventory Map: http://www.fws.gov/wetlands/Data/Mapper.html
- Wild and Scenic Rivers Act – Sections 3 and 5 (16 USC 1274 and 1276): http://www.rivers.gov/rivers/delaware-upper.php http://www.rivers.gov/maps/conus.php

List of Permits Obtained or Required:

- US Army Corps of Engineers (USACE) Nationwide Permit
- NYSDEC Freshwater Wetlands Permit
- Village of Hempstead Building Permit
- NYSDEC Storm Water Pollution Prevention Plan (SWPPP)
- NYSDEC Dewatering Permit
- NCDH/VOH Water District Backflow Prevention Device
- Nassau County Fire Marshall
- NYSOPRHP Easement
- NYSDOT MPT
- NYSDEC Long Island Well Permit

Public Outreach [24 CFR 50.23 & 58.43]**:**

- NY Rising Community Reconstruction Program: Baldwin and Baldwin Harbor Public Engagement Meetings held:
    - October 22, 2013
    - November 14, 2013
    - February 27, 2014
- Type I Negative Declaration published in Environmental News Bulletin January 7, 2015 http://www.dec.ny.gov/enb/20150107_not1.html

- Early Notice and Public Explanation of a Proposed Activity in a 100-Year Floodplain published in Newsday – Nassau Edition March 23, 2015.
- Final Notice and Public Explanation of a Proposed Activity in a 100-Year Floodplain published in Hempstead Beacon April 17, 2015.
- Notice giving the public the opportunity to comment on the proposed project prior to submittal of the Final Application to GOSR will be published in the local newspapers and posted to the NCDPW website once Pre-Application is finalized.

Cumulative Impact Analysis [24 CFR 58.32]**:**
In accordance with NEPA, this EA considers the overall cumulative impact of the proposed project and other actions that are related in terms of time or proximity. According to the Council of Environmental Quality (CEQ) regulations, cumulative impacts represent the "impact on the environment which results from the incremental impacts of the action when added to other past, present, and reasonably foreseeable future actions, regardless of what agency (Federal or non-Federal) or person undertakes such other actions. Cumulative impacts can result from individually minor but collectively significant actions taking place over a period of time" (40 CFR 1508.7).

This section examines the proposed project as well as other actions occurring or proposed in the vicinity of the proposed project. The combined effects of these actions are evaluated to determine if they could result in any cumulative impacts. The Village of Hempstead has undertaken a number a planning initiatives that address the existing capacity and reliability of the sanitary sewer system, the cumulative impacts of which are described below.

As described in the Existing Conditions section above, the Village of Hempstead adopted Downtown Overlay zoning amendments in 2012. Prior to these amendments, the Village pursued an update to its comprehensive plan, entitled, *Downtown Vision & Comprehensive Development Plan Update for the Village of Hempstead, Nassau County.* According to the *Draft Generic Environmental Impact Statement, Village Of Hempstead, Nassau County, NY, Downtown Vision & Comprehensive Development Plan Update, September 2008* ("DGEIS"), numerous sections of the Village of Hempstead sewer system are subject to problems due to clogging, breakage, inflow, infiltration and insufficient capacity, especially during periods of heavy rainfall. The May 2012, *Draft Supplemental Generic EIS Downtown Overlay Zone and Zoning Map Amendments* ("DSGEIS") included a theoretical build-out analysis of the Village of Hempstead downtown area under the proposed mixed-use zoning. The DSGEIS analysis of the "worst-case scenario" estimated the total anticipated sewage flow and domestic water usage to be 1.109 MGD. All sanitary wastewater generated by the build-out of the downtown area would be conveyed to the Village sewer system and treated by Nassau County Sewage Disposal District No. 2, Trunk No. 3. The DSGEIS also noted that the Downtown Overlay zoning amendments are intended to reduce water usage, stormwater runoff and wastewater generation, by utilization of incentive-based "green development" options. The DSGEIS wastewater generation estimates did not account for reductions in water use and wastewater generation from incentive-based use of "green development" options such as grey-water separation, treatment and reuse, use of low-flow showers and toilet tanks and rainwater recycling that are provided in the Downtown Overlay zoning amendments.

Under the proposed project, up to 5.85 million gallons per day of wastewater flow would be redirected upstream of Baldwin to the Nassau County Sewer Collection District No. 3 in North Merrick and ultimately treated and discharged from Cedar Creek WPCP. The Project is intended to correct and mitigate sewer system overflows from the County's Baldwin sewage collection system. Key components

of the Project include the design and construction of a new force main piping system to divert flow from the existing Newman Court Pumping Station to the new Hempstead Wastewater Pumping Station and, construction of the new Hempstead Wastewater Pumping Station that would ultimately divert approximately half of the existing sewage flows from the Village of Hempstead to the County's existing Cedar Creek WPCP providing hydraulic and capacity relief in the main interceptor serving the Baldwin sewage collection area. The new force main piping system from Newman's Court would be sized to accommodate the capacity of the existing pumping units and the new Hempstead Wastewater Pumping Station would be sized to handle a peak flow of approximately 12 million gallons per day (MGD) (including Newman's Court flows) and would accommodate the additional flow from the future downtown redevelopment of the Village of Hempstead.

While the proposed project would accommodate the anticipated build-out of the Village of Hempstead downtown, it is not anticipated to facilitate its development. The proposed project is intended to correct an existing sanitary sewer overflow problem. As stated in the DSGEIS, at such time that individual development projects move forward, these projects would be responsible for the implementation of "green development" techniques to avoid or mitigate impacts to the existing sanitary sewer system. In addition, the SEQRA Findings requires that to ensure adequate sewer infrastructure, the Village will study existing facilities, and will establish a fair share infrastructure mitigation program.

Therefore, the proposed project is not anticipated to result in any cumulative impacts, including potential cumulative impacts related to induced development or growth such as increases in impervious surfaces or sanitary sewage generation rates. Overall, the proposed action and build-out of the Village of Hempstead downtown are anticipated to have a positive effect on infrastructure capacity and reliability, reducing the amount of inflow and infiltration into the sanitary sewer system, and reducing the potential for future sanitary sewer overflow events.

Alternatives [24 CFR 58.40(e); 40 CFR 1508.9]

Alternative Force Main Routings

Under the proposed alternative, there is a recommended route for the force main required to convey the additional wastewater flow. The following three (3) alternative routes were considered for the force main piping from the Flow Diversion Pumping Station:

- Route 1: Force main would leave the new Flow Diversion Pumping Station onto Front Street (Route 102). Once on Front Street, it would run approximately 13,000 linear feet east to Merrick Avenue, where it would terminate at a gravity sewer interceptor that runs south with the discharge of wastewater at the Cedar Creek Sewage Treatment Plant (STP) for proper treatment. Crossing the Meadowbrook Parkway will require a horizontal directional drill (HDD) or pipe jack of the force main pipe underneath the parkway.
- Route 2: Force main would leave the new Flow Diversion Pumping Station and head southwest on Peninsula Boulevard and then south onto Henry Street to Jerusalem Avenue. The force man would continue east on Jerusalem Avenue and cross under the Meadowbrook Parkway to a manhole located on the eastern side with discharge to an existing 84-inch diameter gravity sewer interceptor to convey the wastewater to the Cedar Creek STP for proper treatment. Crossing the Meadowbrook Parkway will require a horizontal directional drill (HDD) or pipe jack of the force main pipe underneath the parkway.
- Route 3: In this alternative, the force main would leave the new Flow Diversion Pumping Station and head east along Front Street (Route 102) to the intersection of Ingraham Boulevard. The force main would turn south onto Ingraham Boulevard to Jerusalem Avenue and then east on Jerusalem

Avenue and cross under the Meadowbrook Parkway to a manhole located on the eastern side with discharge to an existing 84-inch diameter gravity sewer interceptor to convey the wastewater to the Cedar Creek STP for proper treatment. As identified in the Route 2 alternative, crossing the Meadowbrook Parkway will require a horizontal directional drill (HDD) or pipe jack of the force main pipe beneath the parkway.

Route 1 was eliminated because the interceptor located at Front Street and Merrick Avenue is a smaller diameter than the interceptor located at Jerusalem Avenue and Meadowbrook Parkway (terminus of Routes 2 and 3). As a result, Route 1 would not achieve as great a capacity improvement as the other routes. Route 2 was eliminated due to the additional impacts to traffic and utilities associated with force main installation along Henry Street as compared to Ingraham Boulevard. Route 3 was selected as the recommended route for the force main piping. All alternative routes would also require work in the floodplain.

Parsonage Creek Siphon

The Parsonage Creek Siphon, which conveys wastewater flow under Parsonage Creek in Baldwin, was identified as a point of capacity constriction within the local sewer collection system. The limited hydraulic performance of the siphon may be due to deposits of materials within the siphon and could potentially be improved by regular maintenance and flushing. Work is proposed under a separate project to remedy the hydraulic limitations at the Parsonage Creek Siphon. Though this will likely alleviate one point of hydraulic constriction within the sewer collection system, there are identified capacity deficiencies in the Oceanside sewer collection system, immediately downstream of the Parsonage Creek Siphon. Any increase in flow facilitated by improvements to the siphon would only accelerate surcharging in the Oceanside system, which would in turn slow flow through the siphon and subsequently result in surcharging and SSOs upstream at Barnes Avenue. This alternative would also require work within the floodplain.

Peak Flow Pump Station

A peak flow pump station, which would receive flow only during high flow events, was evaluated. The pump station would transfer flow from Barnes Avenue beneath Parsonage Creek to Oceanside, just downstream in the sewer system, alleviating the hydraulic constriction observed at Parsonage Creek. This alternative would not eliminate SSO events at Barnes Avenue, as the Oceanside sewer system would also be surcharged during any event in which the peak flow pump station is activated. Surcharging downstream would slow flow through the Parsonage Creek Siphon and continue to result in SSOs in the Barnes Avenue area. This alternative would also require work within the floodplain.

Parallel Gravity Line

In an effort to alleviate the observed capacity limitations in the Oceanside sewer system, an alternative including a parallel gravity line downstream of the Parsonage Creek Siphon was considered. The parallel line would be installed adjacent to an existing interceptor underneath Brower Avenue in Oceanside. Just as in the peak flow pump station alternative, this alternative serves to shift the location of surcharging downstream by improving capacity within a limited reach of the sewer system. Downstream surcharging would still occur and would ultimately translate to surcharging upstream as well. This alternative would not eliminate SSO events at Barnes Avenue. This alternative would also require work within the floodplain.

Storage

As capacity in the sewer system is limited only during peak flow events, one possible alternative is to store flow during peak events until system flow has subsided and the stored volume can be safely conveyed by the sewer system. Such an alternative would require a pumping station to transfer flow from the sewer lines into large storage tanks and chambers. A potential site was identified for location of a storage facility, but the amount of storage required for even a short period of time (one hour) is significant. Given the shallow depth to groundwater in the area and the large storage volume required, construction and operational costs were determined to be prohibitive, particularly considering the limited benefit received. This alternative would also require work within the floodplain.

Pump Station at Barnes Avenue

This alternative would construct a pump station in the Barnes Avenue area to connect residences to the sewer collection system, which, unlike the existing gravity connections, would prevent backflow into homes. Though residential backflow is a concern, the primary means of SSO events on Barnes Avenue is through overland flow of wastewater from external components of the sewer system, such as surcharged manholes. A review of local documentation and historical records indicates that there have been no known occurrences of backflow into residences. This alternative would not reduce the flow within the collection system or the potential for SSOs in the Barnes Avenue area. This alternative would also require work within the floodplain.

Removal of Manhole at Barnes Avenue

The manhole on Barnes Avenue and Third Place has been observed to be a common point of discharge during past SSO events. Under this alternative, the manhole would be removed and replaced with a section of pipe between the existing pipe segments. Though this would potentially reduce the occurrence of SSOs at Barnes Avenue, it would not address any of the causes of SSO events and would likely shift the point of SSO occurrence to another location. This alternative would also require work within the floodplain.

No Action Alternative [24 CFR 58.40(e)]:

A No Action alternative is not proposed as it does not adequately achieve the goal of promoting a safe and healthy living environment for residents of the Barnes Avenue area. Under the No Action alternative, the identified conveyance and treatment capacity constraints within the sewer system would not be addressed. SSO events would continue to occur in the Barnes Avenue area and the sewer system would continue to be vulnerable in future storm events. The No Action alternative would result in continued negative environmental and health impacts in the area.

Summary of Findings and Conclusions:

The proposed project would involve construction of 1,024 square feet of above-ground pumping station facilities and approximately 17,890 linear feet of below-ground force main piping. All project activities would be conducted on previously disturbed areas. The project would include pipe jacking under the Meadowbrook State Parkway and construction of a 1,665 gallon underground diesel storage tank, but neither are anticipated to cause impacts to the Nassau-Suffolk Sole Source Aquifer system or to nearby wetland and floodplain areas. No adverse environmental impacts are anticipated.

Mitigation Measures and Conditions [40 CFR 1505.2(c)]

Summarize below all mitigation measures adopted by the Responsible Entity to reduce, avoid, or eliminate adverse environmental impacts and to avoid non-compliance or non-conformance with the above-listed authorities and factors. These measures/conditions must be incorporated into project contracts, development agreements, and other relevant documents. The staff responsible for implementing and monitoring mitigation measures should be clearly identified in the mitigation plan.

Law, Authority, or Factor	Mitigation Measure
Clean Air Clean Air Act, as amended, particularly section 176(c) & (d); 40 CFR Parts 6, 51, 93	To demonstrate compliance, the following specifications will be incorporated into the contract documents and a more detailed conformity analysis will be required to be completed for the bid package using the "General Conformity Worksheet" (see Appendix B)**.** - *Idling Restriction*. In addition to adhering to the local law restricting unnecessary idling on roadways, on-site vehicle idle time will also be restricted to five minutes for all equipment and vehicles that are not using their engines to operate a loading, unloading, or processing device (e.g., concrete mixing trucks) or otherwise required for the proper operation of the engine. - *Utilization of Newer Equipment.* EPA's Tier 1 through 4 standards for nonroad engines regulates the emission of criteria pollutants from new engines, including PM, CO, NOx, and hydrocarbons (HC). All nonroad construction equipment with a power rating of 50 hp or greater would meet at least the Tier 2 emissions standard to the extent practicable. - *Best Available Tailpipe Reduction Technologies.* Non-road diesel engines with a power rating of 50 horsepower (hp) or greater and controlled truck fleets (i.e., truck fleets under long-term contract with the project) including but not limited to concrete mixing and pumping trucks would utilize the best available tailpipe (BAT) technology for reducing DPM emissions. Diesel particulate filters (DPFs) have been identified as being the tailpipe technology currently proven to have the highest reduction capability. Construction contracts would specify that all diesel nonroad engines rated at 50 hp or greater would utilize DPFs, either installed by the original equipment manufacturer (OEM) or retrofitted. Retrofitted DPFs must be verified by EPA or the California Air Resources Board (CARB). Active DPFs or other technologies proven to achieve an equivalent reduction may also be used.
Endangered Species Endangered Species Act of 1973, particularly section 7; 50 CFR Part 402	The USFWS Information, Planning and Conservation (IPaC) online planning tool Trust Resource List generated for the proposed project includes the northern long-eared bat (*Myotis septentrionalis*) as a threatened species within an area adjacent to the project which may require clearing of vegetation. The limited amount of tree clearing that would occur for the proposed project would only occur during the October 1 to March 31 tree clearing

	window to minimize adverse effects to northern long-eared bat in order to minimize habitat loss. A consultation letter was sent to USFWS on April 2, 2015 for concurrence (see correspondence in Appendix A).
Floodplain Management Executive Order 11988, particularly section 2(a); 24 CFR Part 55	Based on a review of the Federal Emergency Management Agency (FEMA) Flood Insurance Rate Map (FIRM), a portion of the project that passes under the Meadowbrook State Parkway is located within a Special Flood Hazard Area in the 100-year floodplain. Only subsurface force main piping will be located within the flood zone and would not adversely affect the floodplain. A Floodplain Management Plan was developed (see Appendix B).
Sole Source Aquifers Safe Drinking Water Act of 1974, as amended, particularly section 1424(e); 40 CFR Part 149	The proposed project is located on the Nassau-Suffolk Sole Source Aquifer system. An Initial Screen/Preliminary Review was submitted to the EPA on April 13, 2015 as per the Memorandum of Understanding (MOU) between EPA and HUD dated August 24, 1990. Comments from the EPA were received on May 15, 2015, a response was submitted on May 20, 2015, and EPA's approval was received on May 20, 2015 (see correspondence in Appendix A). Two dry wells will be installed at a depth of 8 feet, greater than 3 feet above the water table. In addition, the dry wells will incorporate leaching rings. The 1,665 gallon diesel underground storage tank will be equipped with secondary containment, leak detectors, an overflow alarm and corrosion protection. The project must comply with all local groundwater protection and withdrawal provisions. No impacts to the Sole Source Aquifer are anticipated.
Contamination and Toxic Substances 24 CFR Part 50.3(i) & 58.5(i)(2)	To ensure no adverse effects to human health and the environment, the subsurface disturbance associated with the proposed project will be conducted in accordance with a site-specific Soil Mitigation Plan (SMP). The SMP would specify procedures for identifying and managing any suspected or unforeseen contaminated soil and/or underground storage tanks (including procedures for stockpiling and off-site transportation and disposal), environmental regulatory agency notification and/or reporting, and appropriate health and safety procedures, including the need for dust suppression.
Permit Requirements	All permit conditions listed above or otherwise required for activities under the proposed project must be adhered to.

Determination:

☒ **Finding of No Significant Impact** [24 CFR 58.40(g)(1); 40 CFR 1508.27]
The project will not result in a significant impact on the quality of the human environment.

☐ **Finding of Significant Impact** [24 CFR 58.40(g)(2); 40 CFR 1508.27]
The project may significantly affect the quality of the human environment.

Preparer Signature: Jennifer M. Franco Date: 5/22/15

Name/Title/Organization: Jennifer M. Franco, PE, Senior Technical Director, AKRF, Inc.

Certifying Officer Signature: Thomas J. King Date: 5/22/15

Name/Title: Thomas J. King, Assistant General Counsel and Certifying Officer

This original, signed document and related supporting material must be retained on file by the Responsible Entity in an Environmental Review Record (ERR) for the activity/project (ref: 24 CFR Part 58.38) and in accordance with recordkeeping requirements for the HUD program(s).

3/19/2015

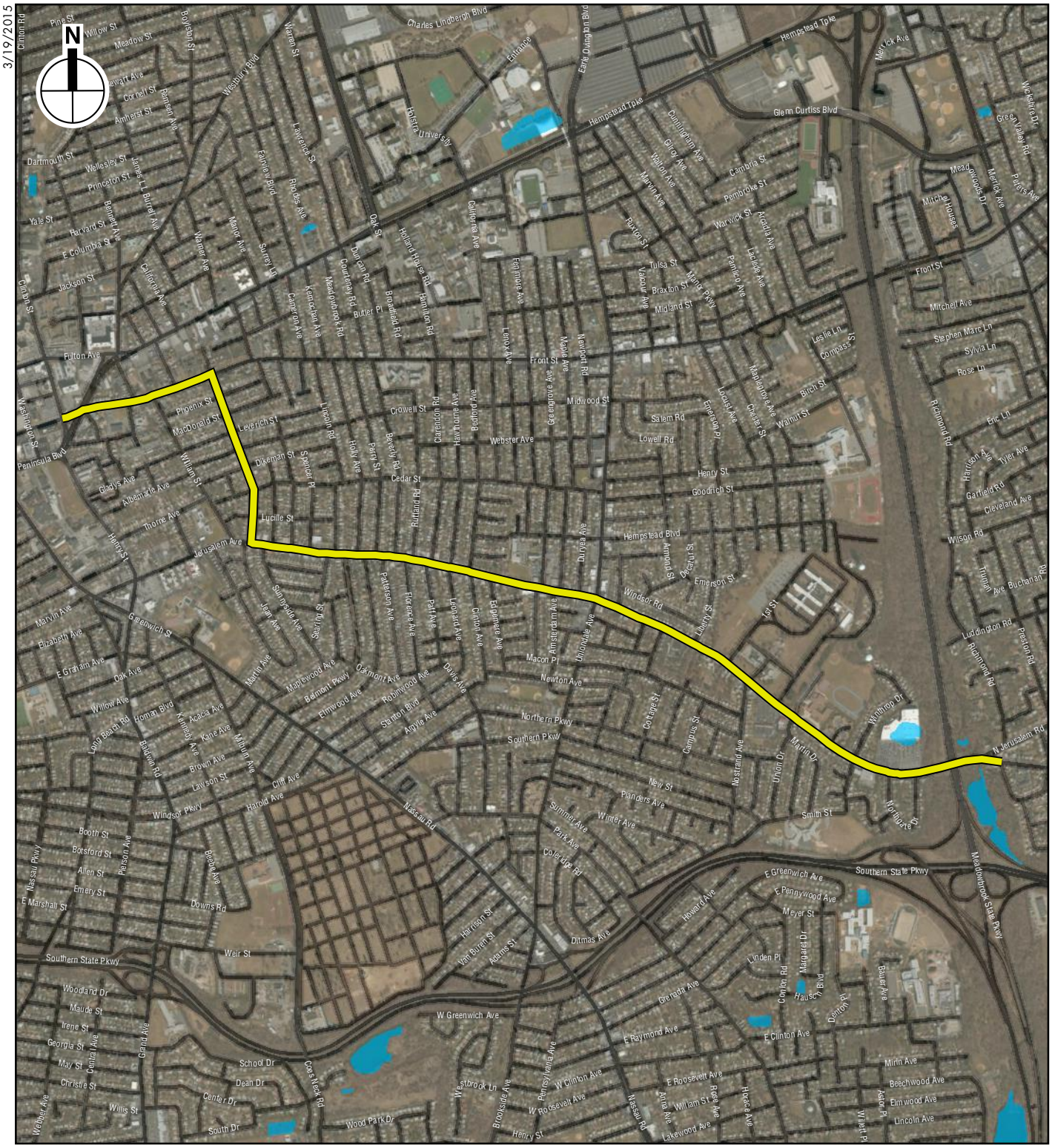

Project Site

0 1 Miles

Location Road Map
Figure 1

Barnes Avenue

3/19/2015

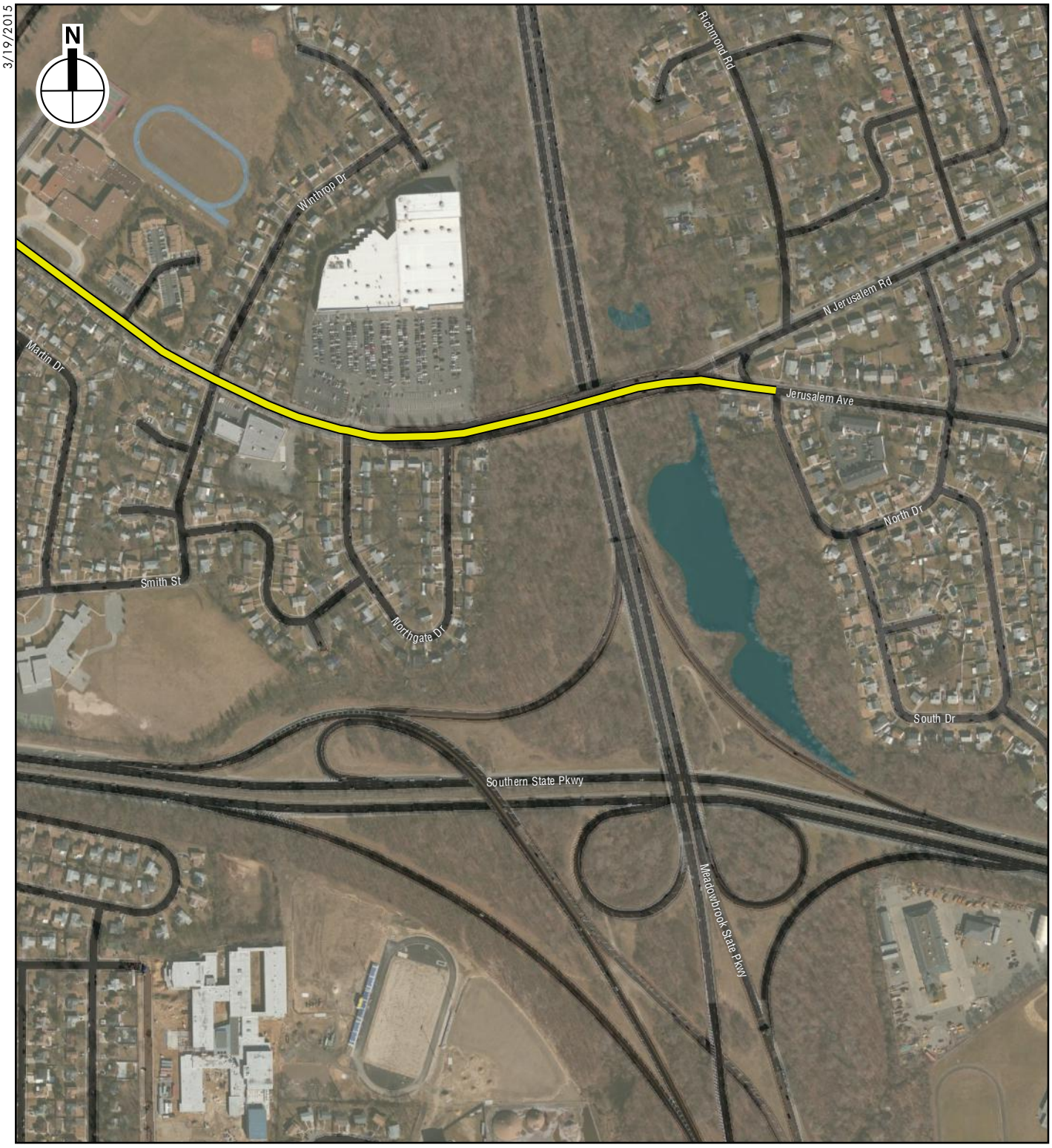

Project Site

0 1,000 Feet

Detailed Location Map
Meadowbrook State Parkway Crossing
Figure 2

Barnes Avenue

Project Site

100-Year Flood Zone

0 1 Miles

FEMA Floodplain
Figure 3

Barnes Avenue

Appendix A – Agency Correspondence

New York State Office of Parks, Recreation and Historic Preservation (NYSOPRHP)

Andrew M. Cuomo
Governor

Rose Harvey
Commissioner

New York State Office of Parks, Recreation and Historic Preservation

Division for Historic Preservation
Peebles Island, PO Box 189, Waterford, New York 12188-0189
518-237-8643
www.nysparks.com

January 30, 2015

Joseph Davenport, Chief Sanitary Engineer
3340 Merrick Rd., Building R, 3rd Floor
Wantagh, NY 11793

Re: Nassau County Dept. Public Works
NCDPW Capital Project No. 3P311-09C/ CE 2415A-02
Governor's Office of Storm Recovery (GOSR), Storm Mitigation Loan Program (SMLP),
NYS Environmental Facilities Corp (EFC)
Weekes Park: Front St, Peninsula Blvd, Clinton St; Hempstead/ Nassau County
14PR04885

Dear Mr. Davenport:

Thank you for requesting the comments of the New York State Historic Preservation Office (SHPO). We have reviewed the submitted materials in accordance with Section 106 of the National Historic Preservation Act of 1966. These comments are those of the SHPO and relate only to Historic/Cultural resources. They do not include other environmental impacts to New York State Parkland that may be involved in or near your project. Such impacts must be considered as part of the environmental review of the project pursuant to the National Environmental Policy Act and/or the State Environmental Quality Review Act (New York Environmental Conservation Law Article 8).

Based on this review, the SHPO has determined that the proposed undertaking will have <u>No Adverse Effect to Historic Properties</u> in or eligible for inclusion in the State or National Register of Historic Places.

If further correspondence is required regarding this project, please refer to the SHPO Project Review (PR) number noted above. If I can be of further assistance, please contact me at (518) 268-2187.

Sincerely,

L Moss

Larry K Moss
Historic Preservation Technical Specialist

CC: Gary Kersic

U.S. Fish and Wildlife Service
(USFWS)

April 2, 2015

Patricia Cole
Deputy Field Supervisor
New York Field Office
U.S. Fish and Wildlife Service
3817 Luker Road
Cortland, NY 13045

Re: Informal Section 7 Consultation for the Nassau County Barnes Avenue Sanitary Sewer Overflow (SSO) Correction Project

Dear Ms. Cole:

The Governor's Office of Storm Recovery (GOSR), acting under the auspices of New York State Homes and Community Renewal's (HCR) Housing Trust Fund Corporation (HTFC), on behalf of the Department of Housing & Urban Development (HUD) is currently preparing an Environmental Assessment (EA) for the Nassau County Department of Public Works Barnes Avenue Sanitary Sewer Overflow (SSO) Correction Project (the "Proposed Action") (see **Figures 1 through 3**). GOSR is acting as HUD's non-federal representative for the purposes of conducting consultation pursuant to Section 7 of the Endangered Species Act.

The purpose of this letter is to provide the U.S. Fish and Wildlife Service – New York Field Office (USFWS) notice of the Proposed Action and to initiate informal consultation with USFWS under Section 7 of the Endangered Species Act (ESA) to determine whether any federally threatened, endangered, candidate, or proposed species, or their designated critical habitats could be affected. The majority of the Proposed Action—installation of new pump station and force main to repair damage to the sewer system sustained during Hurricane Sandy—would occur within existing road rights-of-way and currently developed areas and would have no potential to affect federally-protected species. The eastern terminus of the force main west and east of Meadowbrook State Parkway would require tree clearing within a 12-foot- wide right-of-way for approximately 250 linear feet west of Meadowbrook State Parkway and 400 linear feet east of Meadowbrook State Parkway (see **Figure 3**) for installation of the force main and for the jacking pits needed to jack the force main under Meadowbrook Parkway and East Meadow Brook.

The USFWS Information, Planning and Conservation (IPaC) online planning tool Trust Resource List generated for the proposed project (see **Attachment 1)** lists the following Federally-listed species as having the potential to occur within the vicinity of the portion of the Proposed Actions where vegetation clearing will occur adjacent to Meadowbrook State Parkway: piping plover (*Charadrius melodus*) -

threatened, roseate tern (*Sterna gougallii*) - endangered, rufa red knot (*Calidris canutus rufa*) – threatened, northern long-eared bat (*Myotis septentrionalis*) - proposed for listing, sandplain gerardia (*Agalinis acuta*) - endangered, and seabeach amaranth (*Amaranthus pumilus*) - threatened. This correspondence represents the GOSR's assessment of effects in compliance with section 7 of the ESA of 1973, as amended, with respect to the Proposed Action.

No habitat for piping plover, roseate tern, rufa red knot, sandplain gerardia and seabeach amaranth is present within the portion of the proposed force main route adjacent to Meadowbrook State Parkway, or the remaining portion of the force main alignment and pump station location and these species are not expected to occur within the project site. Therefore, the Proposed Action has no or little potential for effect to these species or the habitats on which these species depend.

The northern long-eared bat, proposed for listing as federally endangered, is a temperate, insectivorous bat whose life cycle can be coarsely divided into two primary phases - reproduction and hibernation. Northern long-eared bats hibernate in caves or mines during winter and then emerge in early spring, with males dispersing and remaining solitary until mating season at the end of the summer, and pregnant females forming maternity colonies in which to rear young. No caves or mines occur near the project site. Summer habitat of the northern long-eared bat generally includes upland and riparian forest within heavily forested landscapes (Ford et al. 2005, Henderson et al. 2008). The long-eared bat is sensitive to fragmentation and urbanization, and requires interior forest for both foraging and breeding (Foster and Kurta 1999, Broders et al. 2006, Henderson et al. 2008). Roost trees are usually in intact forest, close to the core and away from large clearings, roads, or other sharp edges (Menzel et al. 2002, Owen et al. 2003, Carter and Feldhammer 2005). The woodland habitat present within the force main route adjacent to the Meadowbrook State Parkway is bounded by an urbanized landscape and broken up by roadways, limiting the potential for northern long-eared bat to occur within these woodlands. The limited amount of tree clearing that would occur for the Proposed Action would only occur during the October 1 to March 31 tree clearing window to minimize adverse effects to northern long-eared bat, would result in minimal habitat loss, and would not result in fragmentation of a contiguous woodland area. For these reasons, the Proposed Action may affect but is unlikely to adversely affect the northern long-eared bat or the habitat on which this species depends.

Compliance

For purposes of consultation under Section 7(a)(2) of the ESA, we conclude that the Proposed Action will have no effect on the piping plover, roseate tern, rufa red knot, sandplain gerardia and seabeach amaranth or the habitats on which these species depend, and may affect but is unlikely to adversely affect northern long-eared bat and the habitats on which this species depends. We request your concurrence with this determination.

If you have questions or require additional information regarding this request, please contact me at (646) 417-4660 or thomas.king@stormrecovery.ny.gov. Thank you for your time and consideration.

Sincerely,

Thomas J. King, Esq.
Certifying Officer, NYS Homes and Community Renewal

Literature Cited

Broders, H.G., G.J. Forbes, S. Woodley, and I.D. Thompson. 2006. Range extent and stand selection for forest-dwelling northern long-eared and little brown bats in New Brunswick. Journal of Wildlife Management 70: 1174-1184.

Carter, T.C., and G.A. Feldhamer. 2005. Roost tree use by maternity colonies of Indiana bats and northern long-eared bats in southern Illinois. Forest Ecology and Management 219:259-268.

Ford, W.M., M.A. Menzel, J.L. Rodrigue, J.M. Menzel, and J.B. Johnson. 2005. Relating bat species presence to simple habitat measures in a central Appalachian forest. Biological Conservation 126: 528-539.

Foster, R.W. and A. Kurta, A. 1999. Roosting ecology of the northern bat (Myotis septentrionalis) and comparisons with the endangered Indiana bat (Myotis sodalis). Journal of Mammalogy 80: 659-672.

Henderson, L.E., L.J. Farrow, and H.G. Broders. 2008. Intra-specific effects of forest loss on the distribution of the forest-dependent northern long-eared bat (Myotis septentrionalis). Biological Conservation 141:1819-1828.

Menzel, M.A., S.F. Owen, W.M. Ford, J.W. Edwards, P.B. Wood, B.R. Chapman, and K.V. Miller. 2002. Roost tree selection by northern long-eared bat (Myotis septentrionalis) maternity colonies in an industrial forest of the central Appalachian mountains. Forest Ecology and Management 155:107-114.

Owen, S.F., M.A. Menzel, W.M. Ford, B.R. Chapman, K.V. Miller, J.W. Edwards, and P.B. Wood. 2003. Home-range size and habitat used by the northern myotis (Myotis septentrionalis). American Midland Naturalist 150:352-359.

U.S. Fish and Wildlife Service

Trust Resources List

This resource list is to be used for planning purposes only — it is not an official species list.

Endangered Species Act species list information for your project is available online and listed below for the following FWS Field Offices:

Long Island Ecological Services Field Office
340 SMITH ROAD
SHIRLEY, NY 11967
(631) 286-0485

Project Name:

Barnes

U.S. Fish and Wildlife Service

Trust Resources List

Project Location Map:

Project Counties:

Nassau, NY

Geographic coordinates (Open Geospatial Consortium Well-Known Text, NAD83):

MULTIPOLYGON (((-73.5765044 40.6948582, -73.5736946 40.6953308, -73.5726431 40.6920932, -73.5763328 40.6919785, -73.5765044 40.6948582)))

Project Type:

Wastewater Pipeline

U.S. Fish and Wildlife Service

Trust Resources List

Endangered Species Act Species List (USFWS Endangered Species Program).

There are a total of **6** threatened or endangered species on your species list. Species on this list should be considered in an effects analysis for your project and could include species that exist in another geographic area. For example, certain fishes may appear on the species list because a project could cause downstream effects on the species. Critical habitats listed under the **Has Critical Habitat** column may or may not lie within your project area. See the **Critical habitats within your project area** section below for critical habitat that lies within your project area. Please contact the designated FWS office if you have questions.

Species that should be considered in an effects analysis for your project:

Birds	Status		Has Critical Habitat	Contact
Piping Plover (*Charadrius melodus*) Population: except Great Lakes watershed	Threatened	species info	Final designated critical habitat Final designated critical habitat	Long Island Ecological Services Field Office
Red Knot (*Calidris canutus rufa*) Population:	Threatened	species info		Long Island Ecological Services Field Office
Roseate tern (*Sterna dougallii dougallii*) Population: northeast U.S. nesting pop.	Endangered	species info		Long Island Ecological Services Field Office
Flowering Plants				
Sandplain gerardia (*Agalinis acuta*)	Endangered	species info		Long Island Ecological Services Field Office
Seabeach amaranth (*Amaranthus pumilus*)	Threatened	species info		Long Island Ecological Services Field Office
Mammals				
northern long-eared Bat (*Myotis septentrionalis*) Population:	Proposed Endangered	species info		Long Island Ecological Services Field Office

Critical habitats within your project area:

U.S. Fish and Wildlife Service

Trust Resources List

There are no critical habitats within your project area.

FWS National Wildlife Refuges (USFWS National Wildlife Refuges Program).

There are no refuges found within the vicinity of your project.

FWS Migratory Birds (USFWS Migratory Bird Program).

The protection of birds is regulated by the Migratory Bird Treaty Act (MBTA) and the Bald and Golden Eagle Protection Act (BGEPA). Any activity, intentional or unintentional, resulting in take of migratory birds, including eagles, is prohibited unless otherwise permitted by the U.S. Fish and Wildlife Service (50 C.F.R. Sec. 10.12 and 16 U.S.C. Sec. 668(a)). The MBTA has no provision for allowing take of migratory birds that may be unintentionally killed or injured by otherwise lawful activities. For more information regarding these Acts see: http://www.fws.gov/migratorybirds/RegulationsandPolicies.html.

All project proponents are responsible for complying with the appropriate regulations protecting birds when planning and developing a project. To meet these conservation obligations, proponents should identify potential or existing project-related impacts to migratory birds and their habitat and develop and implement conservation measures that avoid, minimize, or compensate for these impacts. The Service's Birds of Conservation Concern (2008) report identifies species, subspecies, and populations of all migratory nongame birds that, without additional conservation actions, are likely to become listed under the Endangered Species Act as amended (16 U.S.C 1531 et seq.).

For information about Birds of Conservation Concern, go to:
http://www.fws.gov/migratorybirds/CurrentBirdIssues/Management/BCC.html.

To search and view summaries of year-round bird occurrence data within your project area, go to the Avian Knowledge Network Histogram Tool links in the Bird Conservation Tools section at: http://www.fws.gov/migratorybirds/CCMB2.htm.

For information about conservation measures that help avoid or minimize impacts to birds, please visit:
http://www.fws.gov/migratorybirds/CCMB2.htm.

Migratory birds of concern that may be affected by your project:
There are **25** birds on your Migratory birds of concern list. The underlying data layers used to generate the migratory bird list of concern will continue to be updated regularly as new and better information is obtained. User feedback is one method of identifying any needed improvements. Therefore, users are encouraged to submit comments about any questions regarding species ranges (e.g., a bird on the USFWS BCC list you know

U.S. Fish and Wildlife Service

Trust Resources List

does not occur in the specified location appears on the list, or a BCC species that you know does occur there is not appearing on the list). Comments should be sent to the ECOS Help Desk.

Species Name	Bird of Conservation Concern (BCC)	Species Profile	Seasonal Occurrence in Project Area
American Oystercatcher (*Haematopus palliatus*)	Yes	species info	Year-round
American bittern (*Botaurus lentiginosus*)	Yes	species info	Breeding
Bald eagle (*Haliaeetus leucocephalus*)	Yes	species info	Year-round
Black Skimmer (*Rynchops niger*)	Yes	species info	Breeding
Black rail (*Laterallus jamaicensis*)	Yes	species info	Breeding
Black-billed Cuckoo (*Coccyzus erythropthalmus*)	Yes	species info	Breeding
Blue-winged Warbler (*Vermivora pinus*)	Yes	species info	Breeding
Canada Warbler (*Wilsonia canadensis*)	Yes	species info	Breeding
Fox Sparrow (*Passerella liaca*)	Yes	species info	Wintering
Gull-billed Tern (*Gelochelidon nilotica*)	Yes	species info	Breeding
Hudsonian Godwit (*Limosa haemastica*)	Yes	species info	Migrating
Least Bittern (*Ixobrychus exilis*)	Yes	species info	Breeding
Least tern (*Sterna antillarum*)	Yes	species info	Breeding
Pied-billed Grebe (*Podilymbus podiceps*)	Yes	species info	Year-round
Prairie Warbler (*Dendroica discolor*)	Yes	species info	Breeding
Purple Sandpiper (*Calidris maritima*)	Yes	species info	Wintering

U.S. Fish and Wildlife Service

Trust Resources List

Red Knot (*Calidris canutus rufa*)	Yes	species info	Wintering
Rusty Blackbird (*Euphagus carolinus*)	Yes	species info	Wintering
Saltmarsh Sparrow (*Ammodramus caudacutus*)	Yes	species info	Breeding
Seaside Sparrow (*Ammodramus maritimus*)	Yes	species info	Year-round
Short-eared Owl (*Asio flammeus*)	Yes	species info	Wintering
Snowy Egret (*Egretta thula*)	Yes	species info	Breeding
Upland Sandpiper (*Bartramia longicauda*)	Yes	species info	Breeding
Wood Thrush (*Hylocichla mustelina*)	Yes	species info	Breeding
Worm eating Warbler (*Helmitheros vermivorum*)	Yes	species info	Breeding

NWI Wetlands (USFWS National Wetlands Inventory).

The U.S. Fish and Wildlife Service is the principal Federal agency that provides information on the extent and status of wetlands in the U.S., via the National Wetlands Inventory Program (NWI). In addition to impacts to wetlands within your immediate project area, wetlands outside of your project area may need to be considered in any evaluation of project impacts, due to the hydrologic nature of wetlands (for example, project activities may affect local hydrology within, and outside of, your immediate project area). It may be helpful to refer to the USFWS National Wetland Inventory website. The designated FWS office can also assist you. Impacts to wetlands and other aquatic habitats from your project may be subject to regulation under Section 404 of the Clean Water Act, or other State/Federal Statutes. Project Proponents should discuss the relationship of these requirements to their project with the Regulatory Program of the appropriate U.S. Army Corps of Engineers District.

Data Limitations, Exclusions and Precautions

The Service's objective of mapping wetlands and deepwater habitats is to produce reconnaissance level information on the location, type and size of these resources. The maps are prepared from the analysis of high altitude imagery. Wetlands are identified based on vegetation, visible hydrology and geography. A margin of

U.S. Fish and Wildlife Service

Trust Resources List

error is inherent in the use of imagery; thus, detailed on-the-ground inspection of any particular site may result in revision of the wetland boundaries or classification established through image analysis.

The accuracy of image interpretation depends on the quality of the imagery, the experience of the image analysts, the amount and quality of the collateral data and the amount of ground truth verification work conducted. Metadata should be consulted to determine the date of the source imagery used and any mapping problems.

Wetlands or other mapped features may have changed since the date of the imagery and/or field work. There may be occasional differences in polygon boundaries or classifications between the information depicted on the map and the actual conditions on site.

Exclusions - Certain wetland habitats are excluded from the National mapping program because of the limitations of aerial imagery as the primary data source used to detect wetlands. These habitats include seagrasses or submerged aquatic vegetation that are found in the intertidal and subtidal zones of estuaries and nearshore coastal waters. Some deepwater reef communities (coral or tuberficid worm reefs) have also been excluded from the inventory. These habitats, because of their depth, go undetected by aerial imagery.

Precautions - Federal, state, and local regulatory agencies with jurisdiction over wetlands may define and describe wetlands in a different manner than that used in this inventory. There is no attempt, in either the design or products of this inventory, to define the limits of proprietary jurisdiction of any Federal, state, or local government or to establish the geographical scope of the regulatory programs of government agencies. Persons intending to engage in activities involving modifications within or adjacent to wetland areas should seek the advice of appropriate federal, state, or local agencies concerning specified agency regulatory programs and proprietary jurisdictions that may affect such activities.

The following wetland types intersect your project area in one or more locations:

Wetland Types	NWI Classification Code	Total Acres
Freshwater Forested/Shrub Wetland	PFO1A	27.2592
Freshwater Pond	PUBH	4.9227

3/30/2015

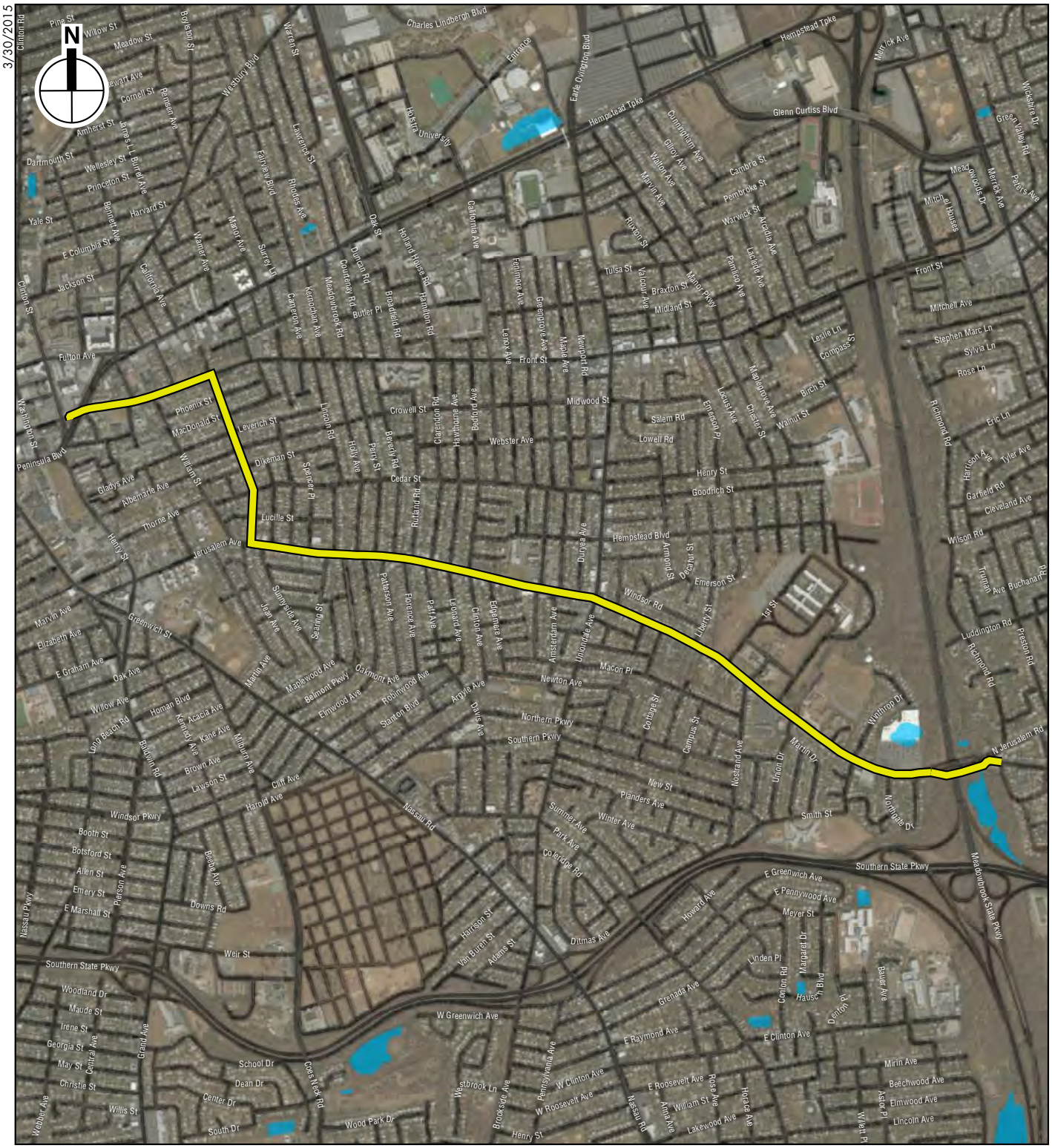

Project Site

0 1 Miles

Barnes Avenue

Project Location
Figure 1

3.31.15

Source: Cameron Engineering & Associates, LLP and H2M architects + engineers

Proposed Force Main Route

Barnes Avenue

Figure 2

3.31.15

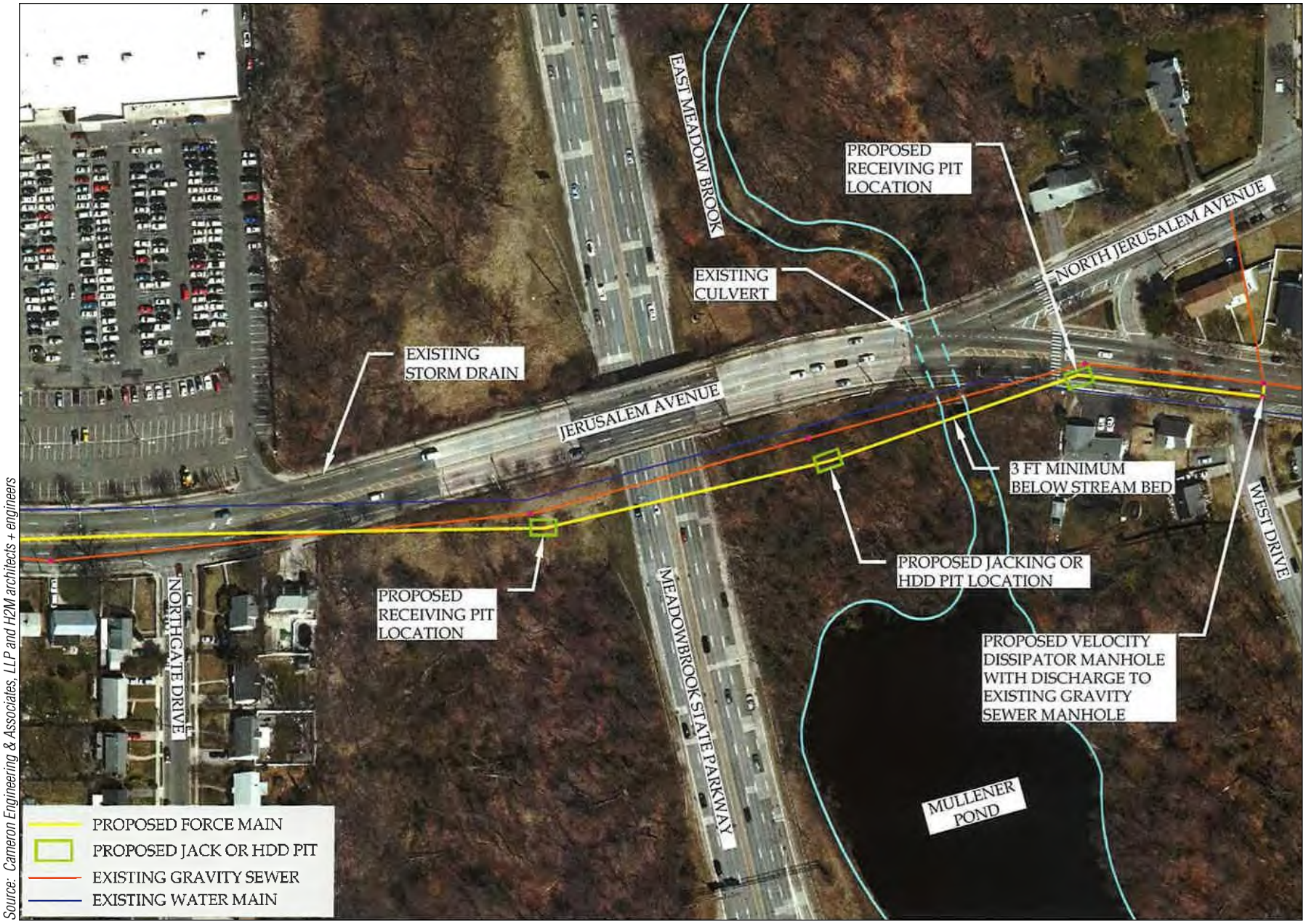

Source: Cameron Engineering & Associates, LLP and H2M architects + engineers

Pipe Jack/HDD Beneath
Meadowbrook Parkway

Barnes Avenue

Figure 3

United States Department of the Interior

FISH AND WILDLIFE SERVICE
Long Island Field Office
340 Smith Road
Shirley, NY 11967
Phone: (631) 286-0485 Fax: (631) 286-4003
http://www.fws.gov/northeast/nyfo

To: Thomas King Date: April 22, 2015

USFWS File No:

Regarding your: ☒ letter ☐ FAX ☐ E-mail dated: April 2, 2015

For project: Nassau Cty Barnes Ave Sanitary Sewer Over Run

Located:

In Town/County: Nassau Cty

Pursuant to the Endangered Species Act of 1973 (ESA) (87 Stat. 884, as amended; 16 U.S.C. 1531 *et seq.*), the U.S. Fish and Wildlife Service:

☒ Acknowledges receipt of your "no effect" determination. No further ESA coordination or consultation is required.
For PIPL, SBA, SGA, ROTE, REKN

☒ Acknowledges receipt of your determination. Please provide copy of your determination and supporting materials to any involved Federal agency for their final ESA determination. - NLTAA For Northern Long-Eared Bat
- FWS Concurs

☐ Is taking no action pursuant to ESA or any other legislation at this time but would like to be kept informed of project developments.

As a reminder, until the proposed project is complete, we recommend that you check our website (http://www.fws.gov/northeast/nyfo/es/section7.htm) every 90 days from the date of this letter to ensure that listed species presence/absence information for the proposed project area is current. Should project plans change or additional information on listed or proposed species or critical habitat become available, this determination may be reconsidered.

Pursuant to the Fish and Wildlife Coordination Act (FWCA) (48 Stat. 401, as amended; 16 U.S.C. 661 *et seq.*),

☐ Requests additional time for review.

☐ Is providing FWCA comments (see attached).

☐ Will provide FWCA comments separately.

☐ Is taking no action pursuant to FWCA due to lack of funding.

☐ Has no objection pursuant to the FWCA.

☐ Is taking no action pursuant to the FWCA at this time but would like to be kept informed of project developments.

USFWS Contact(s): [signature] Date Apr 22, 2015

Supervisor: Date

U.S. Environmental Protection Agency
(USEPA)

April 13, 2015

Ms. Grace Musemeci
Chief, Environmental Impacts Branch
U.S. Environmental Protection Agency
Region II Main Regional Office
290 Broadway, 25th Floor
New York, NY 10007

RE: CDBG-DR Funding Application, Barnes Avenue Sanitary Sewage Flow Diversion Project

Dear Ms. Musemeci:

The New York State Governor's Office of Storm Recovery (GOSR) received a funding application for the Barnes Avenue Sanitary Sewage Flow Diversion Project, located in the Town of Hempstead, Nassau County, New York. The project would include the construction of a wastewater flow diversion pumping station and wastewater force main piping. For additional information please see enclosed submission.

Pursuant to the Disaster Relief Appropriations Act, 2013 (Public Law 113-2) and the Housing and Community Development Act (42 U.S.C. § 5301 et seq.), GOSR is acting under the auspices of New York State Homes and Community Renewal's Housing Trust Fund Corporation as a recipient of Community Development Block Grant – Disaster Recovery ("CDBG-DR") funds from the United States Department of Housing and Urban Development ("HUD") and is the entity responsible for compliance with the HUD NEPA environmental review procedures set forth in 24 C.F.R. Part 58. 24 C.F.R. Part 58 requires GOSR to review projects for conformance with the Safe Drinking Water Act of 1974 (42 U.S.C. 201, 300(f) *et seq.,* and 21 U.S.C. 349) as amended, and Environmental Protection Agency (EPA) regulations pertaining to Sole Source Aquifers found at 40 C.F.R. Part 149.

In accordance with the Memorandum of Understanding ("MOU") between EPA and HUD dated August 24, 1990, GOSR hereby requests an Initial Screen/Preliminary Review for the Barnes Avenue Sanitary Sewage Flow Diversion Project. Please review the attached documentation, including Attachment 2.A and 3 to the MOU.

Responses can be sent to me via email at Thomas.King@stormrecovery.ny.gov. In accordance with the MOU, a non-response within fifteen days shall constitute a favorable review of the project/activity. If you have any questions, please call me at (518) 473-0015.

Sincerely,

Thomas J. King
Assistant General Counsel and Certifying Officer

Enclosures

ATTACHMENT 2.A

NON-HOUSING PROJECT/ACTIVITY INITIAL SCREEN CRITERIA
(For projects in a designated Sole Source Aquifer area)

The following list of criteria questions are to be used as an initial screen to determine which non-housing projects/activities should be forwarded to the Environmental Protection Agency (EPA) for Preliminary Sole Source Aquifer (SSA) Review. (For housing projects/activities see Attachment 2.B) If any of the questions are answered affirmatively, Attachment 3, SSA Preliminary Review Requirements, should also be completed. The application/final statement, this Attachment, Attachment 3, and any other pertinent information should then be forwarded to EPA at the address below.

Any project/activity not meeting the criteria in this Attachment, but suspected of having a potential adverse effect on the Sole Source Aquifer should also be forwarded. Contact EPA if you have any questions.

Chief, Environmental Impacts Branch
USEPA Region II
26 Federal Plaza, Room 500
New York, New York 10278
(212) 264-1840

CRITERIA QUESTIONS	YES NO N/A
1. Is the project/activity located within a currently designated or proposed groundwater sensitive area such as a special Ground Water Protection Area, Critical Supply Area, Wellhead Protection Area, etc.? (This information can be obtained from the County or Regional planning board, the local health department, the State health department, or the State environmental agency.)	NO
2. Is the project/activity located within a one half mile radius (2640 feet) of a current or proposed public water supply well or wellfield? (This information can be obtained from the local health department, the State health department or the State environmental agency.)	YES
3. Will the project/activity include or directly cause: (check appropriate items)	
- construction or expansion of solid waste disposal, recycling or conversion facilities	NO
- construction or expansion or closure of landfills	NO
- construction or expansion of water supply facilities (i.e. treatment plant, pump house, etc.)	NO
- construction or expansion of on-site wastewater treatment plants or sewage trunk lines, greater than 1/4 mile	YES
- construction or expansion of gas or petroleum trunk lines, greater than 1200 feet	NO
- construction or expansion of railroad spurs or similar extensions	NO
- construction or expansion of municipal sewage treatment plants	NO

4. Will the project/activity include storage or handling of any hazardous constituents as listed in Attachment 4, Hazardous Constituents? NO
   If these constituents are used during the construction phase of the project, then an assurance statement must be provided indicating that chemicals will be used in a safe and proper manner and that they will be promptly removed after construction is completed.

5. Will the project/activity include bulk storage of petroleum in underground or above ground tanks in excess of 1100 gallons? YES

6. Will the project/activity require a federal or state discharge elimination permit or modification of an existing permit? NO

This attachment was completed by:

Name:	Thomas King
Title:	Assistant General Counsel and Certifying Officer Governor's Office of Storm Recovery
Address:	99 Washington Avenue Suite 1224 Albany, NY 12231
Telephone number:	(518) 473-0015
Date:	April 13, 2015

ATTACHMENT 3

SSA PRELIMINARY REVIEW INFORMATION REQUIREMENTS

Where currently available, the information in this Attachment should be provided to the Environmental Protection Agency (see address below) along with the application/final statement; Attachment 2.A, Non-Housing Initial Screen Criteria or Attachment 2.B, Housing Initial Screen Criteria; and any other information which may be pertinent to a Sole Source Aquifer review. Where applicable, indicate the source of your information.

Chief, Environmental Impacts Branch
USEPA Region II
26 Federal Plaza, Room 500
New York, New York 10278
(212) 264-1840

I. Project/Activity Location	ENCLOSED YES NO
1. Provide the geographic location and total acreage of the project/activity site. Include a site location map which identifies the site in relation to the surrounding area. (Examples of maps which can be used include: 1:24,000 or 1:25,000 U.S. Geological Survey quadrangle sheet, Hagstroms Street Map)	YES
2. If applicable, identify which groundwater sensitive areas (special Ground Water Protection Area, Critical Supply Area, Wellhead Protection Area, etc.) the project/activity is located in or adjacent to. (This information can be obtained from the County or Regional planning board, the local health department, the State health department, or the State environmental agency.)	N/A Project is not in or adjacent to any of these areas
II. Nature of Project/Activity	
3. Provide a general narrative describing the project/activity including but not limited to: type of facility; type of activities to be conducted; number and type of units; number of residents, etc. Provide the general layout of the project/activity site and a site-plan if available.	YES
III. Public Water Supply	
4. Provide a description of plans to provide water supply.	N/A Project will not use water or create a new demand for water
5. Provide the location of nearby existing or proposed public water supply wells or wellfields within a one half mile radius (2640 feet) of the project/activity. Provide the name of the supplier(s) of those wells or	

wellfields. This information should be available from the local health department, State health department, or the State environmental agency. If private wells are to be used, then information necessary to obtain a well drilling permit should be provided.	YES
IV. Wastewater and Sewage Disposal	
6. Provide a description of plans to handle wastewater and sewage disposal. If the project/activity is to be served by existing public sanitary sewers provide the name of the sewer district.	N/A Project will not generate wastewater
7. Provide a description of plans to handle storm water runoff.	YES
8. Identify the location, design, size, of any on-site recharge basins, dry wells, leaching fields, retention ponds, etc.	YES
V. Use, Storage, Transport of Hazardous or Toxic Materials (Applies only to non-housing projects/activities)	
9. Identify any products listed in Attachment 4, Hazardous Constituents, of the Housing and Urban Development-Environmental Protection Agency Memorandum of Understanding which may be used, stored, transported, or released as a result of the construction activity.	N/A No hazardous constituents to be used
10. Identify the number and capacity of underground storage tanks at the project/activity site. Identify the products and volume to be stored, and the location on the site.	YES
11. Identify the number and capacity of above ground storage tanks at the project/activity site. Identify the products and volume to be stored, and the location on the site.	N/A No above ground storage tanks

Project Description

Sanitary sewer overflows (SSOs) have occurred periodically at Barnes Avenue and Third Avenue in Baldwin for more than a decade. Sanitary sewer overflow is a condition in which untreated wastewater is discharged into the environment and is typically caused by either a surcharge of sewage flow or infiltration of large volumes of stormwater into the sanitary sewer system. According to the NY Rising Community Reconstruction Plan for Baldwin and Baldwin Harbor, Superstorm Sandy exacerbated the existing vulnerabilities in the wastewater collection and treatment system, breaching the sewer main in leading to Bay Park WPCP. Due to the severity of the resulting SSO event, a state of emergency was declared in the Barnes Avenue neighborhood.

The flow diversion project proposed herein addresses the vulnerabilities and capacity limitation in the sewer system by diverting wastewater generated upstream to a portion of the sewer system with adequate capacity for conveyance and treatment. In addition to improving the resiliency of the local sewer system, the project would improve the capacity of the sewer collection system in the Village of Hempstead to a level necessary to sustain potential future development.

The proposed project involves construction, renovation, and other modifications to the sewer system in the Village of Hempstead necessary to improve the capacity of the wastewater collection system and eliminate sanitary sewer overflows in the Barnes Avenue area of Baldwin, located downstream. In order to improve the capacity of the system, a volume of wastewater flow must be diverted to a portion of the system with adequate capacity for conveyance and treatment.

The project proposes construction of a new flow diversion pump station adjacent to the existing Weekes Park Pumping Station, renovation of the Newmans Court Pumping Station, and installation of new force main piping under Front Street/Route 102, Ingraham Boulevard, Jerusalem Avenue, Meadowbrook State Parkway, and South Franklin Street to convey the redirected wastewater flow. In total, 17,890 linear feet of force main piping would be installed through a combination of open cut excavation and pipe jacking. Under the proposed configuration, up to 5.85 million gallons per day of wastewater flow would be redirected upstream of Baldwin to the County's Sewer Collection District No. 3 in North Merrick and ultimately treated and discharged from Cedar Creek WPCP.

The depth to the top of the pipe is approximately 10 feet below ground surface (bgs). Pipe diameters are 18 inches and 24 inches; with the expected depth of the jacking pits approximately 12 feet to 13 feet bgs. Groundwater recovered during dewatering of the jacking pits will be treated and discharged in accordance to NYSDEC requirements. Because dewatering of the jacking pits will only be withdrawing groundwater from the surficial aquifer, it does not have the potential to adversely affect the much deeper aquifer in which the water supply wells are located.

Figure 1 provides a map of the project area. Figure 2 provides a map of the proposed force main routing. Figure 3 provides a site plan for the Flow Diversion Pumping Station at Weekes Park.

Water Supply

Operation of the new force main and pump station will not generate any additional demand for water.

There are six (6) existing public water supply wells within a one half mile radius of the project. All of these wells are in the vicinity of Mitchell Street and St. Agnes Road, north of the project site and west of the Meadowbrook State Parkway.

Stormwater Run-off

Stormwater runoff from the new Weekes Park Flow Diversion Pumping Station site will be directed to a new on-site drywell in accordance with Nassau County Onsite Drainage Requirements, NYSDEC Stormwater Management Standards, and the Village of Hempstead Stormwater Code.

Soil erosion and sediment control measures will be taken during construction to manage runoff from the construction site. Figure 4 provides soil erosion and sediment control plan details and notes.

Drywells

The location and design of the proposed on-site drywells are provided in Figures 5 and 6.

Underground Storage Tanks

As part of the proposed project, there will be one (1) underground storage tank installed at the Weekes Park Flow Diversion Pumping Station. The tank will have a capacity of 1,665 gallons and will hold diesel fuel for the emergency generator. The tank will be a double-walled base tank and will be located below grade in the proposed generator building. Figure 7 provides a site plan showing the location of the generator building and Figure 8 provides plans for the generator building.

3/19/2015

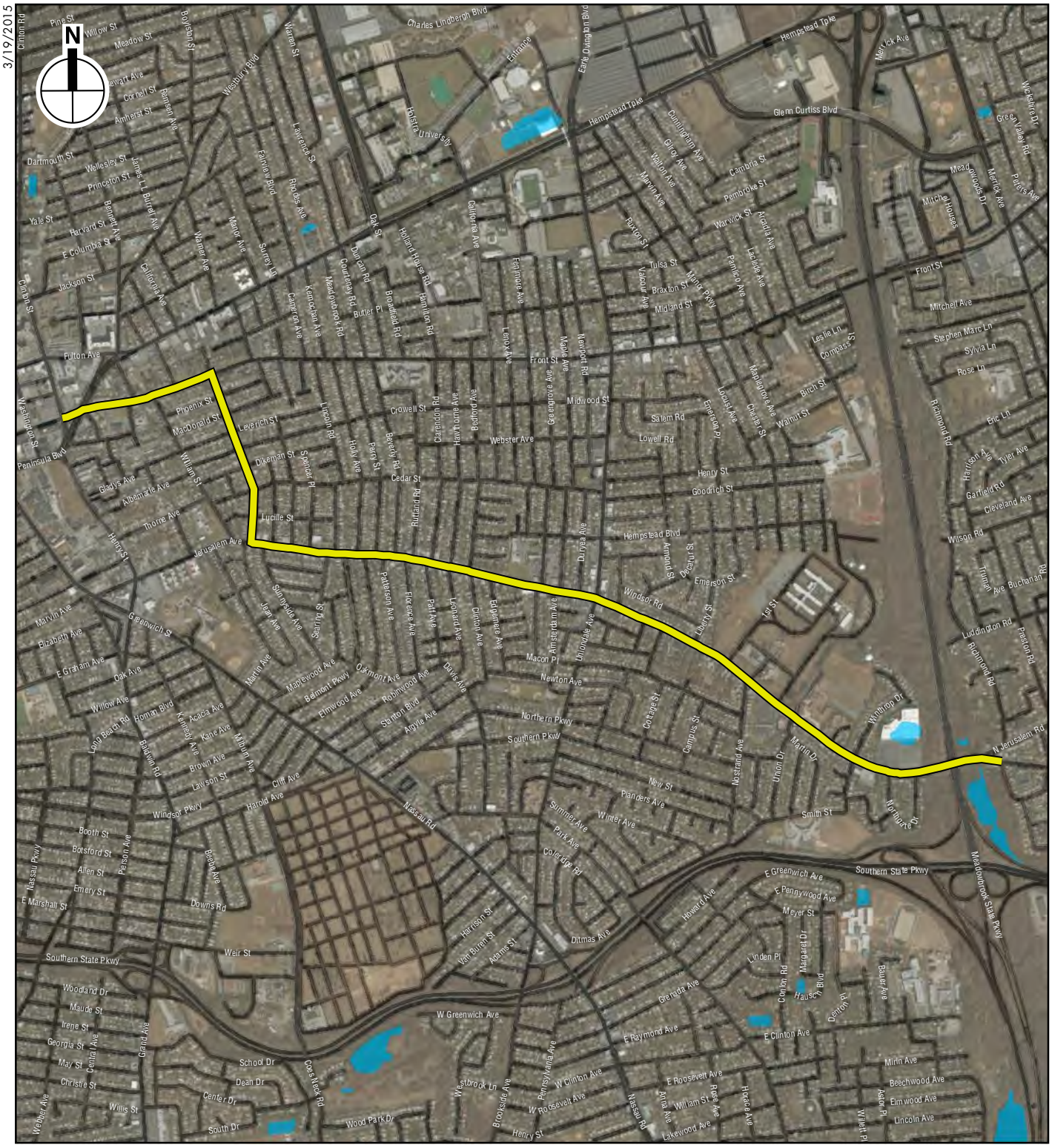

Project Site

0 1 Miles

Total project area:
4.2 acres (Force main route and Weekes Park Flow Diversion Pumping Station Site)

Weekes Park Flow Diversion Pumping Station Site:
0.23 acres (total site area)
0.1 acres (total disturbed area)

Location Road Map

Barnes Avenue

Figure 1

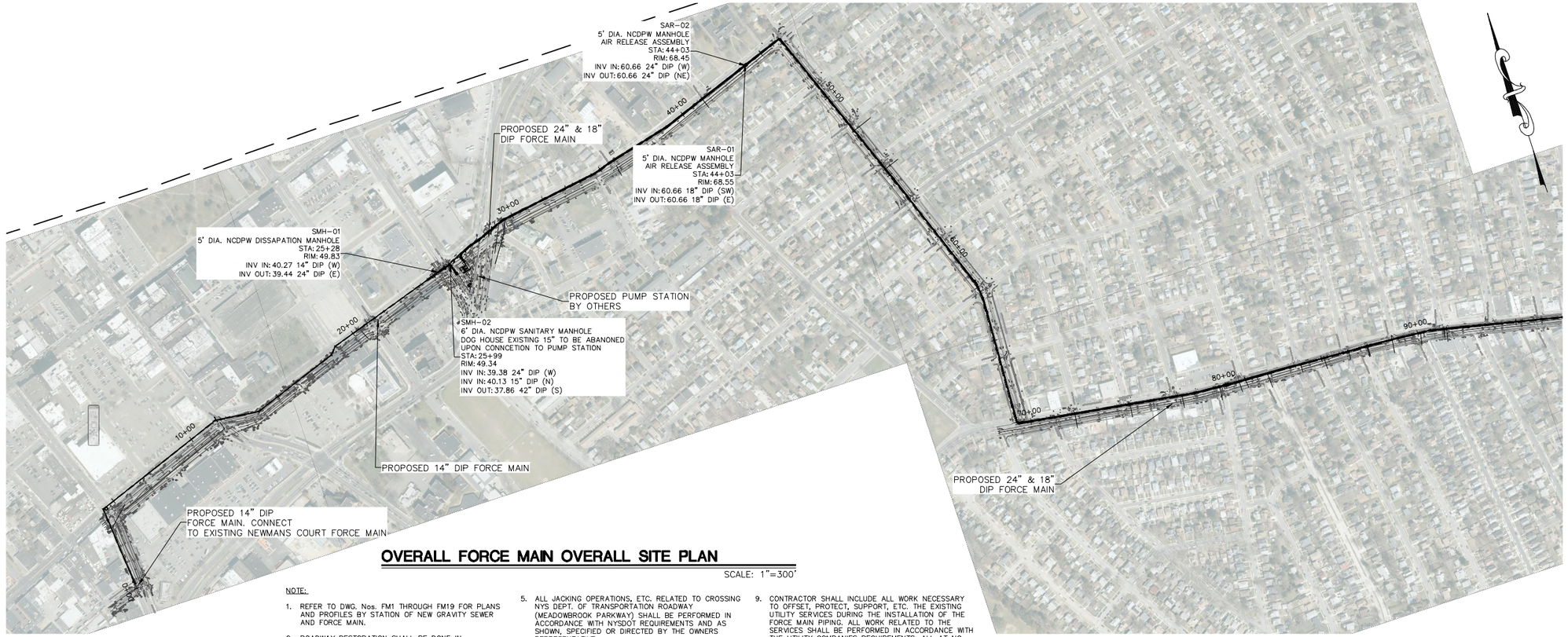

OVERALL FORCE MAIN OVERALL SITE PLAN

SCALE: 1"=300'

NOTE:

1. REFER TO DWG. Nos. FM1 THROUGH FM19 FOR PLANS AND PROFILES BY STATION OF NEW GRAVITY SEWER AND FORCE MAIN.
2. ROADWAY RESTORATION SHALL BE DONE IN ACCORDANCE WITH NASSAU COUNTY DPW STANDARDS AND SPECIFICATION.
3. ANY SERVICE CONNECTIONS DAMAGED BY CONSTRUCTION SHALL BE REPAIRED OR REPLACED BY CONTRACTOR AT NO ADDITIONAL COST TO OWNER.
4. LOCATIONS OF EXISTING UTILITIES PROVIDED BY NCDPW, VILLAGE OF HEMPSTEAD AND ANY PUBLIC/PRIVATE UTILITY COMPANIES. DEPTH TO UNDERGROUND GAS, ELECTRIC, TRAFFIC AND TELEPHONE UTILITIES ASSUMED 30- INCHES' BELOW EXISTING GRADE. DEPTH TO WATER UTILITIES (i.e., WATER MAINS AND SERVICES) ASSUMED 4'-0" BELOW GRADE.
5. ALL JACKING OPERATIONS, ETC. RELATED TO CROSSING NYS DEPT. OF TRANSPORTATION ROADWAY (MEADOWBROOK PARKWAY) SHALL BE PERFORMED IN ACCORDANCE WITH NYSDOT REQUIREMENTS AND AS SHOWN, SPECIFIED OR DIRECTED BY THE OWNERS REPRESENTATIVE.
6. TEST PITS SHALL BE PERFORMED BY THE CONTRACTOR PRIOR TO CONSTRUCTION OF JACKING AND RECEIVING PITS. COSTS FOR TEST PITS SHALL BE INCLUDED IN THE LUMP SUM BID PRICE.
7. RESTORE ALL EXISTING SURFACE FEATURES TO ORIGINAL CONDITION FOLLOWING CONSTRUCTION.
8. DIP FORCE MAINS SHALL BE PLACED WITHIN THE STEEL CASING SUCH THAT THEY ARE ELECTRICALLY INSULATED FROM EACH OTHER. THE INSIDE DIAMETER OF THE CASING PIPE SHALL BE SUFFICIENT TO PERMIT THE SPACE BETWEEN THE DIP FORCE MAIN AND THE CASING PIPE TO BE FILLED WITH CONCRETE GROUT.
9. CONTRACTOR SHALL INCLUDE ALL WORK NECESSARY TO OFFSET, PROTECT, SUPPORT, ETC. THE EXISTING UTILITY SERVICES DURING THE INSTALLATION OF THE FORCE MAIN PIPING. ALL WORK RELATED TO THE SERVICES SHALL BE PERFORMED IN ACCORDANCE WITH THE UTILITY COMPANIES REQUIREMENTS, ALL AT NO ADDITIONAL COST TO THE OWNER.

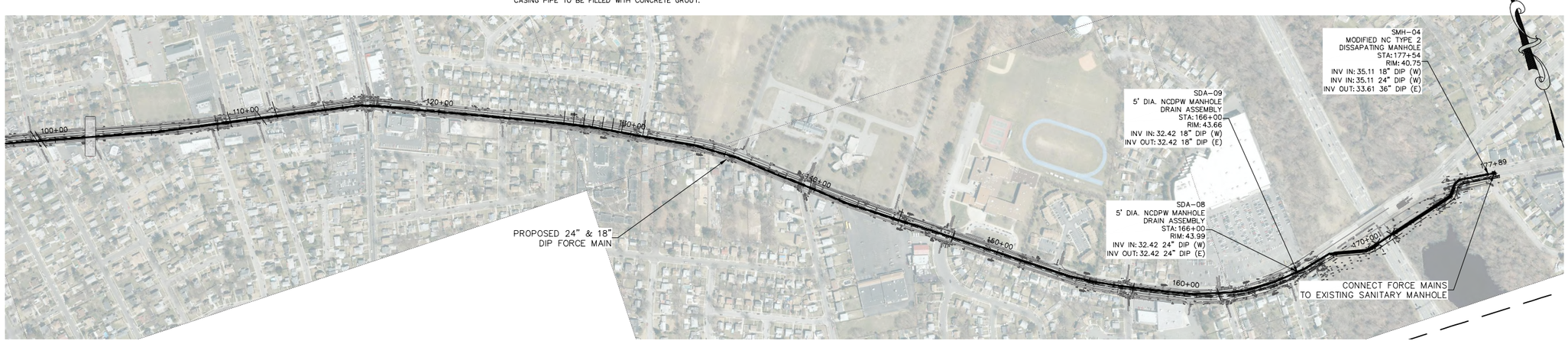

SEPARATELY BOUND SPECIFICATIONS ARE PART OF THIS CONTRACT

Figure 2

NO.	DATE	REVISION DESCRIPTION	INT.

UNAUTHORIZED ALTERATION OR ADDITION TO THIS DOCUMENT IS A VIOLATION OF SECTION 7209 OF THE NEW YORK STATE EDUCATION LAW.

THESE DOCUMENTS (OR COPIES OF ANY THEREOF) PREPARED BY OR BEARING THE SEAL OF THE ENGINEER, SHALL NOT BE REUSED FOR ANY EXTENSIONS OF THE PROJECT OR ANY OTHER PROJECT WITHOUT THE WRITTEN CONSENT OF THE ENGINEER.

CAMERON ENGINEERING & ASSOCIATES, LLP
100 Sunnyside Boulevard, Suite 100, Woodbury, NY 11797 T: (516) 827-4900
45 West 36th Street, 3rd Floor, New York, NY 10018 T: (212) 324-4000
303 Tarrytown Road, 1st Floor, White Plains, NY 10603 T: (914) 723-8300
Corporate Seal Initiated 1996 State of New York
www.Cameronengineering.com

COPYRIGHT

PROJECT NAME:
NCDPW CONTRACT NO. 3P311-09S
FORCE MAIN CONSTRUCTION

PROJECT LOCATION:
VILLAGE OF HEMPSTEAD, NEW YORK
FINAL REVIEW SUBMISSION

TITLE:
OVERALL FORCE MAIN SITE PLAN

DISCIPLINE:
CIVIL

PROJECT ENGINEER:	PROJECT NO.	DRAWING NO.
JDB	CE2415B-02	C-1
DESIGNED BY: JDB	JOB NO. CE2415B-02	DRAWING 5 of 34
DRAWN BY: FD	DATE: FEB. 2015	
CHECKED BY: MW/MR	SCALE: AS SHOWN	

PLOT SCALE=1 \\CE2415B-02-FORCEMAIN\DESIGN\C-4 OVERALL FORCE MAIN SITE PLAN.dwg, Date:March 3, 2015, Paste:ansi1x17(PDF), Plotted by:Joseph Bouzo

Unauthorized alteration or addition to this survey is a violation of section 7209, subdivision 2, of the New York State Education Law. Copies of this survey map not bearing the land surveyor's inked or embossed seal shall not be considered to be a valid copy.

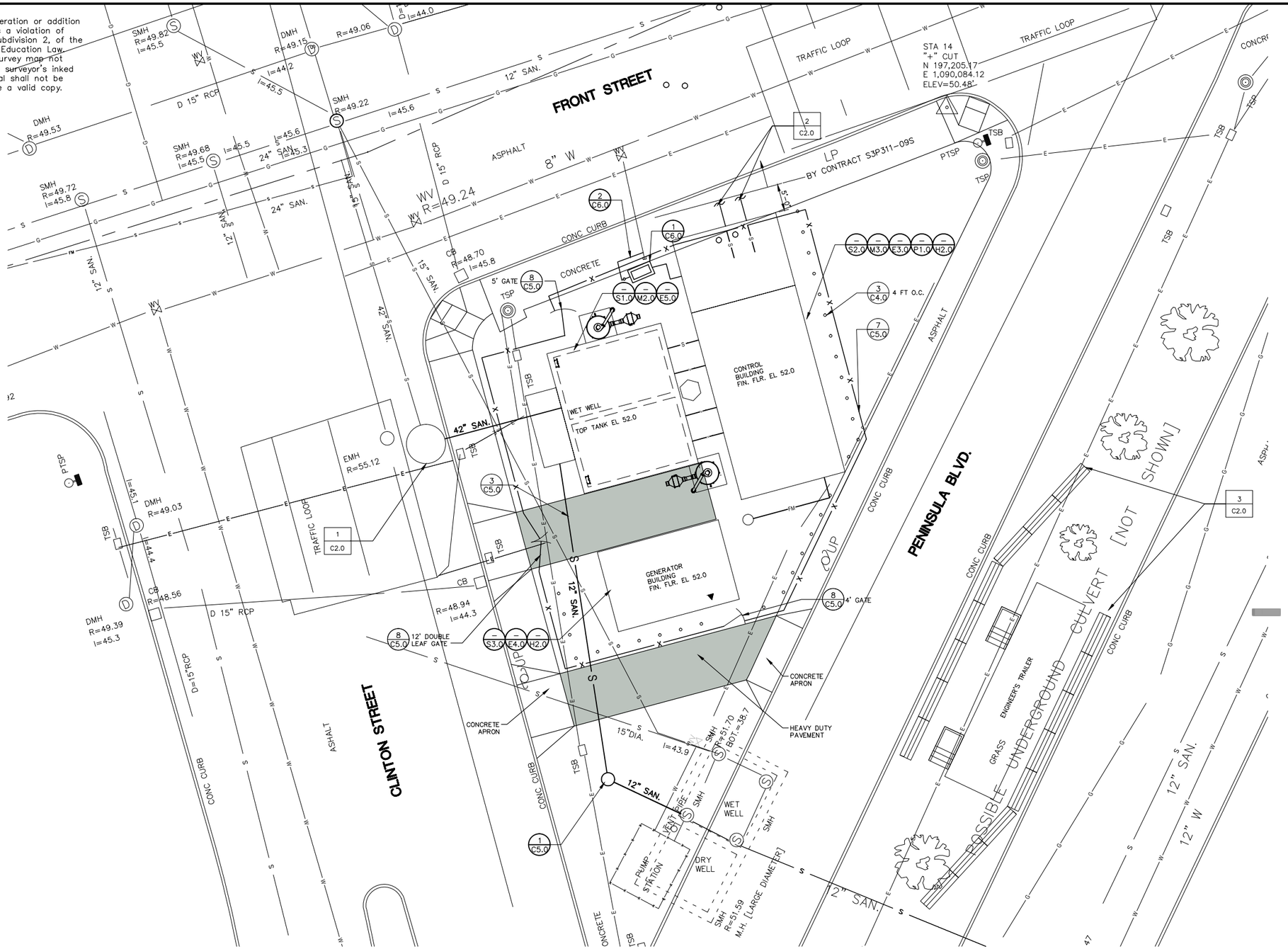

1 **SITE PLAN**

GRAPHIC SCALE

10 0 5 10 20

(IN FEET)
HORIZ. 1 inch = 10 ft.

LEGEND

NEW ASPHALT PAVEMENT AND BASE

NOTES:

1. MANHOLE AND UPSTREAM SEWER WORK IS UNDER PROJECT NO. S3P311-09S
2. FORCE MAIN PIPING FROM 5 FEET BEYOND FACE OF CONTROL BUILDING IS WORK UNDER PROJECT NO. S3P311-09S
3. PROVIDE 64 LF PRECAST CONCRETE JERSEY BARRIER ON EACH SIDE OF ENGINEERS TRAILER

Figure 3

New York 811
www.newyork-811.com
- Call Before You Dig
- Wait The Required Time
- Confirm Utility Response
- Respect The Marks
- Dig With Care

1-800-272-4480 or 811

NO.	DATE	REVISION DESCRIPTION	INT.

UNAUTHORIZED ALTERATION OR ADDITION TO THIS DOCUMENT IS A VIOLATION OF SECTION 7209 OF THE NEW YORK STATE EDUCATION LAW.

THESE DOCUMENTS (OR COPIES OF ANY THEREOF) PREPARED BY OR BEARING THE SEAL OF THE ENGINEER, SHALL NOT BE REUSED FOR ANY EXTENSIONS OF THE PROJECT OR ANY OTHER PROJECT WITHOUT THE WRITTEN CONSENT OF THE ENGINEER.

CAMERON ENGINEERING & ASSOCIATES, LLP
100 Sunnyside Boulevard, Suite 100, Woodbury, NY 11797 T: (516) 827-4900
www.Cameronengineering.com CON'S REG:411
IN ASSOCIATION WITH:

PROJECT NAME:
NCDPW PROJECT NO. S3P311-09G, HEMPSTEAD WASTEWATER PUMPING STATION

PROJECT LOCATION:
VILLAGE OF HEMPSTEAD, NEW YORK

TITLE:
HEMPSTEAD PUMPING STATION
SITE PLAN AND SITE PIPING PLAN

DISCIPLINE:
CIVIL

FINAL REVIEW SUBMISSION

PROJECT ENGINEER: SCH	PROJECT NO. S3P311-09G	DRAWING NO.	
DESIGNED BY: SCH	JOB NO. CENA 14-01	C2.0	
DRAWN BY: BAC / JIN	DATE: FEB. 2015	DRAWING 6 of 63	
CHECKED BY: –	SCALE: AS SHOWN		

PLOT SCALE:N:\cad\CENA\14-01\civil\C2.0 - DIVERSION PUMPING STATION SITE PLAN AND SITE PIPING PLAN T.dwg, Date:March 2, 2015, Plotted by:James M. Vierling

SOIL EROSION AND SEDIMENT CONTROL NOTES

1. ALL SOIL EROSION AND SEDIMENT CONTROL PRACTICES SHALL BE INSTALLED PRIOR TO ANY MAJOR SOIL DISTURBANCE, OR IN THEIR PROPER SEQUENCE, AND MAINTAINED UNTIL PERMANENT PROTECTION IS ESTABLISHED. CONTRACTOR SHALL COMPLY WITH ALL PHASE II STORM WATER REQUIREMENTS.
2. ALL WORK SHALL BE DONE IN ACCORDANCE WITH THE STANDARDS FOR SOIL EROSION AND SEDIMENT CONTROL IN THE STATE OF NEW YORK. THE CONTRACTOR SHALL SUBMIT AN EROSION CONTROL PLAN TO THE OWNER'S REPRESENTATIVE FOR APPROVAL PRIOR TO CONSTRUCTION.
3. IMMEDIATELY FOLLOWING INITIAL DISTURBANCE OR ROUGH GRADING, ALL CRITICAL AREAS SUBJECT TO EROSION (i.e., STEEP SLOPES AND GRAVEL EMBANKMENTS) SHALL RECEIVE A TEMPORARY COVER OF STRAW MULCH OR A SUITABLE EQUIVALENT, AT A RATE OF TWO (2) TONS PER ACRE, ACCORDING TO STATE STANDARDS.
4. AT THE TIME WHEN THE SITE PREPARATION FOR PERMANENT VEGETATIVE STABILIZATION IS GOING TO BE ACCOMPLISHED, ANY SOIL THAT WILL NOT PROVIDE A SUITABLE ENVIRONMENT TO SUPPORT ADEQUATE VEGETATIVE GROUND COVER, SHALL BE REMOVED OR TREATED IN SUCH A WAY THAT WILL PERMANENTLY ADJUST THE SOIL CONDITIONS AND RENDER IT SUITABLE FOR VEGETATIVE COVER.
5. THE CONTRACTOR SHALL TAKE NECESSARY MEASURES TO MAINTAIN DUST CONTROL. VEHICLES SHALL BE CLEANED, AS NECESSARY, PRIOR TO USING PUBLIC STREETS. PAVED ROADS SHALL BE SPRINKLED WITH WATER. WORK AREAS ON ROADWAYS TO BE CLEANED MECHANICALLY ON SCHEDULED BASIS NO LESS THAN WEEKLY.
6. ALL SOIL EROSION AND SEDIMENT CONTROL DEVICES SHALL BE LOCATED IN THE FIELD AS REQUIRED OR AT THE DIRECTION OF THE OWNER'S REPRESENTATIVE. THE CONTRACT DRAWINGS ARE NOT INTENDED TO SHOW THE LOCATION AND DETAILS FOR ALL SUCH DEVICES BUT ARE TO BE USED AS A REASONABLE GUIDE.
7. ANY CHANGES TO THE CERTIFIED SOIL EROSION AND SEDIMENT CONTROL PLAN SHALL REQUIRE THE SUBMISSION OF A REVISED SOIL EROSION AND SEDIMENT CONTROL PLAN TO THE STATE DEC FOR THE RECERTIFICATION. THE REVISED PLANS MUST MEET ALL CURRENT STATE SOIL EROSION AND SEDIMENT CONTROL PRACTICES.
8. CONTRACTOR SHALL OBTAIN ALL REQUIRED PERMITS.
9. UPON COMPLETION OF CONSTRUCTION WORK AND AFTER FINAL GRADING AND WHEN PERMANENT STABILIZATION HAS BEEN ESTABLISHED, THE STRAW BALES SHALL BE REMOVED BY THE CONTRACTOR.
10. ALL EXCESS EXCAVATED MATERIAL, EXCEPT FOR TOPSOIL, SHALL BE REMOVED FROM THE SITE BY THE CONTRACTOR IN ACCORDANCE WITH THE CONTRACT DOCUMENTS.
11. ALL UTILITIES AND CATCH BASIN INLETS MUST BE PROTECTED PRIOR TO START OF CONSTRUCTION.
12. THE CONTRACTOR SHALL PROVIDE A DETAILED SEQUENCE OF CONSTRUCTION OPERATIONS FOR REVIEW AND SUBMITTAL TO THE OWNER'S REPRESENTATIVE PRIOR TO THE START OF CONSTRUCTION ACTIVITIES.
13. ALL SOIL EROSION AND SEDIMENT CONTROL PRACTICES SHALL BE IN PLACE WHERE POSSIBLE PRIOR TO, OR IMMEDIATELY FOLLOWING SITE AND ACCESS CLEARING.
14. ALL SOIL EROSION AND SEDIMENT CONTROL PRACTICES SHALL BE LEFT IN PLACE AND MAINTAINED; INCLUDING SILT AND SEDIMENT REMOVAL, UNTIL CONSTRUCTION IS COMPLETED, AREA IS STABILIZED AND THE OWNER'S REPRESENTATIVE SO DIRECTS.
15. THE CONTRACTOR SHALL CONFINE SOIL DISTURBANCE ACTIVITY TO THE AREAS CONTAINED WITHIN THE LIMITS OF THE PROJECT SITE, EXCEPT AS DIRECTED BY THE OWNER'S REPRESENTATIVE.
16. SOIL STABILIZATION METHODS SHALL BE UNDERTAKEN COINCIDENTALLY WITH ALL MAJOR SITE IMPROVEMENTS AND CONTINUE DURING THE ENTIRE CONSTRUCTION ACTIVITY PERIOD.
17. UPON COMPLETION OF FINAL GRADING, IF THE SEASON PREVENTS THE ESTABLISHMENT OF A PERMANENT COVER, THE DISTURBED AREA WILL BE TEMPORARILY SEEDED IN ACCORDANCE WITH THE CONTRACT SPECIFICATIONS.
18. PERMANENT VEGETATION TO BE SEEDED ON ALL EXPOSED AREAS WITH SEVEN (7) DAYS AFTER FINAL GRADING. MULCH TO BE USED AS NECESSARY FOR PROTECTION UNTIL SEEDING IS ESTABLISHED.
19. AT THE TIME WHEN THE SITE PREPARATION FOR PERMANENT VEGETATIVE STABILIZATION IS GOING TO BE ACCOMPLISHED, ANY SOIL THAT WILL NOT PROVIDE A SUITABLE ENVIRONMENT TO SUPPORT ADEQUATE VEGETATIVE GROUND COVER SHALL BE REMOVED OR TREATED IN SUCH A WAY THAT WILL COVER. IF THE REMOVAL OR TREATMENT OF THE SOLID WILL NOT PROVIDE SUITABLE CONDITIONS, NON-VEGETATIVE MEANS OF PERMANENT GROUND STABILIZATION SHALL BE EMPLOYED WITH ENGINEER'S APPROVAL.

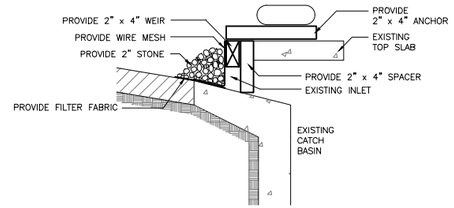

SECTIONAL VIEW

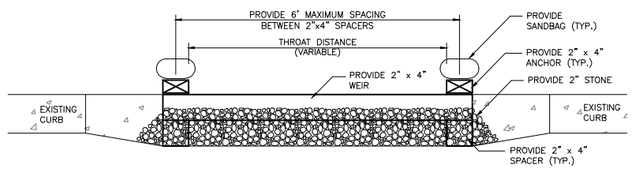

FRONT ELEVATION VIEW

NOTES:

1. FILTER FABRIC SHALL HAVE AN EOS OF 40-85.
2. WOODEN FRAME SHALL BE CONSTRUCTED OF 2" x 4" CONSTRUCTION GRADE LUMBER.
3. WIRE MESH ACROSS THROAT SHALL BE A CONTINUOUS PIECE HAVING A MINIMUM WIDTH OF 30 INCHES AND HAVING A LENGTH 4 FEET LONGER THAN THE CATCH BASIN THROAT. IT SHALL BE SHAPED AND SECURELY NAILED TO THE 2" x 4" WEIR.
4. THE WEIR SHALL BE SECURELY NAILED TO 2" x 4" SPACERS SPACED NO MORE THAN 6 FEET APART.
5. THE ASSEMBLY SHALL BE PLACED AGAINST THE INLET AND SECURED BY 2" x 4" ANCHORS 2 FEET LONG EXTENDING ACROSS THE TOP OF THE INLET AND HELD IN PLACE BY SANDBAGS OR OTHER WEIGHTS DESIGNATED BY THE OWNER'S REPRESENTATIVE.

EROSION AND SEDIMENT CONTROL FOR CURB INLET DETAIL

SCALE: NTS

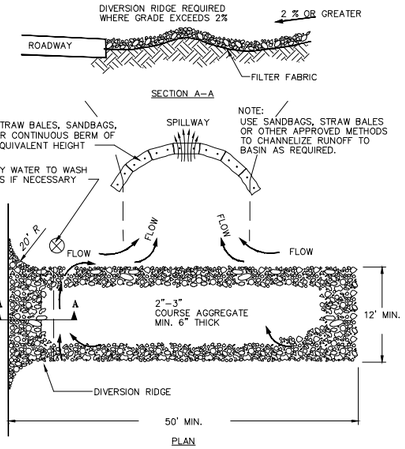

NOTES:

1. THE ENTRANCE SHALL BE MAINTAINED IN A CONDITION THAT WILL PREVENT TRACKING OR FLOWING OF SEDIMENT ONTO PUBLIC RIGHT-OF-WAYS. THIS MAY REQUIRE TOP DRESSING, REPAIR AND/OR CLEANOUT OF ANY MEASURES USED TO TRAP SEDIMENT.
2. WHEN NECESSARY, WHEELS SHALL BE CLEANED PRIOR TO ENTRANCE ONTO PUBLIC RIGHT-OF-WAY.
3. WHEN WASHING IS REQUIRED, IT SHALL BE DONE ON AN AREA STABILIZED WITH CRUSHED STONE THAT DRAINS INTO AN APPROVED SEDIMENT TRAP OR SEDIMENT BASIN.

TEMPORARY CONSTRUCTION ENTRANCE

SCALE: N.T.S.

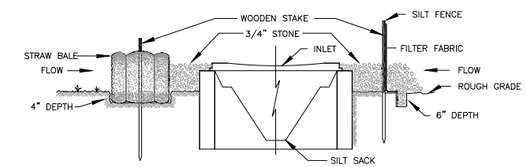

INSTALLATION NOTES

SILT FENCE

1. EXCAVATE A 6 INCH x 6 INCH TRENCH, OFFSET APPROXIMATELY 2 FEET FROM THE INLET PERIMETER.
2. UNROLL A SECTION AT A TIME AND POSITION THE POSTS AGAINST THE BACK (DOWNSTREAM) WALL OF THE TRENCH (NET SIDE AWAY FROM DIRECTION OF FLOW).
3. DRIVE THE POST INTO THE GROUND UNTIL NETTING IS APPROXIMATELY 2 INCHES THE FROM THE TRENCH BOTTOM.
4. LAY THE TOE-IN FLAP OF FABRIC ONTO THE UNDISTURBED BOTTOM OF THE TRENCH, BACKFILL THE TRENCH AND TAMP THE SOIL. STEEPER SLOPES REQUIRE AN INTERCEPT TRENCH.
5. JOIN SECTIONS AS SHOWN ABOVE. SUPPLEMENT WITH GRAVEL, PILED AGAINST THE FENCE.

STRAW BALES

1. PLACE BALES OF STRAW WITH ENDS TIGHTLY ABUTTING OTHER BALES TO SURROUND THE INLET. WHERE SLOPE AND SPACE PERMIT, ESTABLISH THE LINE OF BALES 2 TO 10 FEET AWAY FROM THE INLET. ANCHOR BALES IN PLACE BY DRIVING REBAR OR 2" x 2" STAKES THROUGH THE BALES. SUPPLEMENT WITH GRAVEL, PILED AGAINST THE BALES.
2. SEDIMENT SHALL BE REMOVED AND THE TRAP RESTORED TO ITS ORIGINAL DIMENSIONS WHEN THE SEDIMENT HAS ACCUMULATED TO 1/2 THE DESIGN DEPTH OF THE TRAP. REMOVED SEDIMENT SHALL BE DEPOSITED IN A SUITABLE AREA AND IN SUCH A MANNER THAT IT WILL NOT ERODE.
3. THE STRUCTURE SHALL BE INSPECTED AFTER EACH RAIN AND REPAIRS MADE AS NEEDED.
4. CONSTRUCTION OPERATIONS SHALL BE CARRIED OUT IN SUCH A MANNER THAT EROSION AND WATER POLLUTION SHALL BE MINIMIZED.
5. THE SEDIMENT TRAP SHALL BE REMOVED AND THE AREA STABILIZED WHEN THE REMAINING DRAINAGE AREA HAS BEEN PROPERLY STABILIZED.

STORMWATER GRATE INLET PROTECTION

SCALE: N.T.S.

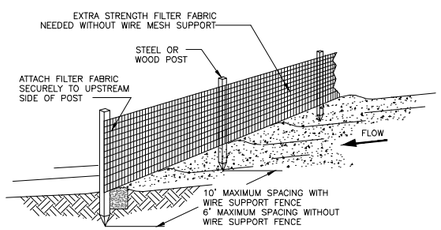

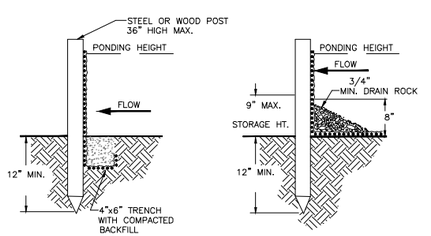

TRENCH DETAIL

INSTALLATION WITHOUT TRENCHING

NOTES:

1. SILT FENCE SHALL BE PLACED ON SLOPE CONTOURS TO MAXIMIZE PONDING EFFICIENCY.
2. INSPECT AND REPAIR FENCE AFTER EACH STORM EVENT AND REMOVE SEDIMENT WHEN NECESSARY. 9" MAXIMUM RECOMMENDED STORAGE HEIGHT.
3. REMOVED SEDIMENT SHALL BE DEPOSITED TO AN AREA THAT WILL NOT CONTRIBUTE SEDIMENT OFF-SITE AND CAN BE PERMANENTLY STABILIZED.

SILT FENCE DETAIL

SCALE: N.T.S.

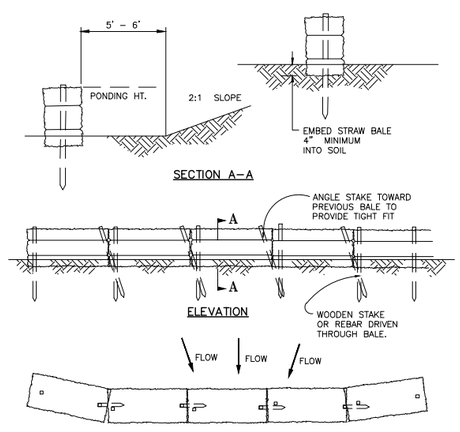

NOTES:

1. THE STRAW BALES SHALL BE PLACED ON SLOPE CONTOUR.
2. BALES TO BE PLACED IN A ROW WITH THE ENDS TIGHTLY ABUTTING.
3. KEY IN BALES TO PREVENT EROSION OR FLOW UNDER BALES.

STRAW BALE DIKE DETAIL

SCALE: N.T.S.

SEPARATELY BOUND SPECIFICATIONS ARE PART OF THIS CONTRACT

Figure 4

NO.	DATE	REVISION DESCRIPTION	INT.

UNAUTHORIZED ALTERATION OR ADDITION TO THIS DOCUMENT IS A VIOLATION OF SECTION 7209 OF THE NEW YORK STATE EDUCATION LAW.

THESE DOCUMENTS (OR COPIES OF ANY THEREOF) PREPARED BY OR BEARING THE SEAL OF THE ENGINEER, SHALL NOT BE REUSED FOR ANY EXTENSIONS OF THE PROJECT OR ANY OTHER PROJECT WITHOUT THE WRITTEN CONSENT OF THE ENGINEER.

CAMERON ENGINEERING & ASSOCIATES, LLP
100 Sunnyside Boulevard, Suite 100, Woodbury, NY 11797 T: (516) 827-4900
45 West 36th Street, 3rd Floor, New York, NY 10018 T: (212) 324-4000
303 Tarrytown Road, 1st Floor, White Plains, NY 10603 T: (914) 723-8300
Corporate Seal Initiated 1996 State of New York
www.Cameronengineering.com

COPYRIGHT

PROJECT NAME: NCDPW CONTRACT NO. 3P311-09S FORCE MAIN CONSTRUCTION

PROJECT LOCATION: VILLAGE OF HEMPSTEAD, NEW YORK FINAL REVIEW SUBMISSION

TITLE: SOIL EROSION AND SEDIMENT CONTROL NOTES AND DETAILS

DISCIPLINE: CIVIL

PROJECT ENGINEER:	PROJECT NO.	DRAWING NO.
JDB	CE2415B-02	G-3
DESIGNED BY: JDB	JOB NO. CE2415B-02	DRAWING 4 of 34
DRAWN BY: JDB	DATE: FEB. 2015	
CHECKED BY: MR/MW	SCALE: AS SHOWN	

PLOT SCALE: \CE2415B-02-FORCEMAIN\DESIGN\CE2415B-02-00-IN.dwg, Date:March 3, 2015, Pentup:11x17(PDF), Plotted by:Joseph Bouza

Unauthorized alteration or addition to this survey is a violation of section 7209, subdivision 2, of the New York State Education Law. Copies of this survey map not bearing the land surveyor's inked or embossed seal shall not be considered to be a valid copy.

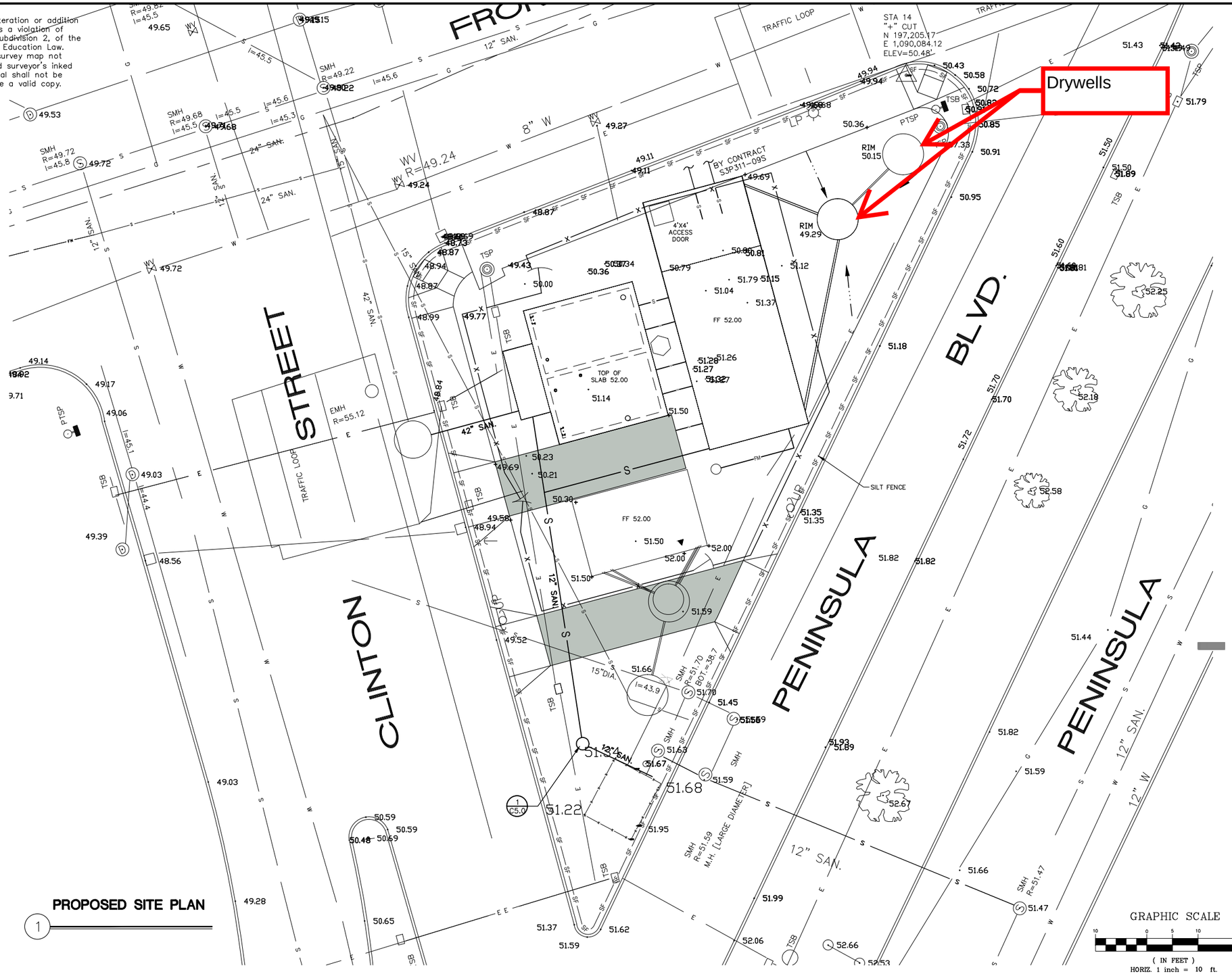

PROPOSED SITE PLAN

1

STORM DRAINAGE CALCULATIONS

PROVIDE STORAGE FOR ROOF RUNOFF FROM 5" STORM.

RUNOFF COEFFICIENTS:
ROOF (C=1.0)

TRIBUTARY AREA TO DRAINAGE SYSTEM:
CONTROL BUILDING = 720 SF
GENERATOR BUILDING = 384 SF

CONTROL BUILDING WEIGHTED RUNOFF COEFFICIENT:
ROOF (C=1.0)

VOLUME REQUIRED = 720 x (5/12) x (1.0) = 300 CF

PROVIDED:

USE 8'ø DRYWELLS (42.23 CF/VF)
USE: 1 POOL, 8'ø AT 8' EFFECTIVE DEPTH = 337.84 CF
337.84 CF > 300 CF

GENERATOR BUILDING WEIGHTED RUNOFF COEFFICIENT:
ROOF (C=1.0)

VOLUME REQUIRED = 384 x (5/12) x (1.0) = 160 CF

PROVIDED:
USE 6'ø DRYWELLS (22.23 CF/VF)
USE: 1 POOL, 6'ø AT 8' EFFECTIVE DEPTH = 178.64 CF
178.64 CF > 160 CF

SITE NOTES

1. BUSINESS NAME: VILLAGE OF HEMPSTEAD WASTEWATER PUMPING STATION.
2. STREET ADDRESS: CLINTON STREET.
3. OWNER: NASSAU COUNTY DEPARTMENT OF PUBLIC WORKS.
4. OWNER'S ADDRESS: 1194 PROSPECT AVENUE, WESTBURY, NY 11590.
5. OWNER'S TELEPHONE: 1-516-571-9604.
6. COUNTY SECTION #34.
7. COUNTY BLOCK #350.
8. COUNTY LOT #119.
9. SCHOOL DISTRICT #1.

Figure 5

New York 811
www.newyork-811.com
- Call Before You Dig
- Wait The Required Time
- Confirm Utility Response
- Respect The Marks
- Dig With Care

1-800-272-4480 or 811

NO.	DATE	REVISION DESCRIPTION	INT.

UNAUTHORIZED ALTERATION OR ADDITION TO THIS DOCUMENT IS A VIOLATION OF SECTION 7209 OF THE NEW YORK STATE EDUCATION LAW.

THESE DOCUMENTS (OR COPIES OF ANY THEREOF) PREPARED BY OR BEARING THE SEAL OF THE ENGINEER, SHALL NOT BE REUSED FOR ANY EXTENSIONS OF THE PROJECT OR ANY OTHER PROJECT WITHOUT THE WRITTEN CONSENT OF THE ENGINEER.

CAMERON ENGINEERING & ASSOCIATES, LLP
100 Sunnyside Boulevard, Suite 100, Woodbury, NY 11797 T: (516) 827-4900
www.Cameronengineering.com CON'RG:2412
IN ASSOCIATION WITH:

PROJECT NAME:
NCDPW PROJECT NO. S3P311-09G, HEMPSTEAD WASTEWATER PUMPING STATION

PROJECT LOCATION:
VILLAGE OF HEMPSTEAD, NEW YORK

TITLE:
HEMPSTEAD PUMPING STATION GRADING AND LANDSCAPING PLAN

DISCIPLINE:
CIVIL

FINAL REVIEW SUBMISSION

PROJECT ENGINEER:	PROJECT NO.	DRAWING NO.
SCH	S3P311-09G	C3.0
DESIGNED BY: SCH	JOB NO. CENA 14-01	DRAWING 7 of 63
DRAWN BY: BAC / JIN	DATE: MAR. 2015	
CHECKED BY: –	SCALE: AS SHOWN	

PLOT SCALE:N:\cad\CENA\14-01\civil\C3.0.dwg, Date:March 2, 2015, Plotted by:James M. Verling

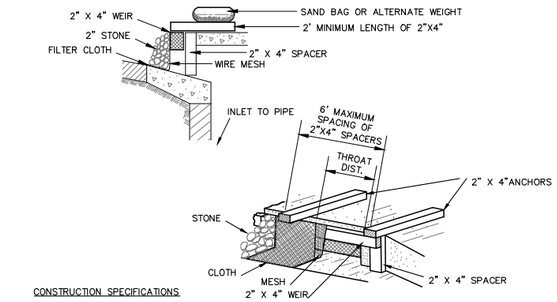

CONSTRUCTION SPECIFICATIONS

1. FILTER FABRIC SHALL HAVE AN EOS OF 40–85.
2. WOODEN FRAME SHALL BE CONSTRUCTED OF 2" x 4" CONSTRUCTION GRADE LUMBER
3. WIRE MESH ACROSS THROAT SHALL BE A CONTINUOUS PIECE 30 INCH MINIMUM WIDTH WITH A LENGTH 4 FEET LONGER THAN THE THROAT. IT SHALL BE SHAPED AND SECURELY NAILED TO A 2" x 4" WEIR.
4. THE WEIR SHALL BE SECURELY NAILED TO 2" x 4" SPACERS 9 INCHES LONG SPACED NO MORE THAN 6 FEET APART.
5. THE ASSEMBLY SHALL BE PLACED AGAINST THE INLET AND SECURED BY 2" x 4" ANCHORS 2 FEET LONG EXTENDING ACROSS THE TOP OF THE INLET AND HELD IN PLACE BY SANDBAGS OR ALTERNATE WEIGHTS.

MAXIMUM DRAINAGE AREA OF 1 ACRE

1 CURB DROP INLET PROTECTION

SCALE: N.T.S.

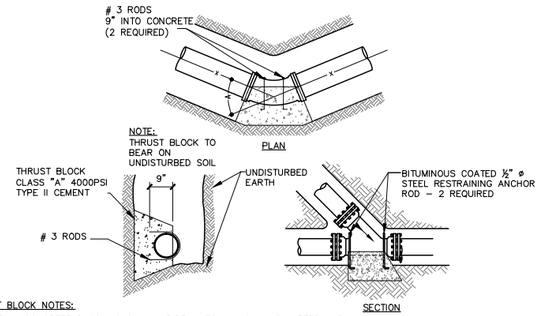

THRUST BLOCK NOTES:

1. INSTALL CONCRETE BLOCKING ON ALL PIPE LINES 4–INCH IN DIAMETER AND LARGER AT ALL TEES, PLUGS, CAPS, AND AT BENDS DEFLECTING 22 1/2 DEGREES OR MORE. BLOCKING SHALL BE A CONCRETE MIX HAVING A COMPRESSIVE STRENGTH OF NOT LESS THAN 2,000 PSI. PLACE BLOCKING BETWEEN SOLID GROUND AND THE FITTING TO BE ANCHORED. PLACE BLOCKING SO THAT THE PIPE AND FITTING JOINTS WILL BE ACCESSIBLE FOR REPAIR.
2. FOR ALL PIPELINES, TIE RODS AND PIPE CLAMPS OR RETAINER GLANDS SHALL BE PROVIDED IN ADDITION TO CONCRETE BLOCKING SPECIFIED ABOVE AT AND IN THE VICINITY OF TEES, PLUGS CAPS AND BENDS DEFLECTING 22–1/2 DEGREES OR MORE.
3. FOR ALL VERTICAL BENDS, 3/4–INCH DIAMETER TIE RODS AND PIPE CLAMPS OR RETAINER GLANDS SHALL BE PROVIDED IN ADDITION TO THE CONCRETE BLOCKING SPECIFIED ABOVE FOR BENDS DEFLECTING 22–1/2 DEGREES OR MORE.

PIPE SIZE	DEAD END OR TEE	90° BEND	45° BEND	22–½° BEND
4"	1 ½	2	1	½
6"	3	4	2 ½	1 ½
8"	5	7	4	2
10"	7	10	5	2 ½
12"	10	15	7 ½	4
16",20",24"	16	24	12	6

THRUST BLOCK BEARING AREA

SQUARE FOOT BEARING AREA OF BLOCKING ON UNDISTURBED EARTH

NOTE:

MAX. TEST PRESSURE 200 PSI

2 THRUST BLOCK DETAIL

SCALE: N.T.S.

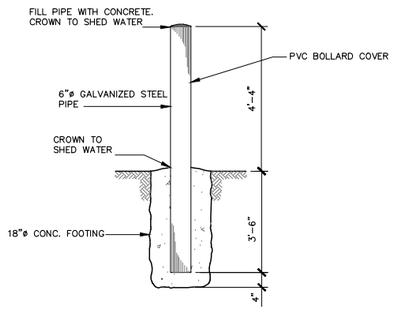

NOTE:

1. CONCRETE STRENGTH 4000 PSI AT 28 DAYS.

3 STEEL BOLLARD – 6" DIAMETER

SCALE: N.T.S.

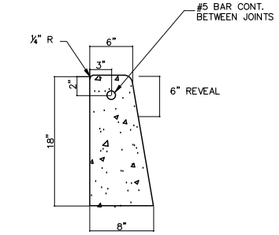

NOTES:

1. WOOD FLOAT AND BRUSH FINISH ON ALL SURFACES ABOVE GRADE.
2. AT ALL CURB ENDINGS, PROVIDE SMOOTH TRANSITION DOWN TO PAVED SURFACE.
3. PROVIDE 1/2" PREFORMED EXPANSION MATERIAL AT 20' ON CENTER AND AT ALL CORNERS. SET EXPANSION MATERIAL 1/2" BELOW EXPOSED SURFACES AND SEAL JOINT.
4. CONCRETE TO ACHIEVE 4000 PSI STRENGTH AT 28 DAYS.

4 NCDPW TYPE "C" CONCRETE CURB

SCALE: N.T.S.

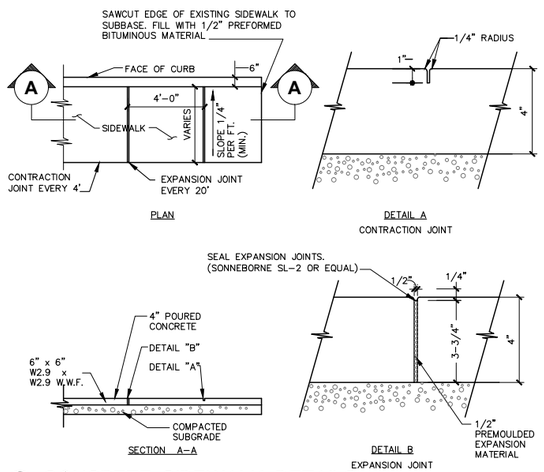

5 CONCRETE SIDEWALK DETAILS

SCALE: N.T.S.

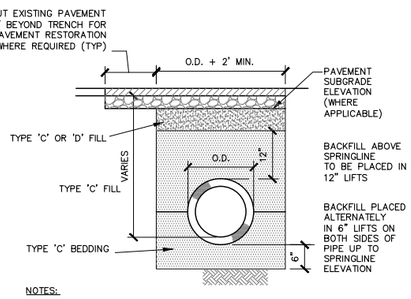

NOTES:

1. IF DEPTH OF TRENCH EXCEEDS 5', PROVIDE SHEETING AND BRACING OR A SHEETING BOX IN ACCORDANCE WITH OSHA REGULATIONS. AS AN ALTERNATIVE, IF PERMITTED BY THE ENGINEER, THE TRENCH WALLS MAY BE CUT BACK TO A 1:1 SLOPE OR THE NATURAL ANGLE OF REPOSE FOR THE SOIL, WHICHEVER IS GREATER.
2. COMPACT BACKFILL MATERIAL TO 95% MAXIMUM DENSITY IN ACCORDANCE WITH ASTM D1557.

6 PIPE TRENCH

SCALE: N.T.S.

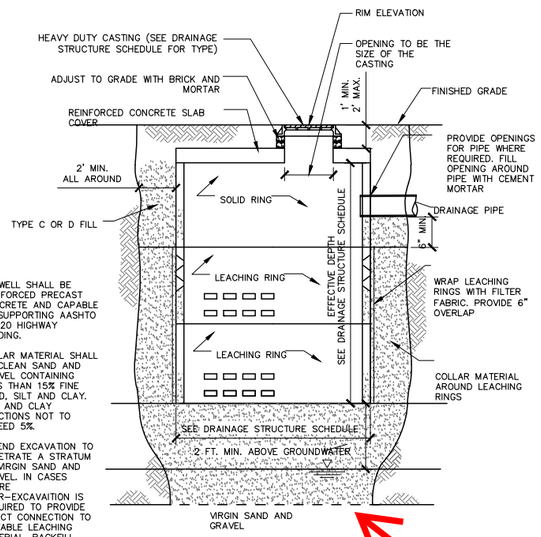

NOTES:

1. DRYWELL SHALL BE REINFORCED PRECAST CONCRETE AND CAPABLE OF SUPPORTING AASHTO HS–20 HIGHWAY LOADING.
2. COLLAR MATERIAL SHALL BE CLEAN SAND AND GRAVEL CONTAINING LESS THAN 15% FINE SAND, SILT AND CLAY. SILT AND CLAY FRACTIONS NOT TO EXCEED 5%.
3. EXTEND EXCAVATION TO PENETRATE A STRATUM OF VIRGIN SAND AND GRAVEL. IN CASES WHERE OVER–EXCAVAITION IS REQUIRED TO PROVIDE DIRECT CONNECTION TO SUITABLE LEACHING MATERIAL, BACKFILL ENTIRE EXCAVATION WITH CLEAN SAND AND GRAVEL.

7 DRYWELL WITH SLAB

SCALE: N.T.S.

Drywell

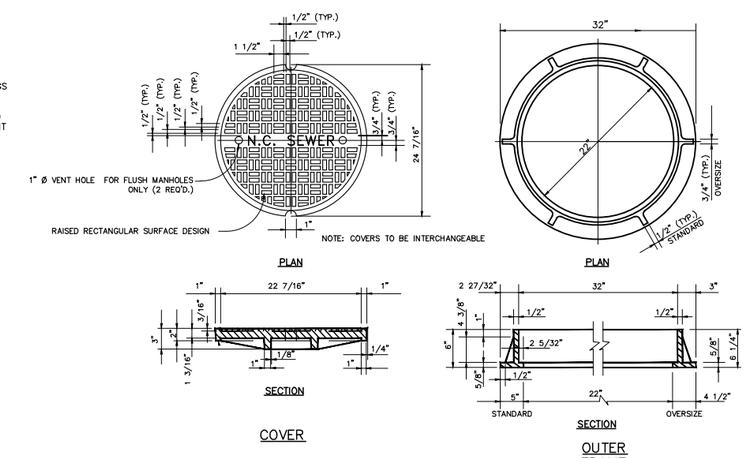

8 CIRCULAR FRAME AND COVER

SCALE: N.T.S.

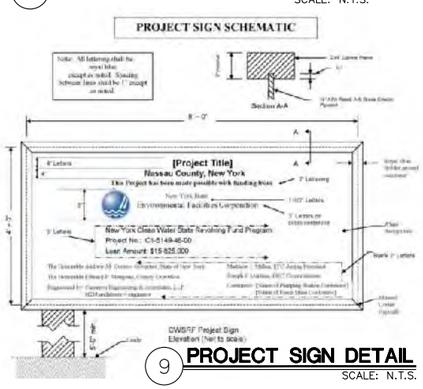

9 PROJECT SIGN DETAIL

SCALE: N.T.S.

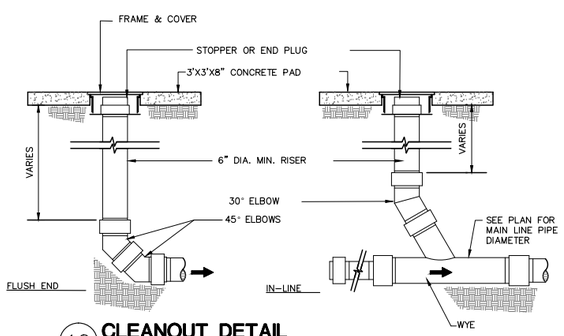

10 CLEANOUT DETAIL

SCALE: N.T.S.

Figure 6

NO.	DATE	REVISION DESCRIPTION	INT.

UNAUTHORIZED ALTERATION OR ADDITION TO THIS DOCUMENT IS A VIOLATION OF SECTION 7209 OF THE NEW YORK STATE EDUCATION LAW.

THESE DOCUMENTS (OR COPIES OF ANY THEREOF) PREPARED BY OR BEARING THE SEAL OF THE ENGINEER, SHALL NOT BE REUSED FOR ANY EXTENSIONS OF THE PROJECT OR ANY OTHER PROJECT WITHOUT THE WRITTEN CONSENT OF THE ENGINEER.

CAMERON ENGINEERING & ASSOCIATES, LLP
100 Sunnyside Boulevard, Suite 100, Woodbury, NY 11797 T: (516) 827-4900
www.Cameronengineering.com
COPYRIGHT

IN ASSOCIATION WITH:

PROJECT NAME: NCDPW PROJECT NO. S3P311–09G, HEMPSTEAD WASTEWATER PUMPING STATION

PROJECT LOCATION: VILLAGE OF HEMPSTEAD, NEW YORK

TITLE: HEMPSTEAD PUMPING STATION SITE DETAILS

DISCIPLINE: CIVIL

FINAL REVIEW SUBMISSION

PROJECT ENGINEER:	PROJECT NO.	DRAWING NO.
SCH	S3P311–09G	C4.0
DESIGNED BY: SCH	JOB NO. CENA 14–01	DRAWING 8 of 63
DRAWN BY: JIN	DATE: MAR. 2015	
CHECKED BY:	SCALE: AS SHOWN	

PLOT SCALE:\\cosdc\CENA\14-01\dwg\C4.0 SITE DETAILS.dwg, Date:March 2, 2015, Plotted by:James M. Verling

Unauthorized alteration or addition to this survey is a violation of section 7209, subdivision 2, of the New York State Education Law. Copies of this survey map not bearing the land surveyor's inked or embossed seal shall not be considered to be a valid copy.

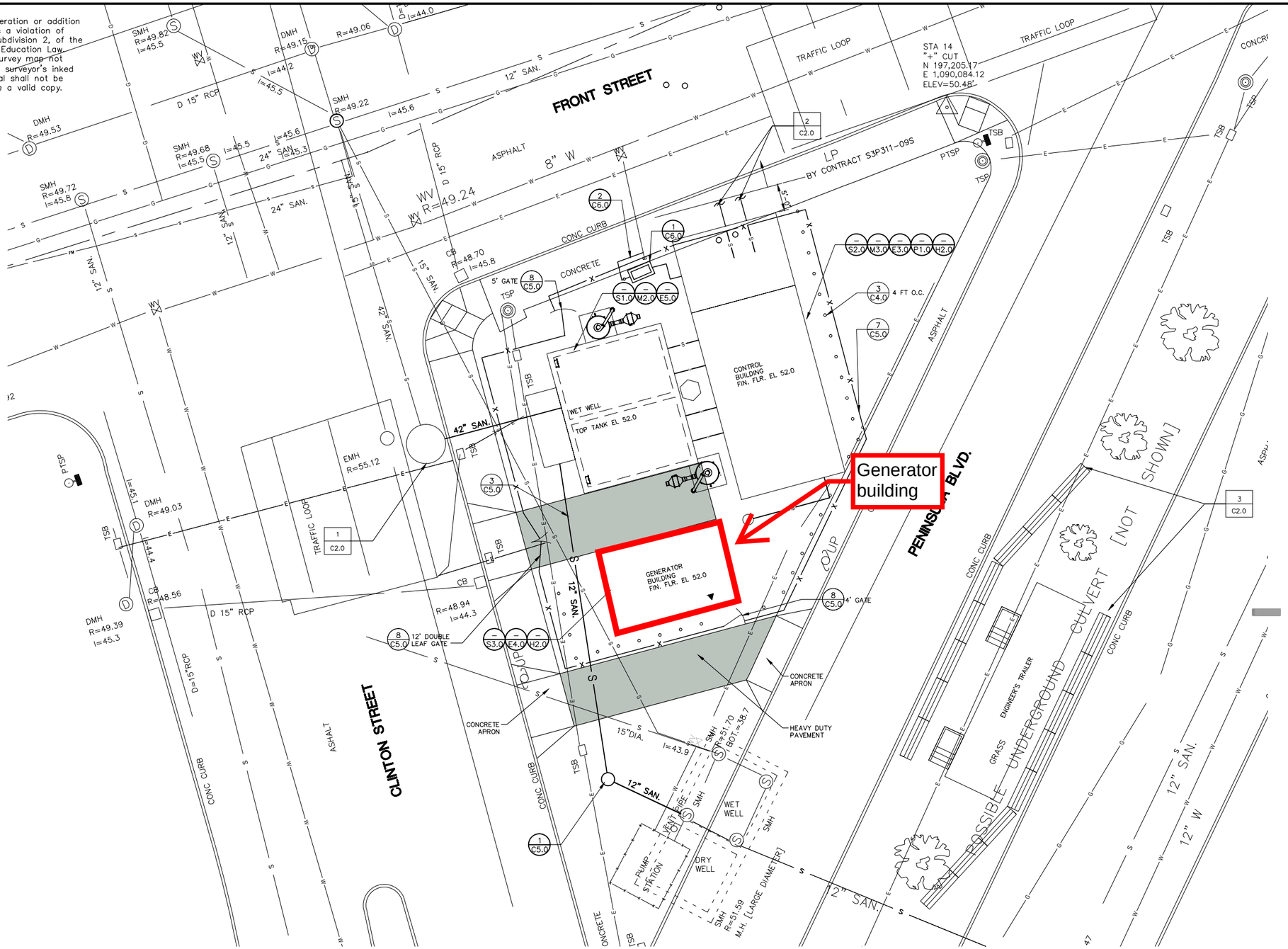

1 **SITE PLAN**

LEGEND

NEW ASPHALT PAVEMENT AND BASE

NOTES:

1. MANHOLE AND UPSTREAM SEWER WORK IS UNDER PROJECT NO. S3P311-09S
2. FORCE MAIN PIPING FROM 5 FEET BEYOND FACE OF CONTROL BUILDING IS WORK UNDER PROJECT NO. S3P311-09S
3. PROVIDE 64 LF PRECAST CONCRETE JERSEY BARRIER ON EACH SIDE OF ENGINEERS TRAILER

Figure 7

New York 811
www.newyork-811.com
- Call Before You Dig
- Wait The Required Time
- Confirm Utility Response
- Respect The Marks
- Dig With Care

1-800-272-4480 or 811

NO.	DATE	REVISION DESCRIPTION	INT.

UNAUTHORIZED ALTERATION OR ADDITION TO THIS DOCUMENT IS A VIOLATION OF SECTION 7209 OF THE NEW YORK STATE EDUCATION LAW.

THESE DOCUMENTS (OR COPIES OF ANY THEREOF) PREPARED BY OR BEARING THE SEAL OF THE ENGINEER, SHALL NOT BE REUSED FOR ANY EXTENSIONS OF THE PROJECT OR ANY OTHER PROJECT WITHOUT THE WRITTEN CONSENT OF THE ENGINEER.

CAMERON ENGINEERING & ASSOCIATES, LLP
100 Sunnyside Boulevard, Suite 100, Woodbury, NY 11797 T: (516) 827-4900
www.Cameronengineering.com CON'T REG:411
IN ASSOCIATION WITH:

PROJECT NAME: NCDPW PROJECT NO. S3P311-09G, HEMPSTEAD WASTEWATER PUMPING STATION

PROJECT LOCATION: VILLAGE OF HEMPSTEAD, NEW YORK

TITLE: HEMPSTEAD PUMPING STATION SITE PLAN AND SITE PIPING PLAN

DISCIPLINE: CIVIL

FINAL REVIEW SUBMISSION

PROJECT ENGINEER: SCH	PROJECT NO. S3P311-09G	DRAWING NO.
DESIGNED BY: SCH	JOB NO. CENA 14-01	C2.0
DRAWN BY: BAC / JIN	DATE: FEB. 2015	DRAWING 6 of 63
CHECKED BY: –	SCALE: AS SHOWN	

PLOT SCALE:N:\cad\CENA\14-01\civil\C2.0 - DIVERSION PUMPING STATION SITE PLAN AND SITE PIPING PLAN T.dwg, Date:March 2, 2015, Plotted by:James M. Vierling

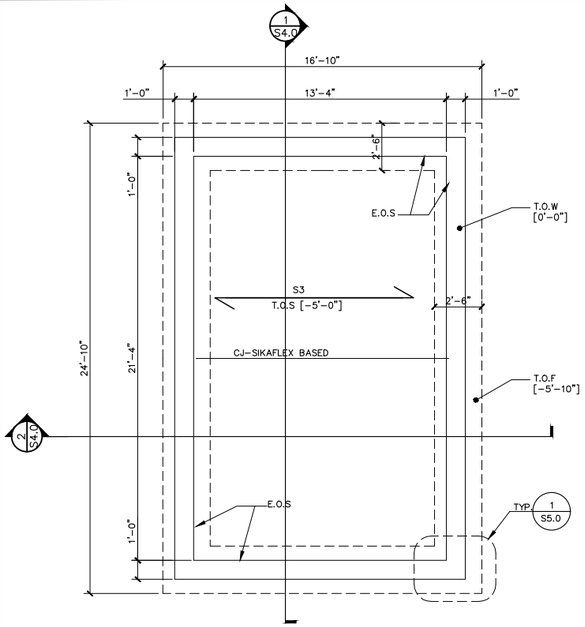

GENERATOR BUILDING FOUNDATION PLAN

SCALE: 1/4"=1'-0"

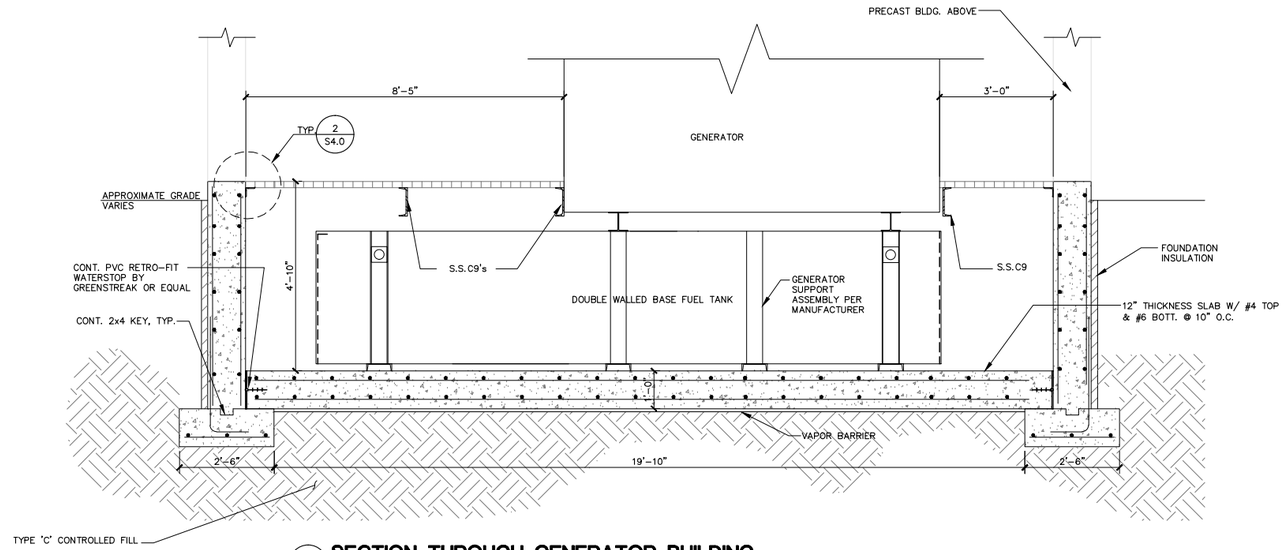

1 SECTION THROUGH GENERATOR BUILDING

SCALE: 1/2"=1'-0"

LEGEND:

S_4 — SPAN OF 'T3320' FRP GRATING BY FIBERGRATE OR APPROVED EQUAL

S_3 — SPAN OF CONCRETE SLAB ON GRADE REINFORCED WITH #5 @ 12" O.C. E.F., E.W.

DIKE CAPACITY:

- INTERIOR DIMENSIONS: 13'4"x21'4"x1'
- CAPACITY: 284.3 CUBIC FEET
- DIESEL FUEL TANK CAPACITY: 1665 GALLONS
  222.6 CUBIC FEET
- 110% FUEL TANK CAPACITY: 244.9 CUBIC FEET

THE SPILL CONTAINMENT CAPACITY OF THE DIKED AREA EXCEEDS 110% OF THE MAXIMUM FUEL TANK CAPACITY.
REQUIRED: 110%
PROPOSED: 127.7%

NOTE:

1. GRATING LAYOUT SHALL BE ESTABLISHED FOLLOWING SHOP DRAWINGS FOR GENERATOR & BASE FUEL TANK FOUND IN ACCORDANCE WITH THE CONTRACT DOCUMENTS.
2. SEE DETAIL 1/E8.0 FOR MORE INFORMATION REGARDING GENERATOR & BASE TANK.

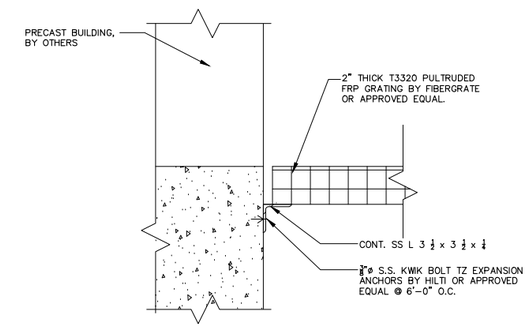

3 GRATING SUPPORT DETAIL

SCALE: N.T.S.

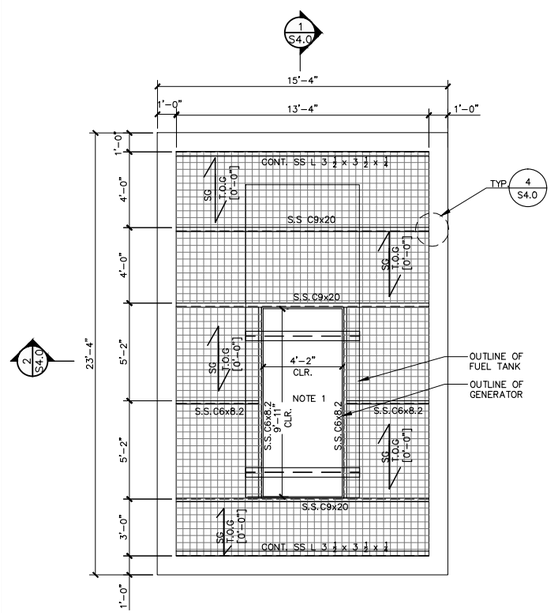

GENERATOR BUILDING GRATING FRAMING PLAN

SCALE: 1/4"=1'-0"

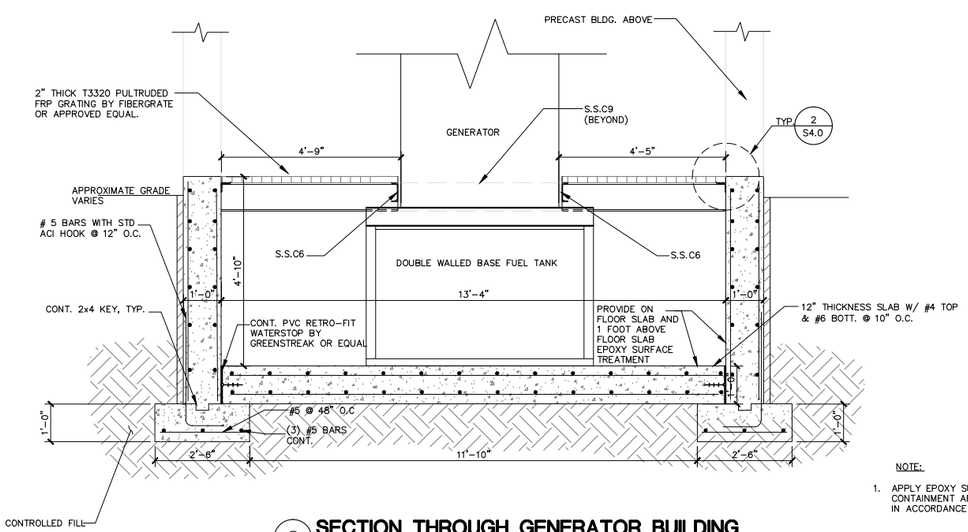

2 SECTION THROUGH GENERATOR BUILDING

SCALE: 1/2"=1'-0"

NOTE:

1. APPLY EPOXY SURFACE TREATMENT TO CONTAINMENT AREA FLOOR SLAB AND WALLS IN ACCORDANCE WITH SECTION 09900.

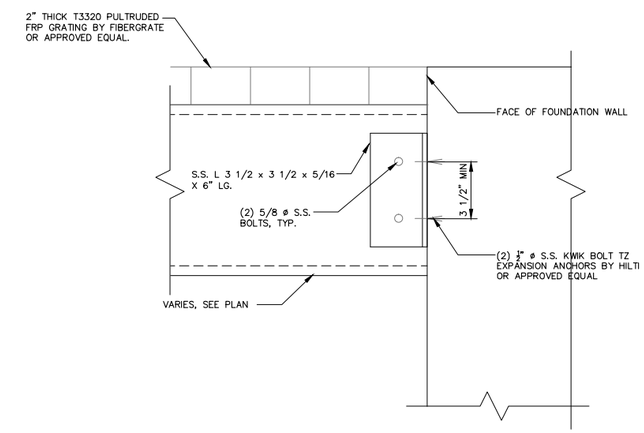

4 CONNECTION DETAIL

SCALE: N.T.S.

Figure 8

NO.	DATE	REVISION DESCRIPTION	INT.

UNAUTHORIZED ALTERATION OR ADDITION TO THIS DOCUMENT IS A VIOLATION OF SECTION 7209 OF THE NEW YORK STATE EDUCATION LAW.

THESE DOCUMENTS (OR COPIES OF ANY THEREOF) PREPARED BY OR BEARING THE SEAL OF THE ENGINEER, SHALL NOT BE REUSED FOR ANY EXTENSIONS OF THE PROJECT OR ANY OTHER PROJECT WITHOUT THE WRITTEN CONSENT OF THE ENGINEER.

CAMERON ENGINEERING & ASSOCIATES, LLP
100 Sunnyside Boulevard, Suite 100, Woodbury, NY 11797
www.Cameronengineering.com
T: (516) 827-4900
COA"s REG 411

IN ASSOCIATION WITH:

PROJECT NAME:
NCDPW PROJECT NO. S3P311-09G, HEMPSTEAD WASTEWATER PUMPING STATION

PROJECT LOCATION:
VILLAGE OF HEMPSTEAD, NEW YORK

TITLE:
HEMPSTEAD PUMPING STATION GENERATOR BUILDING FOUNDATION PLAN

DISCIPLINE:
STRUCTURAL FINAL REVIEW SUBMISSION

PROJECT ENGINEER:	PROJECT NO.	DRAWING NO.
SDL	S3P311-09G	S4.0
DESIGNED BY: BSG	JOB NO. CENA 14-01	DRAWING
DRAWN BY: BSG	DATE: MAR. 2015	18 of 63
CHECKED BY: SDL	SCALE: AS SHOWN	

PLOT SCALE:

May 15, 2015

Thomas J. King, Esq.
Certifying Officer
Governor's Office of Storm Recovery
99 Washington Avenue, Suite 1010
Albany, NY 12231

Dear Mr. King:

The Environmental Protection Agency has reviewed the Environmental Assessment (EA) for the Barnes Avenue Sanitary Sewage Flow Diversion project. In addition we have included our sole source aquifer (SSA) review findings. The EA was prepared by New York State Homes and Community Renewal for the expenditure of U.S. Department of Housing and Urban Development Community Development Block Grant-Disaster Recovery (CDBG-DR) funding. In fulfilling the requirements of the National Environmental Policy Act, the EA document assess the potential environmental effects.

Background:
Sanitary sewer overflows (SSO) have occurred periodically at Barnes Avenue and Third Avenue in Baldwin for more than a decade. The reasons for these events are typically caused by either a surcharge of sewage flow or infiltration of large volumes of stormwater into the sanitary sewer system. During Sandy the existing vulnerabilities in the wastewater collection and treatment system breached the sewer main in leading to Bay Park WPCP. Due to the severity of the resulting event, a state of emergency was declared in the Barnes Avenue neighborhood.

The proposed project involves construction, renovation, and other modifications to the sewer system in the Village of Hempstead necessary to improve the capacity of the wastewater collection system and eliminate sanitary sewer overflows in the Barnes Avenue area of Baldwin, located downstream. The project's rationale is that in order to improve the capacity of the system, a volume of wastewater flow must be diverted to a portion of the system with adequate capacity for conveyance and treatment. The project proposes construction of a new flow diversion pump station adjacent to the existing Weekes Park Pumping Station, renovation of the Newmans Court Pumping Station, and installation of new force main piping under Front Street/Route 102, Ingraham Boulevard, Jerusalem Avenue, Meadowbrook State Parkway, and South Franklin Street to convey the redirected wastewater flow. In total, 17,890 linear feet of force main piping would be installed through a combination of open cut excavation and pipe jacking. Under the proposed configuration, up to 5.85 million gallons per day of wastewater flow would be redirected upstream of Baldwin to the County's Sewer Collection District No. 3 in North Merrick and ultimately treated and discharged from Cedar Creek WPCP.

The EA indicates that the purpose and need of the proposed action is to address the vulnerabilities and capacity limitation in the sewer system by diverting wastewater generated upstream to a portion of the sewer system with adequate capacity for conveyance and treatment.

In addition to improving the resiliency of the local sewer system, the project would improve the capacity of the sewer collection system in the Village of Hempstead to a level necessary to sustain potential future development. The alternatives offered in the document are:

1. No-Action Alternative,
   Dismissed because SSO will continue.
2. Proposed Alternative – Force Main Piping from the Flow Diversion Pumping Station. Three alternative routes were considered for this alternative.

EA Comments:

- The cumulative impacts analysis should consider the environmental impacts of past, present and reasonably foreseeable future actions. The project as a whole, and as one of a number of other proposed and/or approved actions (e.g., Downtown Vision & Comprehensive Development Plan for The Village of Hempstead, Nassau County). In the area that would have the potential to impact the same resources (e.g., amount of pervious surface).

- Stormwater issues should be discussed. The area encounters sewer problems during periods of heavy rainfall.

- EPA understands the purpose and need of providing safe and adequate sewer service in order to alleviate future SSO events. However, there is an additional challenge in ensuring adequate and resilient measures in light of the severity of more frequent storms.

- As this program is Federally funded, it must comply with the New York State air quality implementation plan and therefore requires a general conformity applicability analysis in accordance with 40 CFR 93 Subpart B for any portion of the program that would fall within a nonattainment or maintenance area. The analysis should be completed prior to the start of any work, include all direct emissions that would be anticipated from demolition/construction/renovation activities, and be based on the best planning assumptions available at the time of the analysis. All assumptions and calculations should be presented. If emissions are estimated to be greater than the de minimis levels listed in 40 CFR 93.153(b) for any pollutant or precursor, then a full conformity determination would be required.

- Given the overall amount of construction that may be occurring in Nassau County, we strongly recommended implementation of the following Clean Diesel Program measures:
  - ✓ Strategies and technologies that reduce unnecessary idling, including auxiliary power units, the use of electric equipment, and strict enforcement of idling limits; and
  - ✓ Use of clean diesel through add-on control technologies like diesel particulate filters and diesel oxidation catalysts, repowers, or newer, cleaner equipment.

For more information on diesel emission controls in construction projects, please see: http://www.northeastdiesel.org/pdf/NEDC-Construction-Contract-Spec.pdf

- It is not clear whether consideration was given to the installation of high efficiency pumps which have an improved power factor and of variable frequency drives (VFDs) on the pumps to reduce energy consumption. If the pumps receive variable flows throughout a 24-hour cycle then, they are well suited for VFDs. VFDs can increase system energy efficiency by providing a means to reduce the motor speed of variable torque loads. The energy savings by using VFDs on two five-horsepower pumps running for eight hours a day is estimated at $912 annually. The capital cost for the VFDs is $45,000. http://www.mde.state.md.us/programs/Water/QualityFinancing/Documents/Business%20Case%20Jan%202012.pdf).

- EPA want to make you aware that there are two new rules for new source engines. One of these rules applies to the new generator(s) this project is proposing. In order to learn and comply with these rules you might visit: http://www.epa.gov/region1/rice/.

SSA Comments:

- The project site is located above the Long Island Nassau/Suffolk Aquifer System, designated by EPA as a Sole Source Aquifer on June 21, 1978 (citation 43 FR 26611), and our review has therefore been conducted in accordance with Section 1424(e) of the Safe Drinking Water Act (SDWA).

- In order to mitigate the sanitary sewage overflows (SSOs) that have been occurring on and around Barnes Avenue, a new flow diversion pump station will be constructed next to the existing Weekes Park pump station. *[Barnes Avenue is far south of the pumping station, which is within a triangle formed by Clinton St, Front St and Peninsula Blvd. How will a pumping station so far away from the site of the SSOs be able to relieve the problem there?]* A total of 17,890 feet of piping will be installed under Front St/Route 102, Ingraham Blvd, Jerusalem Ave, Meadowbrook State Parkway and South Franklin St. and will convey up to 5.85 mgd of wastewater upstream from the Hamlet of Baldwin (in the Village of Hempstead) to the wastewater treatment plant that discharges to Cedar Creek.

- Since the project area is relatively close to former spill sites and DEC remedial sites, subsurface soil disturbance will proceed in accord with a Soil Mitigation Plan that would specify procedures for identifying and handling any suspected or unforeseen contaminated soil and insuring its safe transportation and disposal off-site.

- Two dry wells are to be installed on the grounds of the new pumping station, to receive stormwater runoff. However, it is required by Nassau County that the *base* of the dry wells be a minimum of 3 feet above the water table. If the capacity of dry wells having depths that meet that separation requirement is not sufficient, then leaching pools should be considered as an alternative.

- A 1,665-gallon underground storage tank will be installed to store diesel fuel for the emergency generator, which is going to be elevated. Why is an underground rather than

an aboveground tank planned? Will the tank have secondary containment, leak detectors, an overflow alarm, and corrosion protection?

- Fig.3 of the assessment shows the existing and the planned sewer lines crossing a public water line at a point along Jerusalem Avenue, just east of Meadowbrook State Parkway. The vertical distance between a water line and a sewer line must be 18", according to Nassau County regulations.

- We would like to know the planned material of construction of the piping and the nature of the joints to be used.

Based on the information above, the project is not expected to have a significant adverse effect on health or the environment, but we do need the further details indicated above before we can give our final approval.

Thank you for the opportunity to comment. Please refer any questions to Maria R. Clark of my staff at (212) 637-3789 or clark.maria@epa.gov.

Sincerely,

Grace Musumeci, Chief
Environmental Review Section

cc: T.S. Parker, HUD
T. Fretwell, HUD
D. Bradley, NYS EFC

May 20, 2015

Ms. Grace Musemeci
Chief of the Environmental Review Section
U.S. Environmental Protection Agency
Region 2 Main Regional Office
290 Broadway
New York, NY 10007-1866

RE: CDBG-DR Funding Application, Barnes Avenue Sanitary Sewage Flow Diversion Project

Dear Ms. Musemeci:

On April 13, 2015 the New York State Governor's Office of Storm Recovery (GOSR) sent to your office a letter in reference to the above-mentioned project, initiating consultation pursuant to the Memorandum of Understanding ("MOU") between the U.S. Environmental Protection Agency (EPA) and U.S. Department of Housing and Urban Development (HUD) dated August 24, 1990 in furtherance of the requirements of the Safe Drinking Water Act of 1974 (42 U.S.C. 201, 300(f) et seq., and 21 U.S.C. 349) as amended and regulations pertaining to Sole Source Aquifers found at 40 C.F.R. Part 149. On May 15, 2015, EPA responded with comments to the Environmental Assessment (EA) prepared for the above-mentioned project, and also requesting additional information with regard to the Sole Source Aquifer analysis.

The purpose of this letter is to provide EPA with the additional information requested pertaining to the Sole Source Aquifer consultation. GOSR is contemporaneously revisiting the EA associated with above-mentioned project, and will provide such responses under separate cover. We request expedient resolution of the Sole Source Aquifer consultation while we continue to prepare the EA revisions requested by EPA.

(1) EPA states "Barnes Avenue is far south of the pumping station, which is within a triangle formed by Clinton St, Front St and Peninsula Blvd." EPA then asks "How will a pumping station so far away from the site of the SSOs be able to relieve the problem there?" *The location of the proposed Hempstead Wastewater Pumping Station is intended to relieve the sewer system overflows (SSO's) in the Baldwin sewage collection area by diverting approximately half of the existing Village of Hempstead sewage flows to NCDPW's existing Cedar Creek Water Pollution Control Plant (WPCP). This sewage currently flows through the Baldwin sewage collection area. The diversion of flow has been thoughtfully engineered to provide hydraulic and capacity relief in the main interceptor serving the Baldwin sewage collection area.*
(2) EPA states: "Since the project area is relatively close to former spill sites and DEC remedial sites, subsurface soil disturbance will proceed in accord with a Soil Mitigation Plan that would specify procedures for identifying and handling any suspected or unforeseen contaminated soil and insuring its safe transportation and disposal off-site." *This is correct. As required by the EA, and as found in the*

engineering specifications for this project, a soil management plan will be adhered to during all phases of the above-mentioned project.

(3) EPA States: "Two dry wells are to be installed on the grounds of the new pumping station, to receive stormwater runoff. However, it is required by Nassau County that the base of the dry wells be a minimum of 3 feet above the water table. If the capacity of dry wells having depths that meet that separation requirement is not sufficient, then leaching pools should be considered as an alternative." *The effective depth of the proposed two (2) dry wells for stormwater runoff to be installed on the grounds of the new pumping station will be 8' deep. Based on soil borings conducted at the site, the depth to groundwater is approximately 17' to 18' below ground surface. Therefore, the depth of the bottom of the proposed dry wells will be greater than 3 feet above the water table. In addition, the design of the dry wells will incorporate leaching rings.*

(4) EPA States: "A 1,665-gallon underground storage tank will be installed to store diesel fuel for the emergency generator, which is going to be elevated. Why is an underground rather than an aboveground tank planned? Will the tank have secondary containment, leak detectors, an overflow alarm, and corrosion protection?" *The 1,665-gallon diesel fuel storage tank for the emergency generator is being installed underground for aesthetic reasons. The tank will be equipped with secondary containment, leak detectors, an overflow alarm and corrosion protection.*

(5) EPA States: "Fig.3 of the assessment shows the existing and the planned sewer lines crossing a public water line at a point along Jerusalem Avenue, just east of Meadowbrook State Parkway. The vertical distance between a water line and a sewer line must be 18", according to Nassau County regulations." *The vertical distance between the existing public water line and the planned sewer line crossing at a point along Jerusalem Avenue just east of the Meadowbrook State Parkway as shown on Fig 3 of the assessment will be maintained at 18" and in accordance with Nassau County regulations.*

(6) EPA states: "We would like to know the planned material of construction of the piping and the nature of the joints to be used." *The planned material of construction of the piping and nature of joints to be used will be Class 53 ductile iron pipe equipped with mechanical restrained joints, respectively.*

We trust that this will satisfy EPA's May 15, 2015 request for information with regard to the Sole Source Aquifer review. If you or your staff have any questions please do not hesitate to contact me via email at Thomas.King@stormrecovery.ny.gov or by phone at (518) 473-0015.

Sincerely,

Thomas J. King
Assistant General Counsel

UNITED STATES ENVIRONMENTAL PROTECTION AGENCY
REGION 2
290 BROADWAY
NEW YORK, NY 10007-1866

MAY 2 2 2015

Tom King
Assistant General Counsel
Governor's Office of Storm Recovery
99 Washington Avenue Suite 1224
Albany, New York 12260

Re: Sole Source Aquifer Review of Barnes Avenue Sanitary Sewage Flow Diversion Project

Dear Mr. King:

On May 20, 2015, the Environmental Protection Agency (EPA) received your electronic response to its May 15 review letter and e-mail regarding the Barnes Avenue Sanitary Sewage Flow Diversion project. The project is located in the Long Island Nassau/Suffolk Aquifer System, designated by the EPA as a Sole Source Aquifer on June 21, 1978 (citation 43 FR 26611). EPA's May 15 letter/e-mail requested additional information to allow the completion of a sole source aquifer review pursuant to the Safe Drinking Water Act (SDWA).

Based on the additional information provided, the project satisfies the requirements of Section 1424(e) of the SDWA. Please be advised that meeting the requirements of 1424(e) does not preclude the need to meet National Environmental Policy Act (NEPA) requirements to address direct, indirect, and cumulative impacts.

If you have any questions or concerns please feel free to contact Maria R. Clark of my staff at (212) 637-3789 or clark.maria@epa.gov.

Sincerely yours,

Grace Musumeci

Grace Musumeci, Chief,
Environmental Review Section

cc: T.S. Parker, HUD
T. Fretwell, HUD
D. Bradley, NYS EFC

Appendix B – Supplemental Technical Information

Floodplain Management Plan

Floodplain Management Plan

Governor's Office of Storm Recovery

U.S. Department of Housing and Urban Development

Community Development Block Grant – Disaster Recovery

Barnes Avenue Sanitary Sewage Flow Diversion Project
Village of Hempstead, NY

Nassau County, New York

Effective Date: April 28, 2015

Executive Order 11988 – Floodplain Management

Governor's Office of Storm Recovery
U.S. Department of Housing and Urban Development
Community Development Block Grant – Disaster Recovery

Barnes Avenue Sanitary Sewage Flow Diversion Project
Village of Hempstead, NY

Nassau County, New York
Effective Date: April 28, 2015

This Floodplain Management Plan meets the requirements of 24 CFR Part 55.20 and Executive Order 11988—Floodplain Management—for the Barnes Avenue Sanitary Sewage Flow Diversion Project (Project) in the Village of Hempstead, Nassau County, NY. This Floodplain Management Plan documents the eight-step decision making for the Project and pertains to activities within the Special Flood Hazard Area (SFHA) as defined by the Federal Emergency Management Agency (FEMA), or its successors, pursuant to the National Flood Insurance Program (NFIP), or a successor program, whether advisory, preliminary, or final.

Description of Proposed Program Activities

The U.S. Department of Housing and Urban Development (HUD) is responsible for administration of the CDBG-DR program pursuant to the Disaster Relief Appropriations Act of 2013. The CDBG-DR program is designed to address the needs of New York State (NYS) communities devastated by Superstorm Sandy. To date, this funding has been disbursed in three allocations. On Tuesday, March 5, 2013, HUD published Federal Register Notice 78 Fed. Reg. 14329, which established the requirements and processes for the first $1.71 billion in federal CDBG-DR aid appropriated by the United States Congress and allocated to NYS for disaster relief. On November 18, 2013, HUD issued a second allocation of $2.097 billion to NYS under Federal Register Notice 78 Fed. Reg. 69104. On October 16, 2014, HUD issued the third and final allocation of $600 million to NYS under Federal Register Notice 79 Fed. Reg. 62194.

The Governor's Office of Storm Recovery (GOSR) is conducting an evaluation as required by Executive Order 11988 in accordance with HUD regulations under 24 CFR 55.20 Subpart C - Procedures for Making Determinations on Floodplain Management and Protection of Wetlands, to determine the potential effects that Project activity in the floodplain would have on the human environment.

Funding for the Project will be provided by the Clean Water State Revolving Fund Storm Mitigation Loan Program (SMLP) with support from the HUD CDBG-DR program.

Sanitary sewer overflows (SSOs) have occurred periodically at Barnes Avenue and Third Place in Baldwin, in the Town of Hempstead, Nassau County. Sanitary sewer overflow is a condition in which untreated wastewater is discharged into the environment and is typically caused by either a surcharge of sewage flow or infiltration of large volumes of stormwater into the sanitary sewer system. A study commissioned by Nassau County has determined that the most effective way to eliminate the occurrence of SSOs at Barnes Avenue is to reduce the flow in the sewer system upstream of the affected area. Flow can be reduced by diverting wastewater generated

upstream in the Village of Hempstead to a portion of the sewer system with adequate capacity for conveyance and treatment. The proposed redirection of wastewater flow would eliminate the environmental impacts associated with SSO events and improve the resiliency of the wastewater conveyance system.

Though SSOs have occurred periodically in the area of Barnes Avenue for more than a decade, Superstorm Sandy exacerbated the existing vulnerabilities in the wastewater collection and treatment system. The flow diversion Project addresses both the physical vulnerabilities and capacity limitation in the existing sewer system.

The Project proposes construction of a new Flow Diversion Pumping Station adjacent to the existing Weekes Park Pumping Station, renovation of the Newmans Court Pumping Station, and installation of new force main piping under Front Street/Route 102, Ingraham Boulevard, Jerusalem Avenue, Meadowbrook State Parkway, and South Franklin Street to convey the redirected wastewater flow. Under the proposed configuration, up to 5.85 million gallons per day of wastewater flow would be redirected upstream of Baldwin and, subsequently, Bay Park Wastewater Treatment Plant (WWTP), to Cedar Creek WWTP. Cedar Creek WWTP has sufficient capacity to treat the redirected flow. In addition to eliminating SSOs in the Barnes Avenue area and improving wastewater system resiliency, the Project would increase the capacity of the sewer system upstream in the Village of Hempstead to a level sufficient to accommodate potential future development.

Executive Order 11988 & 24 CFR Part 55

Under 24 CFR Part 55.20, an eight-step decision making process must be completed for proposed actions taking place in a floodplain. 24 CFR Part 55.20 implements Executive Order 11988—Floodplain Management. The order requires federal agencies (or a state agency implementing a federal funding program) to reduce the loss of life and property caused by floods, minimize impacts of floods on human safety, health, and welfare, and preserve the natural and beneficial functions of floodplains. Under this order, federal agencies should first look at avoiding all actions in or adversely affecting floodplains unless no practicable alternatives exist. If no practicable alternatives exist, then federal agencies must evaluate the potential effects of the proposed action.

In addition, federal agencies are required to demonstrate that consideration of all practicable alternatives has resulted in the reduction or elimination of the long- and short-term adverse impacts associated with occupancy and modifications of the floodplain. This eight-step process includes assessing all practicable alternatives and incorporating public review.

Projects located within the SFHA are subject to Executive Order 11988. Information on where SFHAs are located is available on Flood Insurance Rate Maps (FIRMs) published by FEMA. FEMA uses engineering studies to determine the delineation of these areas or zones subject to flooding. The relevant data source for the SFHA is the latest issued FEMA data or guidance, which includes advisory data, such as Advisory Base Flood Elevations (ABFEs) or preliminary and final FIRMs.

The SFHA is the area that would be inundated by a 100-year flood: an area that has a one percent or greater chance of experiencing a flood in any single year. SFHAs are shown on FIRMs as shaded areas labeled with the letter “A” or “V”.

- "V" zones are coastal flood hazard zones subject to wave run-up in addition to storm surge.
- "A" zones include all other special flood hazard areas.
- "VE" zones, "AE" zones, "V" zones, or "A" zones followed by a number are areas with specific flood elevations, known as Base Flood Elevations (BFE).
- A zone with the letter "A" or "V" by itself is an appropriately studied flood hazard area without a specific flood elevation.
- Within an "AE" zone or a numbered "A" zone, there may be an area known as the "regulatory floodway," which is the channel of a river and adjacent land areas which must be reserved to discharge a 100-year flood without causing a rise in flood elevations.

24 CFR Part 55.1 (c)

Under 24 CFR Part 55.1 (c), except with respect to actions listed in Part 55.12(c), no HUD financial assistance (including mortgage insurance) may be approved after May 23, 1994 with respect to:

(1) Any action, other than a functionally dependent use, located in a floodway;

(2) Any critical action located in a coastal high hazard area (V zone) (a "critical action" is an action such as storage of volatile materials, irreplaceable record storage, or construction of a hospital or nursing home); or

(3) Any non-critical action located in a coastal high hazard area, unless the action is designed for location in a coastal high hazard area or is a functionally dependent use and complies with the construction standards outlined in HUD Regulations 24 CFR Part 55 (c)(3).

24 CFR Parts 55.11 & 55.20

Under 24 CFR Parts 55.11 (including Table 1) and 55.20, non-critical actions are allowed in A or V zones only if the actions are reviewed in accordance with the floodplain management eight-step decision making process (eight-step process) outlined in 24 CFR Part 55.20. The eight-step process was conducted for the Barnes Avenue Sanitary Sewage Flow Diversion Project and is detailed below.

24 CFR Part 55.20 Eight-Step Process

Step One: Determine whether the proposed action is located in a 100-year floodplain (or a 500-year floodplain for a Critical Action).

The geographic scope for the Barnes Avenue Sanitary Sewage Flow Diversion Project is in the jurisdictional area of Nassau County, covering 4.2 acres, of which 0.02 acres are located in FEMA Zone "A."

The proposed Project location and activities are:

- Weekes Park Pumping Station: construction of a new Flow Diversion Pumping Station, adjacent to the existing Pumping Station at the intersection of Clinton and Front Streets in the Village of Hempstead.

- Newmans Court Pumping Station: improvements to the existing Pumping Station on Newmans Court in the Village of Hempstead.
- Force main, Flow Diversion Pumping Station: installation of new force main to convey wastewater from the new Flow Diversion Pumping Station to existing gravity sewer interceptor located east of the intersection of Jerusalem Avenue and Meadowbrook Parkway. Force main would be installed subsurface beneath Front Street between Clinton Street and Ingraham Boulevard, Ingraham Boulevard between Front Street and Jerusalem Avenue, and Jerusalem Avenue between Ingraham Boulevard and North Jerusalem Road. In the location in which Jerusalem Avenue crosses Meadowbrook Parkway, the force main would be installed by horizontal directional drill (HDD) or pipe jack. In all other locations, force main would be installed via open cut trench.
- Force main, Newmans Court Pumping Station: installation of new force main to transfer additional wastewater from Newmans Court Pumping Station to the Flow Diversion Pumping Station. Force main would be installed subsurface beneath South Franklin Street between Newmans Court and Front Street, and Front Street between South Franklin Street and Clinton Street. Force main to be installed via open cut trench.

Within the Project's geographic scope as outlined above, the floodplain (FEMA Zone "A") only intersects the Project location near the intersection of Jerusalem Avenue and Meadowbrook State Parkway. See **EXHIBIT 1** for a map of the project location and FEMA floodplain.

Step Two: Notify the public at the earliest possible time of a proposal to consider an action in a floodplain (or in the 500-year floodplain for a Critical Action), and involve the affected and interested public in the decision making process.

Because a portion of the Project activities would be located in the floodplain, GOSR must publish an early notice that allows the public an opportunity to provide input into the decision to provide funding for the Project activities in this area.

Once the early public notice and comment period is complete, GOSR will assess, consider, and respond to the comments received individually and collectively for the project file, then proceed to Step Three.

A 15-day "Early Notice and Public Explanation of a Proposed Activity in a 100-Year Floodplain" was published in Newsday Nassau Edition, on March 23, 2015. The 15-day period expired on April 7, 2015. The notice targeted local residents, including those in the floodplain. The notice was also sent to the following state and federal agencies on March 23, 2015: U.S. Department of the Interior (DOI), U.S. Environmental Protection Agency (EPA), U.S. Department of Homeland Security (DHS), U.S Fish and Wildlife Service (FWS); National Park Service (NPS); National Oceanic and Atmospheric Administration (NOAA); NOAA National Marine Fisheries Service (NMFS); U.S. Army Corps of Engineers (USACE); NYS Department Environmental Conservation; the NYS Office of Parks, Recreation and Historic Preservation; NYS Department of Transportation; NYS Office of Emergency Management, and the towns and villages within Nassau County. The notice was also sent to the Town of Hempstead and the office of the Nassau County Executive (see **EXHIBIT 2** for the notice).

GOSR received **3** public comments on this notice. See **EXHIBIT 4** for the comments received.

Step Three: Identify and evaluate practicable alternatives to locating the proposed action in a floodplain (or the 500-year floodplain for a Critical Action).

After a consideration of the following alternatives, Nassau County and GOSR have determined the best practicable alternative is the Proposed Action. The alternative actions considered are as follows: No Action, Alternative Force Main Routings, Parsonage Creek Siphon, Peak Flow Pump Station, Parallel Gravity Line, Storage, Pump Station at Barnes Avenue, and Removal of Manhole at Barnes Avenue.

No Action Alternative

A No Action alternative is not proposed as it does not adequately achieve the goal of promoting a safe and healthy living environment for residents of the Barnes Avenue area. Under the No Action alternative, the identified conveyance and treatment capacity constraints within the sewer system would not be addressed. SSO events would continue to occur in the Barnes Avenue area and the sewer system would continue to be vulnerable in future storm events. The No Action alternative would result in continued negative environmental and health impacts in the area.

Alternative Force Main Routings

Under the proposed alternative, there is a recommended route for the force main required to convey the additional wastewater flow. The following three (3) alternative routes were considered for the force main piping from the Flow Diversion Pumping Station:

- Route 1: Force main would leave the new Flow Diversion Pumping Station onto Front Street (Route 102). Once on Front Street, it would run approximately 13,000 linear feet east to Merrick Avenue, where it would terminate at a gravity sewer interceptor that runs south with the discharge of wastewater at the Cedar Creek Sewage Treatment Plant (STP) for proper treatment. Crossing the Meadowbrook Parkway will require a horizontal directional drill (HDD) or pipe jack of the force main pipe underneath the parkway.
- Route 2: Force main would leave the new Flow Diversion Pumping Station and head southwest on Peninsula Boulevard and then south onto Henry Street to Jerusalem Avenue. The force man would continue east on Jerusalem Avenue and cross under the Meadowbrook Parkway to a manhole located on the eastern side with discharge to an existing 84-inch diameter gravity sewer interceptor to convey the wastewater to the Cedar Creek STP for proper treatment. Crossing the Meadowbrook Parkway will require a horizontal directional drill (HDD) or pipe jack of the force main pipe underneath the parkway.
- Route 3: In this alternative, the force main would leave the new Flow Diversion Pumping Station and head east along Front Street (Route 102) to the intersection of Ingraham Boulevard. The force main would turn south onto Ingraham Boulevard to Jerusalem Avenue and then east on Jerusalem Avenue and cross under the Meadowbrook Parkway to a manhole located on the eastern side with discharge to an existing 84-inch diameter gravity sewer interceptor to convey the wastewater to the Cedar Creek STP for proper treatment. As identified in the Route 2 alternative, crossing the Meadowbrook Parkway will require a horizontal directional drill (HDD) or pipe jack of the force main pipe beneath the parkway.

Route 1 was eliminated because the interceptor located at Front Street and Merrick Avenue is a smaller diameter than the interceptor located at Jerusalem Avenue and Meadowbrook Parkway (terminus of Routes 2 and 3). As a result, Route 1 would not achieve as great a capacity improvement as the other routes. Route 2 was eliminated due to the additional impacts to traffic and utilities associated with force main installation along Henry Street as compared to Ingraham

Boulevard. Route 3 was selected as the recommended route for the force main piping. All alternative routes would also require work in the floodplain.

Parsonage Creek Siphon

The Parsonage Creek Siphon, which conveys wastewater flow under Parsonage Creek in Baldwin, was identified as a point of capacity constriction within the local sewer collection system. The limited hydraulic performance of the siphon may be due to deposits of materials within the siphon and could potentially be improved by regular maintenance and flushing. Work is proposed under a separate project to remedy the hydraulic limitations at the Parsonage Creek Siphon. Though this will likely alleviate one point of hydraulic constriction within the sewer collection system, there are identified capacity deficiencies in the Oceanside sewer collection system, immediately downstream of the Parsonage Creek Siphon. Any increase in flow facilitated by improvements to the siphon would only accelerate surcharging in the Oceanside system, which would in turn slow flow through the siphon and subsequently result in surcharging and SSOs upstream at Barnes Avenue. This alternative would also require work within the floodplain.

Peak Flow Pump Station

A peak flow pump station, which would receive flow only during high flow events, was evaluated. The pump station would transfer flow from Barnes Avenue beneath Parsonage Creek to Oceanside, just downstream in the sewer system, alleviating the hydraulic constriction observed at Parsonage Creek. This alternative would not eliminate SSO events at Barnes Avenue, as the Oceanside sewer system would also be surcharged during any event in which the peak flow pump station is activated. Surcharging downstream would slow flow through the Parsonage Creek Siphon and continue to result in SSOs in the Barnes Avenue area. This alternative would also require work within the floodplain.

Parallel Gravity Line

In an effort to alleviate the observed capacity limitations in the Oceanside sewer system, an alternative including a parallel gravity line downstream of the Parsonage Creek Siphon was considered. The parallel line would be installed adjacent to an existing interceptor underneath Brower Avenue in Oceanside. Just as in the peak flow pump station alternative, this alternative serves to shift the location of surcharging downstream by improving capacity within a limited reach of the sewer system. Downstream surcharging would still occur and would ultimately translate to surcharging upstream as well. This alternative would not eliminate SSO events at Barnes Avenue. This alternative would also require work within the floodplain.

Storage

As capacity in the sewer system is limited only during peak flow events, one possible alternative is to store flow during peak events until system flow has subsided and the stored volume can be safely conveyed by the sewer system. Such an alternative would require a pumping station to transfer flow from the sewer lines into large storage tanks and chambers. A potential site was identified for location of a storage facility, but the amount of storage required for even a short period of time (one hour) is significant. Given the shallow depth to groundwater in the area and the large storage volume required, construction and operational costs were determined to be prohibitive, particularly considering the limited benefit received. This alternative would also require work within the floodplain.

Pump Station at Barnes Avenue

This alternative would construct a pump station in the Barnes Avenue area to connect residences to the sewer collection system, which, unlike the existing gravity connections, would prevent backflow into homes. Though residential backflow is a concern, the primary means of SSO events on Barnes Avenue is through overland flow of wastewater from external components of the sewer system, such as surcharged manholes. A review of local documentation and historical records indicates that there have been no known occurrences of backflow into residences. This alternative would not reduce the flow within the collection system or the potential for SSOs in the Barnes Avenue area. This alternative would also require work within the floodplain.

Removal of Manhole at Barnes Avenue

The manhole on Barnes Avenue and Third Place has been observed to be a common point of discharge during past SSO events. Under this alternative, the manhole would be removed and replaced with a section of pipe between the existing pipe segments. Though this would potentially reduce the occurrence of SSOs at Barnes Avenue, it would not address any of the causes of SSO events and would likely shift the point of SSO occurrence to another location. This alternative would also require work within the floodplain.

These alternatives will be re-evaluated in light of any public comments received.

Step Four: Identify the potential direct and indirect impacts associated with the occupancy or modification of the floodplain (or 500-year floodplain for a Critical Action).

GOSR has evaluated the alternatives to the proposed Project activities in the floodplain, and has determined that the proposed activities must take place in the floodplain.

Given that the proposed Project components located within the floodplain will be located entirely underground and are not susceptible to damage from flooding, there are no direct or indirect impacts anticipated as a result of the Project activities.

Construction activities within the floodplain will be predominantly either HDD or pipe jacking, both of which take place underground and result in a minimum of disturbance and work within the floodplain. Potential impacts from construction activities would be temporary (less than one year) and mitigated through detailed construction staging and traffic plans developed in partnership with the community to minimize disturbance throughout the construction period. Additionally, all Project work areas, including those located in the floodplain, are previously disturbed areas. Work proposed as part of the Project will not disturb or modify the floodplain and appropriate state and federal permits will be obtained.

The proposed Project actions will have a beneficial outcome for the residents of the Barnes Avenue area in Baldwin. Implementation of the Project would eliminate the recurring environmental and health hazards associated with SSOs under existing conditions.

Step Five: Where practicable, design or modify the proposed action to minimize the potential adverse impacts within the floodplain (including the 500-year floodplain for a Critical Action) and to restore and preserve its natural and beneficial values.

As proposed, the Project activities within the floodplain employ minimally invasive technologies such as HDD or pipe jacking and would not disturb or modify the floodplain. This proposed strategy would preserve the existing floodplain and its natural and beneficial values.

Strict requirements for the disposal of debris generated during construction will be in place to prevent, to the extent possible, negative impacts to the floodplain. The handling and disposal of demolition and construction debris, control of stormwater runoff, and noise impacts resulting from Project work would be in accordance with all local and state regulations.

The Project would also implement and maintain erosion and sedimentation control measures to prevent deposition of sediment and eroded soil in on-site and off-site wetlands and waters. Soil compaction would be controlled by minimizing activities in vegetated areas, including lawns. Best management practices (BMPs), such as silt fence and erosion prevention, may be implemented if required by permits or agency discretion. Work in areas of soils with high wind erosion potential may have to occur only during calm weather conditions or include additional watering and other dust suppression mitigation measures. Thorough planning, engineering review, and design, through the local permitting process, would minimize soil erosion and damage to the floodplain that could result from Project activities on sites with marginal soil properties.

Step Six: Reevaluate the proposed action to determine: (1) Whether it is still practicable in light of its exposure to flood hazards in the floodplain, the extent to which it will aggravate the current hazards to other floodplains, and its potential to disrupt floodplain values; and (2) Whether alternatives preliminarily rejected at Step Three are practicable in light of the information gained in Steps Four and Five.

GOSR has reevaluated the proposed action and determined that the Barnes Avenue Sanitary Sewage Flow Diversion Project is still practicable in light of its exposure to flood hazards in the floodplain. As the only Project activity located within the floodplain is installation of subsurface force main through HDD or pipe jacking, the Project would not aggravate current hazards to the floodplain, nor will the Project disrupt floodplain values.

The project team will take the following steps to mitigate the effects of the Project on the floodplain and to preserve natural and beneficial properties of the floodplain:

1) Installation of force main in floodplain will be by either HDD or pipe jacking;
2) Site-specific hazard mitigation measures will be taken, including BMPs to reduce erosion and sedimentation, and proper disposal of debris and demolition and construction waste.

GOSR has also reconsidered the alternatives discussed in Step Three and determined the best practicable alternative is the proposed action. The alternative actions considered are as follows: No Action, Alternative Force Main Routings, Parsonage Creek Siphon, Peak Flow Pump Station, Parallel Gravity Line, Storage, Pump Station at Barnes Avenue, and Removal of Manhole at Barnes Avenue. These alternatives do not meet the goals of the Project, as they do not eliminate the occurrence of SSOs. Furthermore, all evaluated alternatives also require work in the floodplain; therefore there is no practicable alternative to locating the proposed action in the floodplain.

Step Seven: If the reevaluation results in a determination that there is no practicable alternative to locating the proposal in the floodplain (or the 500-year floodplain for a Critical Action), publish a final notice.

It is GOSR's determination that the preferred alternative is the proposed Barnes Avenue Sanitary Sewage Flow Diversion Project. The benefits of the Project would be to reduce the potential of

SSOs at Barnes Avenue, reduce the flow from the Baldwin collection system and increase available storage capacity, and allow for economic revitalization of the area to proceed, providing a long-term regional solution benefitting Baldwin, Hempstead, and East Rockaway.

A 7-day "Notice for Final Public Review of a Proposed Activity in a 100-Year Floodplain" was published in The Hempstead Beacon on April 17, 2015. The 7-day period expired on April 27, 2015. The notice targeted local residents, including those in the floodplain. The notice was also sent to the following state and federal agencies on April 17, 2015: U.S. Department of the Interior (DOI), U.S. Environmental Protection Agency (EPA), U.S. Department of Homeland Security (DHS), U.S Fish and Wildlife Service (FWS); National Park Service (NPS); National Oceanic and Atmospheric Administration (NOAA); NOAA National Marine Fisheries Service (NMFS); U.S. Army Corps of Engineers (USACE); NYS Department Environmental Conservation; the NYS Office of Parks, Recreation and Historic Preservation; NYS Department of Transportation; and NYS Office of Emergency Management. The notice was also sent to the Town of Hempstead, the Village of Hempstead, the office of the Nassau County Executive, and the Office of the Nassau County Clerk. (see **EXHIBIT 3** for the notice).

GOSR received **0** public comments on this notice.

Step Eight: Implement the Action

Step eight is implementation of the proposed action. GOSR will ensure that all mitigation measures prescribed in the steps above will be adhered to. Also, prior to project implementation, GOSR will conduct a National Environmental Policy Act (NEPA) review in accordance with 24 CFR Part 58 and a New York State Environmental Quality Review Act (SEQR) review in accordance with 6 NYCRR Part 617.

EXHIBIT 1 Project Location Floodplain Map

EXHIBIT 2 Copy of Notice Transmitting Notice of Early Public Review and Proof of Publication

EXHIBIT 3 Copy of Notice Transmitting Notice of Final Public Review and Proof of Publication

EXHIBIT 4 Public Comments Received

EXHIBIT 1 Project Location Floodplain Map

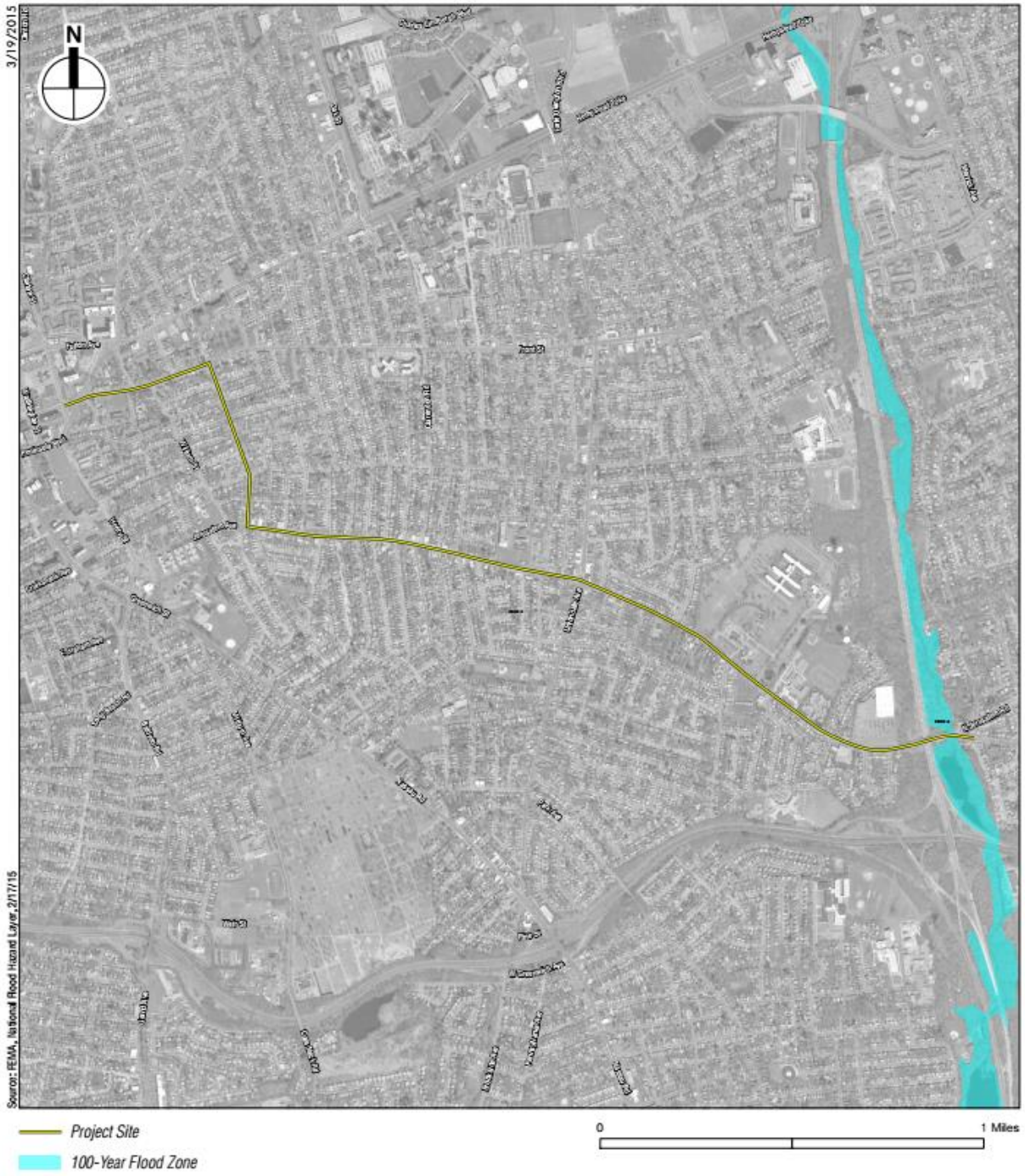

EXHIBIT 2 Copy of Notice Transmitting Notice of Early Public Review and Proof of Publication

EARLY NOTICE AND PUBLIC EXPLANATION OF A PROPOSED ACTIVITY IN A 100-YEAR FLOODPLAIN

BARNES AVENUE SANITARY SEWAGE FLOW DIVERSION PROJECT VILLAGE OF HEMPSTEAD, NY

Thomas King, Assistant General Counsel and Certifying Officer
Governor's Office of Storm Recovery
99 Washington Avenue, Suite 1224
Albany, NY 12260

NOTIFICATION OF ACTIVITY IN A FLOODPLAIN

To: All interested Agencies, Groups, and Individuals

This is to give notice that the Governor's Office of Storm Recovery (GOSR) is conducting an evaluation as required by Executive Order 11988 in accordance with U.S. Department of Housing and Urban Renewal (HUD) regulations under 24 CFR 55.20 Subpart C - Procedures for Making Determinations on Floodplain Management and Protection of Wetlands, to determine the potential effects that its activity in the floodplain would have on the human environment.

Sanitary sewer overflows (SSOs) have occurred periodically at Barnes Avenue and Third Avenue in Baldwin, in the Town of Hempstead, Nassau County. Sanitary sewer overflow is a condition in which untreated wastewater is discharged into the environment and is typically caused by either a surcharge of sewage flow or infiltration of large volumes of stormwater into the sanitary sewer system. Though SSOs have occurred periodically in the area of Barnes Avenue for more than a decade, Superstorm Sandy exacerbated the existing vulnerabilities in the wastewater collection and treatment system. The flow diversion project proposed herein addresses the vulnerabilities and capacity limitation in the sewer system by diverting wastewater generated upstream to a portion of the sewer system with adequate capacity for conveyance and treatment.

The project proposes construction of a new flow diversion pump station adjacent to the existing Weekes Park Pumping Station, renovation of the Newmans Court Pumping Station, and installation of new force main piping under Front Street/Route 102, Ingraham Boulevard, Jerusalem Avenue, Meadowbrook State Parkway, and South Franklin Street to convey the redirected wastewater flow. Under the proposed configuration, up to 5.85 million gallons per day of wastewater flow would be redirected upstream of Baldwin and, subsequently, Bay Park Wastewater Treatment Plant (WWTP), to Cedar Creek WWTP.

Funding for the project will be provided by the Clean Water State Revolving Fund Storm Mitigation Loan Program (SMLP) with support from the HUD Community Development Block Grant – Disaster Recovery (CDBG-DR) program for storm recovery activities in New York State.

A floodplains map based on the FEMA Base Flood Elevation Maps, has been prepared for this project and is available for review at **http://www.stormrecovery.ny.gov/environmental-docs**

There are three primary purposes for this notice. First, people who may be affected by activities in floodplains and those who have an interest in the protection of the natural environment should be given an opportunity to express their concerns and provide information about these areas. Second, adequate public notice is an important public education tool. The dissemination of information about floodplains facilitates and enhances Federal efforts to reduce the risks associated with the occupancy and modification of these special areas. Third, as a matter of fairness, when the Federal government determines it will participate in actions taking place in floodplains, it must inform those who may be put at greater or continued risk.

PUBLIC COMMENTS

Any individual, group, or agency may submit written comments on the proposed action or a request for further information to Thomas King, Assistant General Counsel and Certifying Officer, Governor's Office of Storm Recovery, 99 Washington Avenue, Suite 1224, Albany, NY 12260; email: NYSCDBG_DR_ER@nyshcr.org. All comments received by **April 7, 2015** will be considered.

Thomas King, Assistant General Counsel and Certifying Officer

March 23, 2015

NEWSDAY
AFFIDAVIT OF PUBLICATION

SKY ADVERTISING
14 EAST 33RD STREET, 8TH FLOOR
NEW YORK, NY 10016-5013

STATE OF NEW YORK) Legal Notice No. 0021068172
:SS.:
COUNTY OF SUFFOLK)

R. Lopes of Newsday Media Group., Suffolk County, N.Y., being duly sworn, says that such person is, and at the time of publication of the annexed Notice was a duly authorized custodian of records of Newsday Media Group, the publisher of NEWSDAY, a newspaper published in the County of Suffolk, County of Nassau, County of Queens, and elsewhere in the State of New York and other places, and that the Notice of which the annexed is a true copy, was published in the following editions/counties of said newspaper on the following dates:

Monday March 23, 2015 Nassau

SWORN to before me this
24 Day of March, 2015.

Guy P. Wasser
Notary Public, State of New York
No. 01WA6045924
Commission Expires 10/20/2018
Qualified in Suffolk County

Legal Notice # 21063970
Notice of formation of DJI Land II, LLC. Articles of Organization filed with the Secretary of State of New York SSNY on November 21, 2014. Office location in Nassau. SSNY has been designated for service of process. SSNY shall mail copy of any process served against the LLC at 1750 Plaza Ave, New Hyde Park, NY 11040. Purpose: any lawful purpose.

Legal Notice # 21064071
Notice of formation of Property Professionals USA, LLC. Arts of Org filed with the Secretary of State of New York on 12/16/14.Office location in Nassau county. SSNY has been designated for service of process. SSNY shall mail copy of process to the LLC: 479 South Broadway - Hicksville, NY 11801.Purpose: any lawful purpose.

Legal Notice # 21065977
3G Eileen Way LLC. Arts. of Org. filed with SSNY on 01/29/15. Off. Loc.: Nassau Co. SSNY desig. as agt. upon whom process may be served. SSNY shall mail process to: Mark Grgas, c/o United Air Conditioning, 27-20 Skillman Ave., LIC, NY 11101. General Purposes.

Legal Notice # 21065997
Global Creations LLC. Arts. of Org. filed with SSNY on 02/26/15. Off. Loc.: Nassau Co. SSNY desig. as agt. upon whom process may be served. SSNY shall mail process to: The LLC, P.O. Box 1359, NY, NY 10018. General Purposes.

Legal Notice # 21066074
1821 Grove Street LLC. Arts. of Org. filed with SSNY on 12/04/14. Off. Loc.: Nassau Co. SSNY desig. as agt. upon whom process may be served. SSNY shall mail process to: The LLC, 12 22nd St., Jericho, NY 11753. General Purposes.

Legal 2108817201

Legal Notice # 21062454
LM SASS LLC, a domestic LLC, filed with the SSNY on 2/24/15. Office location: Nassau County. SSNY is designated as agent upon whom process against the LLC may be served. SSNY shall mail process to The LLC, c/o Barbara R. Sass, 60 Astor Ln., Sands Point, NY 11050. General Purposes.

Legal Notice # 21062481
OXFORD MECHANICAL LLC, a domestic LLC, filed with the SSNY on 2/10/15. Office location: Nassau County. SSNY is designated as agent upon whom process against the LLC may be served. SSNY shall mail process to The LLC, 182 Park Ave., Williston Park, NY 11596. General Purposes.

Legal Notice # 21068551
NOTICE TO BIDDERS
SEALED PROPOSALS WILL BE PUBLICLY OPENED AND READ BY THE ASSISTANT SUPERINTENDENT FOR FINANCE & OPERATIONS OF THE BOARD OF EDUCATION, SEWANHAKA CENTRAL HIGH SCHOOL DISTRICT OF THE TOWNS OF HEMPSTEAD AND NORTH HEMPSTEAD AT THE CENTRAL ADMINISTRATIVE OFFICES, 77 LANDAU AVENUE, FLORAL PARK, N.Y. 11001 FOR:

Automotive &:
Light Truck Parts
Custodial Supplies
Electrical Supplies
General Office &
School Supplies
Uniforms for Custodial and Security Staff

April 16, 2015 @ 2:00 pm
COPIES OF SPECIFICATIONS AND CONDITIONS MAY BE OBTAINED AT THE BUSINESS OFFICE, ADDRESS ABOVE
ELEANOR MOORE
DISTRICT CLERK

Legal Notice # 21068577
A - NOTICE TO BIDDERS
SEALED PROPOSALS WILL BE RECEIVED by the Commissioner of General Services, c/o Division of Public Works, Town of Hempstead, Town Hall, Room 211, 350 Front St., Hempstead, New York, until 11:00 A.M. prevailing time on April 2, 2015 at which time they shall be publicly opened and read aloud and the contract awarded as soon thereafter as may be practicable for:
Storm Water Drain & Road Improvement Tinker Drive - Chance Drive Area Oceanside, Town of Hempstead, Nassau County, New York.
PW # 22-15.
A - 1 A fee of $100.00 (Check only) will be required for all bidders for a copy of the Proposed Contract Documents.
A - 2 Each proposal must be accompanied by a Certified Check or Bid Bond payable to the Town of Hempstead for not less than 5% of the estimated amount of the bid.
A - 3 Bid documents may be OBTAINED IN PERSON ONLY AT THE OFFICE of THE COMMISSIONER of GENERAL SERVICES, c/o DIVISION of PUBLIC WORKS, TOWN HALL, ROOM 211, HEMPSTEAD, N.Y. AND MAY BE SEEN AT THE SAME OFFICE.
A - 4 Federal Equal Opportunity and Labor Standards are applicable for all work performed under this contract.
A - 5 The Town of Hempstead reserves the right to reject any or all bids.
Dated: March 23, 2015
HEMPSTEAD, NEW YORK
KATHLEEN P. MURRAY
Supervisor
Nasrin G. Ahmad
Town Clerk
STEPHEN D'ESPOSITO
Commissioner
Department of
General Services

Legal Notice # 21064582
Happiness Realty LLC. Arts of Org filed with SSNY on 02/02/15. Office Loc: Nassau County. SSNY designated as agent of LLC upon whom process against it may be served. SSNY shall mail a copy of process to: The LLC, 8 Waldo Ave., Greenvale, NY 11548. Purpose: to engage in any lawful act.

Legal Notice # 21068495
NOTICE TO BIDDERS: SEALED BIDS ARE REQUESTED BY THE BOARD OF COOPERATIVE EDUCATIONAL SERVICES OF NASSAU COUNTY, NEW YORK AND THOSE PARTICIPATING DISTRICTS OR MUNICIPALITIES WHO HAVE OR MAY JOIN THESE COOPERATIVES FOR:
BID # 15/16-012 - FOOD SERVICE EQUIPMENT TO BE OPENED ON APRIL 15, 2015, AT 2:00 P.M.
SPECIFICATIONS MAY BE OBTAINED BY REGISTERING ONLINE IN THE CO-OP BIDDING-VENDORS SECTION UNDER ONLINE SERVICES AT www.nassauboces.org, OR AT THE BOARD OF COOPERATIVE EDUCATIONAL SERVICES OF NASSAU COUNTY, GEORGE FARBER ADMINISTRATIVE CENTER, BUSINESS SERVICES DEPARTMENT, 71 CLINTON ROAD, GARDEN CITY, NEW YORK 11530 (516) 396-2240 UNTIL THE ABOVE DATE, AT WHICH TIME THEY WILL BE PUBLICLY OPENED.
BY ORDER OF: BOARD OF COOPERATIVE EDUCATIONAL SERVICES OF NASSAU COUNTY.
Michael R. Perina
Purchasing Agent

Legal Notice # 21066022
Amirian Equities LLC. Arts. of Org. filed with SSNY on 09/18/08. Off. Loc.: Nassau Co. SSNY desig. as agt. upon whom process may be served. The latest date to dissolve is 12/31/2108. SSNY shall mail process to: The LLC, 10 Eagle Point Dr., Great Neck, NY 11024. General Purposes.

Legal Notice # 21068517
NOTICE TO BIDDERS: SEALED BIDS ARE REQUESTED BY THE BOARD OF COOPERATIVE EDUCATIONAL SERVICES OF NASSAU COUNTY, NEW YORK AND THOSE PARTICIPATING DISTRICTS OR MUNICIPALITIES WHO HAVE OR MAY JOIN THESE COOPERATIVES FOR:
BID # 15/16-008 - PLUMBING AND HEATING SUPPLIES TO BE OPENED ON APRIL 13, 2015, AT 2:00 P.M.
SPECIFICATIONS MAY BE OBTAINED BY REGISTERING ONLINE IN THE CO-OP BIDDING-VENDORS SECTION UNDER ONLINE SERVICES AT www.nassauboces.org, OR AT THE BOARD OF COOPERATIVE EDUCATIONAL SERVICES OF NASSAU COUNTY, GEORGE FARBER ADMINISTRATIVE CENTER, BUSINESS SERVICES DEPARTMENT, 71 CLINTON ROAD, GARDEN CITY, NEW YORK 11530 (516) 396-2240 UNTIL THE ABOVE DATE, AT WHICH TIME THEY WILL BE PUBLICLY OPENED.
BY ORDER OF: BOARD OF COOPERATIVE EDUCATIONAL SERVICES OF NASSAU COUNTY.
Michael R. Perina
Purchasing Agent

Legal Notice # 21066005
Carey Ngai Consulting Engineer PLLC. Arts. of Org. filed with SSNY on 02/20/15. Off. Loc.: Nassau Co. SSNY desig. as agt. upon whom process may be served. SSNY shall mail process to: The LLC, 30 Park West, New Hyde Park, NY 11040. Purpose: Engineering.

Legal Notice # 21068515
NOTICE TO BIDDERS: SEALED BIDS ARE REQUESTED BY THE BOARD OF COOPERATIVE EDUCATIONAL SERVICES OF NASSAU COUNTY, NEW YORK FOR THE FOLLOWING
BID# 15/16-007 - TOYS AND BOOKS FOR THE PARENT/CHILD HOME PROGRAM
TO BE OPENED ON APRIL 14, 2015 AT 2:00 P.M.
SPECIFICATIONS MAY BE OBTAINED BY REGISTERING ONLINE IN THE CO-OP BIDDING-VENDORS SECTION UNDER ONLINE SERVICES AT www.nassauboces.org, OR AT THE BOARD OF COOPERATIVE EDUCATIONAL SERVICES OF NASSAU COUNTY, GEORGE FARBER ADMINISTRATIVE CENTER, DEPARTMENT OF BUSINESS SERVICES, 71 CLINTON ROAD, GARDEN CITY, NY 11530 (516) 396-2240 UNTIL THE ABOVE DATE, AT WHICH TIME THEY WILL BE PUBLICLY OPENED.
BY ORDER OF: THE BOARD OF COOPERATIVE EDUCATIONAL SERVICES OF NASSAU COUNTY.
Michael R. R. Perina
Purchasing Agent

DID YOU KNOW THAT YOU CAN SEE NEWSDAY'S BUY & SELL ADS ON THE INTERNET?
www.newsday.com/classifieds

Legal Notice # 21064483
NOTICE TO BIDDERS
Pursuant to resolution adopted by the Town Board, The Town of Babylon, Commissioner of General Services, Division of Purchasing, will receive sealed proposals for:
RFP NO. 15031
REQUEST FOR PROPOSALS
TECHNICAL, CONSULTING, SURVEYING, ENGINEERING, DESIGN, CONSTRUCTION ADMINSTRATION & CONSTRUCTION INSPECTION, ETC.
SERVICES FOR THE CONSTRUCTION OF AMERICAN VENICE BRIDGES, COPIAGUE, NEW YORK
until 10:00 am on THURSDAY, APRIL 9, 2015 at the Town Hall, 200 East Sunrise Highway, Lindenhurst, New York, 11757 at which time they will be publicly opened and read in the Division of Purchasing office.
One (1) original and Eight (8) copies of both the technical and cost proposals. The Technical and Cost Proposals shall be in separate sealed containers and may be hand delivered or mailed to the above address. Proposals will not be accepted after 10:00 am on the date of bid opening. NO EXCEPTIONS WILL BE GRANTED. Do not remove any pages; all proposals are to be submitted intact. For information call (631) 957-3025. The Town reserves the right to reject any and all proposals.
Proposal documents may be examined and obtained at the Town Hall Purchasing Department between the hours of 9:00 a.m. and 4:30 p.m. daily except Saturdays, Sundays and Holidays, on and after MONDAY, MARCH 9, 2015. Proposal documents may also be downloaded at the Town of Babylon's website at www.townofbabylon.com

SPECIAL NOTE: These projects shall be funded in part through the New York State Governor's Office of Storm Recovery - Disaster Recovery and Federal Funds through Community Development Block Grants. Proposers must comply with any and all funding agency requirements, as well as any other State, County Town or local government or agency rules and regulations. A goal of 15% for New York State Certified Minority Business and 15% for New York State Certified Women Owned Business has been established for this project. Proposers must demonstrate their good-faith efforts to achieve these goals.
The Town will not reimburse any individual or firm with any costs associated with the preparation of their proposal.
The Town of Babylon encourages minority and women owned businesses to participate in all bids.
The Town reserves the right to reject any or all bids.
Theress Sabatino
Commissioner of
General Services
Date: March 9, 2015.

Legal Notice # 21068599
NOTICE TO BIDDERS
PLEASE TAKE NOTICE that the Town of Oyster Bay, Nassau County, State of New York invites Sealed Proposals with respect to the award of:
REPLACEMENT OF EXISTING TIMBER BULKHEAD & DRAINAGE IMPROVEMENTS AT SENECA PLACE
MASSAPEQUA, NEW YORK
CONTRACT NO. H14-122
BID NO. PW025-15
Said proposals are to be received and stamped by the Division of Purchase and Supply of the Town of Oyster Bay at Town Hall West, 74 Audrey Avenue, 4TH Floor, Oyster Bay, New York, 11771-1592, not later than 11:00 a.m., prevailing time on Wednesday, April 8th, 2015, and, immediately thereafter, all proposals will be publicly opened and read in the area as designated at Town Hall.
Contract documents are available for review and procurement at the Division of Purchase and Supply of the Town of Oyster Bay at Town Hall West, 74 Audrey Avenue, 4TH Floor, Oyster Bay, New York, 11771-1592, on or after Monday, March 23rd, 2015, between the hours 9:00 a.m. and 4:45 p.m., on regular business days, Monday through Friday. A charge of Fifty Dollars ($50.00) payable to the Town of Oyster Bay, non-refundable, will be required for the set of contract documents. In submitting a proposal hereunder, a Contractor is required to comply with all applicable provisions of Federal, State and Local Laws.
In accordance with Town policy, the Contractor on this project must have an Apprenticeship program(s) in effect at the time of bid opening, appropriate for the type and scope of work to be performed, approved by the New York State Commissioner of Labor. The bidder shall submit proof of participation in an Apprenticeship program(s) within five (5) business days of bid opening. Failure to have said Apprenticeship Program(s) in place will result in the bidder being deemed non-responsive.
In accordance with Section 220 of the New York Labor Law, all public works contracts in excess of $250,000.00 require that all laborers, workers and mechanics working on the site be certified as having successfully completed the OSHA 10-hour construction safety and health course.
Subject to the foregoing, the availability of funds, and prevailing lawful requirements, the Town will award the contract to the lowest responsible qualified bidder. BY ORDER OF THE TOWN BOARD OF THE TOWN OF OYSTER BAY. JOHN VENDITTO, Supervisor; James Altadonna, Jr., Town Clerk; Richard T. Betz, Commissioner of the Department of Public Works.
Dated: March 17, 2015,
Oyster Bay, New York.

NEWSDAY BUY & SELL
Read for savings
Advertise for results!!
631-843-7653(SOLD)

Legal Notice # 21068565
NOTICE TO BIDDERS
SEALED BIDS will be received by the Department of Public Works of the Town of North Hempstead in the Town Board Room located on the second floor of the Town Hall, 220 Plandome Road, Manhasset, New York 11030 on Wednesday April 8, 2015 at 10:30 a.m., at which time they will be publicly opened and read and the Contract awarded as soon thereafter as practicable for:
ON-CALL SERVICES FOR MILLING, PAVING AND MISCELLANEOUS CONCRETE WORK ON VARIOUS TOWN ROADWAYS
DPW PROJECT NO. 15-05
Bids may be mailed or delivered to the Town Clerk, 200 Plandome Road, Manhasset, New York 11030, provided the Bid is actually received by the Town Clerk prior to the time of public opening; or Bids may be delivered to the place of public opening (i.e., the Town Board Room) immediately prior to the time of public opening.
All Bids must be sealed and submitted in the pre-marked envelope provided with the Bid Documents, or must be sealed and submitted in a package (envelope) MARKED IN THE SAME WAY as the pre-marked envelope provided with the Bid Documents.
All BIDDERS MUST complete the required Contractor's Qualifications Statement and must provide a copy of the required Statement of Financial Conditions, even if a Bidder is currently executing work for the Town.
The Bids shall be in accordance with the requirements of the Specifications, Contract Plans and terms of the proposed Contract.
No bids shall be received unless made in writing on forms furnished, and unless accompanied by a Certified Check or Bid Bond made payable to the Town of North Hempstead for an amount not less than five (5%) percent of the Bid price.
BIDDERS ARE HEREBY ADVISED THAT ALL BONDS AND INSURANCE DOCUMENTS SUBMITTED WILL BE VERIFIED FOR AUTHENTICITY BY DIRECT COMMUNICATION WITH THE SURETY/INSURANCE COMPANY.
ALL BONDING AND INSURANCE COMPANIES MUST BE LICENSED TO DO BUSINESS IN THE STATE OF NEW YORK.
The Town reserves the right to reject any and all Bids, and to waive any informalities therein.
All bidders are required to submit proof of participation in apprentice training programs which have been registered and approved by the New York State Department of Labor for the trades participating in the work to be performed.
The Town will not accept Bids from, nor award a Contract to, anyone who cannot prove to the satisfaction of the Town Board that he has sufficient experience in this type of construction and financially able and organized to successfully carry out the work covered by the Plans and Specifications in the required completion time. Special qualification requirements are contained in the Contract Documents.
Contract Plans, Specifications, and other Contract Documents may be examined at the office of the Department of Public Works, Town of North Hempstead, 285 Denton Avenue, New Hyde Park, New York 11040, or at the office of the Town Clerk at Town Hall, 200 Plandome Road, Manhasset, New York 11030 on and after Monday March 23, 2015. On and after this date, copies may be purchased only at the office of the Town Clerk.
Bidders should note that, pursuant to New York General Municipal Law §103(16), the contract that may be awarded pursuant to the specifications for this bid may be utilized by any governmental entity in New York State, subject to the provisions contained in the Bid Documents.
A deposit of $50.00 is required for each set of Plans and Specifications. The deposit shall be in cash or certified check in the name of the Town of North Hempstead. The deposit of each bidder will be refunded for return of one set, in good condition, within thirty days following the Award of Contract or within sixty days following the opening of bids if no Contract is awarded. All other deposits will be refunded on the basis of fifty (50%) percent of the deposit amount for sets returned in good condition within the same period. Sets are to be returned to the office of the Town Clerk at the above address for full or partial deposit refund.
BY ORDER OF
THE TOWN BOARD
OF THE TOWN
OF NORTH HEMPSTEAD
WAYNE H. WINK, JR.,
TOWN CLERK
PAUL DIMARIA, P.E.
COMMISSIONER PUBLIC WORKS

Legal Notice # 21068473
NOTICE TO BIDDERS
SEALED BIDS will be received by the Department of Public Works of the Town of North Hempstead in the Town Board Room located on the second floor of the Town Hall, 220 Plandome Road, Manhasset, New York 11030 on Wednesday April 8, 2015 at 10:30 a.m., at which time they will be publicly opened and read and the Contract awarded as soon thereafter as practicable for:
ROOF REPLACEMENT PROJECT
CLARK HOUSE AT CLARK BOTANIC GARDEN
ALBERTSON, NY
DPW PROJECT NO. 14-02
Bids may be mailed or delivered to the Town Clerk, 200 Plandome Road, Manhasset, New York 11030, provided the Bid is actually received by the Town Clerk prior to the time of public opening; or Bids may be delivered to the place of public opening (i.e., the Town Board Room) immediately prior to the time of public opening.
All Bids must be sealed and submitted in the pre-marked envelope provided with the Bid Documents, or must be sealed and submitted in a package (envelope) MARKED IN THE SAME WAY as the pre-marked envelope provided with the Bid Documents.
All BIDDERS MUST complete the required Contractor's Qualifications Statement and must provide a copy of the required Statement of Financial Conditions, even if a Bidder is currently executing work for the Town.
The Bids shall be in accordance with the requirements of the Specifications, Contract Plans and terms of the proposed Contract.
No bids shall be received unless made in writing on forms furnished, and unless accompanied by a Certified Check or Bid Bond made payable to the Town of North Hempstead for an amount not less than five (5%) percent of the Bid price.
BIDDERS ARE HEREBY ADVISED THAT ALL BONDS AND INSURANCE DOCUMENTS SUBMITTED WILL BE VERIFIED FOR AUTHENTICITY BY DIRECT COMMUNICATION WITH THE SURETY/INSURANCE COMPANY.
ALL BONDING AND INSURANCE COMPANIES MUST BE LICENSED TO DO BUSINESS IN THE STATE OF NEW YORK.
The Town reserves the right to reject any and all Bids, and to waive any informalities therein.
All bidders are required to submit proof of participation in apprentice training programs which have been registered and approved by the New York State Department of Labor for the trades participating in the work to be performed.
There will be a Pre-Bid Meeting held at 10:00 AM, on Friday, March 27, 2015 at the project site: Clark Botanical Garden, 193 I.U. Willets Road, Albertson, NY 11507. It is strongly suggested that all prospective bidders attend this meeting.
The Town will not accept Bids from, nor award a Contract to, anyone who cannot prove to the satisfaction of the Town Board that he has sufficient experience in this type of construction and financially able and organized to successfully carry out the work covered by the Plans and Specifications in the required completion time. Special qualification requirements are contained in the Contract Documents.
Contract Plans, Specifications, and other Contract Documents may be examined at the office of the Department of Public Works, Town of North Hempstead, 285 Denton Avenue, New Hyde Park, New York 11040, or at the office of the Town Clerk at Town Hall, 200 Plandome Road, Manhasset, New York 11030, on and after Monday March 23, 2015. On and after this date, copies may be purchased only at the office of the Town Clerk.
A deposit of $50.00 is required for each set of Plans and Specifications. The deposit shall be in cash or certified check in the name of the Town of North Hempstead. The deposit of each bidder will be refunded for return of one set, in good condition, within thirty days following the Award of Contract or within sixty days following the opening of bids if no Contract is awarded. All other deposits will be refunded on the basis of fifty (50%) percent of the deposit amount for sets returned in good condition within the same period. Sets are to be returned to the office of the Town Clerk at the above address for full or partial deposit refund.
BY ORDER OF
THE TOWN BOARD
OF THE TOWN OF NORTH HEMPSTEAD
WAYNE H. WINK, JR.,
TOWN CLERK
PAUL DIMARIA, P.E.
COMMISSIONER PUBLIC WORKS

EARLY NOTICE AND PUBLIC EXPLANATION OF A PROPOSED ACTIVITY IN A 100-YEAR FLOODPLAIN

BARNES AVENUE SANITARY SEWAGE FLOW DIVERSION PROJECT
VILLAGE OF HEMPSTEAD, NY

Thomas King, Assistant General Counsel and Certifying Officer
Governor's Office of Storm Recovery
99 Washington Avenue; Suite 1224
Albany, NY 12231

NOTIFICATION OF ACTIVITY IN A FLOODPLAIN

To: All Interested Agencies, Groups, and Individuals

This is to give notice that the Governor's Office of Storm Recovery (GOSR) is conducting an evaluation as required by Executive Order 11988 in accordance with U.S. Department of Housing and Urban Renewal (HUD) regulations under 24 CFR 55.20 Subpart C - Procedures for Making Determinations on Floodplain Management and Protection of Wetlands, to determine the potential effects that its activity in the floodplain would have on the human environment.

Sanitary sewer overflows (SSOs) have occurred periodically at Barnes Avenue and Third Avenue in Baldwin, in the Town of Hempstead, Nassau County. Sanitary sewer overflow is a condition in which untreated wastewater is discharged into the environment and is typically caused by either a surcharge of sewage flow or infiltration of large volumes of stormwater into the sanitary sewer system. Though SSOs have occurred periodically in the area of Barnes Avenue for more than a decade, Superstorm Sandy exacerbated the existing vulnerabilities in the wastewater collection and treatment system. The flow diversion project proposed herein addresses the vulnerabilities and capacity limitation in the sewer system by diverting wastewater generated upstream to a portion of the sewer system with adequate capacity for conveyance and treatment.

The project proposes construction of a new flow diversion pump station adjacent to the existing Weekes Park Pumping Station, renovation of the Newmans Court Pumping Station, and installation of new force main piping under Front Street/Route 102, Ingraham Boulevard, Jerusalem Avenue, Meadowbrook State Parkway, and South Franklin Street to convey the redirected wastewater flow. Under the proposed configuration, up to 5.85 million gallons per day of wastewater flow would be redirected upstream of Baldwin and, subsequently, Bay Park Wastewater Treatment Plant (WWTP), to Cedar Creek WWTP.

Funding for the project will be provided by the Clean Water State Revolving Fund Storm Mitigation Loan Program (SMLP) with support from the HUD Community Development Block Grant – Disaster Recovery (CDBG-DR) program for storm recovery activities in New York State.

A floodplains map based on the FEMA Base Flood Elevation Maps, has been prepared for this project and is available for review at http://www.stormrecovery.ny.gov/environmental-docs

There are three primary purposes for this notice. First, people who may be affected by activities in floodplains and those who have an interest in the protection of the natural environment should be given an opportunity to express their concerns and provide information about these areas. Second, adequate public notice is an important public education tool. The dissemination of information about floodplains facilitates and enhances Federal efforts to reduce the risks associated with the occupancy and modification of these special areas. Third, as a matter of fairness, when the Federal government determines it will participate in actions taking place in floodplains, it must inform those who may be put at greater or continued risk.

PUBLIC COMMENTS

Any individual, group, or agency may submit written comments on the proposed action or a request for further information to Thomas King, Assistant General Counsel and Certifying Officer, Governor's Office of Storm Recovery, 99 Washington Avenue, Suite 1224, Albany, NY 12231; email: NYSCDBG_DR_ER@nyshcr.org. All comments received by April 7, 2015 will be considered.

Thomas King, Assistant General Counsel and Certifying Officer

March 23, 2015

ganization filed with the Secretary of State of New York SSNY on November 21, 2014. Office location in Nassau, SSNY has been designated for service of process. SSNY shall mail copy of any process served against the LLC at 1750 Plaza Ave, New Hyde Park, NY 11040. Purpose: any lawful purpose.

Legal Notice # 21064071
Notice of formation of Property Professionals USA, LLC. Arts of Org filed with the Secretary of State of New York on 12/16/14.Office location in Nassau county. SSNY has been designated for service of process. SSNY shall mail copy of process to the LLC: 479 South Broadway Hicksville, NY 11801.Purpose: any lawful purpose.

Legal Notice # 21065977
3G Eileen Way LLC. Arts. of Org. filed with SSNY on 01/29/15. Off. Loc.: Nassau Co. SSNY desig. as agt. upon whom process may be served. SSNY shall mail process to: Mark Grgas, c/o United Air Conditioning, 27-20 Skillman Ave., LIC, NY 11101. General Purposes.

Legal Notice # 21065997
Global Creations LLC. Arts. of Org. filed with SSNY on 02/26/15. Off. Loc.: Nassau Co. SSNY desig. as agt. upon whom process may be served. SSNY shall mail process to: The LLC, P.O. Box 1359, NY, NY 10018. General Purposes.

Legal Notice # 21066074
1821 Grove Street LLC. Arts. of Org. filed with SSNY on 12/04/14. Off. Loc.: Nassau Co. SSNY desig. as agt. upon whom process may be served. SSNY shall mail process to: The LLC, 12 22nd St., Jericho, NY 11753. General Purposes.
Legal 2106817201

LLC. filed with the SSNY on 2/24/15. Office location: Nassau County. SSNY is designated as agent upon whom process against the LLC may be served. SSNY shall mail process to The LLC, c/o Barbara R. Sass, 60 Astor Ln., Sands Point, NY 11050. General Purposes.

Legal Notice # 21062481
OXFORD MECHANICAL LLC, a domestic LLC, filed with the SSNY on 2/10/15. Office location: Nassau County. SSNY is designated as agent upon whom process against the LLC may be served. SSNY shall mail process to The LLC, 182 Park Ave., Williston Park, NY 11596. General Purposes.

Legal Notice # 21068551
NOTICE TO BIDDERS
SEALED PROPOSALS WILL BE PUBLICLY OPENED AND READ BY THE ASSISTANT SUPERINTENDENT FOR FINANCE & OPERATIONS OF THE BOARD OF EDUCATION, SEWANHAKA CENTRAL HIGH SCHOOL DISTRICT OF THE TOWNS OF HEMPSTEAD AND NORTH HEMPSTEAD AT THE CENTRAL ADMINISTRATIVE OFFICES, 77 LANDAU AVENUE, FLORAL PARK, N.Y. 11001 FOR:

Automotive &:
Light Truck Parts
Custodial Supplies
Electrical Supplies
General Office &
School Supplies
Uniforms for Custodial and Security Staff

April 16, 2015 @ 2:00 pm
COPIES OF SPECIFICATIONS AND CONDITIONS MAY BE OBTAINED AT THE BUSINESS OFFICE, ADDRESS ABOVE
ELEANOR MOORE
DISTRICT CLERK

BE RECEIVED by the Commissioner of General Services, c/o Division of Public Works, Town of Hempstead, Town Hall, Room 211, 350 Front St., Hempstead, New York, until 11:00 A.M. prevailing time on April 2, 2015 at which time they shall be publicly opened and read aloud and the contract awarded as soon thereafter as may be practicable for:
Storm Water Drain & Road Improvement Tinker Drive – Chance Drive Area Oceanside, Town of Hempstead, Nassau County, New York.
PW # 22-15
A – 1 A fee of $100.00 (Check only) will be required for all bidders for a copy of the Proposed Contract Documents.
A – 2 Each proposal must be accompanied by a Certified Check or Bid Bond payable to the Town of Hempstead for not less than 5% of the estimated amount of the bid.
A – 3 Bid documents may be OBTAINED IN PERSON ONLY AT THE OFFICE of THE COMMISSIONER of GENERAL SERVICES, c/o DIVISION of PUBLIC WORKS, TOWN HALL, ROOM 211, HEMPSTEAD, N.Y. AND MAY BE SEEN AT THE SAME OFFICE.
A – 4 Federal Equal Opportunity and Labor Standards are applicable for all work performed under this contract.
A – 5 The Town of Hempstead reserves the right to reject any or all bids.
Dated: March 23, 2015
HEMPSTEAD, NEW YORK
KATHLEEN P. MURRAY
Supervisor
Nasrin G. Ahmad
Town Clerk
STEPHEN D'ESPOSITO
Commissioner
Department of
General Services

/02/15. Office Loc: Nassau County, SSNY designated as agent of LLC upon whom process against it may be served. SSNY shall mail a copy of process to: The LLC, 8 Waldo Ave., Greenvale, NY 11548. Purpose: to engage in any lawful act.

Legal Notice # 21068495
NOTICE TO BIDDERS: SEALED BIDS ARE REQUESTED BY THE BOARD OF COOPERATIVE EDUCATIONAL SERVICES OF NASSAU COUNTY, NEW YORK AND THOSE PARTICIPATING DISTRICTS OR MUNICIPALITIES WHO HAVE OR MAY JOIN THESE COOPERATIVES FOR:
BID # 15/16-012 - FOOD SERVICE EQUIPMENT TO BE OPENED ON APRIL 15, 2015, AT 2:00 P.M.
SPECIFICATIONS MAY BE OBTAINED BY REGISTERING ONLINE IN THE CO-OP BIDDING-VENDORS SECTION UNDER ONLINE SERVICES AT www.nassauboces.org, OR AT THE BOARD OF COOPERATIVE EDUCATIONAL SERVICES OF NASSAU COUNTY, GEORGE FARBER ADMINISTRATIVE CENTER, BUSINESS SERVICES DEPARTMENT, 71 CLINTON ROAD, GARDEN CITY, NEW YORK 11530 (516) 396-2240 UNTIL THE ABOVE DATE, AT WHICH TIME THEY WILL BE PUBLICLY OPENED.
BY ORDER OF: BOARD OF COOPERATIVE EDUCATIONAL SERVICES OF NASSAU COUNTY.
Michael R. Perina
Purchasing Agent

09/18/08. Off. Loc.: Nassau Co. SSNY desig. as agt. upon whom process may be served. The latest date to dissolve is 12/31/2108. SSNY shall mail process to: The LLC, 10 Eagle Point Dr., Great Neck, NY 11024. General Purposes.

Legal Notice # 21068517
NOTICE TO BIDDERS: SEALED BIDS ARE REQUESTED BY THE BOARD OF COOPERATIVE EDUCATIONAL SERVICES OF NASSAU COUNTY, NEW YORK AND THOSE PARTICIPATING DISTRICTS OR MUNICIPALITIES WHO HAVE OR MAY JOIN THESE COOPERATIVES FOR:
BID # 15/16-008 - PLUMBING AND HEATING SUPPLIES TO BE OPENED ON APRIL 13, 2015, AT 2:00 P.M.
SPECIFICATIONS MAY BE OBTAINED BY REGISTERING ONLINE IN THE CO-OP BIDDING-VENDORS SECTION UNDER ONLINE SERVICES AT www.nassauboces.org, OR AT THE BOARD OF COOPERATIVE EDUCATIONAL SERVICES OF NASSAU COUNTY, GEORGE FARBER ADMINISTRATIVE CENTER, BUSINESS SERVICES DEPARTMENT, 71 CLINTON ROAD, GARDEN CITY, NEW YORK 11530 (516) 396-2240 UNTIL THE ABOVE DATE, AT WHICH TIME THEY WILL BE PUBLICLY OPENED.
BY ORDER OF: BOARD OF COOPERATIVE EDUCATIONAL SERVICES OF NASSAU COUNTY.
Michael R. Perina
Purchasing Agent

Legal Notice # 21068565
NOTICE TO BIDDERS
SEALED BIDS will be received by the Department of Public Works of the Town of North Hempstead in the Town Board Room located on the second floor of the Town Hall, 220 Plandome Road, Manhasset, New York 11030 on Wednesday April 8, 2015 at 10:30 a.m., at which time they will be publicly opened and read and the Contract awarded as soon thereafter as practicable for:
ON-CALL SERVICES FOR MILLING, PAVING AND MISCELLANEOUS CONCRETE WORK ON VARIOUS TOWN ROADWAYS
DPW PROJECT NO. 15-05
Bids may be mailed or delivered to the Town Clerk, 200 Plandome Road, Manhasset, New York 11030, provided the Bid is actually received by the Town Clerk prior to the time of public opening; or Bids may be delivered to the place of public opening (i.e., the Town Board Room) immediately prior to the time of public opening.
All Bids must be sealed and submitted in the pre-marked envelope provided with the Bid Documents, or must be sealed and submitted in a package (envelope) MARKED IN THE SAME WAY as the pre-marked envelope provided with the Bid Documents.
All BIDDERS MUST complete the required Contractor's Qualifications Statement and must provide a copy of the required Statement of Financial Conditions, even if a Bidder is currently executing work for the Town.
The Bids shall be in accordance with the requirements of the Specifications, Contract Plans and terms of the proposed Contract.
No bids shall be received unless made in writing on forms furnished, and unless accompanied by a Certified Check or Bid Bond made payable to the Town of North Hempstead for an amount not less than five (5%) percent of the Bid price.
BIDDERS ARE HEREBY ADVISED THAT ALL BONDS AND INSURANCE DOCUMENTS SUBMITTED WILL BE VERIFIED FOR AUTHENTICITY BY DIRECT COMMUNICATION WITH THE SURETY/INSURANCE COMPANY.
ALL BONDING AND INSURANCE COMPANIES MUST BE LICENSED TO DO BUSINESS IN THE STATE OF NEW YORK.
The Town reserves the right to reject any and all Bids, and to waive any informalities therein.
All bidders are required to submit proof of participation in apprentice training programs which have been registered and approved by the New York State Department of Labor for the trades participating in the work to be performed.
The Town will not accept Bids from, nor award a Contract to, anyone who cannot prove to the satisfaction of the Town Board that he has sufficient experience in this type of construction and financially able and organized to successfully carry out the work covered by the Plans and Specifications in the required completion time. Special qualification requirements are contained in the Contract Documents.
Contract Plans, Specifications, and other Contract Documents may be examined at the office of the Department of Public Works, Town of North Hempstead, 285 Denton Avenue, New Hyde Park, New York 11040, or at the office of the Town Clerk at Town Hall, 200 Plandome Road, Manhasset, New York 11030, on and after Monday March 23, 2015. On and after this date, copies may be purchased only at the office of the Town Clerk.
Bidders should note that, pursuant to New York General Municipal Law §103(16), the contract that may be awarded pursuant to the specifications for this bid may be utilized by any governmental entity in New York State, subject to the provisions contained in the Bid Documents.
A deposit of $50.00 is required for each set of Plans and Specifications. The deposit shall be in cash or certified check in the name of the Town of North Hempstead. The deposit of each bidder will be refunded for return of one set, in good condition, within thirty days following the Award of Contract or within sixty days following the opening of bids if no Contract is awarded. All other deposits will be refunded on the basis of fifty (50%) percent of the deposit amount for sets returned in good condition within the same period. Sets are to be returned to the office of the Town Clerk at the above address for full or partial deposit refund.
BY ORDER OF
THE TOWN BOARD
OF THE TOWN
OF NORTH HEMPSTEAD
WAYNE H. WINK, JR.,
TOWN CLERK
PAUL DIMARIA, P.E.
COMMISSIONER PUBLIC WORKS

EARLY NOTICE AND PUBLIC EXPLANATION OF A PROPOSED ACTIVITY IN A 100-YEAR FLOODPLAIN

BARNES AVENUE SANITARY SEWAGE FLOW DIVERSION PROJECT
VILLAGE OF HEMPSTEAD, NY

Thomas King, Assistant General Counsel and Certifying Officer
Governor's Office of Storm Recovery
99 Washington Avenue, Suite 1224
Albany, NY 12231

NOTIFICATION OF ACTIVITY IN A FLOODPLAIN

To: All interested Agencies, Groups, and Individuals

This is to give notice that the Governor's Office of Storm Recovery (GOSR) is conducting an evaluation as required by Executive Order 11988 in accordance with U.S. Department of Housing and Urban Renewal (HUD) regulations under 24 CFR 55.20 Subpart C - Procedures for Making Determinations on Floodplain Management and Protection of Wetlands, to determine the potential effects that its activity in the floodplain would have on the human environment.

Sanitary sewer overflows (SSOs) have occurred periodically at Barnes Avenue and Third Avenue in Baldwin, in the Town of Hempstead, Nassau County. Sanitary sewer overflow is a condition in which untreated wastewater is discharged into the environment and is typically caused by either a surcharge of sewage flow or infiltration of large volumes of stormwater into the sanitary sewer system. Though SSOs have occurred periodically in the area of Barnes Avenue for more than a decade, Superstorm Sandy exacerbated the existing vulnerabilities in the wastewater collection and treatment system. The flow diversion project proposed herein addresses the vulnerabilities and capacity limitation in the sewer system by diverting wastewater generated upstream to a portion of the sewer system with adequate capacity for conveyance and treatment.

The project proposes construction of a new flow diversion pump station adjacent to the existing Weekes Park Pumping Station, renovation of the Newmans Court Pumping Station, and installation of new force main piping under Front Street/Route 102, Ingraham Boulevard, Jerusalem Avenue, Meadowbrook State Parkway, and South Franklin Street to convey the redirected wastewater flow. Under the proposed configuration, up to 5.85 million gallons per day of wastewater flow would be redirected upstream of Baldwin and, subsequently, Bay Park Wastewater Treatment Plant (WWTP), to Cedar Creek WWTP.

Funding for the project will be provided by the Clean Water State Revolving Fund Storm Mitigation Loan Program (SMLP) with support from the HUD Community Development Block Grant – Disaster Recovery (CDBG-DR) program for storm recovery activities in New York State.

A floodplains map based on the FEMA Base Flood Elevation Maps, has been prepared for this project and is available for review at http://www.stormrecovery.ny.gov/environmental-docs

There are three primary purposes for this notice. First, people who may be affected by activities in floodplains and those who have an interest in the protection of the natural environment should be given an opportunity to express their concerns and provide information about these areas. Second, adequate public notice is an important public education tool. The dissemination of information about floodplains facilitates and enhances Federal efforts to reduce the risks associated with the occupancy and modification of these special areas. Third, as a matter of fairness, when the Federal government determines it will participate in actions taking place in floodplains, it must inform those who may be put at greater or continued risk.

PUBLIC COMMENTS
Any individual, group, or agency may submit written comments on the proposed action or a request for further information to Thomas King, Assistant General Counsel and Certifying Officer, Governor's Office of Storm Recovery, 99 Washington Avenue, Suite 1224, Albany, NY 12231; email: NYSCDBG_DR_ER@nyshcr.org. All comments received by April 7, 2015 will be considered.

Thomas King, Assistant General Counsel and Certifying Officer

March 23, 2015

2106817201

EXHIBIT 3 Copy of Notice Transmitting Notice of Final Public Review and Proof of Publication

FINAL NOTICE AND PUBLIC EXPLANATION OF A PROPOSED ACTIVITY IN A 100-YEAR FLOODPLAIN

BARNES AVENUE SANITARY SEWAGE FLOW DIVERSION PROJECT VILLAGE OF HEMPSTEAD, NY

Thomas King, Assistant General Counsel and Certifying Officer
Governor's Office of Storm Recovery
99 Washington Avenue, Suite 1224
Albany, NY 12260

NOTIFICATION OF ACTIVITY IN A FLOODPLAIN

To: All interested Agencies, Groups, and Individuals

This is to give notice that the Governor's Office of Storm Recovery (GOSR) has conducted an evaluation as required by Executive Order 11988 in accordance with U.S. Department of Housing and Urban Renewal (HUD) regulations under 24 CFR 55.20 Subpart C - Procedures for Making Determinations on Floodplain Management and Protection of Wetlands, to determine the potential effects that its activity in the floodplain would have on the human environment.

Pursuant to the CDBG-DR Program and Federal Register Notices 78 Fed. Reg. 14329, 78 Fed. Reg. 69104, and 79 Fed. Reg. 62194 (Notices), published March 5, 2013, November 18, 2013, and October 16, 2014, respectively, NYS has been allocated approximately $4.4 billion of CDBG-DR funds for storm recovery activities. Funding for the Barnes Avenue Sanitary Sewage Flow Diversion Project (Project) will be provided by the Clean Water State Revolving Fund Storm Mitigation Loan Program (SMLP) with support from the CDBG-DR program.

This Notice pertains to the portion of the Project that is located within the Federal Emergency Management Agency (FEMA) flood hazard area. A project area and floodplain map based on the FEMA Base Flood Elevation Maps, has been prepared for this project and is available for review at http://www.stormrecovery.ny.gov/environmental-docs.

Sanitary sewer overflows (SSOs) have occurred periodically at Barnes Avenue and Third Avenue in Baldwin, in the Town of Hempstead, Nassau County. Sanitary sewer overflow is a condition in which untreated wastewater is discharged into the environment and is typically caused by either a surcharge of sewage flow or infiltration of large volumes of stormwater into the sanitary sewer system. Though SSOs have occurred periodically in the area of Barnes Avenue for more than a decade, Superstorm Sandy exacerbated the existing vulnerabilities in the wastewater collection and treatment system. The Project addresses the vulnerabilities and capacity limitation in the sewer system by diverting wastewater generated upstream to a portion of the sewer system with adequate capacity for conveyance and treatment.

The Project proposes construction of a new flow diversion pump station adjacent to the existing Weekes Park Pumping Station, renovation of the Newmans Court Pumping Station, and installation of new force main piping under Front Street/Route 102, Ingraham Boulevard,

Jerusalem Avenue, Meadowbrook State Parkway, and South Franklin Street to convey the redirected wastewater flow. Under the proposed configuration, up to 5.85 million gallons per day of wastewater flow would be redirected upstream of Baldwin and, subsequently, Bay Park Wastewater Treatment Plant (WWTP), to Cedar Creek WWTP.

There are three primary purposes for this notice. First, people who may be affected by activities in floodplains and those who have an interest in the protection of the natural environment should be given an opportunity to express their concerns and provide information about these areas. Second, adequate public notice is an important public education tool. The dissemination of information about floodplains facilitates and enhances Federal efforts to reduce the risks associated with the occupancy and modification of these special areas. Third, as a matter of fairness, when the Federal government determines it will participate in actions taking place in floodplains, it must inform those who may be put at greater or continued risk.

These alternatives will be re-evaluated in light of any public comments received.

FLOODPLAIN MANAGEMENT PLAN

GOSR has reevaluated the alternatives to Project activities in the floodplain and has determined that there is no practicable alternative. A full copy of the Floodplain Management Plan (8-step process) documenting compliance with Executive Order 11988 can be viewed online at http://www.stormrecovery.ny.gov/environmental-docs.

PUBLIC COMMENTS

Any individual, group, or agency may submit written comments on the proposed action or a request for further information to Thomas King, Assistant General Counsel and Certifying Officer, Governor's Office of Storm Recovery, 99 Washington Avenue, Suite 1224, Albany, NY 12260; email: NYSCDBG_DR_ER@nyshcr.org. All comments received by **April 27, 2015** will be considered.

Thomas King, Assistant General Counsel and Certifying Officer

April 17, 2015

AFFIDAVIT OF PUBLICATION

FINAL NOTICE AND PUBLIC EXPLANATION OF A PROPOSED ACTIVITY IN A 100-YEAR FLOODPLAIN
BARNES AVENUE SANITARY SEWAGE FLOW DIVERSION PROJECT
VILLAGE OF HEMPSTEAD, NY

Thomas King, Assistant General Counsel and Certifying Officer
Governor's Office of Storm Recovery
99 Washington Avenue, Suite 1224, Albany, NY 12260

NOTIFICATION OF ACTIVITY IN A FLOODPLAIN

To: All interested Agencies, Groups, and Individuals

This is to give notice that the Governor's Office of Storm Recovery (GOSR) has conducted an evaluation as required by Executive Order 11988 in accordance with U.S. Department of Housing and Urban Renewal (HUD) regulations under 24 CFR 55.20 Subpart C - Procedures for Making Determinations on Floodplain Management and Protection of Wetlands, to determine the potential effects that its activity in the floodplain would have on the human environment.

Pursuant to the CDBG-DR Program and Federal Register Notices 78 Fed. Reg. 14329, 78 Fed. Reg. 69104, and 79 Fed. Reg. 62194 (Notices), published March 5, 2013, November 18, 2013, and October 16, 2014, respectively, NYS has been allocated approximately $4.4 billion of CDBG-DR funds for storm recovery activities. Funding for the Barnes Avenue Sanitary Sewage Flow Diversion Project (Project) will be provided by the Clean Water State Revolving Fund Storm Mitigation Loan Program (SMLP) with support from the CDBG-DR program.

This Notice pertains to the portion of the Project that is located within the Federal Emergency Management Agency (FEMA) flood hazard area. A project area and floodplain map based on the FEMA Base Flood Elevation Maps, has been prepared for this project and is available for review at http://www.stormrecovery.ny.gov/environmental-docs.

Sanitary sewer overflows (SSOs) have occurred periodically at Barnes Avenue and Third Avenue in Baldwin, in the Town of Hempstead, Nassau County. Sanitary sewer overflow is a condition in which untreated wastewater is discharged into the environment and is typically caused by either a surcharge of sewage flow or infiltration of large volumes of stormwater into the sanitary sewer system. Though SSOs have occurred periodically in the area of Barnes Avenue for more than a decade, Superstorm Sandy exacerbated the existing vulnerabilities in the wastewater collection and treatment system. The Project addresses the vulnerabilities and capacity limitation in the sewer system by diverting wastewater generated upstream to a portion of the sewer system with adequate capacity for conveyance and treatment.

The Project proposes construction of a new flow diversion pump station adjacent to the existing Weekes Park Pumping Station, renovation of the Newmans Court Pumping Station, and installation of new force main piping under Front Street/Route 102, Ingraham Boulevard, Jerusalem Avenue, Meadowbrook State Parkway, and South Franklin Street to convey the redirected wastewater flow. Under the proposed configuration, up to 5.85 million gallons per day of wastewater flow would be redirected upstream of Baldwin and, subsequently, Bay Park Wastewater Treatment Plant (WWTP), to Cedar Creek WWTP.

There are three primary purposes for this notice. First, people who may be affected by activities in floodplains and those who have an interest in the protection of the natural environment should be given an opportunity to express their concerns and provide information about these areas. Second, adequate public notice is an important public education tool. The dissemination of information about floodplains facilitates and enhances Federal efforts to reduce the risks associated with the occupancy and modification of these special areas. Third, as a matter of fairness, when the Federal government determines it will participate in actions taking place in floodplains, it must inform those who may be put at greater or continued risk.

FLOODPLAIN MANAGEMENT PLAN

GOSR has reevaluated the alternatives to Project activities in the floodplain and has determined that there is no practicable alternative. A full copy of the Floodplain Management Plan (8-step process) documenting compliance with Executive Order 11988 can be viewed online at http://www.stormrecovery.ny.gov/environmental-docs.

PUBLIC COMMENTS

Any individual, group, or agency may submit written comments on the proposed action or a request for further information to Thomas King, Assistant General Counsel and Certifying Officer, Governor's Office of Storm Recovery, 99 Washington Avenue, Suite 1224, Albany, NY 12260; email: NYSCDBG_DR_ER@nyshcr.org. All comments received by April 27, 2015 will be considered.

Thomas King, Assistant General Counsel and Certifying Officer
April 17, 2015
(4/17 H#407)

Affidavit of Publication

BEACON

Published in the Heart of the
king Retail Market in the United States

D BY NASSAU COUNTY PUBLICATIONS INC.
RE ST. HEMPSTEAD, N.Y. 11550

(516) 481-5400

ASSAU
YORK

Yohe of W.Hempstead, Nassau
w York, being duly sworn, deposes
at she is and was, at the time of pub-
he annexed notice, principal clerk of
npstead Beacon
ewspaper published at Hempstead,
nty, New York, and that the notice,
e annexed is a true printed copy, was
n said paper in issues of the

day of April 20 15
day of 20
day of 20
day of 20
day of 20
day of 20
day of 20

arbara Yohe (L.S.)

efore me this 17
pril , 2015

CAL FOGELMAN
NOTARY PUBLIC-STATE OF NEW YORK
No. 01FO6129751
Qualified In Nassau County
My Commission Expires July 05, 2017

From: Carrie Cosenza [carrieacosenza@gmail.com]
Sent: Monday, April 06, 2015 8:45 AM
To: nyshcr.sm.nyscdbg.dr.er
Subject: Barnes Avenue Sanitary Sewage Flow Diversion Project

Dear Mr. King,

I am a resident of Baldwin, New York, and live at 2848 Grand Avenue, which is on the corner of Grand Avenue and Barnes. I live here with my husband and one year old son. I am very concerned with the flooding and sewer damage that is occurring just a few steps from my house.

I understand that there is a plan for a new flow diversion for the sewage system. I support whatever plan will insure that there is no environmental harm to the land and most importantly, environmental/impact on the health of myself and my family (and my neighbors.)

I've been told that the development of additional apartment complexes at the end of Grand Avenue (Halandia Shores/Golden Agev-2870 Grand and 2860) is exhaserbating the problem. If this is true, then the development needs to stop. While I am in full support of Baldwin's revitalization, I cant support this if this development is one of the causes of the flooding and sewer problems. I cant imagine that the addition of several apartments will do any good to the already harmed environment. Im fairly sure there are still standing "condemned" houses on Barnes from Sandy and the sewage flooding. We need to clean this area up and make sure it is safe and workable before we take on additional residents.

Thank you.

From: Kevin Blackburn [kbblackburn@aol.com]
Sent: Tuesday, April 07, 2015 8:38 PM
To: nyshcr.sm.nyscdbg.dr.er
Subject: Barnes Ave. Sewage floodplain protection

Dear Sir/Ma'am,

My name is Kevin Blackburn and I reside on 3rd Place off of Barnes Ave.

My wife, Kathy and I were directly affected by the back flow of raw sewage onto 3rd Place in the aftermath of Super Storm Sandy on Oct 30th 2012.

The main at Barnes and 3rd broke and the back flow continued to erupt from the street for three days.

Subsequently, all of the homes on 3rd place (and beyond) encountered raw sewage in our homes.

I am emailing you to say I am in favor of the proposed project to build the pumping stations and diversion stations above and upstream of Baldwin NY, to bring us in compliance with the Clean Water Act of 1972
33 U.S.C. §1251 et seq. (1972)

Furthermore, Being that I am a member in good standing of IBEW Local Union # 3, I would also strongly urge that all work to be performed be done by competent Union labor.

Thank you for your time in this very important matter.

Kevin Blackburn

2789 3rd Place
Baldwin, NY 11510

From: Anna Edelstein [aredelstein@gmail.com]
Sent: Tuesday, April 07, 2015 3:34 PM
To: nyshcr.sm.nyscdbg.dr.er
Subject: Activity in FloodPlain - BARNES AVE, BALDWIN

My husband & I live in this neighborhood and continue to see flooding and sewage overflow on Barnes Ave They were present pre Superstorm Sandy and now post Superstorm Sandy, they remain a problem for all of us-most especially those that live on Barnes and 3rd Place in Baldwin.
From speaking to others in the area, they are seeing flooding at Halandia Shores persist. The new housing construction seems to have exacerbated the issue. The situation is not getting better.
We ask that all necessary steps be taken to insure that we will not have any more of these problems in the future. It has already been too many years of too many problems for us here in the Barnes area.
Thank you.
Anna Edelstein

USFWS and NYSDEC Wetland Maps

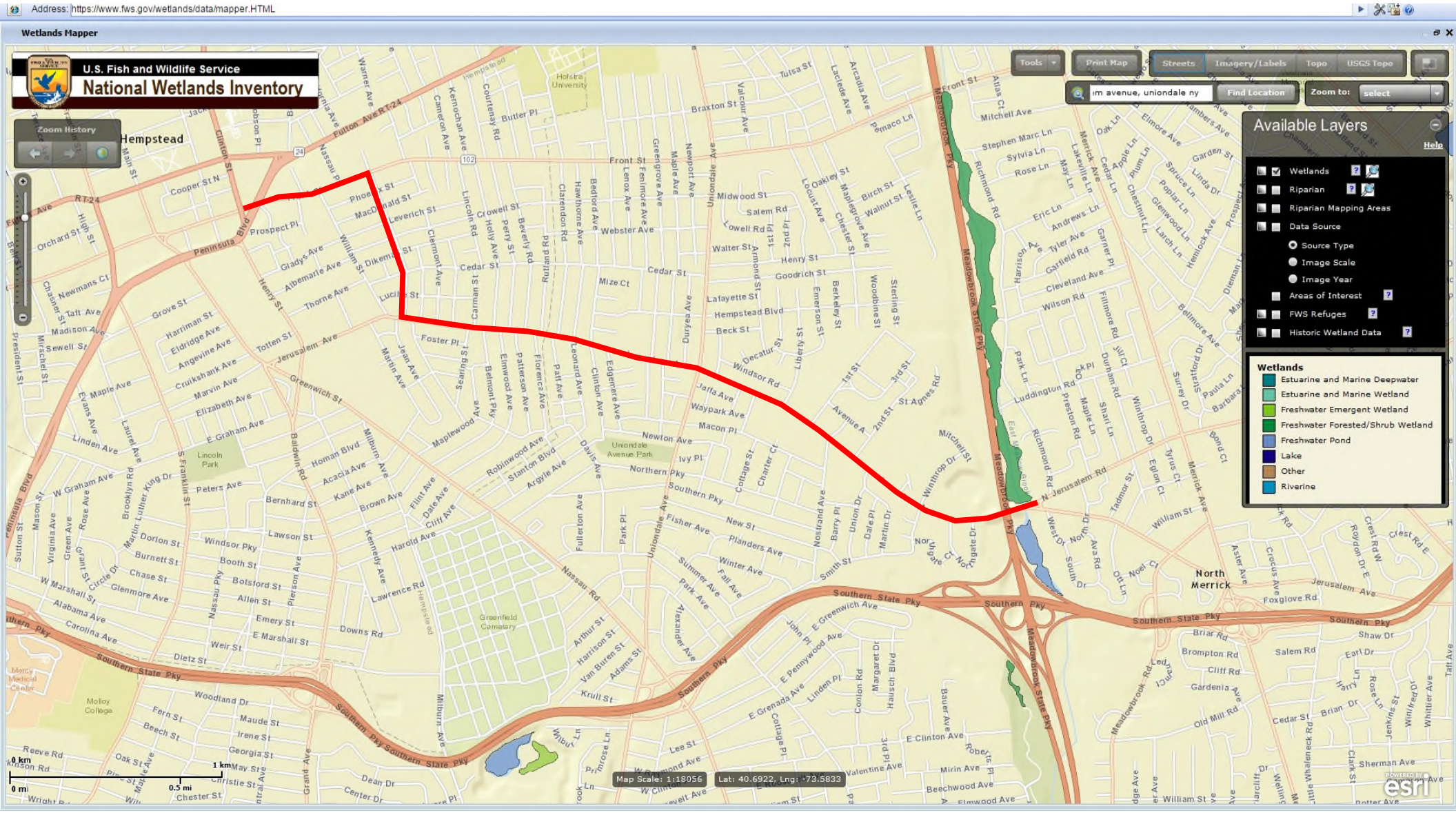

Project Location

NEW YORK STATE - DEPARTMENT OF
ENVIRONMENTAL CONSERVATION

Environmental Resource Mapper

Search	Layers & Legend	Tell Me More...
Need a Permit?	Contacts	Help

Map Layers & Legend

More layers appear as you zoom in.

- [x] Classified Water Bodies
- [x] Unique Geological Features
- [x] Classified Water Bodies
- [x] State-Regulated Freshwater Wetlands
- Wetland Checkzone ?
- [ ] Rare Plants and Rare Animals
- [ ] Significant Natural Communities
- Natural Communities Vicinity ?
- [x] Background Map
- [x] Adirondack Park Boundary
- [x] Counties

Click "Refresh Layers" to activate and deactivate layers.

Refresh Layers

Locations of old and potential records of rare

Click on a record # to zoom to or highlight that feature

Counties		
Record #	County	Area (Mile^2)
1	NASSAU	287.74

Project Location

Information, Planning, and Conservation System (IPaC)
Trust Resources List

U.S. Fish and Wildlife Service

Trust Resources List

This resource list is to be used for planning purposes only — it is not an official species list.

Endangered Species Act species list information for your project is available online and listed below for the following FWS Field Offices:

Long Island Ecological Services Field Office
340 SMITH ROAD
SHIRLEY, NY 11967
(631) 286-0485

Project Name:

Barnes

U.S. Fish and Wildlife Service

Trust Resources List

Project Location Map:

Project Counties:

Nassau, NY

Geographic coordinates (Open Geospatial Consortium Well-Known Text, NAD83):

MULTIPOLYGON (((-73.5765044 40.6948582, -73.5736946 40.6953308, -73.5726431 40.6920932, -73.5763328 40.6919785, -73.5765044 40.6948582)))

Project Type:

Wastewater Pipeline

U.S. Fish and Wildlife Service

Trust Resources List

Endangered Species Act Species List (USFWS Endangered Species Program).

There are a total of **6** threatened or endangered species on your species list. Species on this list should be considered in an effects analysis for your project and could include species that exist in another geographic area. For example, certain fishes may appear on the species list because a project could cause downstream effects on the species. Critical habitats listed under the **Has Critical Habitat** column may or may not lie within your project area. See the **Critical habitats within your project area** section below for critical habitat that lies within your project area. Please contact the designated FWS office if you have questions.

Species that should be considered in an effects analysis for your project:

Birds	Status		Has Critical Habitat	Contact
Piping Plover (*Charadrius melodus*) Population: except Great Lakes watershed	Threatened	species info	Final designated critical habitat Final designated critical habitat	Long Island Ecological Services Field Office
Red Knot (*Calidris canutus rufa*) Population:	Threatened	species info		Long Island Ecological Services Field Office
Roseate tern (*Sterna dougallii dougallii*) Population: northeast U.S. nesting pop.	Endangered	species info		Long Island Ecological Services Field Office
Flowering Plants				
Sandplain gerardia (*Agalinis acuta*)	Endangered	species info		Long Island Ecological Services Field Office
Seabeach amaranth (*Amaranthus pumilus*)	Threatened	species info		Long Island Ecological Services Field Office
Mammals				
northern long-eared Bat (*Myotis septentrionalis*) Population:	Proposed Endangered	species info		Long Island Ecological Services Field Office

Critical habitats within your project area:

U.S. Fish and Wildlife Service

Trust Resources List

There are no critical habitats within your project area.

FWS National Wildlife Refuges (USFWS National Wildlife Refuges Program).

There are no refuges found within the vicinity of your project.

FWS Migratory Birds (USFWS Migratory Bird Program).

The protection of birds is regulated by the Migratory Bird Treaty Act (MBTA) and the Bald and Golden Eagle Protection Act (BGEPA). Any activity, intentional or unintentional, resulting in take of migratory birds, including eagles, is prohibited unless otherwise permitted by the U.S. Fish and Wildlife Service (50 C.F.R. Sec. 10.12 and 16 U.S.C. Sec. 668(a)). The MBTA has no provision for allowing take of migratory birds that may be unintentionally killed or injured by otherwise lawful activities. For more information regarding these Acts see: http://www.fws.gov/migratorybirds/RegulationsandPolicies.html.

All project proponents are responsible for complying with the appropriate regulations protecting birds when planning and developing a project. To meet these conservation obligations, proponents should identify potential or existing project-related impacts to migratory birds and their habitat and develop and implement conservation measures that avoid, minimize, or compensate for these impacts. The Service's Birds of Conservation Concern (2008) report identifies species, subspecies, and populations of all migratory nongame birds that, without additional conservation actions, are likely to become listed under the Endangered Species Act as amended (16 U.S.C 1531 et seq.).

For information about Birds of Conservation Concern, go to:
http://www.fws.gov/migratorybirds/CurrentBirdIssues/Management/BCC.html.

To search and view summaries of year-round bird occurrence data within your project area, go to the Avian Knowledge Network Histogram Tool links in the Bird Conservation Tools section at: http://www.fws.gov/migratorybirds/CCMB2.htm.

For information about conservation measures that help avoid or minimize impacts to birds, please visit:
http://www.fws.gov/migratorybirds/CCMB2.htm.

Migratory birds of concern that may be affected by your project:
There are **25** birds on your Migratory birds of concern list. The underlying data layers used to generate the migratory bird list of concern will continue to be updated regularly as new and better information is obtained. User feedback is one method of identifying any needed improvements. Therefore, users are encouraged to submit comments about any questions regarding species ranges (e.g., a bird on the USFWS BCC list you know

U.S. Fish and Wildlife Service

Trust Resources List

does not occur in the specified location appears on the list, or a BCC species that you know does occur there is not appearing on the list). Comments should be sent to the ECOS Help Desk.

Species Name	Bird of Conservation Concern (BCC)	Species Profile	Seasonal Occurrence in Project Area
American Oystercatcher (*Haematopus palliatus*)	Yes	species info	Year-round
American bittern (*Botaurus lentiginosus*)	Yes	species info	Breeding
Bald eagle (*Haliaeetus leucocephalus*)	Yes	species info	Year-round
Black Skimmer (*Rynchops niger*)	Yes	species info	Breeding
Black rail (*Laterallus jamaicensis*)	Yes	species info	Breeding
Black-billed Cuckoo (*Coccyzus erythropthalmus*)	Yes	species info	Breeding
Blue-winged Warbler (*Vermivora pinus*)	Yes	species info	Breeding
Canada Warbler (*Wilsonia canadensis*)	Yes	species info	Breeding
Fox Sparrow (*Passerella liaca*)	Yes	species info	Wintering
Gull-billed Tern (*Gelochelidon nilotica*)	Yes	species info	Breeding
Hudsonian Godwit (*Limosa haemastica*)	Yes	species info	Migrating
Least Bittern (*Ixobrychus exilis*)	Yes	species info	Breeding
Least tern (*Sterna antillarum*)	Yes	species info	Breeding
Pied-billed Grebe (*Podilymbus podiceps*)	Yes	species info	Year-round
Prairie Warbler (*Dendroica discolor*)	Yes	species info	Breeding
Purple Sandpiper (*Calidris maritima*)	Yes	species info	Wintering

U.S. Fish and Wildlife Service

Trust Resources List

Red Knot (*Calidris canutus rufa*)	Yes	species info	Wintering
Rusty Blackbird (*Euphagus carolinus*)	Yes	species info	Wintering
Saltmarsh Sparrow (*Ammodramus caudacutus*)	Yes	species info	Breeding
Seaside Sparrow (*Ammodramus maritimus*)	Yes	species info	Year-round
Short-eared Owl (*Asio flammeus*)	Yes	species info	Wintering
Snowy Egret (*Egretta thula*)	Yes	species info	Breeding
Upland Sandpiper (*Bartramia longicauda*)	Yes	species info	Breeding
Wood Thrush (*Hylocichla mustelina*)	Yes	species info	Breeding
Worm eating Warbler (*Helmitheros vermivorum*)	Yes	species info	Breeding

NWI Wetlands (USFWS National Wetlands Inventory).

The U.S. Fish and Wildlife Service is the principal Federal agency that provides information on the extent and status of wetlands in the U.S., via the National Wetlands Inventory Program (NWI). In addition to impacts to wetlands within your immediate project area, wetlands outside of your project area may need to be considered in any evaluation of project impacts, due to the hydrologic nature of wetlands (for example, project activities may affect local hydrology within, and outside of, your immediate project area). It may be helpful to refer to the USFWS National Wetland Inventory website. The designated FWS office can also assist you. Impacts to wetlands and other aquatic habitats from your project may be subject to regulation under Section 404 of the Clean Water Act, or other State/Federal Statutes. Project Proponents should discuss the relationship of these requirements to their project with the Regulatory Program of the appropriate U.S. Army Corps of Engineers District.

Data Limitations, Exclusions and Precautions

The Service's objective of mapping wetlands and deepwater habitats is to produce reconnaissance level information on the location, type and size of these resources. The maps are prepared from the analysis of high altitude imagery. Wetlands are identified based on vegetation, visible hydrology and geography. A margin of

error is inherent in the use of imagery; thus, detailed on-the-ground inspection of any particular site may result in revision of the wetland boundaries or classification established through image analysis.

The accuracy of image interpretation depends on the quality of the imagery, the experience of the image analysts, the amount and quality of the collateral data and the amount of ground truth verification work conducted. Metadata should be consulted to determine the date of the source imagery used and any mapping problems.

Wetlands or other mapped features may have changed since the date of the imagery and/or field work. There may be occasional differences in polygon boundaries or classifications between the information depicted on the map and the actual conditions on site.

Exclusions - Certain wetland habitats are excluded from the National mapping program because of the limitations of aerial imagery as the primary data source used to detect wetlands. These habitats include seagrasses or submerged aquatic vegetation that are found in the intertidal and subtidal zones of estuaries and nearshore coastal waters. Some deepwater reef communities (coral or tuberficid worm reefs) have also been excluded from the inventory. These habitats, because of their depth, go undetected by aerial imagery.

Precautions - Federal, state, and local regulatory agencies with jurisdiction over wetlands may define and describe wetlands in a different manner than that used in this inventory. There is no attempt, in either the design or products of this inventory, to define the limits of proprietary jurisdiction of any Federal, state, or local government or to establish the geographical scope of the regulatory programs of government agencies. Persons intending to engage in activities involving modifications within or adjacent to wetland areas should seek the advice of appropriate federal, state, or local agencies concerning specified agency regulatory programs and proprietary jurisdictions that may affect such activities.

The following wetland types intersect your project area in one or more locations:

Wetland Types	NWI Classification Code	Total Acres
Freshwater Forested/Shrub Wetland	PFO1A	27.2592
Freshwater Pond	PUBH	4.9227

Full Environmental Assessment Form Attachment
Cultural Facilities Listing

Attachment to Part I of FEAF

Question E.1.d.

Are there any facilities serving children, the elderly, people with disabilities (e.g., schools, hospitals, licensed day care centers, or group homes) within 1500 feet of the project site?

People with disabilities: Options for Community Living, Mental Health Association, Helen Keller Services for the Blind

Elderly: St. Agnes Senior Citizen Housing Development Fund, Greenwich Nursing Home Associates, Valucare, A. Holly Patterson Extended Care Facility, Nassau Extended Care Facility

Schools/Children: Uniondale Early Childhood Center, All Aboard Daycare, Grace Cathedral of Uniondale, Uniondale School District (Turtle Hook Middle School, Smith Street Elementary School), Hempstead School District (Barack Obama Elementary School, ABGS middle school, Prospect Ave School), St. Martin de Pores Marianist School, St. Marthas school, Prodigy School of the Arts, St. Ladislaus School, Hofstra University (satellite bldgs), John J. Bryne Community Center, Samantha Christian Daycare, Jay's Daycare, Little Leader's Daycare, Little Red Train Private School, Quality Daycare II Inc., Liz Daycare, Wright Care for Kids, Made for Minis, Sams place, Rattray's Daycare, Love Child Daycare LLC, Quality Daycare and Learning Center, Early Light Child Care, Sure Foundation Child Care Center, Crescent School, Covert Daycare, Above and Beyond Daycare, Hempstead Public Library

General Conformity Screening Analysis

Evaluation of de minimis Levels for General Conformity of Construction Projects with New York State Implementation Plans

The conformity requirements of the CAA and regulations promulgated thereunder (conformity requirements) limit the ability of federal agencies to assist, fund, permit, and approve projects in non-attainment areas that do not conform to the applicable SIP. When subject to this regulation, the lead agency is responsible for demonstrating conformity for its proposed action. Conformity determinations for federal actions other than those related to transportation plans, programs, and projects that are developed, funded, or approved under title 23 U.S.C. or the Federal Transit Act (49 U.S.C. 1601 et seq.) must be made according to the requirements of 40 CFR 93, Subpart B (federal general conformity regulations).

The general conformity regulations apply to those federal actions in non-attainment or maintenance areas where the action's direct and indirect emissions have the potential to emit one or more of the six criteria pollutants at rates equal to or exceeding the prescribed rates.

General conformity de minimis threshold levels for the non-attainment and maintenance areas in New York State are presented in **Table 1**.

Table 1
General Conformity Threshold Levels

Non-Attainment Area and Pollutants	Threshold (tons/year)
ozone, other non-attainment areas inside an ozone transport region:	
volatile organic compounds (VOC)	50
nitrogen oxides (NO_x)	100
carbon monoxide (CO), maintenance areas:	
direct emissions	100
inhalable particulate matter (PM_{10}), nonattainment areas:	
direct emissions	100
fine particulate matter ($PM_{2.5}$), maintenance areas:	
direct emissions	100
SO_2	100

Source: 40 CFR § 93.153(b)

Notes: NO_x and VOCs also limited at 100 tpy in $PM_{2.5}$ maintenance areas, but ozone requirements are stricter.

The general conformity requirements do not apply to federal actions that:

- Do not satisfy either one of the above conditions (where the action's direct and indirect emissions have the potential to emit one or more of the six criteria pollutants at rates

equal to or exceeding the threshold levels above within a non-attainment or maintenance area);

- Occur in an attainment area;
- Are related to transportation plans, programs, and projects developed, funded, or approved under Title 23 U.S.C. or the Federal Transit Act (49 U.S.C. 1601); or
- Qualify for exemptions established at 40 CFR Part 93.153.

The regulation assumes that a proposed federal action whose criteria pollutant emissions have already been included in the local SIP's attainment or maintenance demonstrations conforms to the SIP.

Most construction work would not require a general conformity evaluation, since construction activity in general is included in the SIP estimates, based on past activity levels and assumptions regarding growth in future years. However, there may be projects which are not considered to be included in the SIP if they were beyond the scope of what was anticipated during SIP preparation. If a project is not included in the SIP or there is uncertainty regarding its inclusion, a preliminary evaluation of emissions may be sufficient to demonstrate that the project's emissions would be de minimis under the above general conformity regulations. If that is the case, a detailed conformity analysis and determination would not be required. The following analysis provides a simplified approach to preliminary evaluation, based on construction expenditure.

As a conservative estimate, the analysis below assumes that the emissions intensity per expenditure (tons per dollar) for the project would be similar to the average intensity of the construction sector in the county. This would not be applicable for projects with higher intensity (emissions per dollar) such as large infrastructure projects or intense development projects including substantial excavation and foundations work. Given this and other limitations of this analysis, it is recommended that this approach not be seen as definitive if the results are not clearly de minimis. In such cases, a more refined approach may be needed.

Construction expenditure data is available from the U.S. Census Bureau's 2007 Survey of Business Owners.[1] Since the expenditure data represent firms by their location and not necessarily the location where construction takes place, applying this data at the county level may skew the results in some cases. As a broader estimate, we have categorized the expenditure as 'upstate' and 'downstate', reflecting the higher cost of construction in the downstate area. Downstate counties include Bronx, Kings, Nassau, New York, Orange, Queens, Richmond, Rockland, Suffolk, and Westchester. Total construction expenditure in 2007 was approximately 23.1 billion dollars in the upstate area, and 71.8 billion in the downstate area.

Construction emissions by county for the year 2007 were obtained from the New York State Department of Environmental Conservation (NYSDEC).[2] The fraction each de minimis emissions level represents of total regional emissions was calculated for each pollutant and area (upstate and downstate). The fraction of construction expenditure in each area equivalent to

[1] U.S. Census Bureau. *2007 Survey of Business Owners*, Statistics for All U.S. Firms by Industry, Gender, Ethnicity, and Race for the U.S., States, Metro Areas, Counties, and Places: 2007; SB0700CSA01.

[2] NYSDEC. 2007 SIP data. (provided by DEC, 2014)

those emission fractions were then calculated, representing de minimis project construction expenditures which would be equivalent to de minimis emissions.

For example, the downstate VOC emissions were 2,401.6 tons per year (tpy), and the relevant de minimis VOC emissions are 50 tpy; therefore—

de minimis as fraction of total emissions: $50 \text{ tpy} \div 2{,}401.6 \text{ tpy} = 2.08\%$

de minimis fraction of total expenditure: $2.08\% \times \$71.8 \text{ bn} = \$\mathbf{1.5 \text{ bn}}$

The total SIP emissions by pollutant and region and the resulting average project expenditure equivalent to de minimis levels are presented in **Table 2**.

Table 2
Regional SIP Emissions and de minimis Construction Expenditure

Pollutant	Region	2007 SIP Emissions (tpy)	De Minimis (tpy)	Average Construction De Minimis Expenditure (million $)
VOC	Downstate	2,401.6	50	1,496
	Upstate	1,464.3	50	789
NOx	Downstate	16,332.1	100	440
	Upstate	9,745.2	100	237
CO	Downstate	17,522.1	100	410
	Upstate	11,746.2	100	197
PM_{10}	Downstate	1,489.6	100	4,823
$PM_{2.5}$	Downstate	1,442.3	100	4,981
SO_2	Downstate	1,251.9	100	5,738

Notes: Only relevant pollutants by area are presented; see **Table 3** for details.

Based on the above analysis, projects with projected construction expenditure substantially lower than the average construction de minimis expenditure would clearly not exceed de minimis emissions levels for general conformity purposes. **Table 3** identifies the minimum de minimis expenditure threshold in each county, based on the lowest level for all nonattainment or attainment maintenance areas within which the county is located. For example, New York County is in 4 nonattainment/maintenance areas; of all the pollutants relevant to those areas, the CO de minimis emissions have the lowest corresponding construction expenditure of 410 million dollars. Standard construction projects in Manhattan with construction expenditure substantially lower than 410 million dollars in New York County would not exceed the de minimis level for any of the relevant pollutants and would not require any further analysis or conformity determination. For projects with components in more than one county, use the lowest threshold for all counties (if that exceeds de minimis levels, this can be refined by reviewing all appropriate pollutants based on the nonattainment/maintenance areas identified in **Table 3**, the appropriate pollutant for the area type from **Table 1**, and the de minimis expenditure for each pollutant from **Table 2)**.

Table 3
De Minimis Construction Expenditure Threshold by County

County	Nonattainment / Maintenance Area				Critical Pollutant	De Minimis Expenditure Threshold (million $)
	Ozone	CO	$PM_{2.5}$	PM_{10}		
Upstate:						
Albany	√				NO_x	237
Erie	√				NO_x	237
Genesee	√				NO_x	237
Greene	√				NO_x	237
Livingston	√				NO_x	237
Monroe	√				NO_x	237
Montgomery	√				NO_x	237
Niagara	√				NO_x	237
Onondaga		√			CO	197
Ontario	√				NO_x	237
Orleans	√				NO_x	237
Rensselaer	√				NO_x	237
Saratoga	√				NO_x	237
Schenectady	√				NO_x	237
Schoharie	√				NO_x	237
Wayne	√				NO_x	237
Downstate:						
Bronx	√	√	√		CO	410
Dutchess	√				NO_x	440
Kings	√	√	√		CO	410
Nassau	√	√	√		CO	410
New York	√	√	√	√	CO	410
Orange	√		√		NO_x	440
Putnam	√				NO_x	440
Queens	√	√	√		CO	410
Richmond	√	√	√		CO	410
Rockland	√		√		NO_x	440
Suffolk	√		√		NO_x	440
Westchester	√	√	√		CO	410

✷

General Conformity Worksheet

GENERAL CONFORMITY WORKSHEET

Air Emissions Information

PROJECT NAME _____

LOCATION (COUNTY, STATE)_____

FOR CALENDAR YEAR _____

Estimated Construction Start Date: _____ End Date: _____

A. ON-ROAD VEHICLES

ACTIVITY	VEHICLE TYPE	# OPERATING	ON / OFF SITE	GVWR PER VEHICLE	TOTAL MILES PER VEHICLE	TOTAL MILES ALL VEHICLES
Example: Demolition	Truck	2	ON	33,000	36	72

B. OFF-ROAD VEHICLES

ACTIVITY	EQUIPMENT TYPE	# OPERATING	HORSE-POWER	GAS/ DIESEL	TOTALHRS PER VEHICLE	TOTAL HRS ALL VEHICLES
Example: Site Clearing	Backhoe	3	90	Diesel	80	240

Notes:

1. If construction occurs over more than one calendar year, provide a separate table for each calendar year.
2. For ACTIVITY, include a short description of the type of activity
   - On-Road examples: workers commuting to/from job site, materials deliveries, material movement to site, etc.
   - Off-Road examples: site clearing, demolition, excavation, construction, material placement, etc.
3. For EQUIPMENT
   - On-Road examples: auto, pickup truck (gas or diesel), heavy trucks (gas or diesel), etc.
   - Off-road examples: crane, backhoe, dozer, mixer, chain saw, forklift, etc.
4. Specify whether the on-road vehicles listed are being used for transportation to/from site, or are used exclusively on the site, as this will affect the emission estimates.
5. Specify the Gross Vehicle Weight Ratings for any on-road heavy-dity diesel vehicles, as tehse are necessary to determine the correct emissions factors.
6. For worker commutation, the number of vehicles and miles traveled can be estimated by using any available data to estimate commuting distance, carpool rates, etc., (e.g., Census Journey-to-Work data).

Response to Comment

May 22, 2015

Ms. Grace Musumeci
Chief of the Environmental Review Section
U.S. Environmental Protection Agency
Region 2 Main Regional Office
290 Broadway
New York, NY 10007-1866

RE: CDBG-DR Funding Application, Barnes Avenue Sanitary Sewage Flow Diversion Project

Dear Ms. Musumeci:

On April 29, 2015, the Governor's Office of Storm Recovery (GOSR), operating under the auspices of New York State Homes and Community Renewal's Housing Trust Fund Corporation as responsible entity for direct administration of the HUD Community Development Block Grant – Disaster Recovery (CDBG-DR) program in New York State, issued a Finding of No Significant Impact (FONSI) related to the above-mentioned project. As a part of the FONSI, GOSR requested comments by May 14, 2015. As you are aware, on May 15, 2015, EPA submitted comments on the Environmental Assessment (EA).

The purpose of this letter is to provide EPA with the additional information requested pertaining to the EA comments submitted on May 15, 2015. In all instances GOSR has responded and revised the EA accordingly, as follows:

(1) EPA states: "The cumulative impacts analysis should consider the environmental impacts of past, present and reasonably foreseeable future actions. The project as a whole, and as one of a number of other proposed and/or approved actions (e.g., Downtown Vision & Comprehensive Development Plan for The Village of Hempstead, Nassau County). In the area that would have the potential to impact the same resources (e.g., amount of pervious surface)." *The cumulative impact section of the EA has been revised accordingly.*

(2) EPA States: "Stormwater issues should be discussed. The area encounters sewer problems during periods of heavy rainfall." *The purpose and need section of the EA has been revised accordingly. The purpose and need of the project is to address vulnerabilities and capacity limitation that have led to sanitary sewer overflows in the Barnes Avenue area of Nassau County. In this area stormwater is managed by a separate stormwater conveyance. Although rain events typically contribute to a rise in the water table, which in turn can exacerbate inflow and infiltration, the sanitary sewers are the main focus of this project.*

(3) EPA States: "EPA understands the purpose and need of providing safe and adequate sewer service in order to alleviate future SSO events. However, there is an additional challenge in ensuring adequate and resilient measures in light of the severity of more frequent storms." *Comment noted.*

(4) EPA States: "As this program is Federally funded, it must comply with the New York State air quality implementation plan and therefore requires a general conformity applicability analysis in accordance with 40 CFR 93 Subpart B for any portion of the program that would fall within a nonattainment or maintenance area. The analysis should be completed prior to the start of any work, include all direct emissions that would be anticipated from demolition/construction/renovation activities, and be based on the best planning assumptions available at the time of the analysis. All assumptions and calculations should be presented. If emissions are estimated to be greater than the de minimis levels listed in 40 CFR 93.153(b) for any pollutant or precursor, then a full conformity determination would be required." *After discussion with Maria Clark and Matt Laurita of your office we have revised the EA to clarify how this provision is being adhered to.*

(5) EPA States: "Given the overall amount of construction that may be occurring in Nassau County, we strongly recommended implementation of the following Clean Diesel Program measures: (1) Strategies and technologies that reduce unnecessary idling, including auxiliary power units, the use of electric equipment, and strict enforcement of idling limits; and (2) Use of clean diesel through add-on control technologies like diesel particulate filters and diesel oxidation catalysts, repowers, or newer, cleaner equipment." *We have incorporated this recommended mitigation into the EA.*

(6) EPA States: "It is not clear whether consideration was given to the installation of high efficiency pumps which have an improved power factor and of variable frequency drives (VFDs) on the pumps to reduce energy consumption. If the pumps receive variable flows throughout a 24-hour cycle then, they are well suited for VFDs. VFDs can increase system energy efficiency by providing a means to reduce the motor speed of variable torque loads. The energy savings by using VFDs on two five-horsepower pumps running for eight hours a day is estimated at $912 annually. The capital cost for the VFDs is $45,000." *The proposed Hempstead Wastewater Pumping Station pumping units will be equipped with VFD's to increase system energy efficiency.*

(7) EPA States: "EPA wants to make you aware that there are two new rules for new source engines. One of these rules applies to the new generator(s) this project is proposing." *We have incorporated these requirements into the EA.*

We trust that this will satisfy EPA's May 15, 2015 comments related to the above-mentioned EA. If you or your staff have any questions please do not hesitate to contact me via email at Thomas.King@stormrecovery.ny.gov or by phone at (518) 473-0015.

Sincerely,

Thomas J. King
Assistant General Counsel